Hallandale Oasis

1100 E. Hallandale Beach Boulevard
Hallandale Beach, Florida

TRAFFIC IMPACT STUDY

prepared for:
Szauer Engineering, Inc.

KBP CONSULTING, INC.

October 2015
Updated December 2015

Hallandale Oasis

1100 E. Hallandale Beach Boulevard

Hallandale Beach, Florida

Traffic Impact Study

October 2015
Updated December 2015

Prepared for:
Szauer Engineering, Inc.
7050 W. Palmetto Park Road, No. 15399
Boca Raton, FL 33433

Prepared by:
KBP Consulting, Inc.
8400 N. University Drive, Suite 309
Tamarac, Florida 33321
Phone: (954) 560-7103

KARL B. PETERSON
LICENSE
No. 49897
STATE OF
FLORIDA
PROFESSIONAL ENGINEER
12/10/15

Karl B. Peterson, P.E.
Florida Registration Number 49897
KBP Consulting, Inc.
8400 N. University Drive, Suite 309
Tamarac, Florida 33321
CA # 29939

TABLE OF CONTENTS

INTRODUCTION 1

INVENTORY 3
Existing Land Uses and Access 3
Proposed Land Uses and Access 3

EXISTING CONDITIONS 4
Roadway System 4
Intersections 4
Transit Service and Facilities 5

TRAFFIC COUNTS 7

TRIP GENERATION 9

TRIP DISTRIBUTION AND TRAFFIC ASSIGNMENT 12

TRAFFIC ANALYSES 16
Future Conditions Traffic Volumes 16
Primary Intersections – Level of Service (LOS) Analyses 21
Secondary Intersections – Project Traffic Impacts 22
Link Analyses 22

SUMMARY & CONCLUSIONS 24

LIST OF FIGURES

FIGURE 1 – Project Location Map 2
FIGURE 2 – Existing Lane Geometry 6
FIGURE 3 – Existing Traffic Counts (January and April 2015) 8
FIGURE 4 – Trip Distribution and Project Traffic Assignment – Primary Intersections 12
FIGURE 5 – Trip Distribution and Project Traffic Assignment – Secondary Intersections 13
FIGURE 6 – Driveway Assignment 14
FIGURE 7 – Future (2020) Background Traffic Volumes 18
FIGURE 8 – Future (2020) Total Traffic Volumes 19
FIGURE 9 – Future (2020) Driveway Volumes 20

LIST OF TABLES

TABLE 1 – Trip Generation Summary 11
TABLE 2 – Primary Intersections – Levels of Service 21
TABLE 3 – Secondary Intersections – Project Traffic Impacts 22
TABLE 4 – Link Analyses – AM Peak Hour 23
TABLE 5 – Link Analyses – PM Peak Hour 23

Appendices

INTRODUCTION

The Hallandale Oasis is a proposed mixed-use development to be located on the south side of E. Hallandale Beach Boulevard (State Road 858) in the City of Hallandale Beach, Broward County, Florida. More specifically, the site is located approximately 1,250 feet to the east of Federal Highway (State Road 5 / US 1). The location of the project site is illustrated in Figure 1 on the following page.

KBP Consulting, Inc. has been retained by Szauer Engineering, Inc. to conduct a traffic impact study in connection with the development of this mixed-use project.[1] This study addresses the trip generation, site access, and the traffic impacts created by the proposed project on the nearby transportation network. This study is divided into seven (7) sections, as listed below:

1. Inventory
2. Existing Conditions
3. Traffic Counts
4. Trip Generation
5. Trip Distribution and Traffic Assignment
6. Traffic Analyses
7. Summary & Conclusions

[1] The methodology for this traffic impact study was developed based upon input received from City of Hallandale Beach staff and their consultant, Michael Miller Planning Associates, Inc. The final methodology is presented in Appendix A of this report.

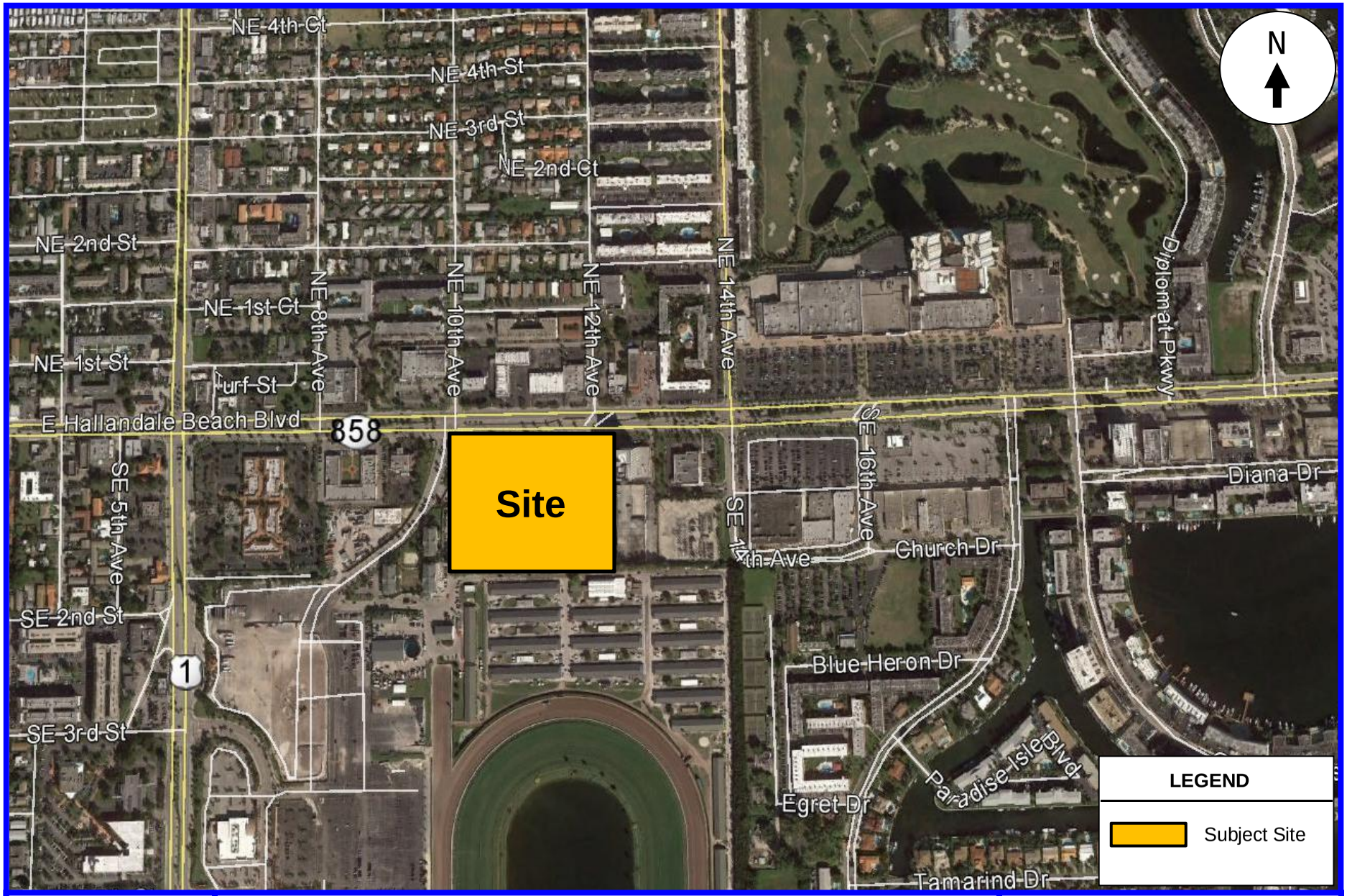

KBP
CONSULTING, INC.

Project Location Map

FIGURE 1
Hallandale Oasis
Hallandale Beach, Florida

INVENTORY

Existing Land Uses and Access

The subject site is comprised of two (2) lots. The easternmost lot (Lot 1) is 5.28 acres while the westernmost lot (Lot 2) is 4.80 acres. The total area of for the site is 10.08 acres. The site for the Hallandale Oasis project is currently developed with the following uses:

- **Lot 1 (Easternmost Lot)**
  - 44,395 square feet of office space
  - 6,250 square foot fitness center
- **Lot 2 (Westernmost Lot)**
  - 20,485 square feet of office space
  - 5,000 square foot drive-in bank

Vehicular access to Lot 1 from E. Hallandale Beach Boulevard is provided by one (1) right-turn in / right-turn out only driveway and one (1) right-turn in / right-turn out / left-turn in only driveway. Vehicular access to Lot 2 is provided by two (2) right-turn in / right-turn out only driveways located on E. Hallandale Beach Boulevard.

Proposed Land Uses and Access

The Hallandale Oasis project is proposed to consist of the following elements:

- 500 High-Rise Residential Apartment Dwelling Units
- Hotel with 200 Guest Rooms
- 59,631 Square Feet of Office Space
- 26,489 Square Feet of Specialty Retail Space
- 7,340 Square Feet of Quality Restaurant Space
- Structured Parking with 1,691 Parking Spaces

Access along E. Hallandale Beach Boulevard will be provided by one (1) right-turn in / right-turn out only driveway and one (1) right-turn in / right-turn out / left-turn in driveway. (Please see the FDOT approval letter in Appendix B.) In addition, two (2) driveways are proposed at the rear (south end) of the site that will provide connections to a future / planned roadway (SE 2nd Street / Hibiscus Street). The proposed project is anticipated to be built and occupied by 2020. Appendix C contains the proposed site plan for the Hallandale Oasis project.

EXISTING CONDITIONS

This section of the report addresses the transportation system located in the vicinity of the Hallandale Oasis site.

Roadway System

The primary roadway system included in this study located in the immediate vicinity of the project includes two (2) major roadways (E. Hallandale Beach Boulevard and US 1 / Federal Highway), one (1) County collector roadway (Dixie Highway / SE-NE 1st Avenue), five (5) City Collector roadways (Atlantic Shores Boulevard, SE 3rd Street, NE 8th Avenue, NE 10th Avenue, and NE 14th Avenue) and three (3) local streets (NE 3rd Street, Hibiscus Street and Gulfstream Way). Gulfstream Way, which adjoins the subject site on its western boundary, is actually a privately-owned roadway for the Gulfstream Park pari-mutuel horse racing facility.

E. Hallandale Beach Boulevard is a six-lane divided principal state arterial roadway oriented in the east-west direction with a posted speed limit of 35 miles per hour (mph) in the vicinity of the subject site. This facility provides local and regional connectivity by way of SR A1A to the east and I-95 to the west. Federal Highway (US 1) is a principal state arterial roadway with a posted speed limit of 45 mph south of Hallandale Beach Boulevard and 35 mph north of Hallandale Beach Boulevard. US 1 provides three through lanes in each direction, south of Hallandale Beach Boulevard and becomes a four-lane roadway about 450 feet north of Hallandale Beach Boulevard.

Gulfstream Way, a private roadway, is located to the west of the site. Gulfstream Way provides access to the Gulfstream Park pari-mutuel horse racing track and the Village of Gulfstream Park DRI development located generally in the southeast corner of the intersection at US 1 and Hallandale Beach Boulevard. NE 10th Avenue, on the other hand, is a City Collector roadway that provides access to the residential community to the north of Hallandale Beach Boulevard. NE 12th Avenue is a similar local roadway. NE/SE 14th Avenue is a City Collector roadway located about 600 feet to the east of the site and is oriented in the north-south direction.

Study Intersections

For purposes of this study, the following seven (7) primary intersections were selected for detailed analysis purposes. These intersections are:

- Hallandale Beach Boulevard and Dixie Highway / NE 1st Avenue
- Hallandale Beach Boulevard and US 1 / Federal Highway
- Hallandale Beach Boulevard and NE 8th Avenue
- Hallandale Beach Boulevard and Gulfstream Way / NE 10th Avenue
- Hallandale Beach Boulevard and NE 14th Avenue
- US 1 and SE 3rd Street
- US 1 and NE 3rd Street

Figure 2 depicts the number of lanes on the roadways located within the study area of the proposed project. The geometry of the intersections selected for detailed analysis purposes are also illustrated in this figure. Additionally, the project's traffic impacts (with no Level of Service analyses) have been documented at the following nine (9) secondary intersections:

- Hallandale Beach Boulevard and NW 6th Avenue
- Hallandale Beach Boulevard and NW 4th Avenue
- Hallandale Beach Boulevard and Layne Boulevard
- Hallandale Beach Boulevard and Golden Isles Drive
- Hallandale Beach Boulevard and Diplomat Parkway
- Hallandale Beach Boulevard and Three Islands Boulevard
- US 1 and SE 9th Street
- US 1 and Atlantic Shores
- US 1 and Pembroke Road

Transit Service and Facilities

Two (2) Broward County Transit routes serve the project site. These routes include:

- Route 4: East and west along E. Hallandale Beach Boulevard between NE 14th Avenue and State Road A1A
- Route 28: East and west along E. Hallandale Beach Boulevard

There are four (4) bus stops located in the immediate vicinity of the Oasis site. These stops are located generally between NE 10th Avenue and NE 12th Avenue with two (2) stops on the north side of E. Hallandale Beach Boulevard and two (2) located on the south side.

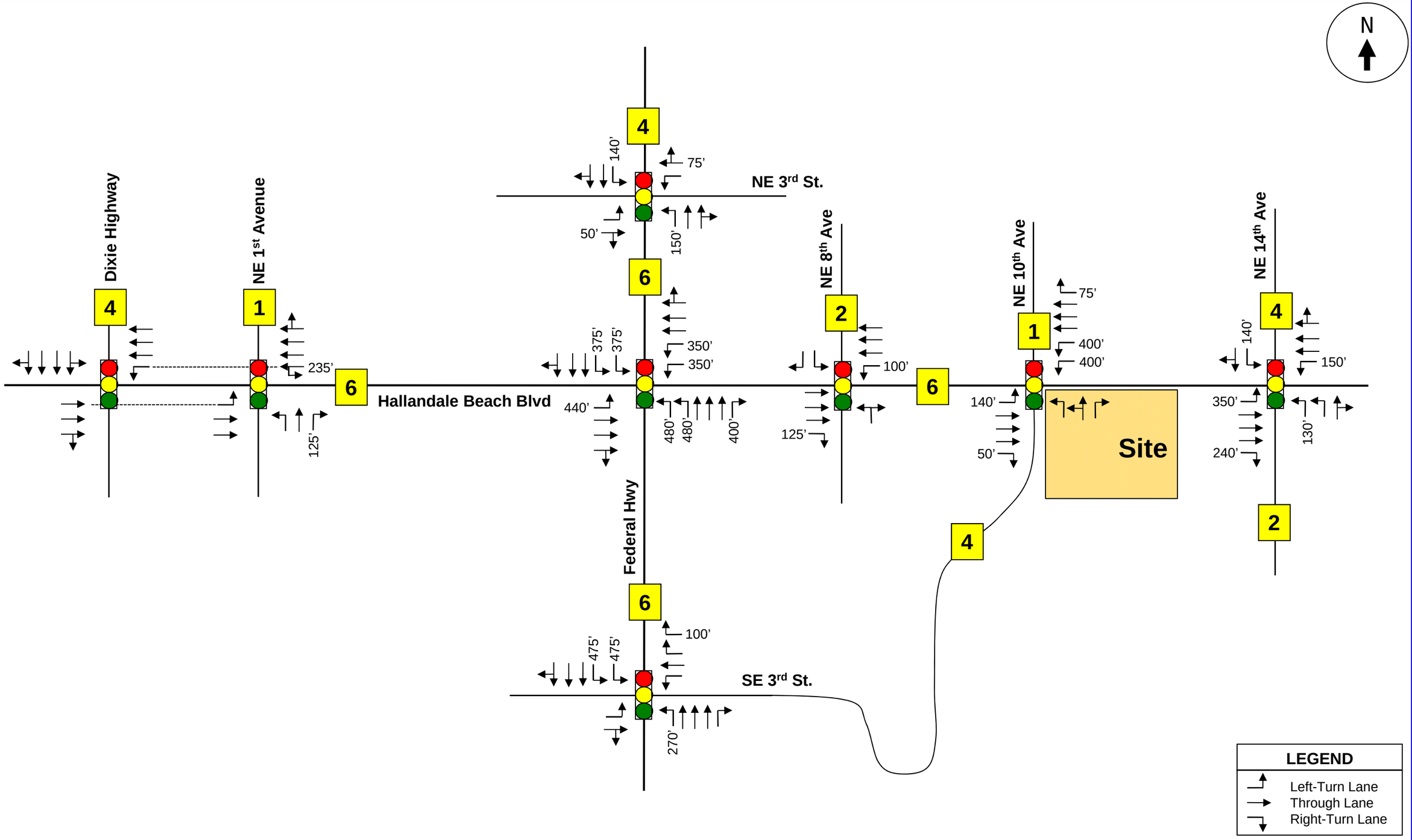

KBP
CONSULTING, INC.

Existing Lane Geometry

FIGURE 2
Hallandale Oasis
Hallandale Beach, Florida

TRAFFIC COUNTS

Traffic counts for each of the study intersections was previously collected as part of the various traffic impact studies prepared for several nearby projects. This information was made available by the City of Hallandale Beach. AM peak period traffic data was collected between 7:00 AM and 9:00 AM while the PM peak period traffic data was collected between 4:00 PM and 6:00 PM. This traffic count data, which was collected in 2015, is summarized in Figure 3 on the following page and presented in detail in Appendix D.

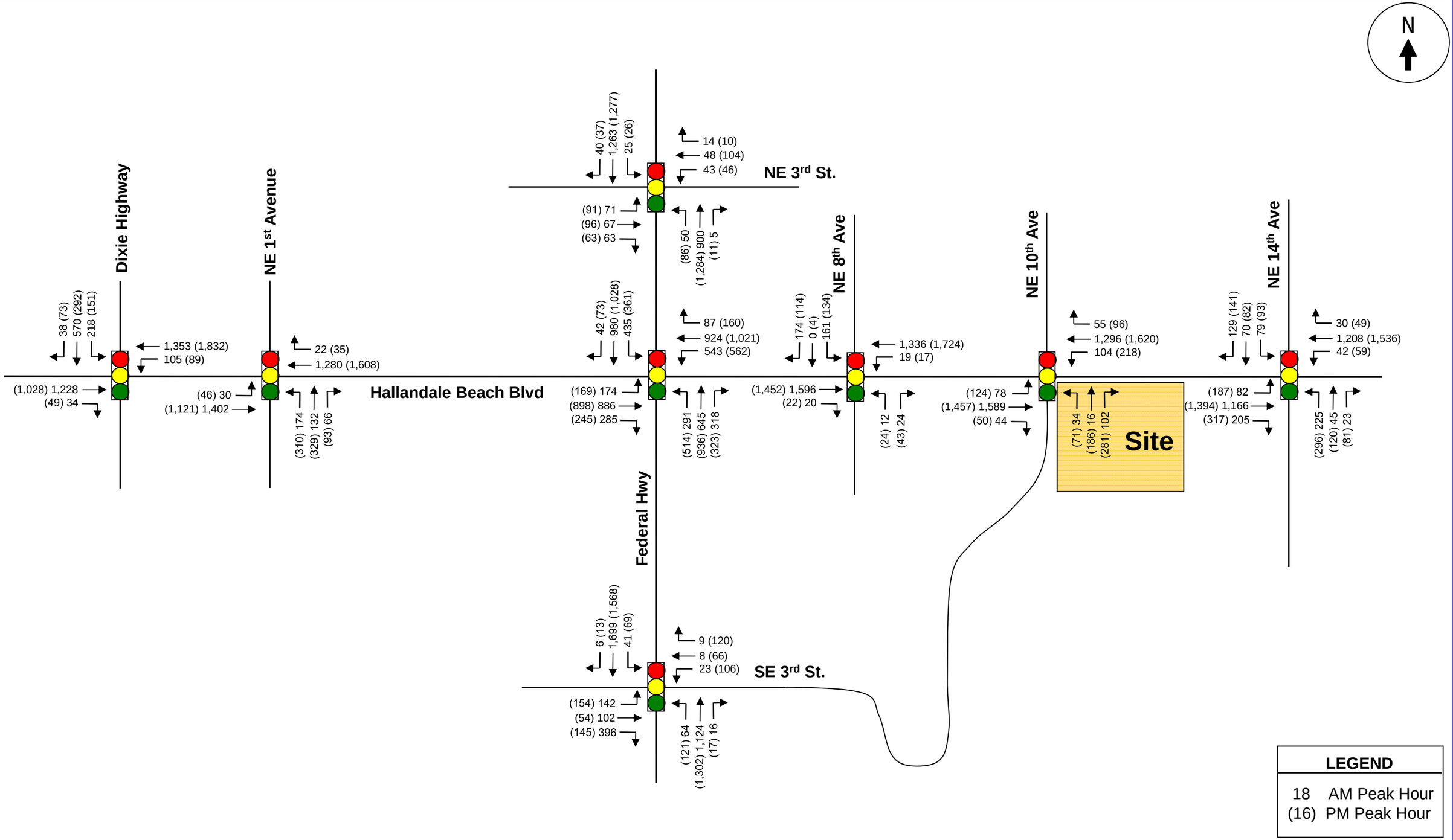

KBP
CONSULTING, INC.

Existing Intersection Turning Movement Counts
(January and April 2015)

FIGURE 3
Hallandale Oasis
Hallandale Beach, Florida

TRIP GENERATION

The trip generation analysis for the Hallandale Oasis project was based upon information contained in the Institute of Transportation Engineer's (ITE) *Trip Generation Manual (9th Edition).* According to the subject ITE manual, the most appropriate land use categories for the existing and proposed development are Land Use #710 – General Office Building, Land Use #826 – Specialty Retail Center, Land Use #492 – Health / Fitness Club, and Land Use #222 – High-Rise Apartment, Land Use #912 – Drive-In Bank, Land Use #931 – Quality Restaurant, and Land Use #310 – Hotel. The trip generation rates and equations used to determine the vehicle trips associated with this analysis are presented below.

ITE Land Use #710 – General Office Building

- Weekday: Ln(T) = 0.76 Ln(X) + 3.68
  where T = number of trips and X = 1,000 square feet of gross floor area
- AM Peak: Ln(T) = 0.80 Ln(X) + 1.57 (88% in / 12% out)
- PM Peak: T = 1.12 (X) + 78.45 (17% in / 83% out)

ITE Land Use #826 – Specialty Retail Center

- Weekday: T = 44.32 (X)
  where T = number of trips and X = 1,000 square feet of gross leasable area
- PM Peak: T = 2.71 (X) (44% in / 56% out)
  - Pass-By = 34%

ITE Land Use #492 – Health / Fitness Club

- Weekday: T = 32.93 (X)
  where T = number of trips and X = 1,000 square feet of gross floor area
- AM Peak: T = 1.41 (X) (50% in / 50% out)
- PM Peak: Ln(T) = 0.95 Ln(X) + 1.43 (57% in / 43% out)

ITE Land Use #222 – High-Rise Apartment

- Weekday: Ln (T) = 0.83 Ln (X) + 2.50
  where T = number of trips and X = number of dwelling units
- AM Peak: Ln(T) = 0.99 Ln (X) - 1.14 (25% in / 75% out)
- PM Peak: T = 0.32 (X) + 12.30 (61% in / 39% out)

ITE Land Use #912 – Drive-in Bank

- Weekday: T = 148.15 (X)
  where T = number of trips and X = 1,000 square feet of gross floor area
- AM Peak: T = 12.08 (X) (57% in / 43% out)
- PM Peak: T = 24.30 (X) (50% in / 50% out)
  - Pass-By = 47%

ITE Land Use #931 – Quality Restaurant

- Weekday: T = 89.95 (X)
  where T = number of trips and X = 1,000 square feet of gross floor area
- AM Peak: T = 0.81 (X) (50% in / 50% out)
- PM Peak: T = 7.49 (X) (67% in / 33% out)

ITE Land Use #310 – Hotel

- Weekday: T = 8.95 (X) – 373.16
  where T = number of trips and X = number of rooms
- AM Peak: T = 0.53 (X) (59% in / 41% out)
- PM Peak: T = 0.60 (X) (51% in / 49% out)

Table 1 on the following page summarizes the vehicle trips associated with the proposed Hallandale Oasis project in the City of Hallandale Beach. "Pass-by" percentages reflect the amount of traffic attributed to a specific land use that is already on the adjacent street network for another primary trip purpose. Internalization, or the interaction between land uses as it relates to traffic, is also documented in this analysis in accordance with ITE procedures. The results of these analyses are presented in Appendix E.)

As indicated in Table 1, the net new external vehicle trips anticipated to be generated by the proposed Hallandale Oasis project consists of approximately 3,961 vehicle trips during a typical weekday, 205 vehicle trips during the weekday AM peak hour (70 inbound and 135 outbound), and 241 vehicle trips during the weekday PM peak hour (150 inbound and 91 outbound).

Table 1
Trip Generation Summary
Hallandale Oasis - Hallandale Beach, Florida

Land Use	Size	Daily Trips	AM Peak Hour Trips			PM Peak Hour Trips		
			In	Out	Total	In	Out	Total
Existing Development								
Office	64,880 SF	945	119	16	135	26	125	151
Fitness Center	6,250 SF	206	5	4	9	14	10	24
Drive-in Bank	5,000 SF	741	34	26	60	61	61	122
- Pass-By (Bank - 47%)		-348	-16	-12	-28	-29	-28	-57
Total		**1,544**	**142**	**34**	**176**	**72**	**168**	**240**
Proposed Development								
Office	59,631 SF	886	112	15	127	25	120	145
Specialty Retail	26,489 SF	1,174	0	0	0	32	40	72
- Pass-By (Retail - 34%)		-399	0	0	0	-11	-13	-24
Quality Restaurant	7,340 SF	660	3	3	6	37	18	55
Hotel	200 Rooms	1,417	63	43	106	61	59	120
Residential	500 DU	2,118	38	112	150	105	67	172
Sub-Total		**5,856**	**216**	**173**	**389**	**249**	**291**	**540**
Deductions								
Internalization (2%/11%)		-351	-4	-4	-8	-27	-32	-59
Total		**5,505**	**212**	**169**	**381**	**222**	**259**	**481**
Difference (Proposed - Existing)		**3,961**	**70**	**135**	**205**	**150**	**91**	**241**

Source: KBP Consulting, Inc., December 2015.
Institute of Transportation Engineers (ITE) Trip Generation Manual (9th Edition).

TRIP DISTRIBUTION AND TRAFFIC ASSIGNMENT

The trip distribution and traffic assignment for the Hallandale Oasis project was developed based upon knowledge of the study area, examination of the surrounding roadway network characteristics, review of current traffic volumes and existing land use patterns, and input from the City's traffic engineering consultants (relative to previous analyses conducted for this site in 2014). Figure 4 and 5 on the following pages depict the anticipated trip distribution and peak hour trip assignment for the project. Figure 6 presents the projected driveway volumes.

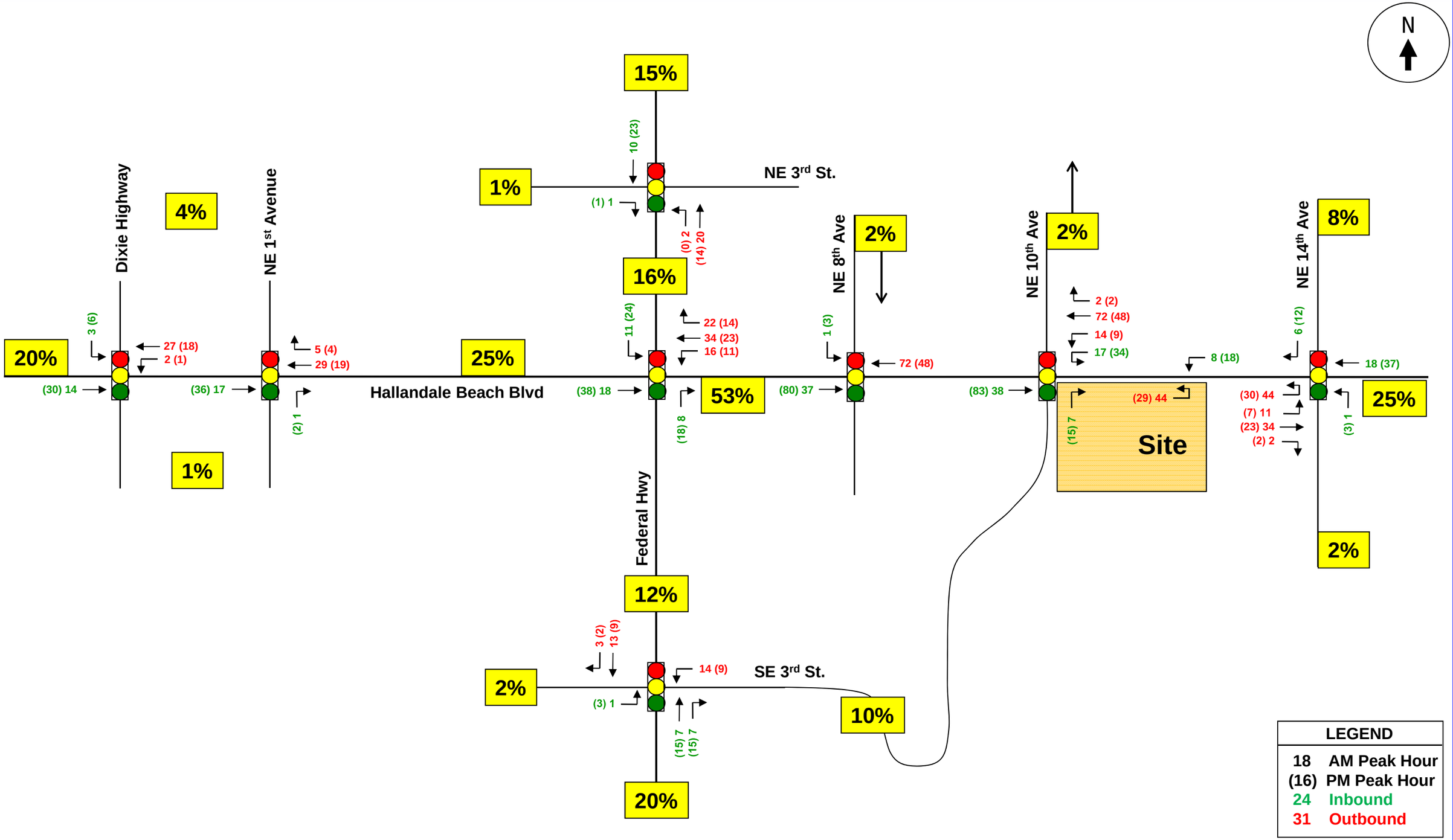

KBP
CONSULTING, INC.

Project Traffic Assignment – External Trips
Primary Study Intersections

FIGURE 4
Hallandale Oasis
Hallandale Beach, Florida

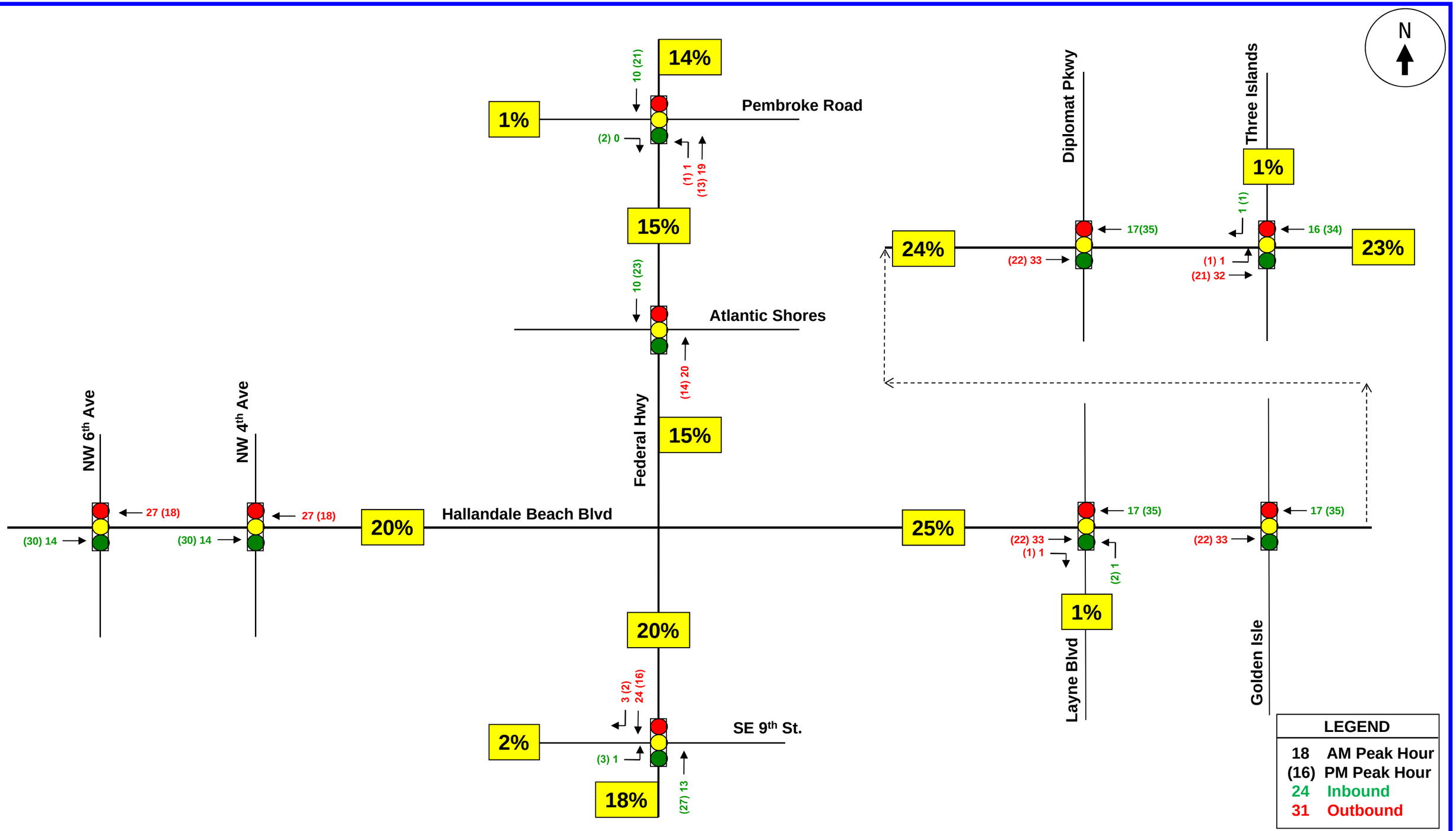

KBP
CONSULTING, INC.

Project Traffic Assignment – External Trips
Secondary Study Intersections

FIGURE 5
Hallandale Oasis
Hallandale Beach, Florida

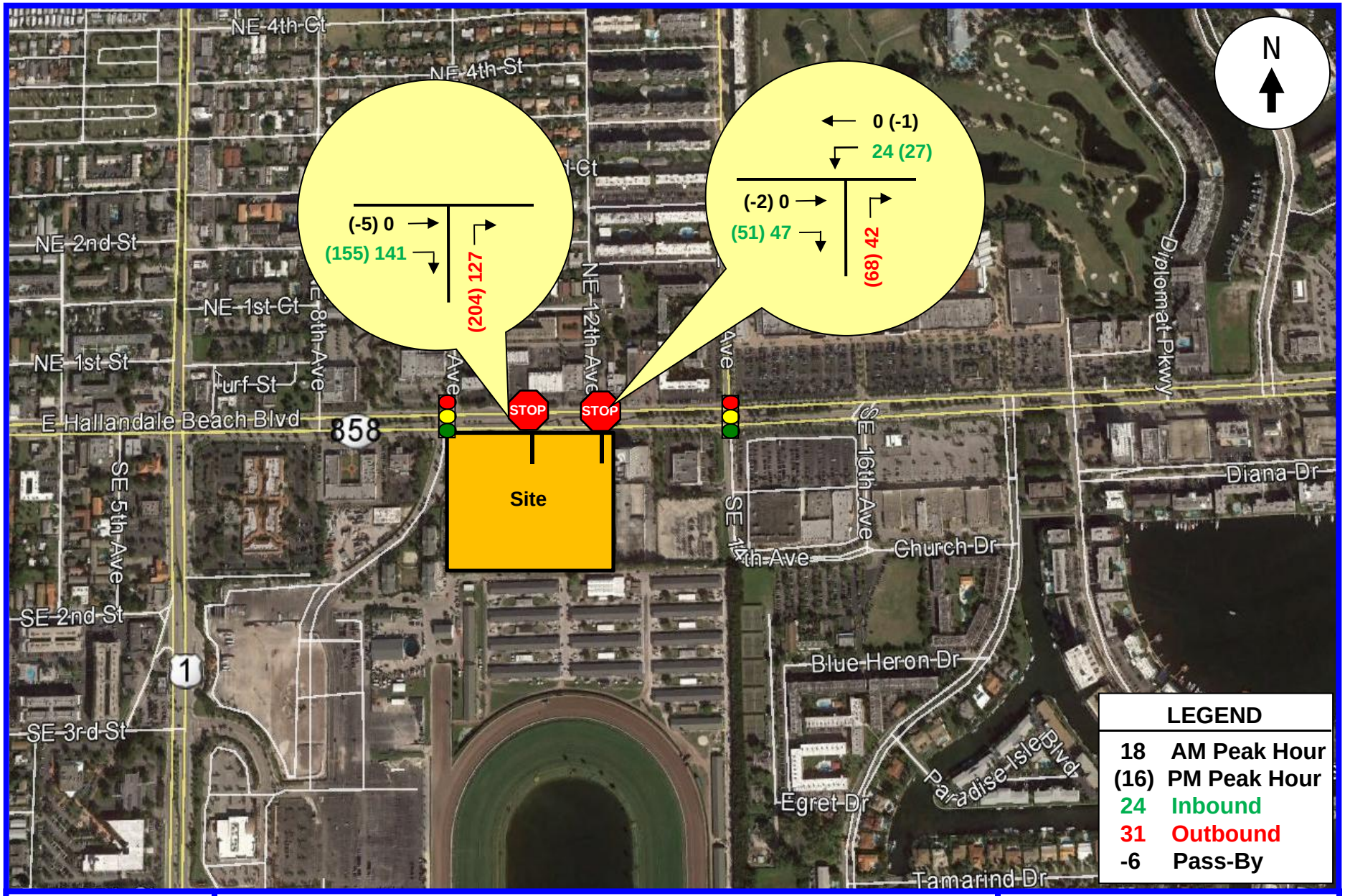

KBP
CONSULTING, INC.

Driveway Traffic Assignment

FIGURE 6
Hallandale Oasis
Hallandale Beach, Florida

TRAFFIC ANALYSES

This section of the study is divided into four (4) parts. The first part of this section involves the development of the future (2020) traffic volumes for the study area. The second part includes level-of-service analyses for existing and future conditions at the study area's primary intersections. The third section focuses on the project impacts (i.e. no level of service analyses) for the study area's secondary intersections. The fourth part of this section considers the link analyses for the study area.

Future Conditions Traffic Volumes

Future, build-out year (2020) traffic volumes were developed for the project study area in the following manner:

- **Average Peak Season Conversion Factor:** Traffic data collected on Wednesday, January 21, 2015 and on Wednesday, April 15, 2015 was reviewed with respect to average peak season conditions. Based on FDOT's Peak Season Factor Category report (see Appendix F), the adjustment factors are as follows:
  - **East Broward County – State Road A1A to US 1**
    - January 21st = 1.06
    - April 15th = 1.03
  - **Central Broward County – West of US 1 to State Road 7**
    - January 21st = 1.03
    - April 15th = 1.01

- **Historic Growth:** The Florida Department of Transportation (FDOT) maintains a traffic count station (#865029) on Hallandale Beach Boulevard just east of Federal Highway (US 1 / State Road 5). The Annual Average Daily Traffic Volumes for this count station for the past five (5) years have exhibited a significant decline. (The data from FDOT is presented in Appendix G.) In order to present a conservative (or "worst-case") scenario for this analysis, an annual growth rate of 1.0% has been applied to account for future background traffic growth within the project study area.

- **Committed Development:** Based upon input received from the City of Hallandale Beach, there are four (4) projects within the immediate area of influence of this project. These projects are:

  - Village at Gulfstream / Gulfstream Park
  - 7th Avenue Village (Hallandale Beach Retail)
  - Hallandale ArtSquare
  - Gulfstream Point

  The project traffic associated with these projects has been accounted for within the project study area for the Hallandale Oasis project. Relevant excerpts from the traffic impact studies for these projects are included in Appendix H.

The future traffic calculations (peak season adjustments, background traffic growth, committed project traffic, and the traffic associated with the proposed Hallandale Oasis project) for the study intersections are contained in Appendix I in tabular format.

Figures 7 and 8 present the future traffic volumes for the study area. Figure 7 includes future background traffic only (without the proposed project) and Figure 8 includes the additional traffic anticipated to be generated by the Hallandale Oasis project. Figure 9 presents the future driveway volumes at both driveways on Hallandale Beach Boulevard.

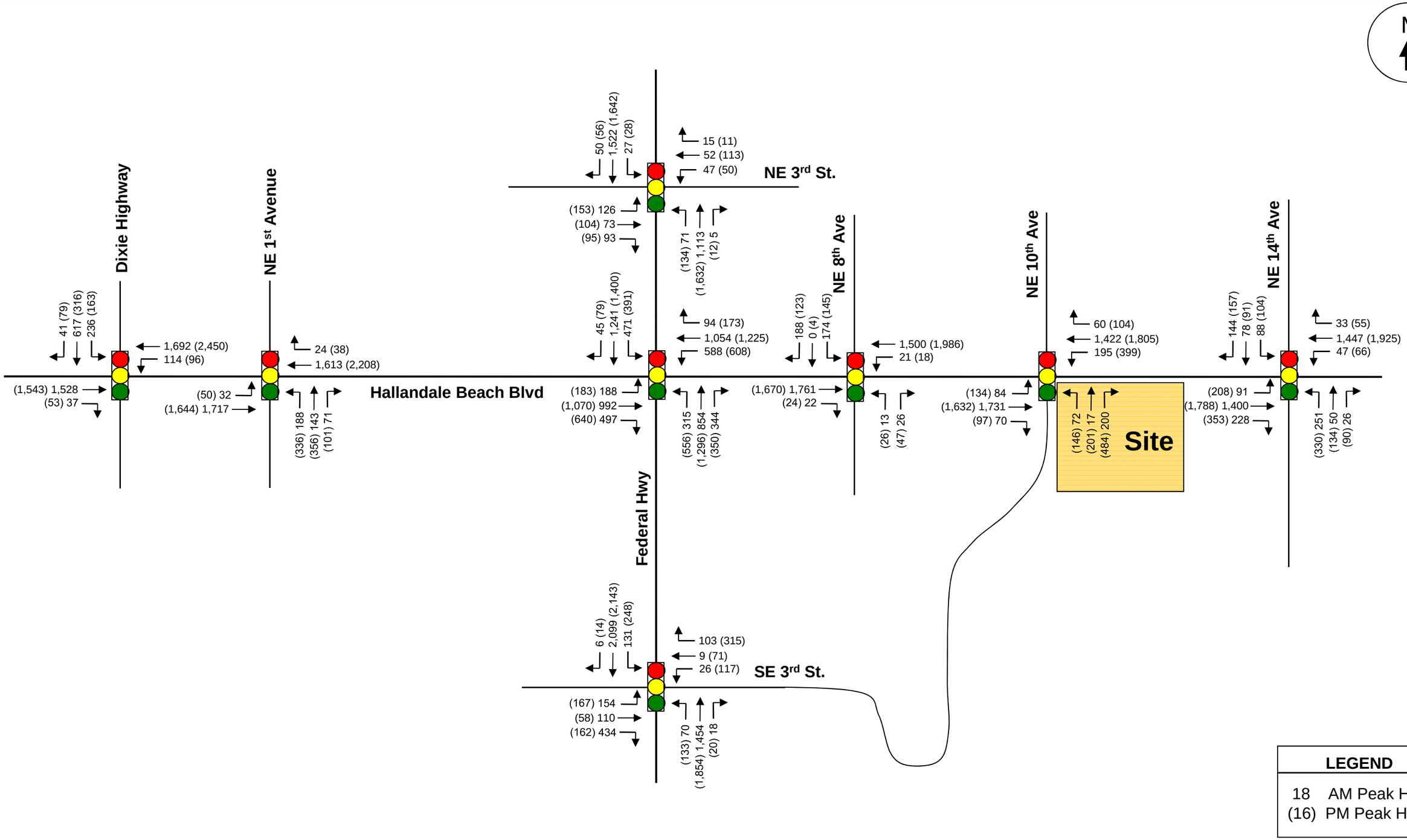

KBP
CONSULTING, INC.

Future (2020) Background (w/out Project) Traffic Volumes

FIGURE 7
Hallandale Oasis
Hallandale Beach, Florida

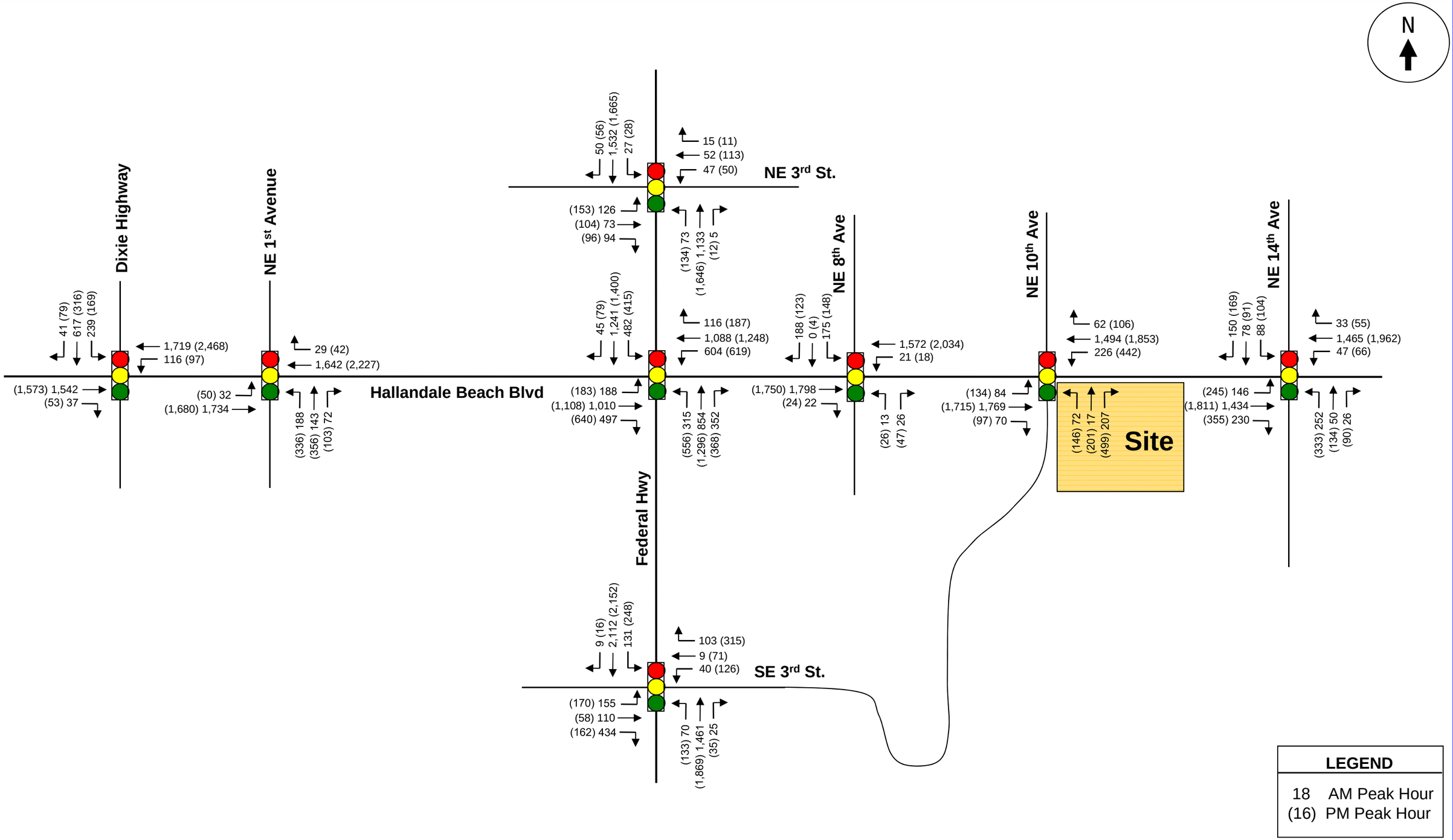

KBP
CONSULTING, INC.

Future (2020) Total (with Project) Traffic Volumes

FIGURE 8
Hallandale Oasis
Hallandale Beach, Florida

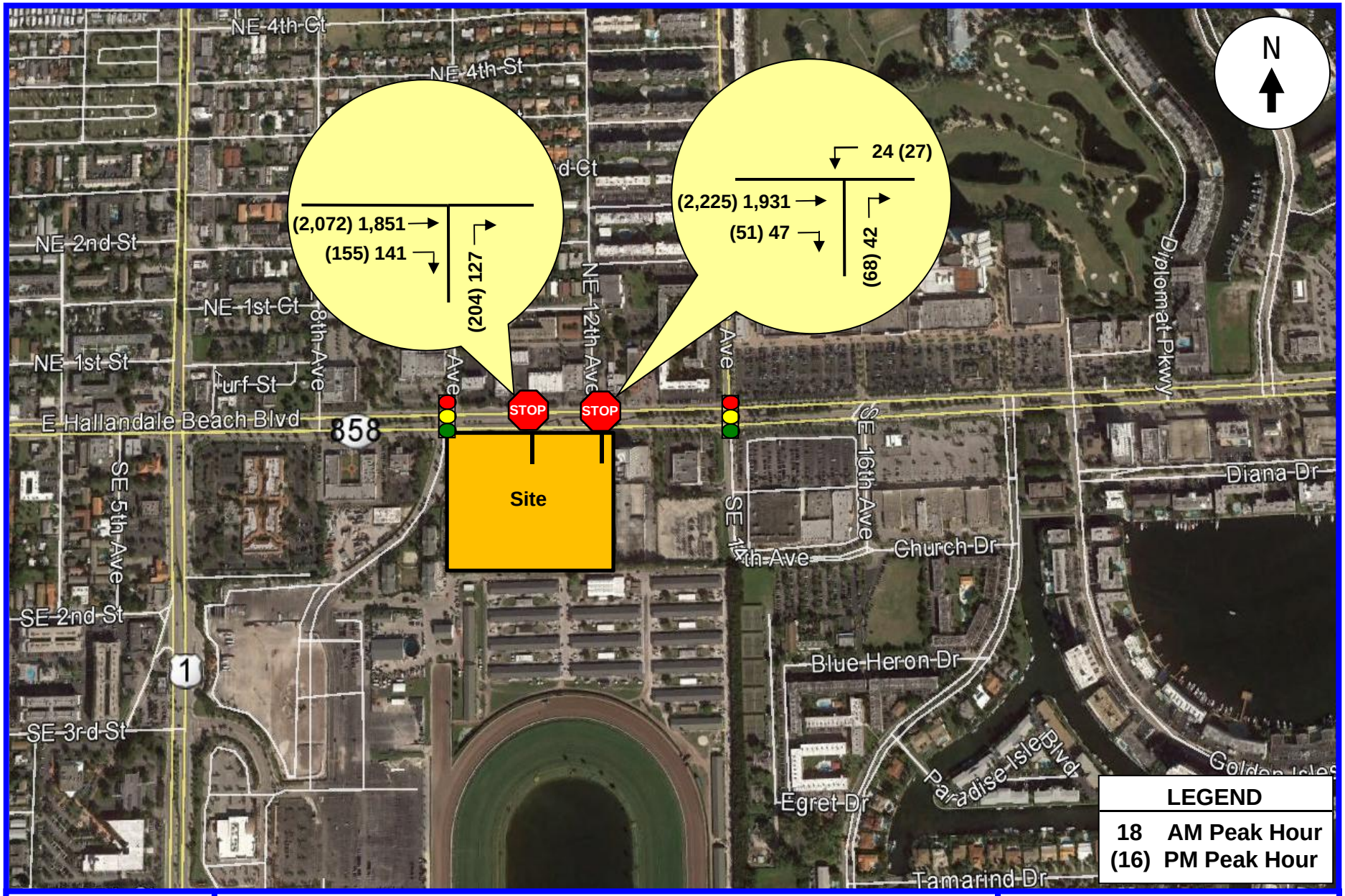

KBP
CONSULTING, INC.

Future (2020) Driveway Traffic Volumes

FIGURE 9
Hallandale Oasis
Hallandale Beach, Florida

Primary Intersections – Level of Service (LOS) Analyses

Intersection capacity/level of service (LOS) analyses were conducted for the primary study intersections and project driveways. These analyses were undertaken following the capacity / level of service procedures outlined in the Highway Capacity Manual (HCM) using the SYNCHRO software for the signalized and unsignalized intersections. The results of these capacity analyses are summarized in Table 2 below. The signal timing data from Broward County Traffic Engineering Division is presented in Appendix J and the SYNCHRO printouts of the intersection capacity analyses are contained in Appendix K.

Table 2
Primary Intersections - Levels of Service
Hallandale Oasis - Hallandale Beach, Florida

	Existing (2015) Conditions		Future (2020) Conditions Without Project Traffic		Future (2020) Conditions With Project Traffic	
Intersection	**AM Peak Hour**	**PM Peak Hour**	**AM Peak Hour**	**PM Peak Hour**	**AM Peak Hour**	**PM Peak Hour**
Dixie Hwy & Hallandale Beach Blvd *	C (26.8)	B (18.1)	C (23.7)	B (17.1)	C (23.5)	B (17.3)
NE 1st Ave & Hallandale Beach Blvd *	C (21.9)	C (27.5)	B (17.2)	C (26.8)	B (17.2)	C (27.0)
Federal Hwy & Hallandale Beach Blvd *	E (75.0)	E (77.1)	F (97.8)	F (129.1)	F (101.0)	F (135.3)
NE 8th Ave & Hallandale Beach Blvd *	C (25.8)	B (18.5)	C (26.8)	B (19.7)	C (27.1)	B (19.7)
NE 10th Ave & Hallandale Beach Blvd *	C (24.8)	C (33.9)	C (35.0)	E (57.5)	D (35.7)	E (64.9)
NE 14th Ave & Hallandale Beach Blvd *	D (52.5)	E (68.1)	E (59.0)	F (111.4)	E (63.0)	F (121.9)
NE 3rd St & Federal Hwy *	B (14.0)	B (16.7)	B (17.2)	C (25.1)	B (17.3)	C (25.6)
SE 3rd St & Federal Hwy *	E (60.5)	D (38.2)	E (78.0)	E (66.6)	E (78.5)	E (67.3)
W. Driveway & Hallandale Beach Blvd **	--	--	--	--	B (13.4)	B (12.9)
E. Driveway & Hallandale Beach Blvd **	--	--	--	--	B (12.6)	B (14.1)

Source: Highway Capacity Manual and SYNCHRO.
Legend: C (21.4) = LOS (Average Delay in Seconds / Vehicle)
* At stop-control intersections, the LOS for the critical approach is documented in this table.
** At signalized intersections, the LOS for the intersection as a whole is documented in this table.

Secondary Intersections – Project Traffic Impacts

The project traffic impacts (volumes and volume-to-capacity percentages) at the study intersections located outside of the project's major influence area are summarized in Table 3 below. As indicated in this table, the project traffic impacts are considered minimal when compared with the roadway's capacity.

Table 3
Secondary Intersections - Project Traffic Impacts
Hallandale Oasis - Hallandale Beach, Florida

	AM Peak Hour		PM Peak Hour	
Intersection	**Project Trips**	**% of Capacity**	**Project Trips**	**% of Capacity**
NW 6th Ave & Hallandale Beach Blvd	41	0.8%	48	0.9%
NW 4th Ave & Hallandale Beach Blvd	41	0.8%	48	0.9%
Layne Blvd & Hallandale Beach Blvd	52	1.2%	60	1.3%
Golden Isles Dr & Hallandale Beach Blvd	50	1.1%	57	1.3%
Diplomat Pkwy & Hallandale Beach Blvd	50	1.1%	57	1.3%
Three Islands & Hallandale Beach Blvd	50	1.1%	57	1.3%
SE 9th St & Federal Hwy	41	0.8%	48	0.9%
Atlantic Shores & Federal Hwy	30	1.0%	37	1.3%
Pembroke Road & Federal Hwy	30	1.0%	37	1.3%

Source: Project traffic volumes are presented graphically in Figure 5. Capacities published by Broward County.
Hallandale Beach Boulevard - State Signalized Arterial - Class I west of Dixie Highway and Class II east of Dixie Highway
Federal Highway - State Signalized Arterial - Class I south of NE 1st Court and Class II north of NE 1st Court

Link Analyses

Link analyses were performed for the roadway links within the project study area. The results of the link analyses are presented in Tables 4 and 5 on the following pages.

Table 4 Link Analyses - AM Peak Hour Hallandale Oasis - Hallandale Beach, Florida								
			Existing Conditions - 2015		Future Background Conditions - 2020		Future Total Conditions - 2020	
Roadway Segment	**Lanes**	**Capacity**	**Volume**	**LOS**	**Volume**	**LOS**	**Volume**	**LOS**
Hallandale Beach Blvd								
- West of Dixie Highway	6	5,390	2,653	C	3,298	C	3,339	C
- Dixie Highway to Federal Highway	6	4,500	2,770	D	3,425	D	3,477	D
- Federal Highway to NE 8th Ave	6	4,500	3,193	D	3,543	D	3,652	D
- NE 8th Ave to NE 10th Ave	6	4,500	3,136	D	3,482	D	3,592	D
- NE 10th Ave to NE 14th Ave	6	4,500	3,146	D	3,608	D	3,758	D
- East of NE 14th Ave	6	4,500	2,548	D	3,041	D	3,093	D
Federal Highway								
- North of NE 3rd Street	4	2,920	2,313	D	2,843	D	2,883	D
- NE 3rd St to Hallandale Beach Blvd	6	5,390	2,363	C	2,893	C	2,926	C
- Hallandale Beach Blvd to SE 3rd St	6	5,390	3,021	C	3,947	C	3,971	C
- South of SE 3rd Street	6	5,390	3,322	C	4,101	C	4,142	C

Hallandale Beach Boulevard - State Signalized Arterial - Class I west of Dixie Highway and Class II east of Dixie Highway
Federal Highway - State Signalized Arterial - Class I south of NE 1st Court and Class II north of NE 1st Court

Table 5 Link Analyses - PM Peak Hour Hallandale Oasis - Hallandale Beach, Florida								
			Existing Conditions - 2015		Future Background Conditions - 2020		Future Total Conditions - 2020	
Roadway Segment	**Lanes**	**Capacity**	**Volume**	**LOS**	**Volume**	**LOS**	**Volume**	**LOS**
Hallandale Beach Blvd								
- West of Dixie Highway	6	5,390	2,982	C	4,125	C	4,173	C
- Dixie Highway to Federal Highway	6	4,500	2,857	D	3,991	D	4,052	D
- Federal Highway to NE 8th Ave	6	4,500	3,325	D	3,817	D	3,945	D
- NE 8th Ave to NE 10th Ave	6	4,500	3,370	D	3,866	D	3,997	D
- NE 10th Ave to NE 14th Ave	6	4,500	3,672	D	4,424	D	4,615	F
- East of NE 14th Ave	6	4,500	3,212	D	4,028	D	4,088	D
Federal Highway								
- North of NE 3rd Street	4	2,920	2,725	D	3,522	F	3,559	F
- NE 3rd St to Hallandale Beach Blvd	6	5,390	2,727	C	3,565	C	3,560	C
- Hallandale Beach Blvd to SE 3rd St	6	5,390	3,608	C	4,850	C	4,879	C
- South of SE 3rd Street	6	5,390	3,243	C	4,429	C	4,477	C

Hallandale Beach Boulevard - State Signalized Arterial - Class I west of Dixie Highway and Class II east of Dixie Highway
Federal Highway - State Signalized Arterial - Class I south of NE 1st Court and Class II north of NE 1st Court

SUMMARY & CONCLUSIONS

The Hallandale Oasis is a proposed mixed-use development to be located on the south side of East Hallandale Beach Boulevard (State Road 858) in the City of Hallandale Beach, Broward County, Florida. Access along E. Hallandale Beach Boulevard will be provided by one (1) right-turn in / right-turn out only driveway and one (1) right-turn in / right-turn out / left-turn in driveway. In addition, two (2) driveways are proposed at the rear (south end) of the site that will provide connections to a future / planned roadway (Hibiscus Street / SE 2nd Street). The proposed project is anticipated to be built and occupied by 2020.

The trip generation analysis indicates that the net new external vehicle trips anticipated to be generated by the proposed Hallandale Oasis project consists of approximately 3,961 vehicle trips during a typical weekday, 205 vehicle trips during the weekday AM peak hour (70 inbound and 135 outbound), and 241 vehicle trips during the weekday PM peak hour (150 inbound and 91 outbound).

Intersection capacity / level of service (LOS) analyses were conducted for the primary study intersections and capacity evaluations were performed for the secondary study intersections. In addition, roadway capacity / level of service (LOS) analyses were conducted for the roadway segments within the project's study area. The following primary study intersections are projected to operate at LOS "E/F" in the build-out year of 2020 with and/or without the project traffic associated with the Hallandale Oasis:

- Hallandale Beach Boulevard and US 1 / Federal Highway
- Hallandale Beach Boulevard and NE 10th Avenue
- Hallandale Beach Boulevard and NE 14th Avenue
- US 1 / Federal Highway and SE 3rd Street

The remaining primary study intersections are projected to operate at LOS "D" or better. The project traffic impacts on the secondary study intersections (located outside the project's primary area of influence) are expected to be minimal (i.e. less than 1.5% of the roadway's capacity).

With respect to the link analyses, all roadway links are projected to operate at an acceptable level of service in 2020 during the AM peak hour. During the PM peak hour, two (2) roadway links are projected to operate at LOS "F" in the build out year of 2020 both with the project traffic from the Hallandale Oasis. One of these links is on Hallandale Beach Boulevard between NE 10th Avenue and NE 14th Avenue and the other segment is on US 1 / Federal Highway north of NE 3rd Street.

In addition to paying the required transportation impact fees for this project, the project team is currently coordinating with City staff regarding potential improvements that will improve the traffic patterns and operations within the project study area. One of these potential improvements is a driveway connection to Gulfstream Way. This connection will greatly facilitate the traffic patterns for the Hallandale Oasis project especially for exiting traffic that desires to travel to the north, south and west of the site. This will be a significant benefit to the intersection at Hallandale Beach Boulevard and NE 14th Avenue.

Additionally, the Hallandale Oasis project will be dedicating 25 feet of right-of-way along the southern boundary of the site for the purposes of constructing Hibiscus Street (SE 2nd Street). This roadway, when completed, will provide an alternative and parallel roadway to Hallandale Beach Boulevard. This will be not only a significant benefit to this project but to the surrounding area as well. And, lastly, at the completion of each phase of this project, Broward County Traffic Engineering will be contacted in order to request that a re-evaluation be conducted of the signal timings at each of the traffic signals in the immediate vicinity of the project. This measure will serve as a potential mitigation measure of the traffic impacts created by this project.

APPENDIX A

Hallandale Oasis
Traffic Study Methodology

KBP CONSULTING, INC.

September 13, 2015

Mr. Jorge M. Szauer, P.E.
Szauer Engineering, Inc.
7050 W. Palmetto Park Road
No. 15399
Boca Raton, FL 33433

Re: Oasis I & II – Comments on Proposed Traffic Study Methodology
Hallandale Beach, Florida

Dear Jorge:

We have reviewed the proposed traffic impact study methodology for the Hallandale Oasis I & II projects to be located on Hallandale Beach Boulevard between Gulfstream Way and NE 12th Avenue. The subject methodology was prepared by Michael Miller Planning Associates, Inc. and is dated August 4, 2015. We are in general concurrence with the proposed methodology and offer the following for the City's consideration.

DATA COLLECTION – INTERSECTIONS

The proposed intersection data collection locations along Hallandale Beach Boulevard are between Dixie Highway / SE 1st Avenue to the west and State Road A1A to the east. The eastern limit along Hallandale Beach Boulevard for the previous Oasis study (completed in 2014) and for the referenced Chateau Square project was NE 14th Avenue. We propose to match this eastern limit for the Oasis project. As such, the intersections to be evaluated are:

- Hallandale Beach Boulevard and Dixie Highway / SE 1st Avenue
- Hallandale Beach Boulevard and US 1 / Federal Highway
- Hallandale Beach Boulevard and NE 8th Avenue
- Hallandale Beach Boulevard and Gulfstream Way / NE 10th Avenue
- Hallandale Beach Boulevard and NE 14th Avenue
- US 1 and SE 3rd Street
- US 1 and NE 3rd Street

The project's traffic impacts (with no data collection and no Level of Service analyses) will be documented at the following intersections:

- Hallandale Beach Boulevard and NW 4th Avenue
- Hallandale Beach Boulevard and NW 6th Avenue
- Hallandale Beach Boulevard and Layne Boulevard
- Hallandale Beach Boulevard and Golden Isles Drive
- Hallandale Beach Boulevard and Diplomat Parkway
- Hallandale Beach Boulevard and Three Island Boulevard
- US 1 and SE 9th Street
- US 1 and Atlantic Shores
- US 1 and Pembroke Road

8400 North University Drive, Suite 309, Tamarac, Florida 33321
Tel: (954) 560-7103 Fax: (954) 582-0989

DATA COLLECTION – ROADWAY LINKS

The proposed roadway link analysis methodology involves obtaining data from the FDOT's Online Traffic Data website for links on Hallandale Beach Boulevard (between I-95 and SR A1A) and on US 1 (between County Line and Pembroke Road). We suggest using available AM and PM peak hour approach and departure traffic counts (obtained from the intersection counts) for this analysis. In this manner, we will analyze the following roadway links:

- **Hallandale Beach Boulevard**
  - West of Dixie Highway / NE 1st Ave
  - Dixie Highway / NE 1st Avenue to US 1 / Federal Highway
  - US 1 / Federal Highway to NE 8th Avenue
  - NE 8th Avenue to Gulfstream Way / NE 10th Avenue
  - Gulfstream Way / NE 10th Avenue to NE 14th Avenue
  - East of NE 14th Avenue

- **US 1 / Federal Highway**
  - North of NE 3rd Street
  - NE 3rd Street to US 1 / Federal Highway
  - US 1 / Federal Highway to SE 3rd Street
  - South of SE 3rd Street

COMMITTED DEVELOPMENT PROJECTS

A list of committed / approved / pending development projects in the area has been provided by the City of Hallandale Beach. Based upon a review of this data, we propose to include the following projects in the analysis for the Oasis project:

- Village at Gulfstream / Gulfstream Park
- 7th Avenue Village
- Hallandale ArtSquare
- Gulfstream Point

Since the neighboring Chateau Square project has not been approved and is in the early stages of the review process, the traffic volumes associated with this project will not be included in the committed / approved traffic analysis. And, as mentioned during our most recent meeting at the City, the Diplomat Golf & Tennis will not be included either.

Please let me know if you have any questions or comments on this information.

KBP CONSULTING, INC.

Karl B. Peterson, P.E.
Senior Transportation Engineer

8400 North University Drive, Suite 309, Tamarac, Florida 33321
Tel: (954) 560-7103 Fax: (954) 582-0989

APPENDIX B

FDOT Pre-Application Letter

Centennial FDOT 1915 ★ 2015

Florida Department of Transportation

RICK SCOTT
GOVERNOR

3400 West Commercial Blvd.
Fort Lauderdale, FL 33309

JIM BOXOLD
SECRETARY

August 27, 2015

THIS PRE-APPLICATION LETTER IS VALID UNTIL – **AUGUST 27, 2016**
THIS LETTER IS NOT A PERMIT APPROVAL

Jorge Szauer
Szauer Engineering
7050 W. Palmetto Park Road # 15399
Boca Raton, Florida 33433

Dear Mr. Szauer:

RE: **August 27, 2015** - Pre-application Meeting for **Category E Driveway**
Broward County - City of Hallandale Beach, (Urban) SR 858 Sec. #86200; MP – 4.34
Access Class - 05 Posted Speed - 35mph SIS - N
Request: Driveway 1: Right-in/right-out only driveway located 360 feet east of Gulfstream Way. Driveway 2: Right-in/right-out/left-in located 335 feet east of Driveway 1.

SITE SPECIFIC INFORMATION
Project Name & Address: **Hallandale Oasis – 1100 E. Hallandale Beach Boulevard, Hallandale Beach, Florida**
Applicant & Property Owner: **Romagnole Investment Properties LLC**
Parcel Size: 10.08 **Acres** Max. Sq.ft: 500 units-Residential, 200 Rooms-Lodging, 60,000 SF-Office, 30,000-Retail & Restaurant-20,000 SF
Proposed LU: Residential, Lodging, Office, Retail & Restaurant

WE APPROVE YOUR REQUEST

This decision is based on your presentation of the facts, site plan and survey - please see the **conditions** and **comments** below.. You may choose to review this concept further with the District Access Management Review Committee (AMRC).

Conditions:
- **A minimum driveway length of 175 feet and 25 feet, as measured from the ultimate right-of-way line to the first conflict point shall be provided for Driveway 1 and Driveway 2, respectively.**
- **If a guard gate is installed a minimum driveway length of 100 feet is required.**
- **A right-turn lane is required and must include space for bicycle lane.**
- **All other existing driveways along the frontage of the property shall be closed.**

Comments:
- **There are two existing bus stops along the frontage of the property; coordination with Broward County Transit will be required.**

- Drainage mitigation is required for any impacts within FDOT right-of-way (i.e. increased runoff or reduction of existing storage). A Storm Water Pollution Prevention Plan must be submitted with the application for more than one acre of "disturbed area" as defined by the Florida Department of Environmental Protection (FDEP).
- The applicant shall donate the right-of-way to the Department if right-of-way dedication is required to implement the improvements,
- All driveways not approved in this letter must be fully removed and the area restored.
- Dimensions between driveways are measured from the near edge of pavement to near edge of pavement and for median openings are measured from centerline to centerline unless otherwise indicated.

The purpose of this Pre-Application letter is to document the conceptual review of the approximate location of driveway(s) to the State Highway system and to note required improvements, if any. This letter shall be submitted with any further reviews and for permitting. The Department's personnel shall review permit plans for compliance with this letter as well as current Department standards and/or specifications. Final design must consider the existing roadway profile and any impacts to the existing drainage system. **Note, this letter does not guarantee permit approval.** The permit may be denied based on the review of the submitted engineering plans. Be aware that any approved median openings may be modified (or closed) in the future, at the sole discretion of the Department. For right-of-way dedication requirements go to: https://gis.dot.state.fl.us/OneStopPermitting; click on Statewide Permit News; Scroll down to District 4; Scroll down to Additional Information and Examples and choose Right-of-way Donations/Dedications.

Please contact Geysa Sosa, P.E. at the District Permits Office with any questions regarding permits – Tel. # 954-777-4377, Fax # 954-677-7893 or e-mail: geysa.sosa@dot.state.fl.us.

Sincerely,

Dalila Fernandez, P.E.
District Traffic Access Manager

GS/nyh
cc: Roger Lemieux
File: s:\Permits\Pre-app Letters\Broward County\Romaagnole Investment Properties LLC – SR 858_Revised

APPENDIX C

Hallandale Oasis
Site Plan

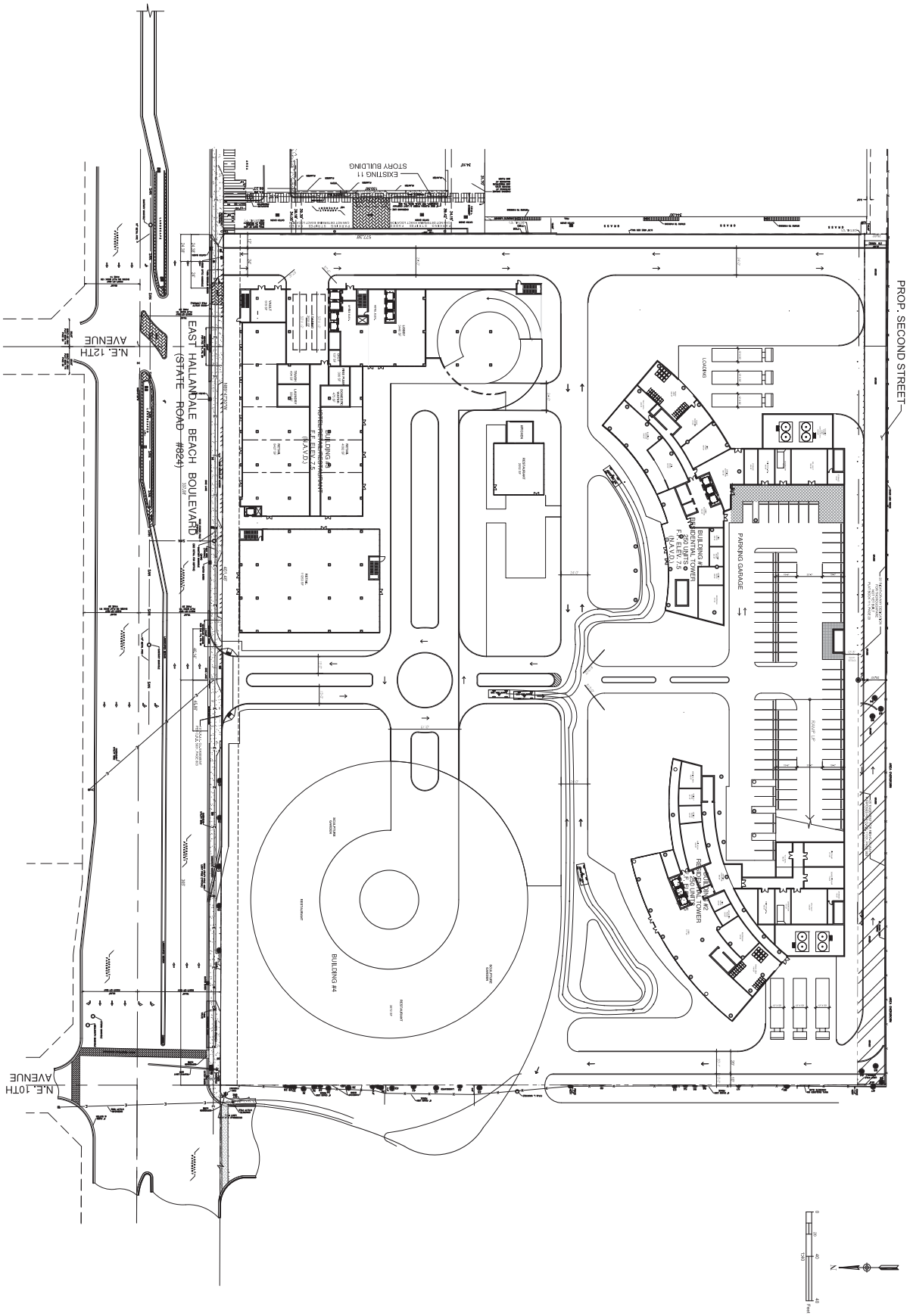

DRC SUBMITTAL
MAY 2015

OASIS

HALLANDALE BEACH

Bermello Ajamil & Partners, Inc.
2601 SOUTH BAYSHORE DRIVE, SUITE 1000
MIAMI, FL 33133
P: (305) 859-2050
WWW. BERMELLOAJAMIL.COM

APPENDIX D

Traffic Counts

Crossroads Engineering

8320 SW 90th Street
Miami, FL 33186
786-236-2857

CLIENT:TRAFTECH
JOB NO.:2015-024
PROJECT:HALLANDALE BEACH
COUNTY:MIAMI-DADE

File Name : NE 3RD AVE @ US 1
Site Code : 00000000
Start Date : 4/15/2015
Page No : 1

Groups Printed- AUTOS - HEAVY VEHICLES

	US 1 From North				NE 3RD ST From East				US 1 From South				NE 3RD ST From West				
Start Time	Right	Thru	Left	Peds	Right	Thru	Left	Peds	Right	Thru	Left	Peds	Right	Thru	Left	Peds	Int. Total
07:00 AM	4	209	4	2	1	11	5	4	0	124	13	1	10	2	12	4	406
07:15 AM	4	290	6	1	6	11	4	3	0	148	10	2	16	9	12	3	525
07:30 AM	9	333	6	1	3	18	10	2	1	169	9	0	14	9	25	3	612
07:45 AM	7	339	5	1	2	9	11	4	1	207	20	3	15	19	20	2	665
Total	24	1171	21	5	12	49	30	13	2	648	52	6	55	39	69	12	2208
08:00 AM	13	332	6	3	3	5	11	3	0	195	10	1	24	11	19	0	636
08:15 AM	9	289	10	1	7	19	9	2	2	201	13	4	13	18	17	4	618
08:30 AM	11	303	4	3	2	15	12	3	2	297	7	2	11	19	15	4	710
08:45 AM	9	295	8	3	2	11	4	6	1	240	18	2	24	22	11	5	661
Total	42	1219	28	10	14	50	36	14	5	933	48	9	72	70	62	13	2625
*** BREAK ***																	
04:00 PM	3	289	6	2	5	18	17	4	4	310	21	1	22	24	17	2	745
04:15 PM	10	277	8	3	5	21	9	2	4	315	26	2	18	14	23	4	741
04:30 PM	11	310	11	4	3	15	13	3	4	294	33	1	22	17	23	4	768
04:45 PM	14	292	4	1	1	22	12	1	3	295	22	0	12	25	14	8	726
Total	38	1168	29	10	14	76	51	10	15	1214	102	4	74	80	77	18	2980
05:00 PM	8	292	6	0	2	28	9	4	5	321	18	7	9	29	14	6	758
05:15 PM	11	320	6	3	4	27	17	6	2	314	24	3	18	21	27	1	804
05:30 PM	13	369	4	5	3	28	17	7	1	345	19	1	17	22	19	6	876
05:45 PM	5	296	10	3	1	21	3	7	3	304	25	2	19	24	31	12	766
Total	37	1277	26	11	10	104	46	24	11	1284	86	13	63	96	91	25	3204
Grand Total	141	4835	104	36	50	279	163	61	33	4079	288	32	264	285	299	68	11017
Apprch %	2.8	94.5	2	0.7	9	50.5	29.5	11	0.7	92	6.5	0.7	28.8	31.1	32.6	7.4	
Total %	1.3	43.9	0.9	0.3	0.5	2.5	1.5	0.6	0.3	37	2.6	0.3	2.4	2.6	2.7	0.6	
AUTOS	140	4748	102	36	49	273	163	61	33	4000	286	32	259	282	291	68	10823
% AUTOS	99.3	98.2	98.1	100	98	97.8	100	100	100	98.1	99.3	100	98.1	98.9	97.3	100	98.2
HEAVY VEHICLES	1	87	2	0	1	6	0	0	0	79	2	0	5	3	8	0	194
% HEAVY VEHICLES	0.7	1.8	1.9	0	2	2.2	0	0	0	1.9	0.7	0	1.9	1.1	2.7	0	1.8

Crossroads Engineering

8320 SW 90th Street
Miami, FL 33186
786-236-2857

CLIENT:TRAFTECH
JOB NO.:2015-024
PROJECT:HALLANDALE BEACH
COUNTY:MIAMI-DADE

File Name : NE 3RD AVE @ US 1
Site Code : 00000000
Start Date : 4/15/2015
Page No : 2

	US 1 From North					NE 3RD ST From East					US 1 From South					NE 3RD ST From West					
Start Time	Right	Thru	Left	Peds	App. Total	Right	Thru	Left	Peds	App. Total	Right	Thru	Left	Peds	App. Total	Right	Thru	Left	Peds	App. Total	Int. Total
Peak Hour Analysis From 07:00 AM to 08:45 AM - Peak 1 of 1																					
Peak Hour for Entire Intersection Begins at 07:45 AM																					
07:45 AM	7	**339**	5	1	352	2	9	11	**4**	26	1	207	**20**	3	231	15	**19**	**20**	2	**56**	665
08:00 AM	**13**	332	6	**3**	**354**	3	5	11	3	22	0	195	10	1	206	**24**	11	19	0	54	636
08:15 AM	9	289	**10**	1	309	**7**	**19**	9	2	**37**	**2**	201	13	**4**	220	13	18	17	**4**	52	618
08:30 AM	11	303	4	3	321	2	15	**12**	3	32	2	**297**	7	2	**308**	11	19	15	4	49	**710**
Total Volume	40	1263	25	8	1336	14	48	43	12	117	5	900	50	10	965	63	67	71	10	211	2629
% App. Total	3	94.5	1.9	0.6		12	41	36.8	10.3		0.5	93.3	5.2	1		29.9	31.8	33.6	4.7		
PHF	.769	.931	.625	.667	.944	.500	.632	.896	.750	.791	.625	.758	.625	.625	.783	.656	.882	.888	.625	.942	.926

Crossroads Engineering

8320 SW 90th Street
Miami, FL 33186
786-236-2857

CLIENT:TRAFTECH
JOB NO.:2015-024
PROJECT:HALLANDALE BEACH
COUNTY:MIAMI-DADE

File Name : NE 3RD AVE @ US 1
Site Code : 00000000
Start Date : 4/15/2015
Page No : 3

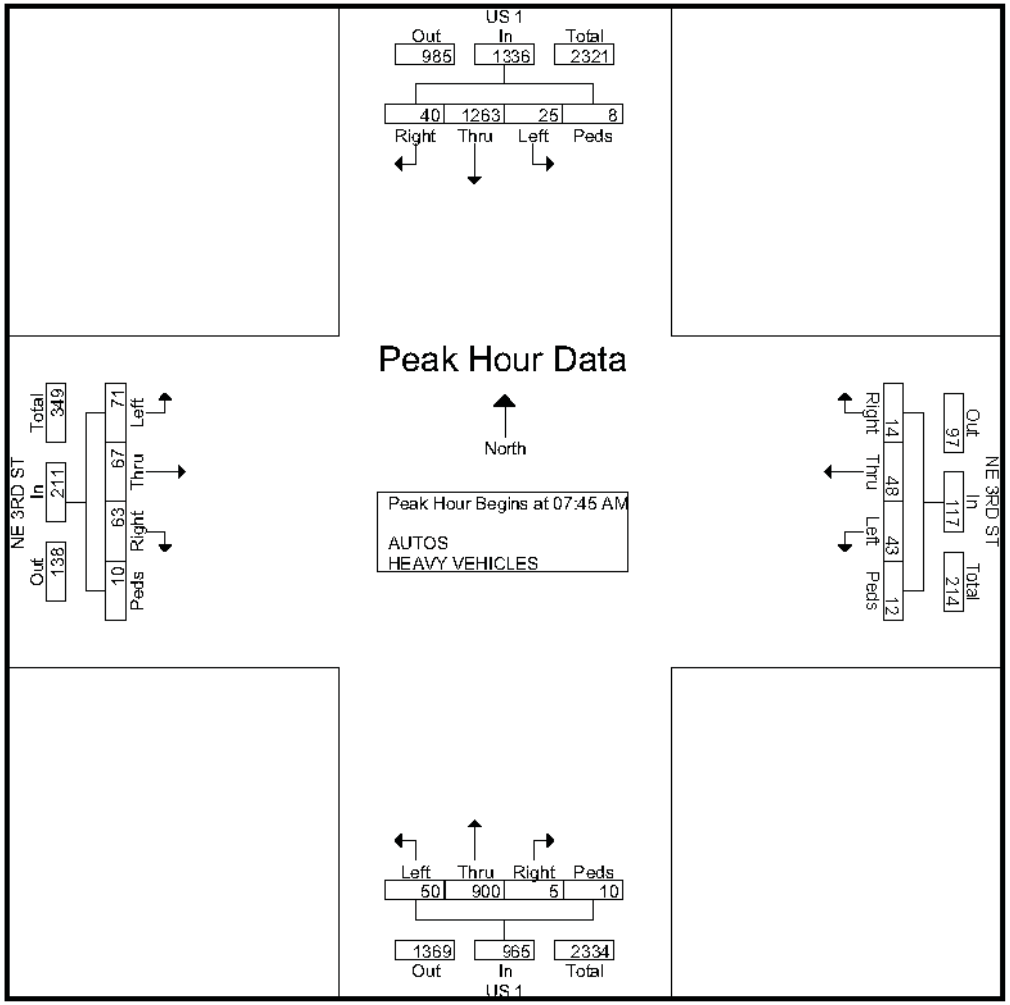

Crossroads Engineering

8320 SW 90th Street
Miami, FL 33186
786-236-2857

CLIENT:TRAFTECH
JOB NO.:2015-024
PROJECT:HALLANDALE BEACH
COUNTY:MIAMI-DADE

File Name : NE 3RD AVE @ US 1
Site Code : 00000000
Start Date : 4/15/2015
Page No : 4

	US 1 From North					NE 3RD ST From East					US 1 From South					NE 3RD ST From West					
Start Time	Right	Thru	Left	Peds	App. Total	Right	Thru	Left	Peds	App. Total	Right	Thru	Left	Peds	App. Total	Right	Thru	Left	Peds	App. Total	Int. Total
Peak Hour Analysis From 04:00 PM to 05:45 PM - Peak 1 of 1																					
Peak Hour for Entire Intersection Begins at 05:00 PM																					
05:00 PM	8	292	6	0	306	2	**28**	9	4	43	**5**	321	18	**7**	351	9	**29**	14	6	58	758
05:15 PM	11	320	6	3	340	**4**	27	**17**	6	54	2	314	24	3	343	18	21	27	1	67	804
05:30 PM	**13**	**369**	4	**5**	**391**	3	28	17	**7**	**55**	1	**345**	19	1	**366**	17	22	19	6	64	**876**
05:45 PM	5	296	**10**	3	314	1	21	3	7	32	3	304	**25**	2	334	**19**	24	**31**	**12**	**86**	766
Total Volume	37	1277	26	11	1351	10	104	46	24	184	11	1284	86	13	1394	63	96	91	25	275	3204
% App. Total	2.7	94.5	1.9	0.8		5.4	56.5	25	13		0.8	92.1	6.2	0.9		22.9	34.9	33.1	9.1		
PHF	.712	.865	.650	.550	.864	.625	.929	.676	.857	.836	.550	.930	.860	.464	.952	.829	.828	.734	.521	.799	.914

Crossroads Engineering

8320 SW 90th Street
Miami, FL 33186
786-236-2857

CLIENT:TRAFTECH
JOB NO.:2015-024
PROJECT:HALLANDALE BEACH
COUNTY:MIAMI-DADE

File Name : NE 3RD AVE @ US 1
Site Code : 00000000
Start Date : 4/15/2015
Page No : 5

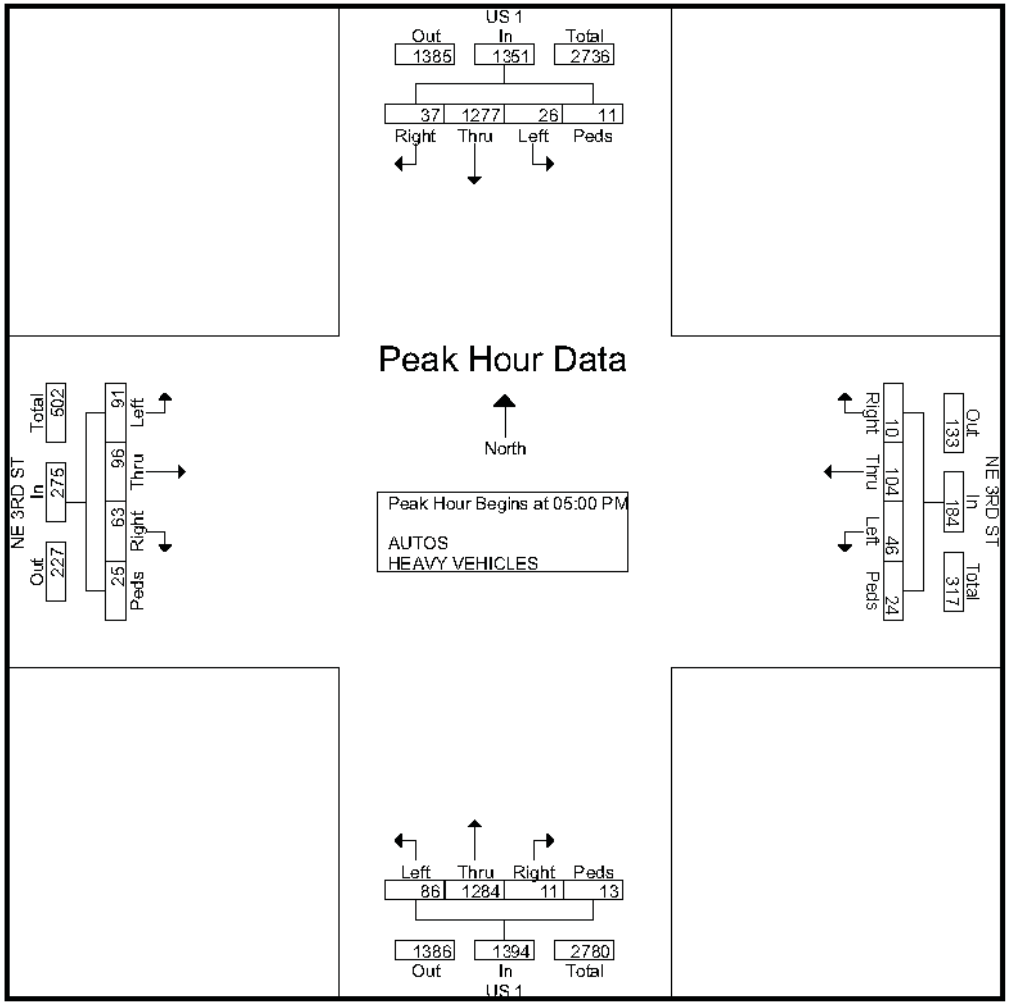

Crossroads Engineering

8320 SW 90th Street
Miami, FL 33186
786-236-2857

CLIENT:TRAFTECH
JOB NO.:2015-024
PROJECT:HALLANDALE BEACH
COUNTY:MIAMI-DADE

File Name : NE 3RD AVE @ US 1
Site Code : 00000000
Start Date : 4/15/2015
Page No : 1

Groups Printed- HEAVY VEHICLES

	US 1 From North				NE 3RD ST From East				US 1 From South				NE 3RD ST From West				
Start Time	Right	Thru	Left	Peds	Right	Thru	Left	Peds	Right	Thru	Left	Peds	Right	Thru	Left	Peds	Int. Total
07:00 AM	0	6	0	0	0	0	0	0	0	2	0	0	1	0	0	0	9
07:15 AM	0	8	0	0	0	1	0	0	0	9	0	0	0	0	0	0	18
07:30 AM	0	4	0	0	0	0	0	0	0	6	0	0	0	0	0	0	10
07:45 AM	0	8	0	0	0	0	0	0	0	7	0	0	0	0	1	0	16
Total	0	26	0	0	0	1	0	0	0	24	0	0	1	0	1	0	53
08:00 AM	1	8	0	0	0	0	0	0	0	2	0	0	2	1	2	0	16
08:15 AM	0	6	1	0	0	1	0	0	0	4	0	0	0	1	1	0	14
08:30 AM	0	8	1	0	1	1	0	0	0	8	0	0	0	0	0	0	19
08:45 AM	0	5	0	0	0	0	0	0	0	4	0	0	0	0	1	0	10
Total	1	27	2	0	1	2	0	0	0	18	0	0	2	2	4	0	59
*** BREAK ***																	
04:00 PM	0	5	0	0	0	0	0	0	0	6	0	0	0	0	0	0	11
04:15 PM	0	6	0	0	0	0	0	0	0	7	1	0	1	0	0	0	15
04:30 PM	0	3	0	0	0	0	0	0	0	4	0	0	1	0	1	0	9
04:45 PM	0	3	0	0	0	0	0	0	0	3	0	0	0	0	0	0	6
Total	0	17	0	0	0	0	0	0	0	20	1	0	2	0	1	0	41
05:00 PM	0	5	0	0	0	0	0	0	0	2	0	0	0	1	0	0	8
05:15 PM	0	5	0	0	0	1	0	0	0	2	1	0	0	0	1	0	10
05:30 PM	0	5	0	0	0	1	0	0	0	6	0	0	0	0	0	0	12
05:45 PM	0	2	0	0	0	1	0	0	0	7	0	0	0	0	1	0	11
Total	0	17	0	0	0	3	0	0	0	17	1	0	0	1	2	0	41
Grand Total	1	87	2	0	1	6	0	0	0	79	2	0	5	3	8	0	194
Apprch %	1.1	96.7	2.2	0	14.3	85.7	0	0	0	97.5	2.5	0	31.2	18.8	50	0	
Total %	0.5	44.8	1	0	0.5	3.1	0	0	0	40.7	1	0	2.6	1.5	4.1	0	

Crossroads Engineering

8320 SW 90th Street
Miami, FL 33186
786-236-2857

CLIENT:TRAFTECH
JOB NO.:2015-024
PROJECT:HALLANDALE BEACH
COUNTY:MIAMI-DADE

File Name : NE 3RD AVE @ US 1
Site Code : 00000000
Start Date : 4/15/2015
Page No : 2

	US 1 From North					NE 3RD ST From East					US 1 From South					NE 3RD ST From West					
Start Time	Right	Thru	Left	Peds	App. Total	Right	Thru	Left	Peds	App. Total	Right	Thru	Left	Peds	App. Total	Right	Thru	Left	Peds	App. Total	Int. Total
Peak Hour Analysis From 07:00 AM to 08:45 AM - Peak 1 of 1																					
Peak Hour for Entire Intersection Begins at 07:45 AM																					
07:45 AM	0	**8**	0	0	8	0	0	0	0	0	0	**7**	0	0	**7**	0	0	1	0	1	16
08:00 AM	**1**	8	0	0	**9**	0	0	0	0	0	0	2	0	0	2	**2**	**1**	**2**	0	**5**	16
08:15 AM	0	6	**1**	0	**7**	0	**1**	0	0	1	0	**4**	0	0	**4**	0	1	1	0	2	14
08:30 AM	0	8	1	0	9	**1**	1	0	0	**2**	0	**8**	0	0	**8**	0	0	0	0	0	**19**
Total Volume	1	30	2	0	33	1	2	0	0	3	0	21	0	0	21	2	2	**4**	0	8	65
% App. Total	3	90.9	6.1	0		33.3	66.7	0	0		0	100	0	0		25	25	50	0		
PHF	.250	.938	.500	.000	.917	.250	.500	.000	.000	.375	.000	.656	.000	.000	.656	.250	.500	.500	.000	.400	.855

Crossroads Engineering

8320 SW 90th Street
Miami, FL 33186
786-236-2857

CLIENT:TRAFTECH
JOB NO.:2015-024
PROJECT:HALLANDALE BEACH
COUNTY:MIAMI-DADE

File Name : NE 3RD AVE @ US 1
Site Code : 00000000
Start Date : 4/15/2015
Page No : 3

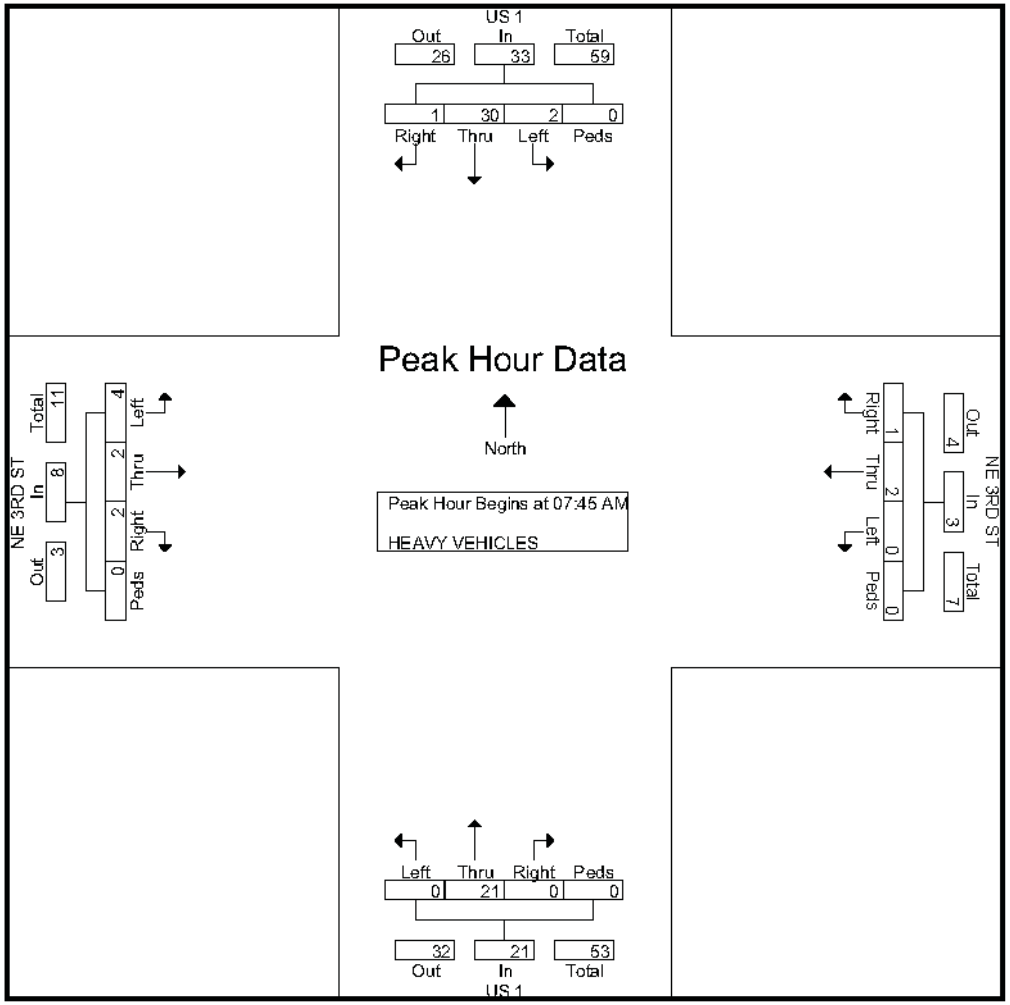

Crossroads Engineering

8320 SW 90th Street
Miami, FL 33186
786-236-2857

CLIENT:TRAFTECH
JOB NO.:2015-024
PROJECT:HALLANDALE BEACH
COUNTY:MIAMI-DADE

File Name : NE 3RD AVE @ US 1
Site Code : 00000000
Start Date : 4/15/2015
Page No : 4

	US 1 From North					NE 3RD ST From East					US 1 From South					NE 3RD ST From West					
Start Time	Right	Thru	Left	Peds	App. Total	Right	Thru	Left	Peds	App. Total	Right	Thru	Left	Peds	App. Total	Right	Thru	Left	Peds	App. Total	Int. Total
Peak Hour Analysis From 04:00 PM to 05:45 PM - Peak 1 of 1																					
Peak Hour for Entire Intersection Begins at 04:00 PM																					
04:00 PM	0	5	0	0	5	0	0	0	0	0	0	6	0	0	6	0	0	0	0	0	11
04:15 PM	0	**6**	0	0	**6**	0	0	0	0	0	0	**7**	**1**	0	**8**	**1**	0	0	0	1	**15**
04:30 PM	0	3	0	0	3	0	0	0	0	0	0	**4**	0	0	**4**	1	0	**1**	0	**2**	9
04:45 PM	0	3	0	0	3	0	0	0	0	0	0	3	0	0	3	0	0	0	0	0	6
Total Volume	0	17	0	0	17	0	0	0	0	0	0	20	1	0	21	2	0	1	0	3	41
% App. Total	0	100	0	0		0	0	0	0		0	95.2	4.8	0		66.7	0	33.3	0		
PHF	.000	.708	.000	.000	.708	.000	.000	.000	.000	.000	.000	.714	.250	.000	.656	.500	.000	.250	.000	.375	.683

Crossroads Engineering

8320 SW 90th Street
Miami, FL 33186
786-236-2857

CLIENT:TRAFTECH
JOB NO.:2015-024
PROJECT:HALLANDALE BEACH
COUNTY:MIAMI-DADE

File Name : HALLANDALE BEACH BLVD @ US 1
Site Code : 00000000
Start Date : 4/15/2015
Page No : 1

Groups Printed- AUTOS - HEAVY VEHICLES

	US 1 From North				HALLANDALE BCH BLVD From East				US 1 From South				HALLANDALE BCH BLVD From West				
Start Time	Right	Thru	Left	Peds	Right	Thru	Left	Peds	Right	Thru	Left	Peds	Right	Thru	Left	Peds	Int. Total
07:00 AM	9	189	92	4	19	184	76	4	22	80	44	2	34	161	22	0	942
07:15 AM	15	205	81	0	16	210	67	3	35	86	36	4	43	214	20	0	1035
07:30 AM	16	240	83	7	20	208	144	3	59	121	33	2	43	168	31	0	1178
07:45 AM	16	355	94	0	17	207	119	1	47	158	50	1	57	179	21	1	1323
Total	56	989	350	11	72	809	406	11	163	445	163	9	177	722	94	1	4478
08:00 AM	15	266	122	2	24	249	121	1	64	138	56	3	49	242	55	0	1407
08:15 AM	9	229	86	2	8	224	124	2	77	167	77	1	73	235	37	1	1352
08:30 AM	7	265	104	1	35	205	144	3	75	162	87	0	82	209	54	1	1434
08:45 AM	11	220	123	6	20	246	154	1	102	178	71	5	81	200	28	1	1447
Total	42	980	435	11	87	924	543	7	318	645	291	9	285	886	174	3	5640
*** BREAK ***																	
04:00 PM	14	258	76	3	33	273	140	2	60	238	133	3	64	230	28	2	1557
04:15 PM	28	289	104	6	27	255	136	0	103	241	123	1	56	222	42	2	1635
04:30 PM	18	209	102	2	58	262	146	8	81	210	138	3	73	230	49	2	1591
04:45 PM	13	272	79	1	42	231	140	0	79	247	120	1	52	216	50	1	1544
Total	73	1028	361	12	160	1021	562	10	323	936	514	8	245	898	169	7	6327
05:00 PM	18	255	103	2	31	285	123	2	58	228	112	6	57	234	32	1	1547
05:15 PM	24	231	87	6	45	287	143	8	64	178	100	4	68	232	53	5	1535
05:30 PM	26	291	97	5	46	265	155	4	80	233	131	0	62	193	41	2	1631
05:45 PM	16	249	103	3	38	235	118	2	62	167	110	5	70	249	37	5	1469
Total	84	1026	390	16	160	1072	539	16	264	806	453	15	257	908	163	13	6182
Grand Total	255	4023	1536	50	479	3826	2050	44	1068	2832	1421	41	964	3414	600	24	22627
Apprch %	4.3	68.6	26.2	0.9	7.5	59.8	32	0.7	19.9	52.8	26.5	0.8	19.3	68.3	12	0.5	
Total %	1.1	17.8	6.8	0.2	2.1	16.9	9.1	0.2	4.7	12.5	6.3	0.2	4.3	15.1	2.7	0.1	
AUTOS	251	3950	1511	50	471	3738	2019	44	1042	2764	1382	41	946	3358	593	24	22184
% AUTOS	98.4	98.2	98.4	100	98.3	97.7	98.5	100	97.6	97.6	97.3	100	98.1	98.4	98.8	100	98
HEAVY VEHICLES	4	73	25	0	8	88	31	0	26	68	39	0	18	56	7	0	443
% HEAVY VEHICLES	1.6	1.8	1.6	0	1.7	2.3	1.5	0	2.4	2.4	2.7	0	1.9	1.6	1.2	0	2

Crossroads Engineering

8320 SW 90th Street
Miami, FL 33186
786-236-2857

CLIENT:TRAFTECH
JOB NO.:2015-024
PROJECT:HALLANDALE BEACH
COUNTY:MIAMI-DADE

File Name : HALLANDALE BEACH BLVD @ US 1
Site Code : 00000000
Start Date : 4/15/2015
Page No : 2

	US 1 From North					HALLANDALE BCH BLVD From East					US 1 From South					HALLANDALE BCH BLVD From West					
Start Time	Right	Thru	Left	Peds	App. Total	Right	Thru	Left	Peds	App. Total	Right	Thru	Left	Peds	App. Total	Right	Thru	Left	Peds	App. Total	Int. Total
Peak Hour Analysis From 07:00 AM to 08:45 AM - Peak 1 of 1																					
Peak Hour for Entire Intersection Begins at 08:00 AM																					
08:00 AM	**15**	**266**	122	2	**405**	24	**249**	121	1	395	64	138	56	3	261	49	**242**	**55**	0	**346**	1407
08:15 AM	9	229	86	2	326	8	224	124	2	358	77	167	77	1	322	73	235	37	**1**	346	1352
08:30 AM	7	265	104	1	377	**35**	205	144	**3**	387	75	162	**87**	0	324	**82**	209	54	1	346	1434
08:45 AM	11	220	**123**	**6**	360	20	246	**154**	1	**421**	**102**	**178**	71	**5**	**356**	81	200	28	1	310	**1447**
Total Volume	42	980	435	11	1468	87	924	543	7	1561	318	645	291	9	1263	285	886	174	3	1348	5640
% App. Total	2.9	66.8	29.6	0.7		5.6	59.2	34.8	0.4		25.2	51.1	23	0.7		21.1	65.7	12.9	0.2		
PHF	.700	.921	.884	.458	.906	.621	.928	.881	.583	.927	.779	.906	.836	.450	.887	.869	.915	.791	.750	.974	.974

Crossroads Engineering

8320 SW 90th Street
Miami, FL 33186
786-236-2857

CLIENT:TRAFTECH
JOB NO.:2015-024
PROJECT:HALLANDALE BEACH
COUNTY:MIAMI-DADE

File Name : HALLANDALE BEACH BLVD @ US 1
Site Code : 00000000
Start Date : 4/15/2015
Page No : 3

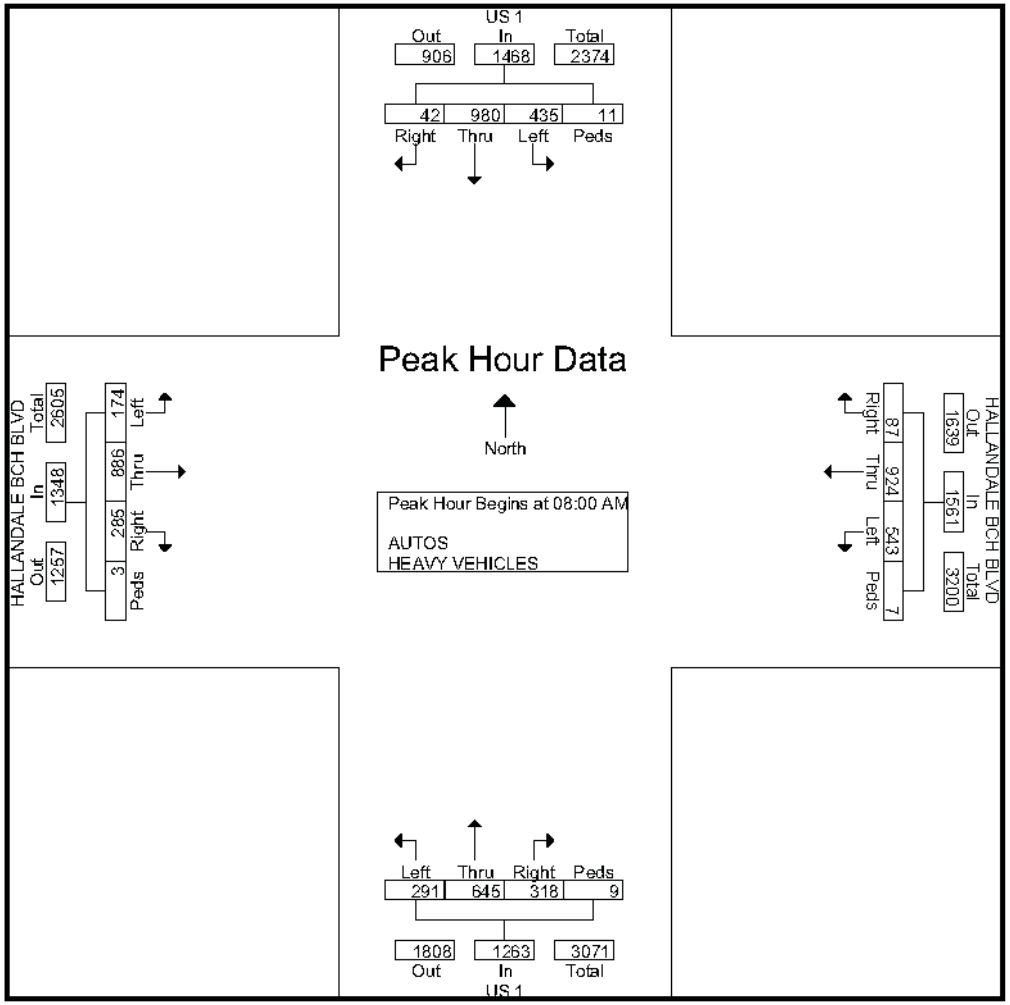

Crossroads Engineering

8320 SW 90th Street
Miami, FL 33186
786-236-2857

CLIENT:TRAFTECH
JOB NO.:2015-024
PROJECT:HALLANDALE BEACH
COUNTY:MIAMI-DADE

File Name : HALLANDALE BEACH BLVD @ US 1
Site Code : 00000000
Start Date : 4/15/2015
Page No : 4

	US 1 From North					HALLANDALE BCH BLVD From East					US 1 From South					HALLANDALE BCH BLVD From West					
Start Time	Right	Thru	Left	Peds	App. Total	Right	Thru	Left	Peds	App. Total	Right	Thru	Left	Peds	App. Total	Right	Thru	Left	Peds	App. Total	Int. Total
Peak Hour Analysis From 04:00 PM to 05:45 PM - Peak 1 of 1																					
Peak Hour for Entire Intersection Begins at 04:00 PM																					
04:00 PM	14	258	76	3	351	33	**273**	140	2	448	60	238	133	**3**	434	64	**230**	28	**2**	324	1557
04:15 PM	**28**	**289**	**104**	**6**	**427**	27	255	136	0	418	**103**	241	123	1	**468**	56	222	42	2	322	**1635**
04:30 PM	18	209	102	2	331	**58**	262	**146**	**8**	**474**	81	210	**138**	3	432	**73**	230	49	2	**354**	1591
04:45 PM	13	272	79	1	365	42	231	140	0	413	79	**247**	120	1	447	52	216	**50**	1	319	1544
Total Volume	73	1028	361	12	1474	160	1021	562	10	1753	323	936	514	8	1781	245	898	169	7	1319	6327
% App. Total	5	69.7	24.5	0.8		9.1	58.2	32.1	0.6		18.1	52.6	28.9	0.4		18.6	68.1	12.8	0.5		
PHF	.652	.889	.868	.500	.863	.690	.935	.962	.313	.925	.784	.947	.931	.667	.951	.839	.976	.845	.875	.931	.967

Crossroads Engineering

8320 SW 90th Street
Miami, FL 33186
786-236-2857

CLIENT:TRAFTECH
JOB NO.:2015-024
PROJECT:HALLANDALE BEACH
COUNTY:MIAMI-DADE

File Name : HALLANDALE BEACH BLVD @ US 1
Site Code : 00000000
Start Date : 4/15/2015
Page No : 5

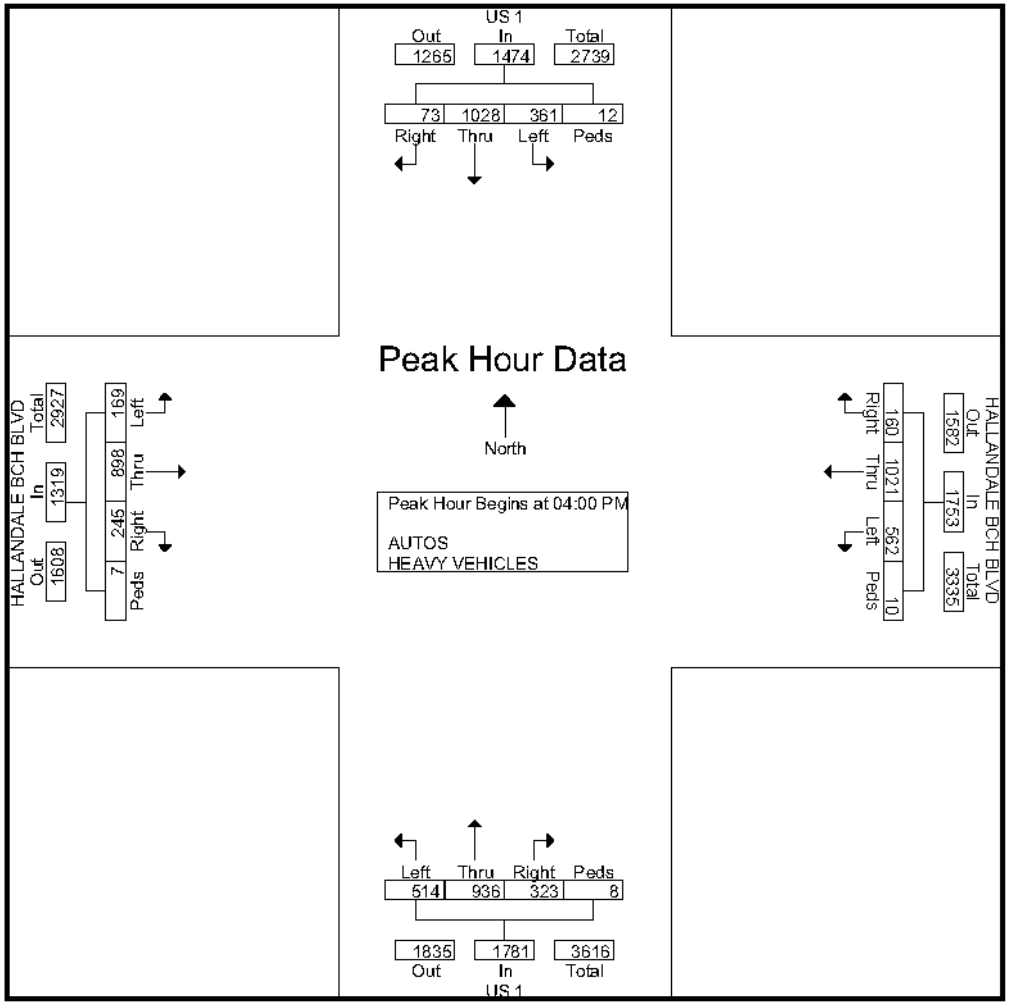

Crossroads Engineering

8320 SW 90th Street
Miami, FL 33186
786-236-2857

CLIENT:TRAFTECH
JOB NO.:2015-024
PROJECT:HALLANDALE BEACH
COUNTY:MIAMI-DADE

File Name : HALLANDALE BEACH BLVD @ US 1
Site Code : 00000000
Start Date : 4/15/2015
Page No : 1

Groups Printed- HEAVY VEHICLES

	US 1 From North				HALLANDALE BCH BLVD From East				US 1 From South				HALLANDALE BCH BLVD From West				
Start Time	Right	Thru	Left	Peds	Right	Thru	Left	Peds	Right	Thru	Left	Peds	Right	Thru	Left	Peds	Int. Total
07:00 AM	0	6	3	0	0	4	1	0	2	2	2	0	1	3	0	0	24
07:15 AM	0	2	2	0	0	2	2	0	2	8	1	0	2	4	0	0	25
07:30 AM	1	7	1	0	0	6	2	0	3	6	0	0	4	7	2	0	39
07:45 AM	0	6	2	0	1	2	2	0	2	5	0	0	1	4	1	0	26
Total	1	21	8	0	1	14	7	0	9	21	3	0	8	18	3	0	114
08:00 AM	0	8	2	0	0	5	3	0	0	5	3	0	1	4	0	0	31
08:15 AM	0	4	3	0	0	10	3	0	3	2	3	0	2	6	0	0	36
08:30 AM	0	6	1	0	2	2	6	0	2	5	3	0	2	3	2	0	34
08:45 AM	0	4	5	0	0	3	0	0	0	4	2	0	2	7	0	0	27
Total	0	22	11	0	2	20	12	0	5	16	11	0	7	20	2	0	128
*** BREAK ***																	
04:00 PM	0	4	2	0	0	19	1	0	1	4	1	0	0	5	0	0	37
04:15 PM	1	4	1	0	1	7	1	0	1	9	2	0	1	0	2	0	30
04:30 PM	0	5	0	0	0	6	2	0	1	2	4	0	0	4	0	0	24
04:45 PM	0	6	2	0	2	7	2	0	3	3	1	0	0	2	0	0	28
Total	1	19	5	0	3	39	6	0	6	18	8	0	1	11	2	0	119
05:00 PM	0	1	0	0	0	4	3	0	3	3	6	0	0	2	0	0	22
05:15 PM	2	4	0	0	1	6	0	0	1	3	3	0	0	1	0	0	21
05:30 PM	0	4	0	0	0	1	2	0	1	3	7	0	0	2	0	0	20
05:45 PM	0	2	1	0	1	4	1	0	1	4	1	0	2	2	0	0	19
Total	2	11	1	0	2	15	6	0	6	13	17	0	2	7	0	0	82
Grand Total	4	73	25	0	8	88	31	0	26	68	39	0	18	56	7	0	443
Apprch %	3.9	71.6	24.5	0	6.3	69.3	24.4	0	19.5	51.1	29.3	0	22.2	69.1	8.6	0	
Total %	0.9	16.5	5.6	0	1.8	19.9	7	0	5.9	15.3	8.8	0	4.1	12.6	1.6	0	

Crossroads Engineering

8320 SW 90th Street
Miami, FL 33186
786-236-2857

CLIENT:TRAFTECH
JOB NO.:2015-024
PROJECT:HALLANDALE BEACH
COUNTY:MIAMI-DADE

File Name : SE 3RD AVE @ US 1
Site Code : 00000000
Start Date : 4/15/2015
Page No : 1

Groups Printed- AUTOS - HEAVY VEHICLES

	US 1 From North				SE 3RD ST From East				US 1 From South				SE 3RD ST From West				
Start Time	Right	Thru	Left	Peds	Right	Thru	Left	Peds	Right	Thru	Left	Peds	Right	Thru	Left	Peds	Int. Total
07:00 AM	1	325	2	3	2	0	0	0	1	162	3	0	18	2	9	2	530
07:15 AM	0	334	2	0	0	0	1	1	4	175	4	0	26	6	17	0	570
07:30 AM	0	390	3	2	1	2	3	5	2	182	2	1	34	4	26	6	663
07:45 AM	2	428	7	1	2	0	3	1	8	179	13	0	69	14	26	0	753
Total	3	1477	14	6	5	2	7	7	15	698	22	1	147	26	78	8	2516
08:00 AM	2	427	9	0	1	1	6	3	2	234	10	2	73	28	32	2	832
08:15 AM	1	404	11	0	2	3	3	1	5	288	15	0	83	22	33	3	874
08:30 AM	1	402	16	1	4	3	10	0	5	293	16	2	127	24	39	0	943
08:45 AM	2	466	5	2	2	1	4	3	4	309	23	0	113	28	38	2	1002
Total	6	1699	41	3	9	8	23	7	16	1124	64	4	396	102	142	7	3651
*** BREAK ***																	
04:00 PM	1	393	21	1	24	14	31	1	1	346	45	1	38	14	40	4	975
04:15 PM	5	393	17	0	28	14	24	2	9	332	17	2	38	13	46	4	944
04:30 PM	3	391	13	0	29	16	31	6	3	358	40	2	34	16	42	5	989
04:45 PM	4	391	18	4	39	22	20	0	4	266	19	1	35	11	26	3	863
Total	13	1568	69	5	120	66	106	9	17	1302	121	6	145	54	154	16	3771
05:00 PM	3	389	14	1	54	47	37	4	1	254	19	2	32	18	47	1	923
05:15 PM	2	421	21	0	28	15	18	3	0	333	13	1	27	17	46	3	948
05:30 PM	4	428	13	1	28	23	25	3	6	278	20	4	36	10	29	1	909
05:45 PM	1	423	12	1	25	21	22	3	4	326	16	6	36	20	45	5	966
Total	10	1661	60	3	135	106	102	13	11	1191	68	13	131	65	167	10	3746
Grand Total	32	6405	184	17	269	182	238	36	59	4315	275	24	819	247	541	41	13684
Apprch %	0.5	96.5	2.8	0.3	37.1	25.1	32.8	5	1.3	92.3	5.9	0.5	49.7	15	32.8	2.5	
Total %	0.2	46.8	1.3	0.1	2	1.3	1.7	0.3	0.4	31.5	2	0.2	6	1.8	4	0.3	
AUTOS	31	6318	183	17	268	181	235	36	58	4237	272	24	815	246	529	41	13491
% AUTOS	96.9	98.6	99.5	100	99.6	99.5	98.7	100	98.3	98.2	98.9	100	99.5	99.6	97.8	100	98.6
HEAVY VEHICLES	1	87	1	0	1	1	3	0	1	78	3	0	4	1	12	0	193
% HEAVY VEHICLES	3.1	1.4	0.5	0	0.4	0.5	1.3	0	1.7	1.8	1.1	0	0.5	0.4	2.2	0	1.4

Crossroads Engineering

8320 SW 90th Street
Miami, FL 33186
786-236-2857

CLIENT:TRAFTECH
JOB NO.:2015-024
PROJECT:HALLANDALE BEACH
COUNTY:MIAMI-DADE

File Name : SE 3RD AVE @ US 1
Site Code : 00000000
Start Date : 4/15/2015
Page No : 2

	US 1 From North					SE 3RD ST From East					US 1 From South					SE 3RD ST From West					
Start Time	Right	Thru	Left	Peds	App. Total	Right	Thru	Left	Peds	App. Total	Right	Thru	Left	Peds	App. Total	Right	Thru	Left	Peds	App. Total	Int. Total
Peak Hour Analysis From 07:00 AM to 08:45 AM - Peak 1 of 1																					
Peak Hour for Entire Intersection Begins at 08:00 AM																					
08:00 AM	**2**	427	9	0	438	1	1	6	**3**	11	2	234	10	**2**	248	73	**28**	32	2	135	832
08:15 AM	1	404	11	0	416	2	**3**	3	1	9	**5**	288	15	0	308	83	22	33	**3**	141	874
08:30 AM	1	402	**16**	1	420	**4**	3	**10**	0	**17**	5	293	16	2	316	**127**	24	**39**	0	**190**	943
08:45 AM	2	**466**	5	**2**	**475**	2	1	4	3	10	4	**309**	**23**	0	**336**	113	28	38	2	181	**1002**
Total Volume	6	1699	41	3	1749	9	8	23	7	47	16	1124	64	4	1208	396	102	142	7	647	3651
% App. Total	0.3	97.1	2.3	0.2		19.1	17	48.9	14.9		1.3	93	5.3	0.3		61.2	15.8	21.9	1.1		
PHF	.750	.911	.641	.375	.921	.563	.667	.575	.583	.691	.800	.909	.696	.500	.899	.780	.911	.910	.583	.851	.911

Crossroads Engineering

8320 SW 90th Street
Miami, FL 33186
786-236-2857

CLIENT:TRAFTECH
JOB NO.:2015-024
PROJECT:HALLANDALE BEACH
COUNTY:MIAMI-DADE

File Name : SE 3RD AVE @ US 1
Site Code : 00000000
Start Date : 4/15/2015
Page No : 3

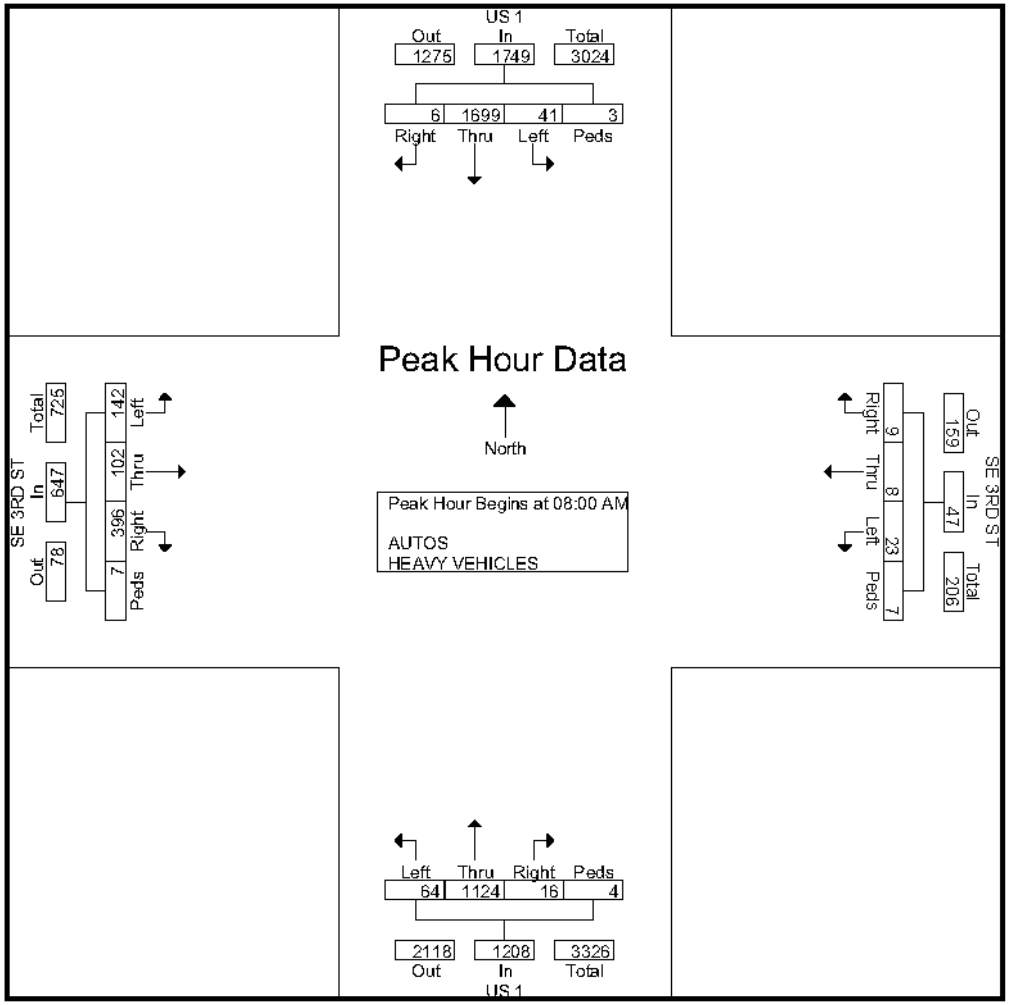

Crossroads Engineering

8320 SW 90th Street
Miami, FL 33186
786-236-2857

CLIENT:TRAFTECH
JOB NO.:2015-024
PROJECT:HALLANDALE BEACH
COUNTY:MIAMI-DADE

File Name : SE 3RD AVE @ US 1
Site Code : 00000000
Start Date : 4/15/2015
Page No : 4

	US 1 From North					SE 3RD ST From East					US 1 From South					SE 3RD ST From West					
Start Time	Right	Thru	Left	Peds	App. Total	Right	Thru	Left	Peds	App. Total	Right	Thru	Left	Peds	App. Total	Right	Thru	Left	Peds	App. Total	Int. Total
Peak Hour Analysis From 04:00 PM to 05:45 PM - Peak 1 of 1																					
Peak Hour for Entire Intersection Begins at 04:00 PM																					
04:00 PM	1	**393**	**21**	1	416	24	14	**31**	1	70	1	346	**45**	1	393	**38**	14	40	4	96	975
04:15 PM	**5**	393	17	0	415	28	14	24	2	68	**9**	332	17	**2**	360	38	13	**46**	4	**101**	944
04:30 PM	3	391	13	0	407	29	16	31	**6**	**82**	3	**358**	40	2	**403**	34	**16**	42	**5**	97	**989**
04:45 PM	4	391	18	**4**	**417**	**39**	**22**	20	0	81	4	266	19	1	290	35	11	26	3	75	863
Total Volume	13	1568	69	5	1655	120	66	106	9	301	17	1302	121	6	1446	145	54	154	16	369	3771
% App. Total	0.8	94.7	4.2	0.3		39.9	21.9	35.2	3		1.2	90	8.4	0.4		39.3	14.6	41.7	4.3		
PHF	.650	.997	.821	.313	.992	.769	.750	.855	.375	.918	.472	.909	.672	.750	.897	.954	.844	.837	.800	.913	.953

Crossroads Engineering

8320 SW 90th Street
Miami, FL 33186
786-236-2857

CLIENT:TRAFTECH
JOB NO.:2015-024
PROJECT:HALLANDALE BEACH
COUNTY:MIAMI-DADE

File Name : SE 3RD AVE @ US 1
Site Code : 00000000
Start Date : 4/15/2015
Page No : 5

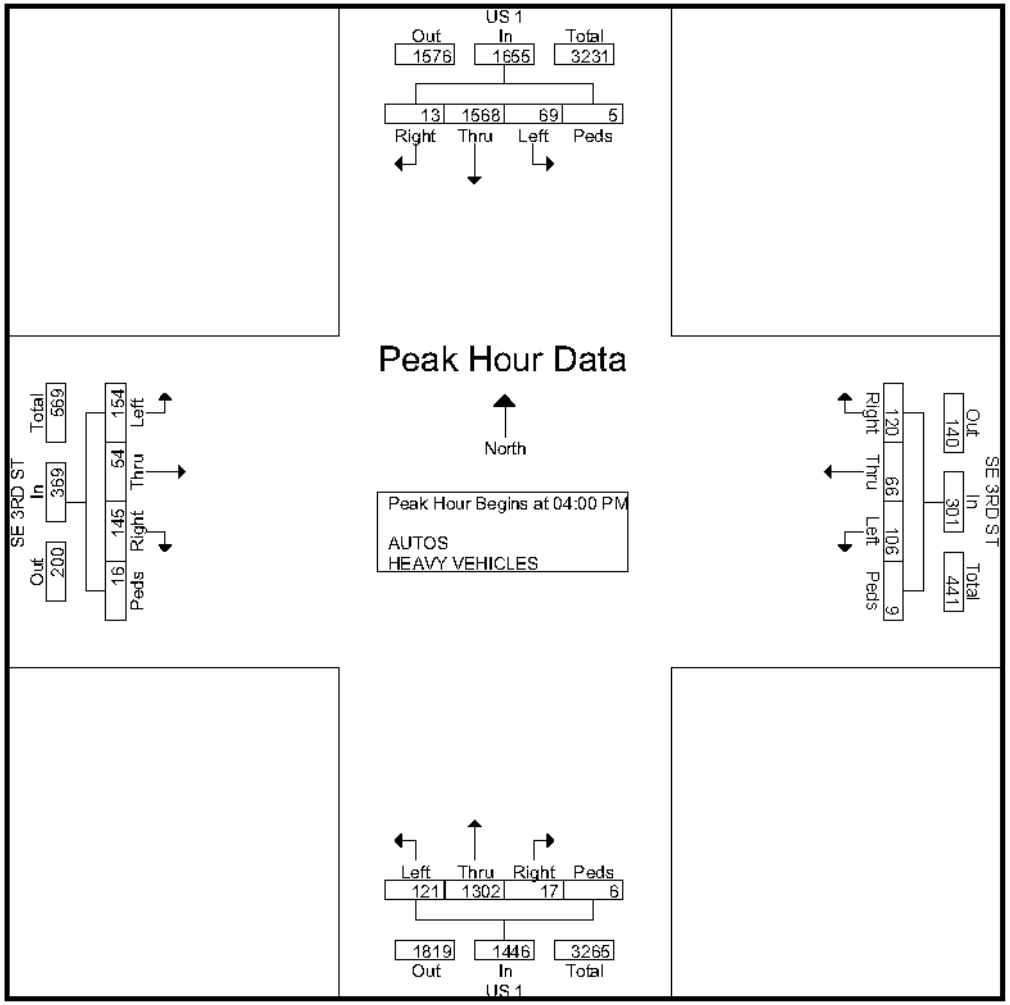

Crossroads Engineering

8320 SW 90th Street
Miami, FL 33186
786-236-2857

CLIENT:TRAFTECH
JOB NO.:2015-024
PROJECT:HALLANDALE BEACH
COUNTY:MIAMI-DADE

File Name : SE 3RD AVE @ US 1
Site Code : 00000000
Start Date : 4/15/2015
Page No : 1

Groups Printed- HEAVY VEHICLES

	US 1 From North				SE 3RD ST From East				US 1 From South				SE 3RD ST From West				
Start Time	Right	Thru	Left	Peds	Right	Thru	Left	Peds	Right	Thru	Left	Peds	Right	Thru	Left	Peds	Int. Total
07:00 AM	1	6	0	0	0	0	0	0	0	5	0	0	0	0	1	0	13
07:15 AM	0	6	0	0	0	0	0	0	1	9	0	0	0	0	1	0	17
07:30 AM	0	7	0	0	1	0	1	0	0	6	0	0	0	0	1	0	16
07:45 AM	0	11	0	0	0	0	0	0	0	5	1	0	2	0	1	0	20
Total	1	30	0	0	1	0	1	0	1	25	1	0	2	0	4	0	66
08:00 AM	0	5	0	0	0	0	1	0	0	4	0	0	0	0	0	0	10
08:15 AM	0	7	0	0	0	1	0	0	0	3	0	0	0	0	1	0	12
08:30 AM	0	10	1	0	0	0	1	0	0	4	0	0	0	0	1	0	17
08:45 AM	0	4	0	0	0	0	0	0	0	5	0	0	0	0	0	0	9
Total	0	26	1	0	0	1	2	0	0	16	0	0	0	0	2	0	48
*** BREAK ***																	
04:00 PM	0	3	0	0	0	0	0	0	0	2	1	0	0	0	0	0	6
04:15 PM	0	4	0	0	0	0	0	0	0	6	1	0	0	0	0	0	11
04:30 PM	0	6	0	0	0	0	0	0	0	5	0	0	1	0	1	0	13
04:45 PM	0	3	0	0	0	0	0	0	0	2	0	0	0	1	1	0	7
Total	0	16	0	0	0	0	0	0	0	15	2	0	1	1	2	0	37
05:00 PM	0	3	0	0	0	0	0	0	0	8	0	0	0	0	3	0	14
05:15 PM	0	4	0	0	0	0	0	0	0	5	0	0	0	0	0	0	9
05:30 PM	0	3	0	0	0	0	0	0	0	6	0	0	1	0	1	0	11
05:45 PM	0	5	0	0	0	0	0	0	0	3	0	0	0	0	0	0	8
Total	0	15	0	0	0	0	0	0	0	22	0	0	1	0	4	0	42
Grand Total	1	87	1	0	1	1	3	0	1	78	3	0	4	1	12	0	193
Apprch %	1.1	97.8	1.1	0	20	20	60	0	1.2	95.1	3.7	0	23.5	5.9	70.6	0	
Total %	0.5	45.1	0.5	0	0.5	0.5	1.6	0	0.5	40.4	1.6	0	2.1	0.5	6.2	0	

Traffic Survey Specialists, Inc.
624 Gardenia Terrace
Delray Beach, Florida 33444
Phone (561) 272-3255

HALLANDALE BEACH BOULEVARD & DIXIE
HIGHWAY, HALLANDALE BEACH, FLORIDA
COUNTED BY: ISIDRO GONZALEZ
SIGNALIZED

Site Code : 00150012
Start Date: 01/21/15
File I.D. : HBBDIX_I
Page : 1

ALL VEHICLES

	N DIXIE HIGHWAY From North				HALLANDALE BEACH BLVD From East				S DIXIE HIGHWAY From South				HALLANDALE BEACH BLVD From West				
Date 01/21/15	UTurn	Left	Thru	Right	UTurn	Left	Thru	Right	UTurn	Left	Thru	Right	UTurn	Left	Thru	Right	Total
07:00	0	21	31	4	0	7	275	0	0	0	0	0	0	0	155	9	502
07:15	0	11	47	4	0	21	309	0	0	0	0	0	0	0	221	17	630
07:30	0	31	117	10	0	26	267	0	0	0	0	0	0	0	219	6	676
07:45	0	54	99	5	0	28	263	0	0	0	0	0	0	0	261	6	716
Hr Total	0	117	294	23	0	82	1114	0	0	0	0	0	0	0	856	38	2524
08:00	0	53	127	10	0	31	341	0	0	0	0	0	0	0	312	8	882
08:15	0	55	152	11	0	15	326	0	0	0	0	0	0	0	291	9	859
08:30	0	52	143	9	0	30	362	0	0	0	0	0	0	0	324	9	929
08:45	0	58	148	8	0	29	324	0	0	0	0	0	0	0	301	8	876
Hr Total	0	218	570	38	0	105	1353	0	0	0	0	0	0	0	1228	34	3546
* BREAK *																	
16:00	0	28	65	18	0	26	516	0	0	0	0	0	0	0	257	12	922
16:15	0	40	72	20	0	19	424	0	0	0	0	0	0	0	236	12	823
16:30	0	48	72	14	0	24	484	0	0	0	0	0	0	0	286	15	943
16:45	0	35	83	21	0	20	408	0	0	0	0	0	0	0	249	10	826
Hr Total	0	151	292	73	0	89	1832	0	0	0	0	0	0	0	1028	49	3514
17:00	0	47	74	17	1	30	406	0	0	0	0	0	1	0	225	9	810
17:15	0	40	95	18	0	25	439	0	0	0	0	0	0	0	265	16	898
17:30	0	57	84	9	0	24	424	0	0	0	0	0	0	0	238	12	848
17:45	0	49	76	15	0	17	372	0	0	0	0	0	0	0	310	14	853
Hr Total	0	193	329	59	1	96	1641	0	0	0	0	0	1	0	1038	51	3409
TOTAL	0	679	1485	193	1	372	5940	0	0	0	0	0	1	0	4150	172	12993

HALLANDALE BEACH BOULEVARD & DIXIE
HIGHWAY, HALLANDALE BEACH, FLORIDA
COUNTED BY: ISIDRO GONZALEZ
SIGNALIZED

Traffic Survey Specialists, Inc.
624 Gardenia Terrace
Delray Beach, Florida 33444
Phone (561) 272-3255

Site Code : 00150012
Start Date: 01/21/15
File I.D. : HBBDIX_I
Page : 2

ALL VEHICLES

	N DIXIE HIGHWAY From North				HALLANDALE BEACH BLVD From East				S DIXIE HIGHWAY From South				HALLANDALE BEACH BLVD From West				
	UTurn	Left	Thru	Right	UTurn	Left	Thru	Right	UTurn	Left	Thru	Right	UTurn	Left	Thru	Right	Total
Date 01/21/15																	
Peak Hour Analysis By Entire Intersection for the Period: 07:00 to 09:00 on 01/21/15																	
Peak start 08:00					08:00				08:00				08:00				
Volume	0	218	570	38	0	105	1353	0	0	0	0	0	0	0	1228	34	
Percent	0%	26%	69%	5%	0%	7%	93%	0%	0%	0%	0%	0%	0%	0%	97%	3%	
Pk total	826				1458				0				1262				
Highest	08:15				08:30				07:00				08:30				
Volume	0	55	152	11	0	30	362	0	0	0	0	0	0	0	324	9	
Hi total	218				392				0				333				
PHF	.95				.93				.0				.95				

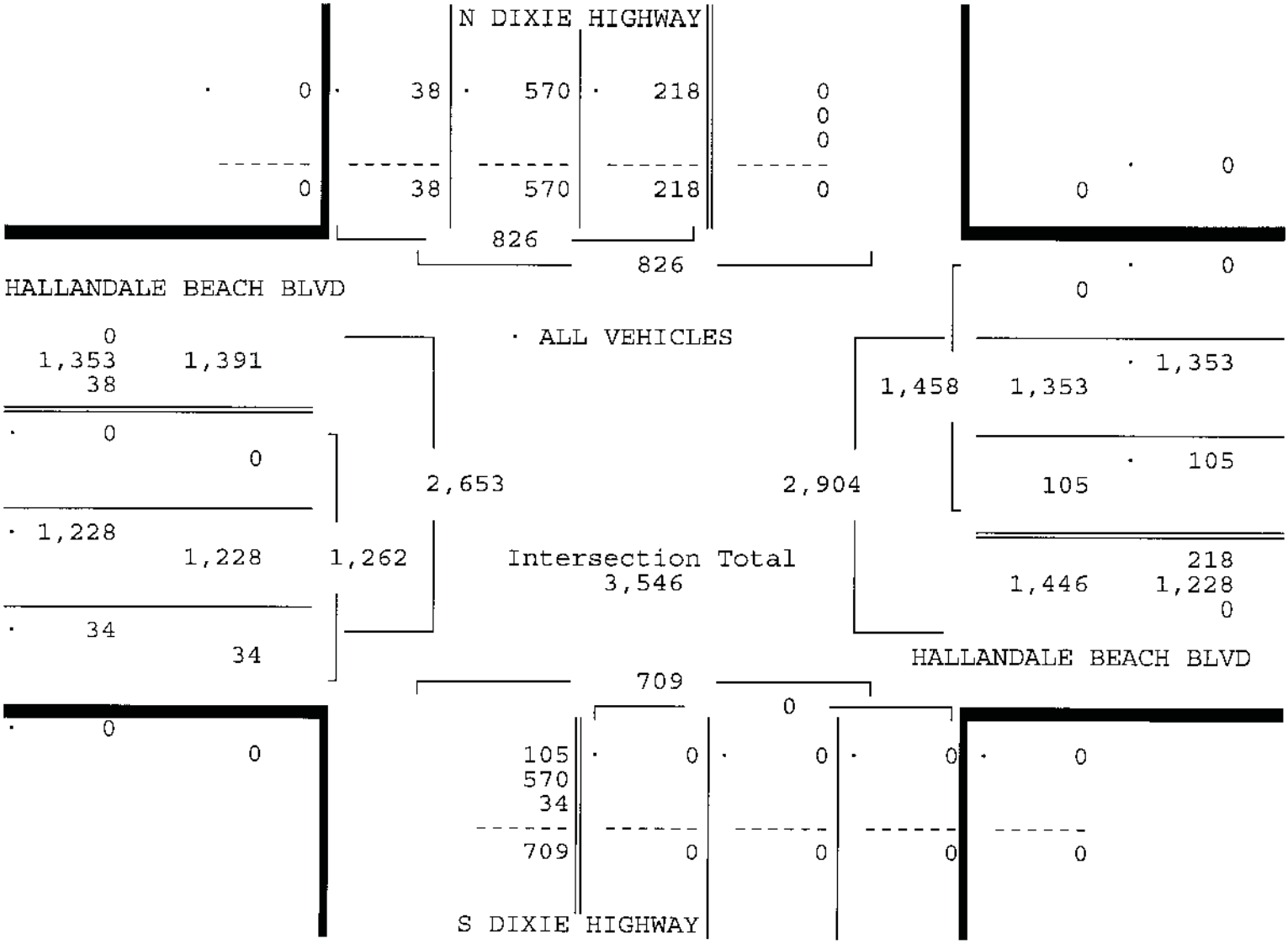

HALLANDALE BEACH BOULEVARD & DIXIE
HIGHWAY, HALLANDALE BEACH, FLORIDA
COUNTED BY: ISIDRO GONZALEZ
SIGNALIZED

Traffic Survey Specialists, Inc.
624 Gardenia Terrace
Delray Beach, Florida 33444
Phone (561) 272-3255

Site Code : 00150012
Start Date: 01/21/15
File I.D. : HBBDIX_I
Page : 3

ALL VEHICLES

	N DIXIE HIGHWAY From North				HALLANDALE BEACH BLVD From East				S DIXIE HIGHWAY From South				HALLANDALE BEACH BLVD From West				
	UTurn	Left	Thru	Right	UTurn	Left	Thru	Right	UTurn	Left	Thru	Right	UTurn	Left	Thru	Right	Total
Date 01/21/15																	
Peak Hour Analysis By Entire Intersection for the Period: 16:00 to 18:00 on 01/21/15																	
Peak start 16:00					16:00				16:00				16:00				
Volume	0	151	292	73	0	89	1832	0	0	0	0	0	0	0	1028	49	
Percent	0%	29%	57%	14%	0%	5%	95%	0%	0%	0%	0%	0%	0%	0%	95%	5%	
Pk total	516				1921				0				1077				
Highest	16:45				16:00				07:00				16:30				
Volume	0	35	83	21	0	26	516	0	0	0	0	0	0	0	286	15	
Hi total	139				542				0				301				
PHF	.93				.89				.0				.89				

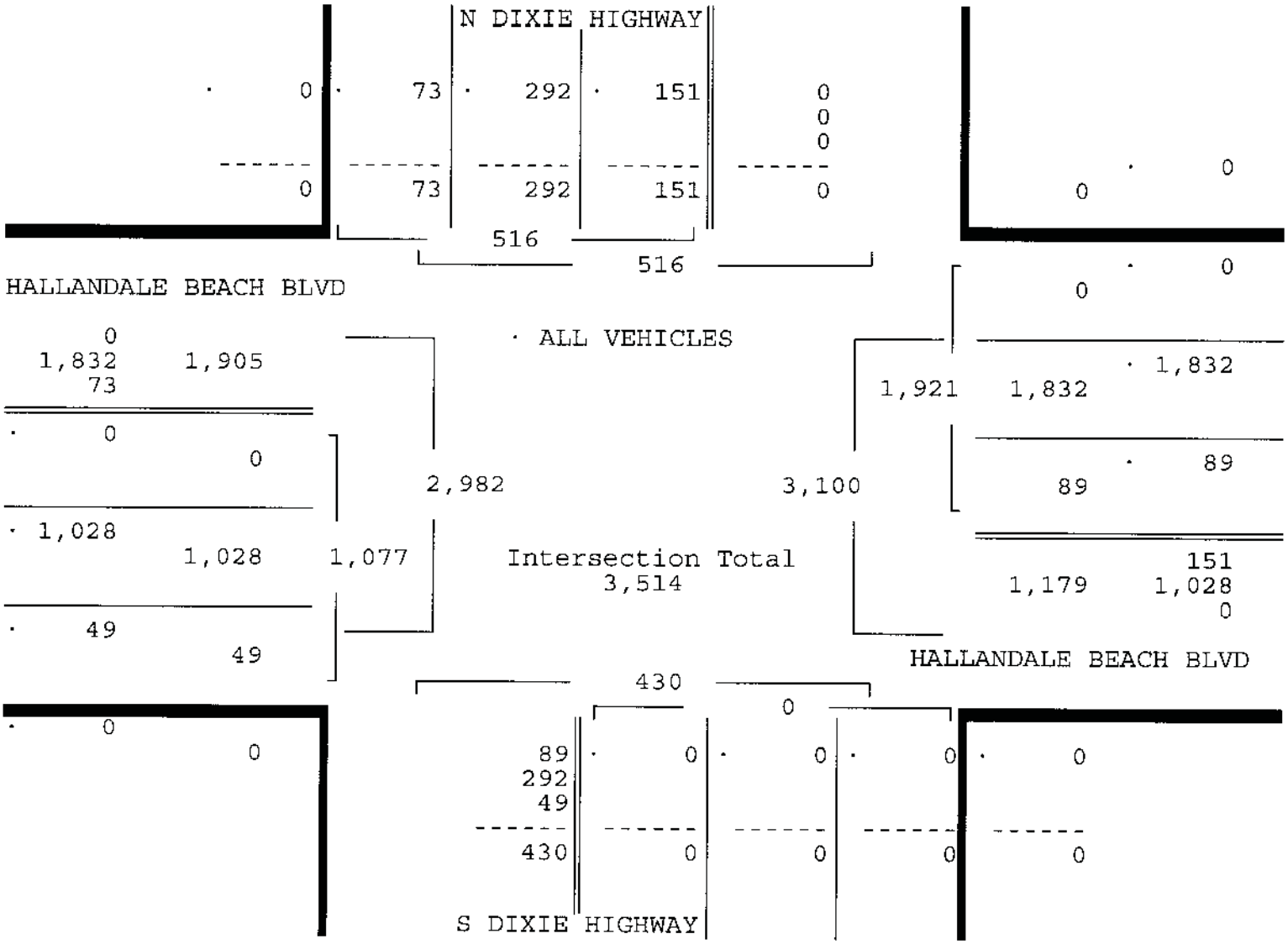
N DIXIE HIGHWAY
0
73
292
151
0
0
0
0
73
292
151
0
516
516
HALLANDALE BEACH BLVD
0
1,832
73
1,905
0
0
1,028
1,028
1,077
49
49
2,982
ALL VEHICLES
Intersection Total
3,514
3,100
1,921
1,832
0
0
1,832
89
89
151
1,179
1,028
0
HALLANDALE BEACH BLVD
430
0
0
0
0

HALLANDALE BEACH BOULEVARD & DIXIE
HIGHWAY, HALLANDALE BEACH, FLORIDA
COUNTED BY: ISIDRO GONZALEZ
SIGNALIZED

Traffic Survey Specialists, Inc.
624 Gardenia Terrace
Delray Beach, Florida 33444
Phone (561) 272-3255

Site Code : 00150012
Start Date: 01/21/15
File I.D. : HBBDIX_I
Page : 1

PEDESTRIANS & BIKES

	N DIXIE HIGHWAY From North				HALLANDALE BEACH BLVD From East				S DIXIE HIGHWAY From South				HALLANDALE BEACH BLVD From West				
Date 01/21/15	Left	BIKES	Right	Peds	Left	BIKES	Right	Peds	Left	BIKES	Right	Peds	Left	BIKES	Right	Peds	Total
07:00	0	0	0	0	0	0	0	1	0	1	0	2	0	0	0	0	4
07:15	0	3	0	4	0	0	0	0	0	4	0	2	0	1	0	2	16
07:30	0	0	0	0	0	0	0	0	0	2	0	2	0	0	0	1	5
07:45	0	2	0	4	0	1	0	0	0	3	0	1	0	0	0	1	12
Hr Total	0	5	0	8	0	1	0	1	0	10	0	7	0	1	0	4	37
08:00	0	2	0	0	0	0	0	0	0	0	0	2	0	0	0	0	4
08:15	0	3	0	6	0	0	0	0	0	1	0	0	0	0	0	0	10
08:30	0	0	0	2	0	0	0	0	0	1	0	2	0	0	0	0	5
08:45	0	3	0	0	0	0	0	0	0	0	0	0	0	0	0	0	3
Hr Total	0	8	0	8	0	0	0	0	0	2	0	4	0	0	0	0	22
* BREAK *																	
16:00	0	7	0	6	0	0	0	0	0	3	0	0	0	0	0	0	16
16:15	0	1	0	6	0	0	0	0	0	7	0	4	0	0	0	1	19
16:30	0	2	0	5	0	1	0	0	0	1	0	2	0	0	0	3	14
16:45	0	2	0	8	0	0	0	0	0	2	0	1	0	1	0	0	14
Hr Total	0	12	0	25	0	1	0	0	0	13	0	7	0	1	0	4	63
17:00	0	9	0	11	0	0	0	0	0	1	0	1	0	1	0	2	25
17:15	0	3	0	3	0	0	0	0	0	4	0	1	0	0	0	1	14
17:30	0	0	0	1	0	1	0	0	0	3	0	1	0	1	0	1	8
17:45	0	3	0	5	0	0	0	0	0	0	0	0	0	1	0	1	10
Hr Total	0	15	0	20	0	1	0	0	0	8	0	3	0	5	0	5	57
TOTAL	0	40	0	61	0	3	0	1	0	33	0	21	0	7	0	13	179

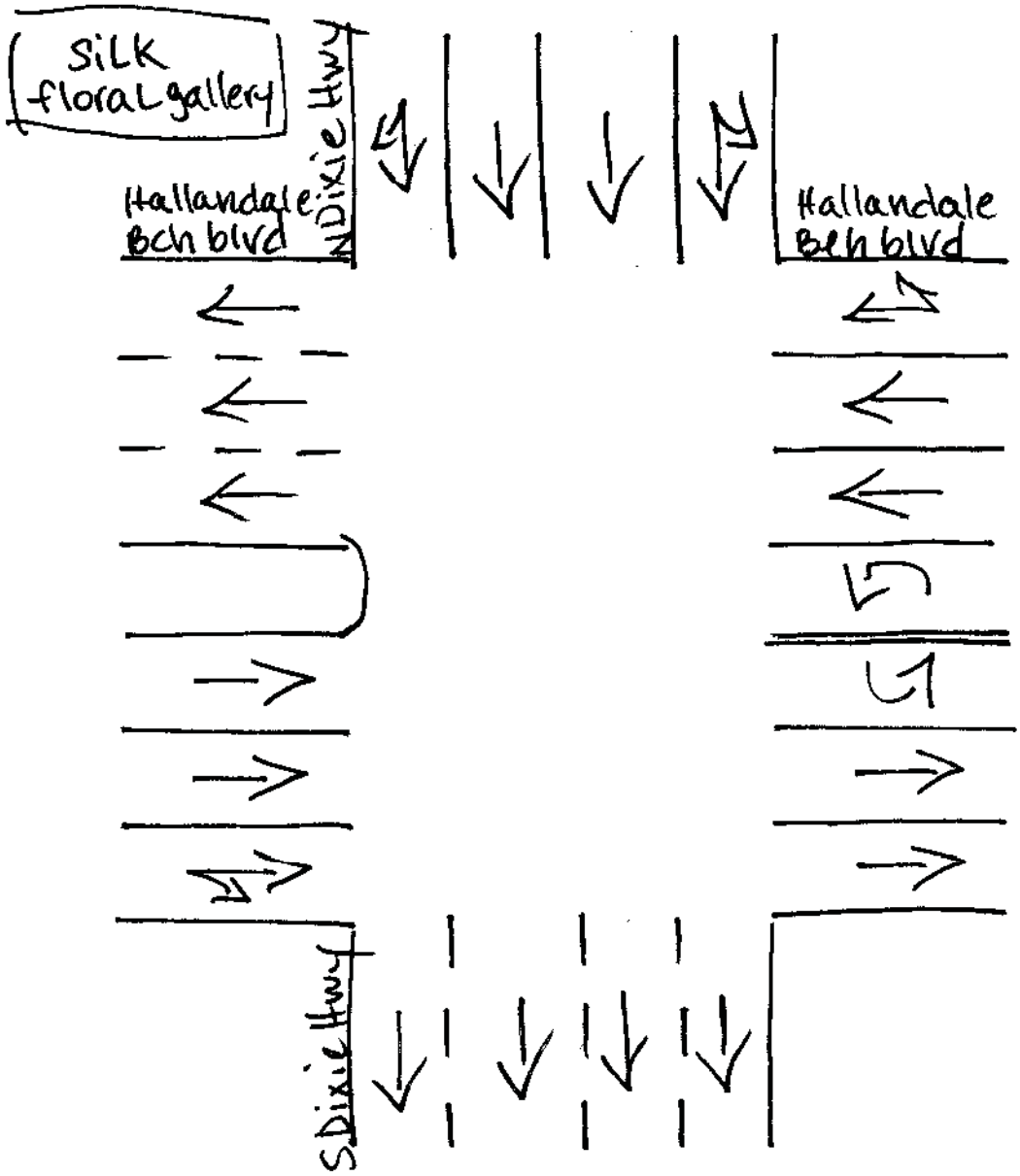

Hallandale Beach, Florida
January 21, 2015
drawn by: Luis Palomino
signalized

HALLANDALE BEACH BOULEVARD & NE/SE 1ST AVENUE, HALLANDALE BEACH, FLORIDA
COUNTED BY: SEBASTIAN SALVO
SIGNALIZED

Traffic Survey Specialists, Inc.
624 Gardenia Terrace
Delray Beach, Florida 33444
Phone (561) 272 3255

Site Code : 00150012
Start Date: 01/21/15
File I.D. : HBBDIX_S
Page : 1

ALL VEHICLES

	NE 1ST AVENUE From North				HALLANDALE BEACH BLVD From East				SE 1ST AVENUE From South				HALLANDALE BEACH BLVD From West				
	UTurn	Left	Thru	Right	UTurn	Left	Thru	Right	UTurn	Left	Thru	Right	UTurn	Left	Thru	Right	Total
Date 01/21/15																	
07:00	0	0	0	0	0	0	267	3	0	20	8	6	0	3	179	0	486
07:15	0	0	0	0	0	0	306	6	0	22	19	9	0	4	232	0	598
07:30	0	0	0	0	0	0	266	3	0	28	29	2	0	2	247	0	577
07:45	0	0	0	0	0	0	268	3	0	29	23	9	0	7	308	0	647
Hr Total	0	0	0	0	0	0	1107	15	0	99	79	26	0	16	966	0	2308
08:00	0	0	0	0	0	0	331	3	0	39	33	12	0	7	348	0	773
08:15	0	0	0	0	0	0	305	6	0	41	36	22	0	10	345	0	765
08:30	0	0	0	0	0	0	341	6	0	51	30	16	0	6	368	0	818
08:45	0	0	0	0	0	0	303	7	0	43	33	16	2	5	341	0	750
Hr Total	0	0	0	0	0	0	1280	22	0	174	132	66	2	28	1402	0	3106
* BREAK *																	
16:00	0	0	0	0	0	0	463	12	0	83	67	23	0	6	274	0	928
16:15	0	0	0	0	1	0	368	9	0	80	89	26	0	8	271	0	852
16:30	0	0	0	0	0	0	427	4	0	73	79	23	0	20	310	0	936
16:45	0	0	0	0	0	0	350	10	0	74	94	21	0	12	266	0	827
Hr Total	0	0	0	0	1	0	1608	35	0	310	329	93	0	46	1121	0	3543
17:00	0	0	0	0	0	0	374	10	0	67	89	26	0	10	266	0	842
17:15	0	0	0	0	0	0	381	12	0	78	86	22	0	7	298	0	884
17:30	0	0	0	0	0	0	358	9	0	88	91	22	0	11	282	0	861
17:45	0	0	0	0	1	0	337	10	0	51	62	15	0	9	353	0	838
Hr Total	0	0	0	0	1	0	1450	41	0	284	328	85	0	37	1199	0	3425
TOTAL	0	0	0	0	2	0	5445	113	0	867	868	270	2	127	4688	0	12382

HALLANDALE BEACH BOULEVARD & NE/SE 1ST AVENUE, HALLANDALE BEACH, FLORIDA
COUNTED BY: SEBASTIAN SALVO
SIGNALIZED

Traffic Survey Specialists, Inc.
624 Gardenia Terrace
Delray Beach, Florida 33444
Phone (561) 272-3255

Site Code : 00150012
Start Date: 01/21/15
File I.D. : HBBDIX_S
Page : 2

ALL VEHICLES

	NE 1ST AVENUE From North				HALLANDALE BEACH BLVD From East				SE 1ST AVENUE From South				HALLANDALE BEACH BLVD From West				
	UTurn	Left	Thru	Right	UTurn	Left	Thru	Right	UTurn	Left	Thru	Right	UTurn	Left	Thru	Right	Total
Date 01/21/15																	
Peak Hour Analysis By Entire Intersection for the Period: 07:00 to 09:00 on 01/21/15																	
Peak start	08:00				08:00				08:00				08:00				
Volume	0	0	0	0	0	0	1280	22	0	174	132	66	2	28	1402	0	
Percent	0%	0%	0%	0%	0%	0%	98%	2%	0%	47%	35%	18%	0%	2%	98%	0%	
Pk total	0				1302				372				1432				
Highest	07:00				08:30				08:15				08:30				
Volume	0	0	0	0	0	0	341	6	0	41	36	22	0	6	368	0	
Hi total	0				347				99				374				
PHF	.0				.94				.94				.96				

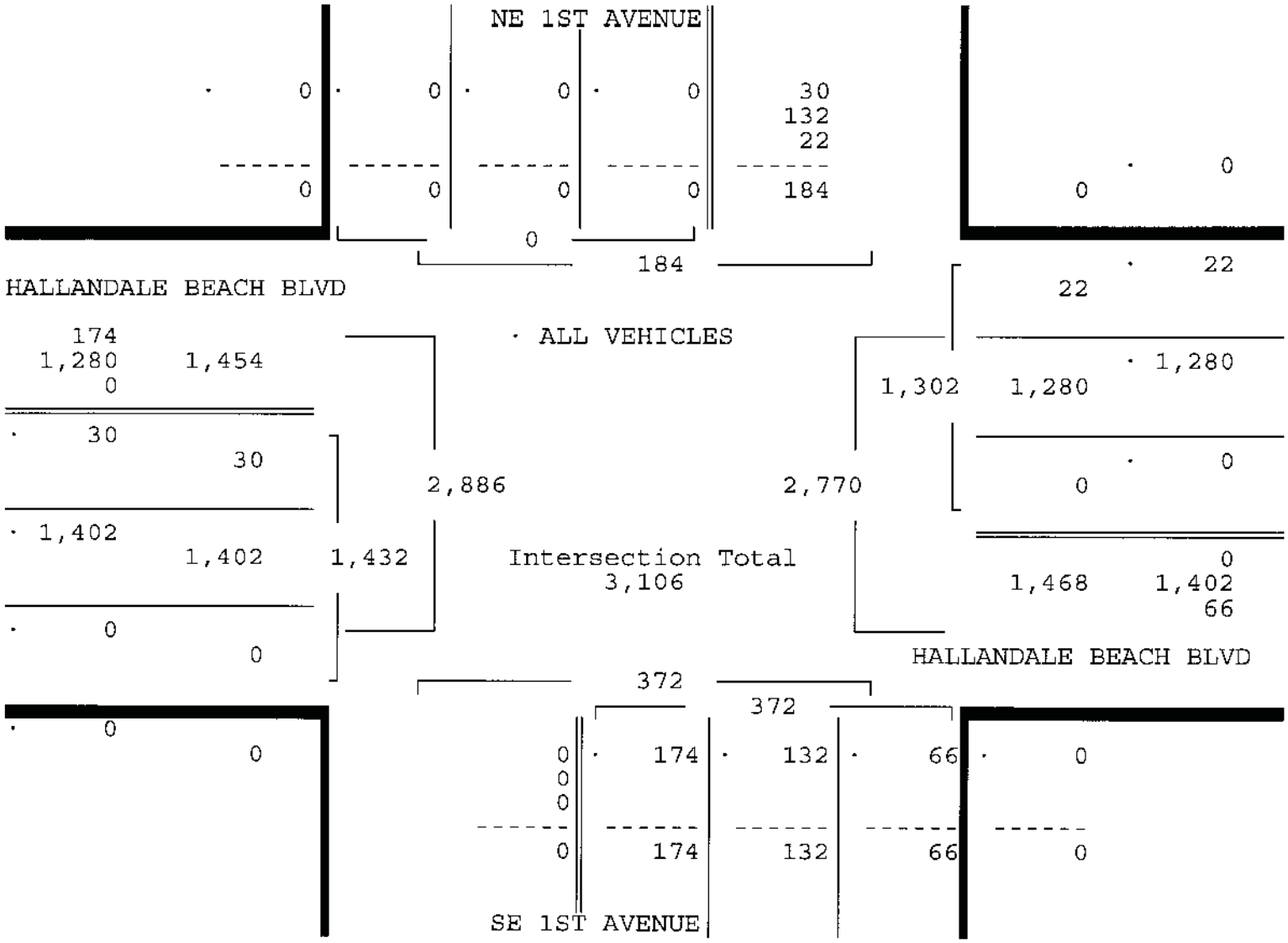

HALLANDALE BEACH BOULEVARD & NE/SE 1ST AVENUE, HALLANDALE BEACH, FLORIDA
COUNTED BY: SEBASTIAN SALVO
SIGNALIZED

Traffic Survey Specialists, Inc.
624 Gardenia Terrace
Delray Beach, Florida 33444
Phone (561) 272-3255

Site Code : 00150012
Start Date: 01/21/15
File I.D. : HBBDIX_S
Page : 3

ALL VEHICLES

	NE 1ST AVENUE From North				HALLANDALE BEACH BLVD From East				SE 1ST AVENUE From South				HALLANDALE BEACH BLVD From West				
	UTurn	Left	Thru	Right	UTurn	Left	Thru	Right	UTurn	Left	Thru	Right	UTurn	Left	Thru	Right	Total
Date 01/21/15																	
Peak Hour Analysis By Entire Intersection for the Period: 16:00 to 18:00 on 01/21/15																	
Peak start 16:00					16:00				16:00				16:00				
Volume	0	0	0	0	1	0	1608	35	0	310	329	93	0	46	1121	0	
Percent	0%	0%	0%	0%	0%	0%	98%	2%	0%	42%	45%	13%	0%	4%	96%	0%	
Pk total	0				1644				732				1167				
Highest	07:00				16:00				16:15				16:30				
Volume	0	0	0	0	0	0	463	12	0	80	89	26	0	20	310	0	
Hi total	0				475				195				330				
PHF	.0				.87				.94				.88				

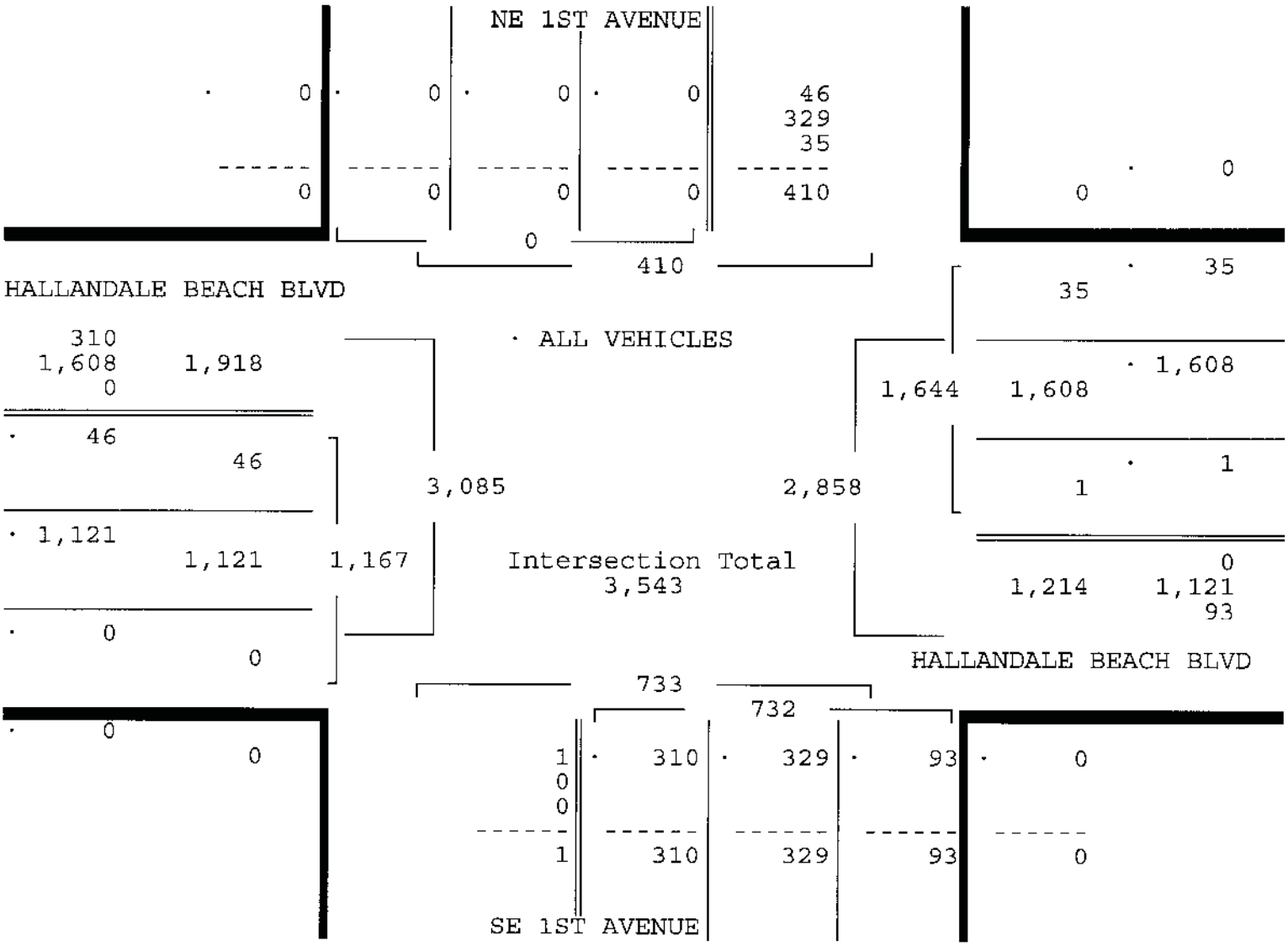

Traffic Survey Specialists, Inc.
624 Gardenia Terrace
Delray Beach, Florida 33444
Phone (561) 272-3255

HALLANDALE BEACH BOULEVARD & NE/SE 1ST AVENUE, HALLANDALE BEACH, FLORIDA
COUNTED BY: SEBASTIAN SALVO
SIGNALIZED

Site Code : 00150012
Start Date: 01/21/15
File I.D. : HBBDIX_S
Page : 1

PEDESTRIANS & BIKES

	NE 1ST AVENUE From North				HALLANDALE BEACH BLVD From East				SE 1ST AVENUE From South				HALLANDALE BEACH BLVD From West				
	Left	BIKES	Right	Peds	Left	BIKES	Right	Peds	Left	BIKES	Right	Peds	Left	BIKES	Right	Peds	Total
Date 01/21/15																	
07:00	0	0	0	0	0	1	0	0	0	1	0	2	0	0	0	0	4
07:15	0	2	0	3	0	0	0	0	0	3	0	0	0	0	0	0	8
07:30	0	0	0	0	0	0	0	0	0	1	0	3	0	0	0	0	4
07:45	0	2	0	3	0	1	0	1	0	2	0	0	0	0	0	0	9
Hr Total	0	4	0	6	0	2	0	1	0	7	0	5	0	0	0	0	25
08:00	0	1	0	1	0	0	0	0	0	0	0	2	0	0	0	0	4
08:15	0	3	0	2	0	0	0	4	0	1	0	1	0	0	0	0	11
08:30	0	2	0	0	0	0	0	0	0	1	0	0	0	0	0	0	3
08:45	0	3	0	1	0	1	0	0	0	0	0	0	0	0	0	0	5
Hr Total	0	9	0	4	0	1	0	4	0	2	0	3	0	0	0	0	23
* BREAK *																	
16:00	0	8	0	10	0	0	0	0	0	4	0	0	0	0	0	0	22
16:15	0	1	0	3	0	0	0	0	0	1	0	1	0	0	0	0	6
16:30	0	1	0	3	0	0	0	0	0	3	0	1	0	0	0	0	8
16:45	0	2	0	5	0	0	0	1	0	0	0	2	0	0	0	0	10
Hr Total	0	12	0	21	0	0	0	1	0	8	0	4	0	0	0	0	46
17:00	0	4	0	5	0	0	0	0	0	1	0	0	0	0	0	0	10
17:15	0	3	0	5	0	0	0	1	0	2	0	1	0	0	0	0	12
17:30	0	1	0	3	0	0	0	1	0	1	0	1	0	0	0	0	7
17:45	0	1	0	5	0	0	0	2	0	0	0	0	0	0	0	0	8
Hr Total	0	9	0	18	0	0	0	4	0	4	0	2	0	0	0	0	37
TOTAL	0	34	0	49	0	3	0	10	0	21	0	14	0	0	0	0	131

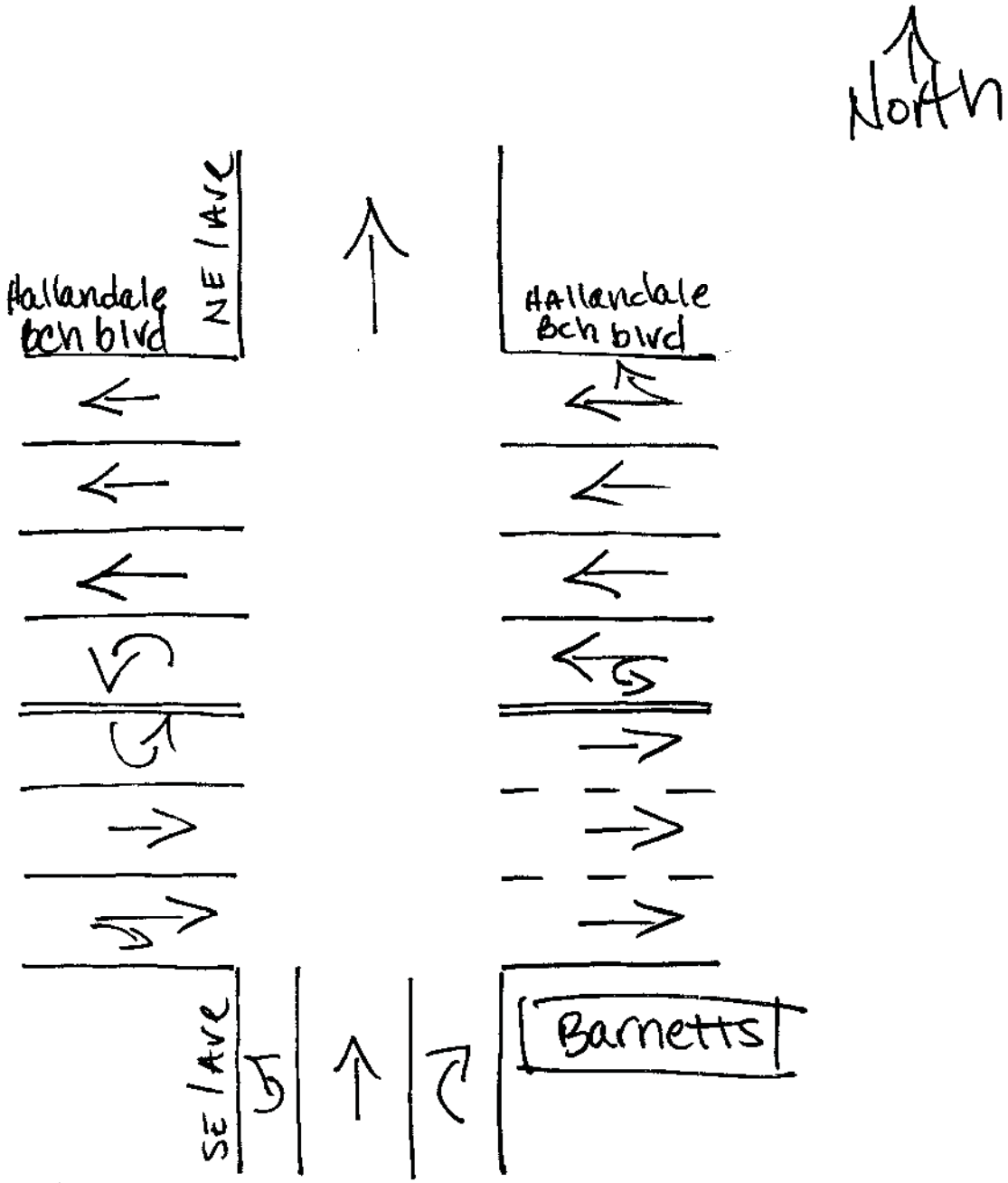

Hallandale Beach, Florida
January 21, 2015
drawn by: Luis Palomino
signalized

Crossroads Engineering

8320 SW 90th Street
Miami, FL 33186
786-236-2857

CLIENT:TRAFTECH
JOB NO.:2015-024
PROJECT:HALLANDALE BEACH
COUNTY:MIAMI-DADE

File Name : NE 8TH AVE @ HALLANDALE BCH BLVD
Site Code : 00000000
Start Date : 4/15/2015
Page No : 1

Groups Printed- AUTOS - HEAVY VEHICLES

	NE 8TH AVE From North				HALLANDALE BCH BLVD From East				SE 8TH AVE From South				HALLANDALE BCH BLVD From West				
Start Time	Right	Thru	Left	Peds	Right	Thru	Left	Peds	Right	Thru	Left	Peds	Right	Thru	Left	Peds	Int. Total
07:00 AM	19	0	10	3	0	329	0	0	2	0	0	2	0	274	0	0	639
07:15 AM	16	0	18	5	0	269	0	1	1	0	0	3	0	255	0	1	569
07:30 AM	41	0	16	3	0	327	1	1	1	0	0	2	0	334	0	0	726
07:45 AM	36	0	15	1	0	199	0	1	3	0	0	0	4	335	0	0	594
Total	112	0	59	12	0	1124	1	3	7	0	0	7	4	1198	0	1	2528
08:00 AM	40	0	40	1	0	319	3	0	5	0	1	7	3	342	0	0	761
08:15 AM	45	0	33	2	0	332	7	0	3	0	4	3	4	396	0	0	829
08:30 AM	49	0	23	3	0	363	5	0	8	0	5	4	5	394	0	0	859
08:45 AM	40	0	65	2	0	322	4	0	8	0	2	6	8	464	0	0	921
Total	174	0	161	8	0	1336	19	0	24	0	12	20	20	1596	0	0	3370
*** BREAK ***																	
04:00 PM	15	0	40	6	0	414	2	0	20	0	11	3	1	366	0	0	878
04:15 PM	29	0	33	4	1	485	5	0	8	0	1	1	3	381	0	0	951
04:30 PM	43	0	27	2	0	379	0	0	12	0	9	6	3	364	0	1	846
04:45 PM	27	0	40	5	0	392	2	0	10	0	4	6	2	370	0	0	858
Total	114	0	140	17	1	1670	9	0	50	0	25	16	9	1481	0	1	3533
05:00 PM	22	1	32	8	0	418	2	3	9	0	6	12	6	354	0	1	874
05:15 PM	34	1	36	10	0	471	8	0	11	0	8	8	7	339	0	0	933
05:30 PM	31	2	26	7	0	443	5	2	13	0	6	5	7	389	0	0	936
05:45 PM	30	0	34	6	0	364	11	0	15	0	0	5	0	366	0	0	831
Total	117	4	128	31	0	1696	26	5	48	0	20	30	20	1448	0	1	3574
Grand Total	517	4	488	68	1	5826	55	8	129	0	57	73	53	5723	0	3	13005
Apprch %	48	0.4	45.3	6.3	0	98.9	0.9	0.1	49.8	0	22	28.2	0.9	99	0	0.1	
Total %	4	0	3.8	0.5	0	44.8	0.4	0.1	1	0	0.4	0.6	0.4	44	0	0	
AUTOS	515	4	485	68	1	5753	55	8	128	0	57	73	53	5642	0	3	12845
% AUTOS	99.6	100	99.4	100	100	98.7	100	100	99.2	0	100	100	100	98.6	0	100	98.8
HEAVY VEHICLES	2	0	3	0	0	73	0	0	1	0	0	0	0	81	0	0	160
% HEAVY VEHICLES	0.4	0	0.6	0	0	1.3	0	0	0.8	0	0	0	0	1.4	0	0	1.2

Crossroads Engineering

8320 SW 90th Street
Miami, FL 33186
786-236-2857

CLIENT:TRAFTECH
JOB NO.:2015-024
PROJECT:HALLANDALE BEACH
COUNTY:MIAMI-DADE

File Name : NE 8TH AVE @ HALLANDALE BCH BLVD
Site Code : 00000000
Start Date : 4/15/2015
Page No : 2

	NE 8TH AVE From North					HALLANDALE BCH BLVD From East					SE 8TH AVE From South					HALLANDALE BCH BLVD From West					
Start Time	Right	Thru	Left	Peds	App. Total	Right	Thru	Left	Peds	App. Total	Right	Thru	Left	Peds	App. Total	Right	Thru	Left	Peds	App. Total	Int. Total
Peak Hour Analysis From 07:00 AM to 08:45 AM - Peak 1 of 1																					
Peak Hour for Entire Intersection Begins at 08:00 AM																					
08:00 AM	40	0	40	1	81	0	319	3	0	322	5	0	1	7	13	3	342	0	0	345	761
08:15 AM	45	0	33	2	80	0	332	7	0	339	3	0	4	3	10	4	396	0	0	400	829
08:30 AM	49	0	23	3	75	0	363	5	0	368	8	0	5	4	17	5	394	0	0	399	859
08:45 AM	40	0	65	2	107	0	322	4	0	326	8	0	2	6	16	8	464	0	0	472	921
Total Volume	174	0	161	8	343	0	1336	19	0	1355	24	0	12	20	56	20	1596	0	0	1616	3370
% App. Total	50.7	0	46.9	2.3		0	98.6	1.4	0		42.9	0	21.4	35.7		1.2	98.8	0	0		
PHF	.888	.000	.619	.667	.801	.000	.920	.679	.000	.921	.750	.000	.600	.714	.824	.625	.860	.000	.000	.856	.915

Crossroads Engineering

8320 SW 90th Street
Miami, FL 33186
786-236-2857

CLIENT:TRAFTECH
JOB NO.:2015-024
PROJECT:HALLANDALE BEACH
COUNTY:MIAMI-DADE

File Name : NE 8TH AVE @ HALLANDALE BCH BLVD
Site Code : 00000000
Start Date : 4/15/2015
Page No : 3

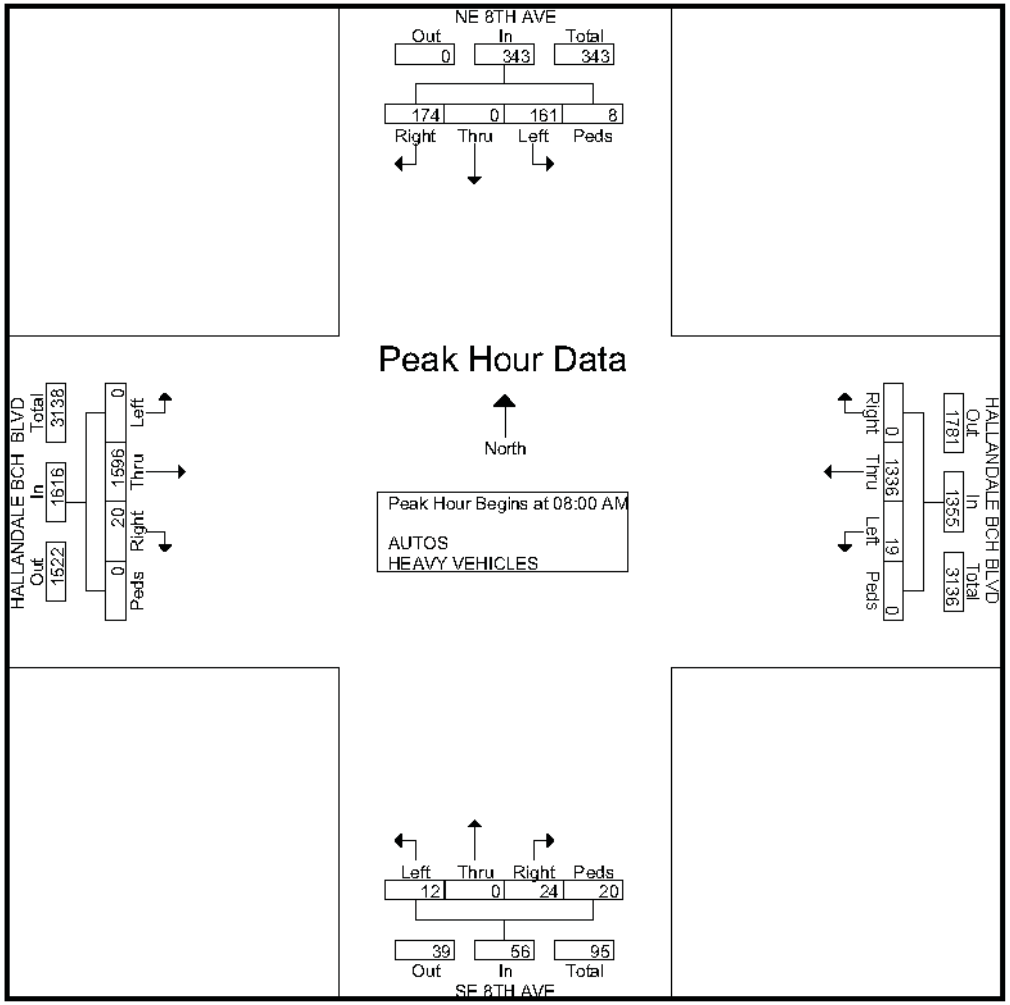

Crossroads Engineering

8320 SW 90th Street
Miami, FL 33186
786-236-2857

CLIENT:TRAFTECH
JOB NO.:2015-024
PROJECT:HALLANDALE BEACH
COUNTY:MIAMI-DADE

File Name : NE 8TH AVE @ HALLANDALE BCH BLVD
Site Code : 00000000
Start Date : 4/15/2015
Page No : 4

	NE 8TH AVE From North					HALLANDALE BCH BLVD From East					SE 8TH AVE From South					HALLANDALE BCH BLVD From West					
Start Time	Right	Thru	Left	Peds	App. Total	Right	Thru	Left	Peds	App. Total	Right	Thru	Left	Peds	App. Total	Right	Thru	Left	Peds	App. Total	Int. Total
Peak Hour Analysis From 04:00 PM to 05:45 PM - Peak 1 of 1																					
Peak Hour for Entire Intersection Begins at 04:45 PM																					
04:45 PM	27	0	**40**	5	72	0	392	2	0	394	10	0	4	6	20	2	370	0	0	372	858
05:00 PM	22	1	32	8	63	0	418	2	**3**	423	9	0	6	**12**	**27**	6	354	0	**1**	361	874
05:15 PM	**34**	1	36	**10**	**81**	0	**471**	**8**	0	**479**	11	0	**8**	8	27	**7**	339	0	0	346	933
05:30 PM	31	**2**	26	7	66	0	443	5	2	450	**13**	0	6	5	24	7	**389**	0	0	**396**	**936**
Total Volume	114	4	134	30	282	0	1724	17	5	1746	43	0	24	31	98	22	1452	0	1	1475	3601
% App. Total	40.4	1.4	47.5	10.6		0	98.7	1	0.3		43.9	0	24.5	31.6		1.5	98.4	0	0.1		
PHF	.838	.500	.838	.750	.870	.000	.915	.531	.417	.911	.827	.000	.750	.646	.907	.786	.933	.000	.250	.931	.962

Crossroads Engineering

8320 SW 90th Street
Miami, FL 33186
786-236-2857

CLIENT:TRAFTECH
JOB NO.:2015-024
PROJECT:HALLANDALE BEACH
COUNTY:MIAMI-DADE

File Name : NE 8TH AVE @ HALLANDALE BCH BLVD
Site Code : 00000000
Start Date : 4/15/2015
Page No : 1

Groups Printed- HEAVY VEHICLES

	NE 8TH AVE From North				HALLANDALE BCH BLVD From East				SE 8TH AVE From South				HALLANDALE BCH BLVD From West				
Start Time	Right	Thru	Left	Peds	Right	Thru	Left	Peds	Right	Thru	Left	Peds	Right	Thru	Left	Peds	Int. Total
07:00 AM	0	0	0	0	0	3	0	0	0	0	0	0	0	5	0	0	8
07:15 AM	0	0	0	0	0	3	0	0	0	0	0	0	0	9	0	0	12
07:30 AM	1	0	0	0	0	6	0	0	0	0	0	0	0	9	0	0	16
07:45 AM	0	0	0	0	0	5	0	0	1	0	0	0	0	5	0	0	11
Total	1	0	0	0	0	17	0	0	1	0	0	0	0	28	0	0	47
08:00 AM	0	0	0	0	0	4	0	0	0	0	0	0	0	4	0	0	8
08:15 AM	1	0	2	0	0	7	0	0	0	0	0	0	0	12	0	0	22
08:30 AM	0	0	0	0	0	6	0	0	0	0	0	0	0	4	0	0	10
08:45 AM	0	0	1	0	0	1	0	0	0	0	0	0	0	11	0	0	13
Total	1	0	3	0	0	18	0	0	0	0	0	0	0	31	0	0	53
*** BREAK ***																	
04:00 PM	0	0	0	0	0	10	0	0	0	0	0	0	0	5	0	0	15
04:15 PM	0	0	0	0	0	7	0	0	0	0	0	0	0	0	0	0	7
04:30 PM	0	0	0	0	0	4	0	0	0	0	0	0	0	4	0	0	8
04:45 PM	0	0	0	0	0	4	0	0	0	0	0	0	0	3	0	0	7
Total	0	0	0	0	0	25	0	0	0	0	0	0	0	12	0	0	37
05:00 PM	0	0	0	0	0	5	0	0	0	0	0	0	0	5	0	0	10
05:15 PM	0	0	0	0	0	3	0	0	0	0	0	0	0	0	0	0	3
05:30 PM	0	0	0	0	0	1	0	0	0	0	0	0	0	2	0	0	3
05:45 PM	0	0	0	0	0	4	0	0	0	0	0	0	0	3	0	0	7
Total	0	0	0	0	0	13	0	0	0	0	0	0	0	10	0	0	23
Grand Total	2	0	3	0	0	73	0	0	1	0	0	0	0	81	0	0	160
Apprch %	40	0	60	0	0	100	0	0	100	0	0	0	0	100	0	0	
Total %	1.2	0	1.9	0	0	45.6	0	0	0.6	0	0	0	0	50.6	0	0	

Crossroads Engineering

8320 SW 90th Street
Miami, FL 33186
786-236-2857

CLIENT:TRAFTECH
JOB NO.:2015-024
PROJECT:HALLANDALE BEACH
COUNTY:MIAMI-DADE

File Name : NE 10TH AVE @ HALLANDALE BCH BLVD
Site Code : 00000000
Start Date : 4/15/2015
Page No : 1

Groups Printed- AUTOS - HEAVY VEHICLES

	NE 10TH AVE From North				HALLANDALE BCH BLVD From East				SE 10TH AVE From South				HALLANDALE BCH BLVD From West				
Start Time	Right	Thru	Left	Peds	Right	Thru	Left	Peds	Right	Thru	Left	Peds	Right	Thru	Left	Peds	Int. Total
07:00 AM	0	0	0	1	4	257	7	0	6	4	4	4	13	227	8	0	535
07:15 AM	0	0	0	5	7	279	7	0	10	1	6	3	12	264	5	0	599
07:30 AM	0	0	0	4	3	293	6	2	6	2	8	5	11	342	6	0	688
07:45 AM	0	0	0	0	10	321	7	1	12	2	4	6	12	331	12	0	718
Total	0	0	0	10	24	1150	27	3	34	9	22	18	48	1164	31	0	2540
08:00 AM	0	0	0	2	16	345	14	0	23	3	6	4	12	365	7	0	797
08:15 AM	0	0	0	3	8	315	24	0	22	1	6	2	6	409	11	0	807
08:30 AM	0	0	0	3	18	330	27	0	14	6	10	4	11	428	23	0	874
08:45 AM	0	0	0	3	13	306	39	1	43	6	12	4	15	387	37	0	866
Total	0	0	0	11	55	1296	104	1	102	16	34	14	44	1589	78	0	3344
*** BREAK ***																	
04:00 PM	0	0	0	4	21	420	34	6	45	27	11	10	12	337	18	2	947
04:15 PM	0	0	0	5	17	416	26	2	55	26	14	2	4	370	29	1	967
04:30 PM	0	0	0	3	18	411	41	2	44	22	18	4	9	399	36	0	1007
04:45 PM	0	0	0	5	34	353	39	4	65	35	22	6	18	387	29	1	998
Total	0	0	0	17	90	1600	140	14	209	110	65	22	43	1493	112	4	3919
05:00 PM	0	0	0	5	18	418	86	5	74	72	19	10	10	367	32	1	1117
05:15 PM	0	0	0	11	28	440	56	3	83	47	17	7	9	306	26	1	1034
05:30 PM	0	0	0	11	16	409	37	9	59	32	13	11	13	397	37	1	1045
05:45 PM	0	0	0	14	22	348	56	2	60	48	14	5	9	360	46	0	984
Total	0	0	0	41	84	1615	235	19	276	199	63	33	41	1430	141	3	4180
Grand Total	0	0	0	79	253	5661	506	37	621	334	184	87	176	5676	362	7	13983
Apprch %	0	0	0	100	3.9	87.7	7.8	0.6	50.7	27.2	15	7.1	2.8	91.2	5.8	0.1	
Total %	0	0	0	0.6	1.8	40.5	3.6	0.3	4.4	2.4	1.3	0.6	1.3	40.6	2.6	0.1	
AUTOS	0	0	0	79	248	5590	505	37	617	334	172	87	165	5594	359	7	13794
% AUTOS	0	0	0	100	98	98.7	99.8	100	99.4	100	93.5	100	93.8	98.6	99.2	100	98.6
HEAVY VEHICLES	0	0	0	0	5	71	1	0	4	0	12	0	11	82	3	0	189
% HEAVY VEHICLES	0	0	0	0	2	1.3	0.2	0	0.6	0	6.5	0	6.2	1.4	0.8	0	1.4

Crossroads Engineering

8320 SW 90th Street
Miami, FL 33186
786-236-2857

CLIENT:TRAFTECH
JOB NO.:2015-024
PROJECT:HALLANDALE BEACH
COUNTY:MIAMI-DADE

File Name : NE 10TH AVE @ HALLANDALE BCH BLVD
Site Code : 00000000
Start Date : 4/15/2015
Page No : 3

	NE 10TH AVE From North					HALLANDALE BCH BLVD From East					SE 10TH AVE From South					HALLANDALE BCH BLVD From West					
Start Time	Right	Thru	Left	Peds	App. Total	Right	Thru	Left	Peds	App. Total	Right	Thru	Left	Peds	App. Total	Right	Thru	Left	Peds	App. Total	Int. Total
Peak Hour Analysis From 07:00 AM to 08:45 AM - Peak 1 of 1																					
Peak Hour for Entire Intersection Begins at 08:00 AM																					
08:00 AM	0	0	0	2	2	16	**345**	14	0	**375**	23	3	6	**4**	36	12	365	7	0	384	797
08:15 AM	0	0	0	**3**	**3**	8	315	24	0	347	22	1	6	2	31	6	409	11	0	426	807
08:30 AM	0	0	0	3	3	**18**	330	27	0	375	14	**6**	10	4	34	11	**428**	23	0	**462**	**874**
08:45 AM	0	0	0	3	3	13	306	**39**	**1**	359	**43**	6	**12**	4	**65**	**15**	387	**37**	0	439	866
Total Volume	0	0	0	11	11	55	1296	104	1	1456	102	16	34	14	166	44	1589	78	0	1711	3344
% App. Total	0	0	0	100		3.8	89	7.1	0.1		61.4	9.6	20.5	8.4		2.6	92.9	4.6	0		
PHF	.000	.000	.000	.917	.917	.764	.939	.667	.250	.971	.593	.667	.708	.875	.638	.733	.928	.527	.000	.926	.957

Crossroads Engineering

8320 SW 90th Street
Miami, FL 33186
786-236-2857

CLIENT:TRAFTECH
JOB NO.:2015-024
PROJECT:HALLANDALE BEACH
COUNTY:MIAMI-DADE

File Name : NE 10TH AVE @ HALLANDALE BCH BLVD
Site Code : 00000000
Start Date : 4/15/2015
Page No : 4

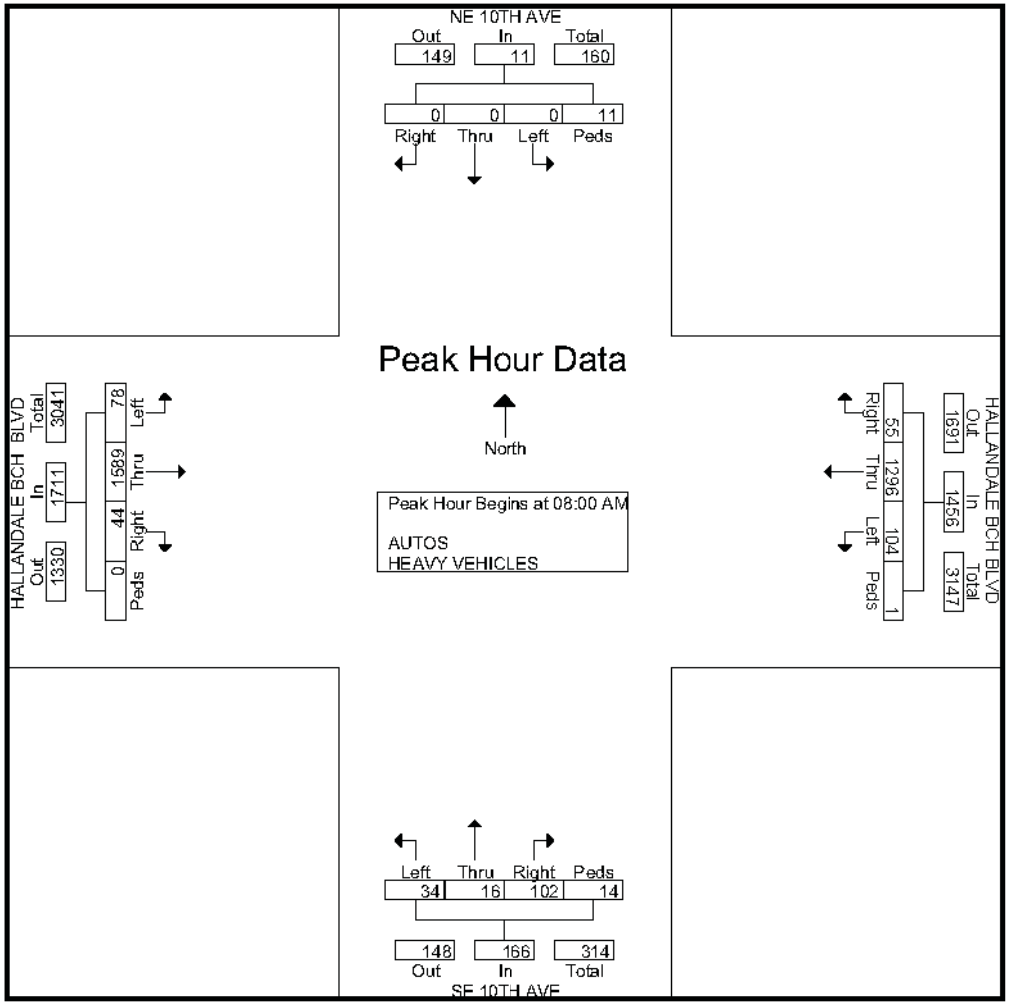

Crossroads Engineering

8320 SW 90th Street
Miami, FL 33186
786-236-2857

CLIENT:TRAFTECH
JOB NO.:2015-024
PROJECT:HALLANDALE BEACH
COUNTY:MIAMI-DADE

File Name : NE 10TH AVE @ HALLANDALE BCH BLVD
Site Code : 00000000
Start Date : 4/15/2015
Page No : 5

	NE 10TH AVE From North					HALLANDALE BCH BLVD From East					SE 10TH AVE From South					HALLANDALE BCH BLVD From West					
Start Time	Right	Thru	Left	Peds	App. Total	Right	Thru	Left	Peds	App. Total	Right	Thru	Left	Peds	App. Total	Right	Thru	Left	Peds	App. Total	Int. Total
Peak Hour Analysis From 04:00 PM to 05:45 PM - Peak 1 of 1																					
Peak Hour for Entire Intersection Begins at 04:45 PM																					
04:45 PM	0	0	0	5	5	**34**	353	39	4	430	65	35	**22**	6	128	**18**	387	29	**1**	435	998
05:00 PM	0	0	0	5	5	18	418	**86**	5	**527**	74	**72**	19	10	**175**	10	367	32	1	410	**1117**
05:15 PM	0	0	0	**11**	**11**	28	**440**	56	3	527	**83**	47	17	7	154	9	306	26	1	342	1034
05:30 PM	0	0	0	11	11	16	409	37	**9**	471	59	32	13	**11**	115	13	**397**	**37**	1	**448**	1045
Total Volume	0	0	0	32	32	96	1620	218	21	1955	281	186	71	34	572	50	1457	124	4	1635	4194
% App. Total	0	0	0	100		4.9	82.9	11.2	1.1		49.1	32.5	12.4	5.9		3.1	89.1	7.6	0.2		
PHF	.000	.000	.000	.727	.727	.706	.920	.634	.583	.927	.846	.646	.807	.773	.817	.694	.918	.838	1.00	.912	.939

Crossroads Engineering

8320 SW 90th Street
Miami, FL 33186
786-236-2857

CLIENT:TRAFTECH
JOB NO.:2015-024
PROJECT:HALLANDALE BEACH
COUNTY:MIAMI-DADE

File Name : NE 10TH AVE @ HALLANDALE BCH BLVD
Site Code : 00000000
Start Date : 4/15/2015
Page No : 6

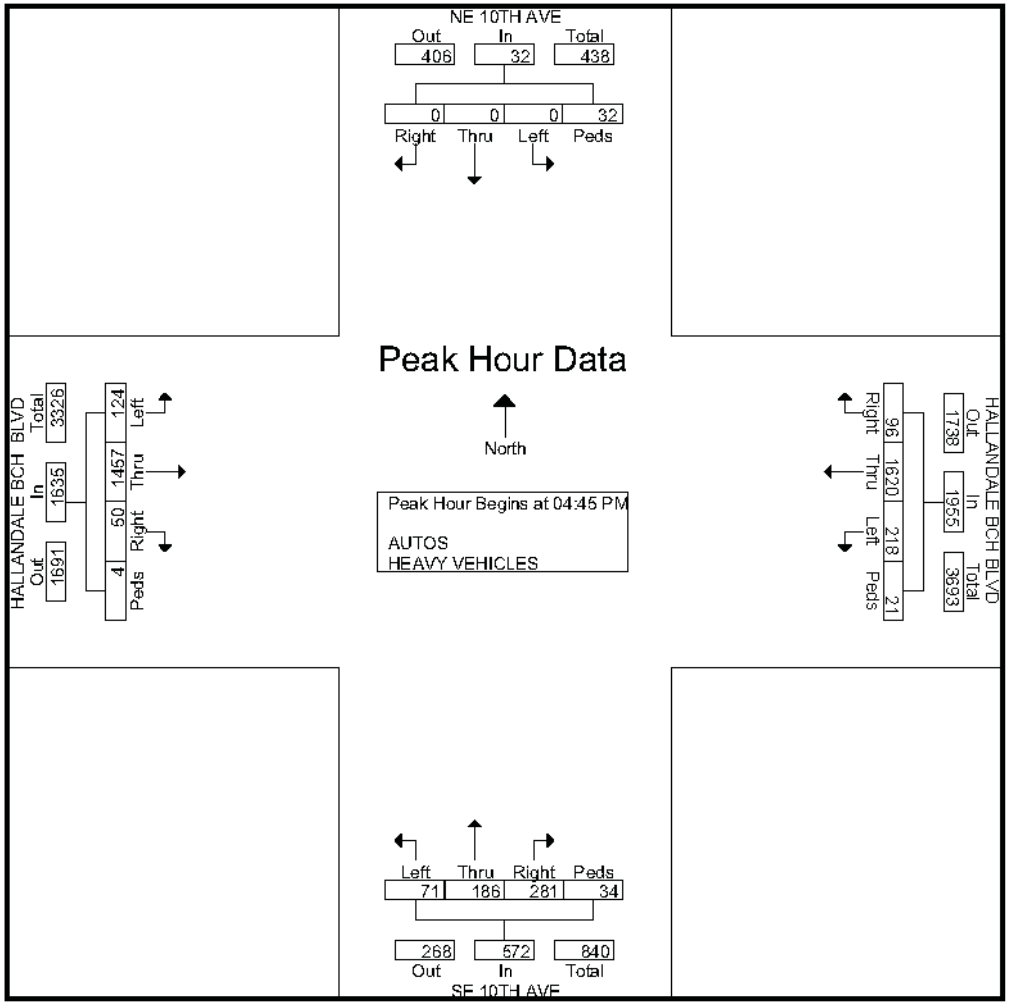

Crossroads Engineering

8320 SW 90th Street
Miami, FL 33186
786-236-2857

CLIENT:TRAFTECH
JOB NO.:2015-024
PROJECT:HALLANDALE BEACH
COUNTY:MIAMI-DADE

File Name : NE 10TH AVE @ HALLANDALE BCH BLVD
Site Code : 00000000
Start Date : 4/15/2015
Page No : 1

Groups Printed- HEAVY VEHICLES

	NE 10TH AVE From North				HALLANDALE BCH BLVD From East				SE 10TH AVE From South				HALLANDALE BCH BLVD From West				
Start Time	Right	Thru	Left	Peds	Right	Thru	Left	Peds	Right	Thru	Left	Peds	Right	Thru	Left	Peds	Int. Total
07:00 AM	0	0	0	0	0	4	0	0	1	0	1	0	0	5	1	0	12
07:15 AM	0	0	0	0	0	3	0	0	0	0	1	0	1	6	0	0	11
07:30 AM	0	0	0	0	0	3	0	0	0	0	2	0	0	10	0	0	15
07:45 AM	0	0	0	0	0	7	0	0	0	0	0	0	1	7	0	0	15
Total	0	0	0	0	0	17	0	0	1	0	4	0	2	28	1	0	53
08:00 AM	0	0	0	0	1	1	0	0	2	0	1	0	1	5	1	0	12
08:15 AM	0	0	0	0	0	7	1	0	0	0	1	0	1	9	0	0	19
08:30 AM	0	0	0	0	0	4	0	0	0	0	0	0	0	4	0	0	8
08:45 AM	0	0	0	0	0	3	0	0	0	0	1	0	1	11	1	0	17
Total	0	0	0	0	1	15	1	0	2	0	3	0	3	29	2	0	56
*** BREAK ***																	
04:00 PM	0	0	0	0	0	7	0	0	1	0	2	0	2	5	0	0	17
04:15 PM	0	0	0	0	2	5	0	0	0	0	1	0	0	0	0	0	8
04:30 PM	0	0	0	0	0	5	0	0	0	0	1	0	1	6	0	0	13
04:45 PM	0	0	0	0	0	2	0	0	0	0	0	0	1	5	0	0	8
Total	0	0	0	0	2	19	0	0	1	0	4	0	4	16	0	0	46
05:00 PM	0	0	0	0	1	5	0	0	0	0	0	0	1	3	0	0	10
05:15 PM	0	0	0	0	0	7	0	0	0	0	0	0	0	1	0	0	8
05:30 PM	0	0	0	0	0	2	0	0	0	0	0	0	1	3	0	0	6
05:45 PM	0	0	0	0	1	6	0	0	0	0	1	0	0	2	0	0	10
Total	0	0	0	0	2	20	0	0	0	0	1	0	2	9	0	0	34
Grand Total	0	0	0	0	5	71	1	0	4	0	12	0	11	82	3	0	189
Apprch %	0	0	0	0	6.5	92.2	1.3	0	25	0	75	0	11.5	85.4	3.1	0	
Total %	0	0	0	0	2.6	37.6	0.5	0	2.1	0	6.3	0	5.8	43.4	1.6	0	

HALLANDALE BEACH BOULEVARD & NE/SE 14TH AVENUE, HALLANDALE BEACH, FLORIDA
COUNTED BY: W. ASSAM & R. ESPADA
SIGNALIZED

Traffic Survey Specialists, Inc.
624 Gardenia Terrace
Delray Beach, Florida 33444
Phone (561) 272-3255

Site Code : 00150012
Start Date: 01/20/15
File I.D. : HBB14AVE
Page : 1

ALL VEHICLES

	NE 14TH AVENUE From North				HALLANDALE BEACH BLVD From East				SE 14TH AVENUE From South				HALLANDALE BEACH BLVD From West				
	UTurn	Left	Thru	Right	UTurn	Left	Thru	Right	UTurn	Left	Thru	Right	UTurn	Left	Thru	Right	Total
Date 01/20/15																	
07:00	0	6	6	29	0	1	247	2	0	29	6	3	8	0	172	25	534
07:15	0	6	8	23	0	0	262	3	0	44	9	7	1	2	197	22	584
07:30	0	6	11	24	0	4	269	10	0	56	11	2	4	4	231	37	669
07:45	0	17	9	32	0	4	230	5	0	50	7	5	6	5	210	37	617
Hr Total	0	35	34	108	0	9	1008	20	0	179	33	17	19	11	810	121	2404
08:00	0	21	15	30	2	9	329	9	0	58	12	5	4	8	316	46	864
08:15	0	16	23	28	0	12	303	5	0	44	10	7	3	11	252	44	758
08:30	0	20	20	30	2	10	267	7	0	54	16	8	14	6	265	60	779
08:45	0	22	12	41	1	6	309	9	0	69	7	3	23	13	333	55	903
Hr Total	0	79	70	129	5	37	1208	30	0	225	45	23	44	38	1166	205	3304
* BREAK *																	
16:00	0	32	24	42	1	10	416	11	0	74	29	26	15	23	359	88	1150
16:15	0	17	19	43	2	14	360	13	0	70	31	25	14	37	373	79	1097
16:30	0	16	25	29	0	15	374	10	0	89	33	17	12	30	303	90	1043
16:45	0	28	14	27	1	16	386	15	0	63	27	13	24	32	359	60	1065
Hr Total	0	93	82	141	4	55	1536	49	0	296	120	81	65	122	1394	317	4355
17:00	0	19	17	35	1	15	307	16	0	67	47	34	25	30	345	93	1051
17:15	0	22	19	33	0	17	326	16	0	68	38	23	36	17	338	79	1032
17:30	0	12	17	46	1	16	342	18	0	56	22	17	23	30	387	68	1055
17:45	0	19	16	31	0	16	280	12	0	68	36	21	19	38	367	76	999
Hr Total	0	72	69	145	2	64	1255	62	0	259	143	95	103	115	1437	316	4137
TOTAL	0	279	255	523	11	165	5007	161	0	959	341	216	231	286	4807	959	14200

Traffic Survey Specialists, Inc.
624 Gardenia Terrace
Delray Beach, Florida 33444
Phone (561) 272-3255

HALLANDALE BEACH BOULEVARD & NE/SE 14TH AVENUE, HALLANDALE BEACH, FLORIDA
COUNTED BY: W. ASSAM & R. ESPADA
SIGNALIZED

Site Code : 00150012
Start Date: 01/20/15
File I.D. : HBB14AVE
Page : 2

ALL VEHICLES

	NE 14TH AVENUE From North				HALLANDALE BEACH BLVD From East				SE 14TH AVENUE From South				HALLANDALE BEACH BLVD From West				
	UTurn	Left	Thru	Right	UTurn	Left	Thru	Right	UTurn	Left	Thru	Right	UTurn	Left	Thru	Right	Total
Date 01/20/15																	
Peak Hour Analysis By Entire Intersection for the Period: 07:00 to 09:00 on 01/20/15																	
Peak start	08:00				08:00				08:00				08:00				
Volume	0	79	70	129	5	37	1208	30	0	225	45	23	44	38	1166	205	
Percent	0%	28%	25%	46%	0%	3%	94%	2%	0%	77%	15%	8%	3%	3%	80%	14%	
Pk total	278				1280				293				1453				
Highest	08:45				08:00				08:45				08:45				
Volume	0	22	12	41	2	9	329	9	0	69	7	3	23	13	333	55	
Hi total	75				349				79				424				
PHF	.93				.92				.93				.86				

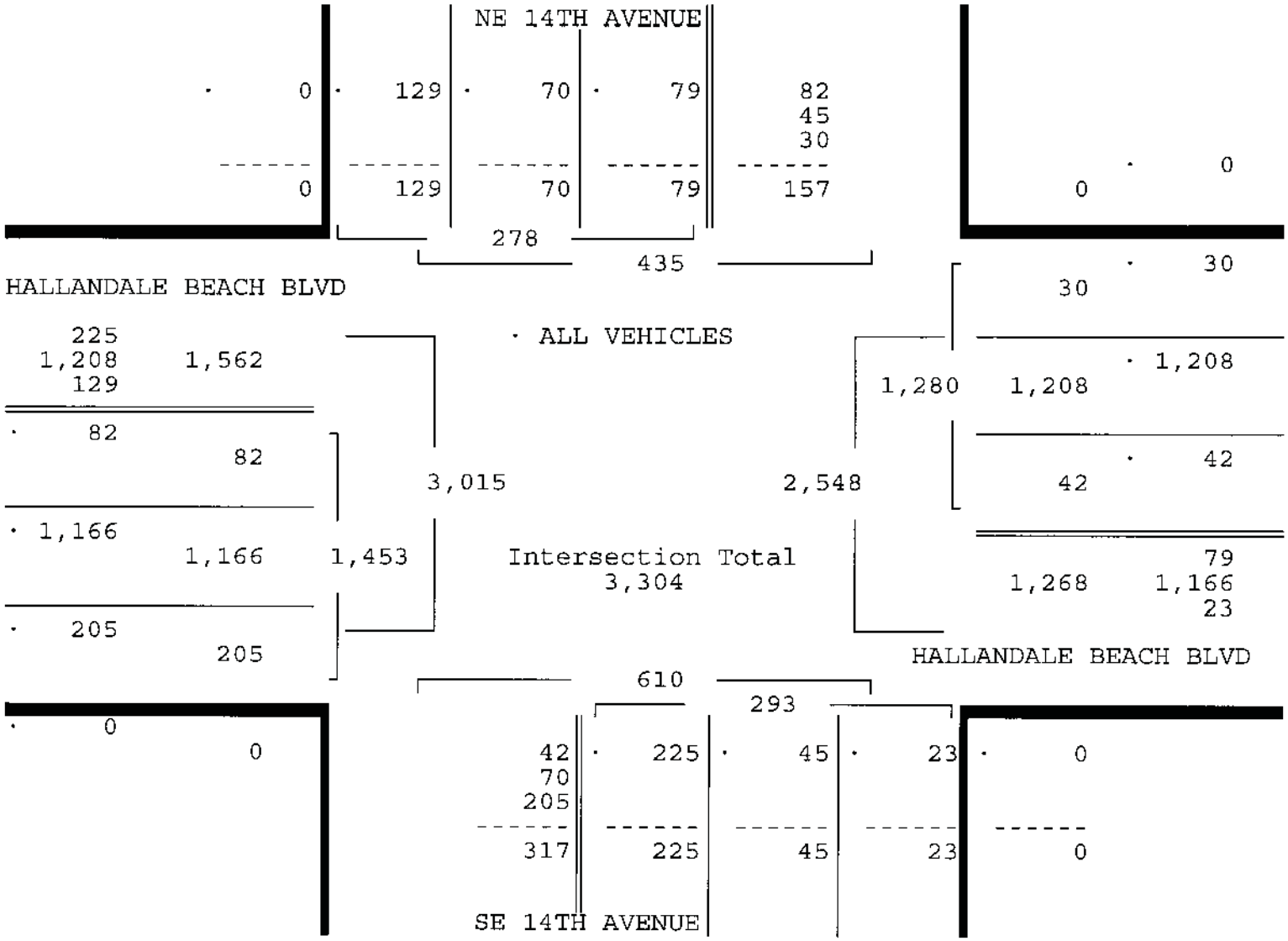

Traffic Survey Specialists, Inc.
624 Gardenia Terrace
Delray Beach, Florida 33444
Phone (561) 272 3255

HALLANDALE BEACH BOULEVARD & NE/SE 14TH AVENUE, HALLANDALE BEACH, FLORIDA
COUNTED BY: W. ASSAM & R. ESPADA
SIGNALIZED

Site Code : 00150012
Start Date: 01/20/15
File I.D. : HBB14AVE
Page : 3

ALL VEHICLES

	NE 14TH AVENUE From North				HALLANDALE BEACH BLVD From East				SE 14TH AVENUE From South				HALLANDALE BEACH BLVD From West				
	UTurn	Left	Thru	Right	UTurn	Left	Thru	Right	UTurn	Left	Thru	Right	UTurn	Left	Thru	Right	Total
Date 01/20/15																	
Peak Hour Analysis By Entire Intersection for the Period: 16:00 to 18:00 on 01/20/15																	
Peak start 16:00					16:00				16:00				16:00				
Volume	0	93	82	141	4	55	1536	49	0	296	120	81	65	122	1394	317	
Percent	0%	29%	26%	45%	0%	3%	93%	3%	0%	60%	24%	16%	3%	6%	73%	17%	
Pk total	316				1644				497				1898				
Highest	16:00				16:00				16:30				16:15				
Volume	0	32	24	42	1	10	416	11	0	89	33	17	14	37	373	79	
Hi total	98				438				139				503				
PHF	.81				.94				.89				.94				

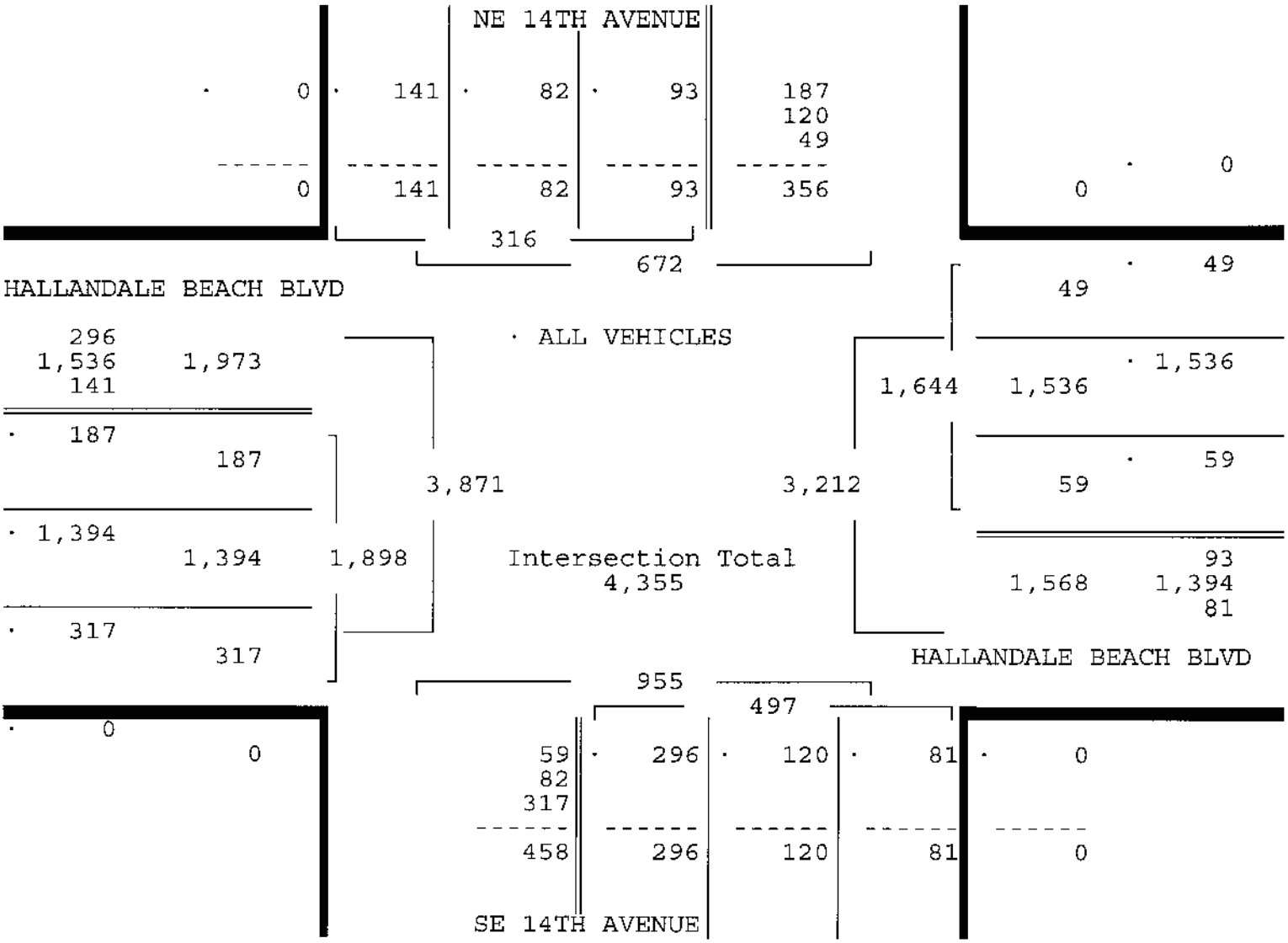

Traffic Survey Specialists, Inc.
624 Gardenia Terrace
Delray Beach, Florida 33444
Phone (561) 272-3255

HALLANDALE BEACH BOULEVARD & NE/SE 14TH AVENUE, HALLANDALE BEACH, FLORIDA
COUNTED BY: W. ASSAM & R. ESPADA
SIGNALIZED

Site Code : 00150012
Start Date: 01/20/15
File I.D. : HBB14AVE
Page : 1

PEDESTRIANS & BIKES

	NE 14TH AVENUE From North				HALLANDALE BEACH BLVD From East				SE 14TH AVENUE From South				HALLANDALE BEACH BLVD From West				
	Left	BIKES	Right	Peds	Left	BIKES	Right	Peds	Left	BIKES	Right	Peds	Left	BIKES	Right	Peds	Total
Date 01/20/15																	
07:00	0	1	0	7	0	1	0	1	0	1	0	3	0	0	0	0	14
07:15	0	1	0	3	0	0	0	1	0	2	0	3	0	0	0	0	10
07:30	0	1	0	3	0	0	0	2	0	2	0	0	0	0	0	2	10
07:45	0	2	0	3	0	1	0	2	0	5	0	4	0	1	0	1	19
Hr Total	0	5	0	16	0	2	0	6	0	10	0	10	0	1	0	3	53
08:00	0	5	0	3	0	2	0	1	0	3	0	4	0	2	0	1	21
08:15	0	3	0	6	0	1	0	3	0	2	0	9	0	2	0	0	26
08:30	0	5	0	5	0	2	0	2	0	4	0	2	0	1	0	3	24
08:45	0	1	0	2	0	0	0	1	0	3	0	5	0	0	0	2	14
Hr Total	0	14	0	16	0	5	0	7	0	12	0	20	0	5	0	6	85
---------- * BREAK * ----------																	
16:00	0	4	0	4	0	2	0	4	0	3	0	5	0	2	0	3	27
16:15	0	2	0	5	0	0	0	4	0	6	0	4	0	0	0	7	28
16:30	0	1	0	12	0	2	0	4	0	2	0	7	0	0	0	1	29
16:45	0	6	0	12	0	1	0	6	0	7	0	11	0	1	0	5	49
Hr Total	0	13	0	33	0	5	0	18	0	18	0	27	0	3	0	16	133
17:00	0	2	0	7	0	2	0	2	0	4	0	10	0	0	0	10	37
17:15	0	2	0	4	0	0	0	6	0	4	0	4	0	1	0	0	21
17:30	0	2	0	6	0	2	0	6	0	10	0	9	0	0	0	1	36
17:45	0	4	0	5	0	5	0	6	0	2	0	11	0	2	0	2	37
Hr Total	0	10	0	22	0	9	0	20	0	20	0	34	0	3	0	13	131
TOTAL	0	42	0	87	0	21	0	51	0	60	0	91	0	12	0	38	402

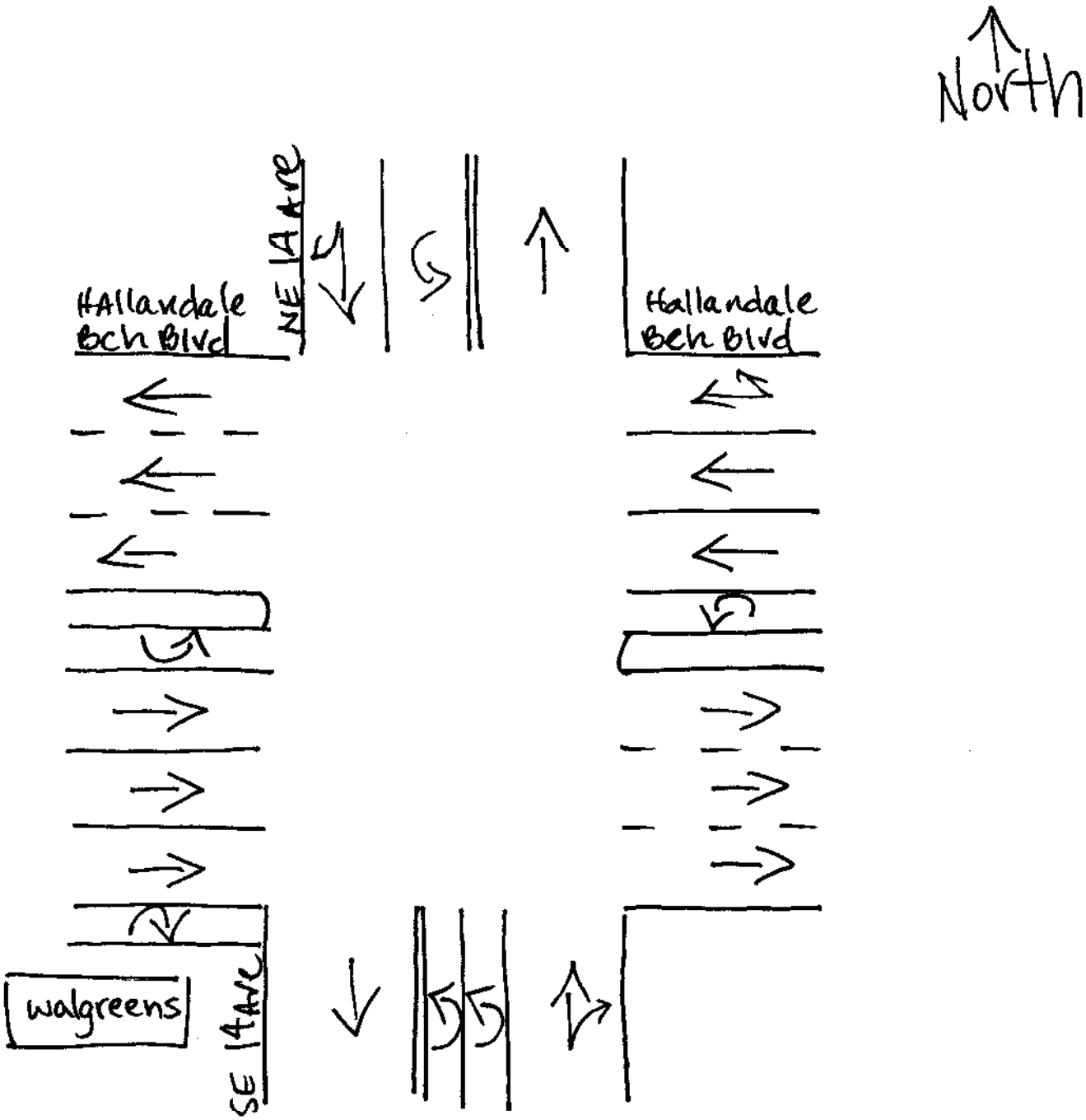

Hallandale Beach, Florida
January 20, 2015
drawn by: Luis Palomino
signalized

APPENDIX E

Internalization Analyses

PROPOSED LAND USES

Trip Generation

and Internal Capture Summary

Analyst: Peterson

Date: 7-Dec-15

AM Peak Hour

LAND USE A: Office

ITE LU Code: Code 710

SIZE: 59,631 square feet

	Total	Internal	External
Enter	112	3	109
Exit	15	0	15
Total	127	3	124
%	100%	2%	98%

Exit to External: 15

Enter from External: 109

28%	4	4%	4
Demand		Demand	
0		0	
Balanced		Balanced	
32%	0	29%	0
Demand		Demand	

1%	0	3%	3
Demand		Demand	
0		3	
Balanced		Balanced	
0%	0	2%	3
Demand		Demand	

LAND USE B: Retail

ITE LU Code: Code 826

SIZE: 26,489 sq.ft.

	Total	Internal	External
Enter	0	0	0
Exit	0	0	0
Total	0	0	0
%	#DIV/0!	#DIV/0!	#DIV/0!

Exit to External: 0

ter from External: 0

Demand		Balanced	Demand	
14%	0	0	2%	2
17%	0	0	1%	2
Demand		Balanced	Demand	

LAND USE C: Apartment/Hotel

ITE LU Code: Codes 220 & 310

SIZE: 700 units

	Total	Internal	External
Enter	101	0	101
Exit	155	3	152
Total	256	3	253
%	100%	1%	99%

Enter from External: 101

Exit to External: 152

Net External Trips for Multi-Use Development

	LAND USE A	LAND USE B	LAND USE C	TOTAL	
Enter	109	0	101	210	
Exit	15	0	152	167	
Total	124	0	253	377	INTERNAL CAPTURE
Single-Use Trip Gen. Est.	127	0	256	383	2%

PROPOSED LAND USES

Trip Generation

and Internal Capture Summary

Analyst: Peterson

Date: 7-Dec-15

PM Peak Hour

LAND USE A: Office

ITE LU Code: Code 710

SIZE: 59,631 square feet

	Total	Internal	External
Enter	25	6	19
Exit	120	7	113
Total	145	13	132
%	100%	9%	91%

Exit to External: 113

Enter from External: 19

LAND USE B: Retail & Restaurant

ITE LU Code: Code 826 / 931

SIZE: 33,829 sq.ft.

	Total	Internal	External
Enter	58	10	48
Exit	45	13	32
Total	103	23	80
%	100%	22%	78%

Exit to External: 32

ter from External: 48

LAND USE C: Apartment/Hotel

ITE LU Code: Codes 220 & 310

SIZE: 700 units

	Total	Internal	External
Enter	166	14	152
Exit	126	11	115
Total	292	25	267
%	100%	9%	91%

Enter from External: 152

Exit to External: 115

	Demand	Balanced	Demand
A → B	20% 24	5	8% 5
B → A	31% 8	1	2% 1
A → C	2% 2	2	4% 7
C → A	57% 14	5	4% 5
B → C	26% 12	12	46% 76
C → B	10% 6	6	42% 53

Net External Trips for Multi-Use Development

	LAND USE A	LAND USE B	LAND USE C	TOTAL
Enter	19	48	152	219
Exit	113	32	115	261
Total	132	80	267	479
Single-Use Trip Gen. Est.	145	103	292	540

INTERNAL CAPTURE: 11%

APPENDIX F

FDOT Peak Season Conversion Factor Report

2014 Peak Season Factor Category Report - Report Type: ALL
Category: 8600 EAST-A1A TO US1

MOCF: 0.90

Week	Dates	SF	PSCF
1	01/01/2014 - 01/04/2014	0.98	1.09
2	01/05/2014 - 01/11/2014	0.98	1.09
3	01/12/2014 - 01/18/2014	0.97	1.08
4	01/19/2014 - 01/25/2014	0.95	1.06
* 5	01/26/2014 - 02/01/2014	0.94	1.04
* 6	02/02/2014 - 02/08/2014	0.92	1.02
* 7	02/09/2014 - 02/15/2014	0.90	1.00
* 8	02/16/2014 - 02/22/2014	0.89	0.99
* 9	02/23/2014 - 03/01/2014	0.88	0.98
*10	03/02/2014 - 03/08/2014	0.88	0.98
*11	03/09/2014 - 03/15/2014	0.87	0.97
*12	03/16/2014 - 03/22/2014	0.87	0.97
*13	03/23/2014 - 03/29/2014	0.89	0.99
*14	03/30/2014 - 04/05/2014	0.90	1.00
*15	04/06/2014 - 04/12/2014	0.92	1.02
*16	04/13/2014 - 04/19/2014	0.93	1.03
*17	04/20/2014 - 04/26/2014	0.95	1.06
18	04/27/2014 - 05/03/2014	0.96	1.07
19	05/04/2014 - 05/10/2014	0.97	1.08
20	05/11/2014 - 05/17/2014	0.99	1.10
21	05/18/2014 - 05/24/2014	1.00	1.11
22	05/25/2014 - 05/31/2014	1.02	1.13
23	06/01/2014 - 06/07/2014	1.04	1.16
24	06/08/2014 - 06/14/2014	1.06	1.18
25	06/15/2014 - 06/21/2014	1.08	1.20
26	06/22/2014 - 06/28/2014	1.08	1.20
27	06/29/2014 - 07/05/2014	1.07	1.19
28	07/06/2014 - 07/12/2014	1.07	1.19
29	07/13/2014 - 07/19/2014	1.06	1.18
30	07/20/2014 - 07/26/2014	1.06	1.18
31	07/27/2014 - 08/02/2014	1.06	1.18
32	08/03/2014 - 08/09/2014	1.06	1.18
33	08/10/2014 - 08/16/2014	1.05	1.17
34	08/17/2014 - 08/23/2014	1.05	1.17
35	08/24/2014 - 08/30/2014	1.08	1.20
36	08/31/2014 - 09/06/2014	1.10	1.22
37	09/07/2014 - 09/13/2014	1.13	1.26
38	09/14/2014 - 09/20/2014	1.15	1.28
39	09/21/2014 - 09/27/2014	1.13	1.26
40	09/28/2014 - 10/04/2014	1.11	1.23
41	10/05/2014 - 10/11/2014	1.09	1.21
42	10/12/2014 - 10/18/2014	1.07	1.19
43	10/19/2014 - 10/25/2014	1.07	1.19
44	10/26/2014 - 11/01/2014	1.07	1.19
45	11/02/2014 - 11/08/2014	1.07	1.19
46	11/09/2014 - 11/15/2014	1.06	1.18
47	11/16/2014 - 11/22/2014	1.06	1.18
48	11/23/2014 - 11/29/2014	1.04	1.16
49	11/30/2014 - 12/06/2014	1.02	1.13
50	12/07/2014 - 12/13/2014	1.00	1.11
51	12/14/2014 - 12/20/2014	0.98	1.09
52	12/21/2014 - 12/27/2014	0.98	1.09
53	12/28/2014 - 12/31/2014	0.97	1.08

* Peak Season

2014 Peak Season Factor Category Report - Report Type: ALL
Category: 8601 CEN.-W OF US1 TO SR7

MOCF: 0.97

Week	Dates	SF	PSCF
1	01/01/2014 - 01/04/2014	0.97	1.00
2	01/05/2014 - 01/11/2014	0.99	1.02
3	01/12/2014 - 01/18/2014	1.01	1.04
4	01/19/2014 - 01/25/2014	1.00	1.03
* 5	01/26/2014 - 02/01/2014	0.99	1.02
* 6	02/02/2014 - 02/08/2014	0.98	1.01
* 7	02/09/2014 - 02/15/2014	0.97	1.00
* 8	02/16/2014 - 02/22/2014	0.96	0.99
* 9	02/23/2014 - 03/01/2014	0.96	0.99
*10	03/02/2014 - 03/08/2014	0.96	0.99
*11	03/09/2014 - 03/15/2014	0.96	0.99
*12	03/16/2014 - 03/22/2014	0.96	0.99
*13	03/23/2014 - 03/29/2014	0.96	0.99
*14	03/30/2014 - 04/05/2014	0.97	1.00
*15	04/06/2014 - 04/12/2014	0.98	1.01
*16	04/13/2014 - 04/19/2014	0.98	1.01
*17	04/20/2014 - 04/26/2014	0.99	1.02
18	04/27/2014 - 05/03/2014	1.00	1.03
19	05/04/2014 - 05/10/2014	1.01	1.04
20	05/11/2014 - 05/17/2014	1.01	1.04
21	05/18/2014 - 05/24/2014	1.02	1.05
22	05/25/2014 - 05/31/2014	1.03	1.06
23	06/01/2014 - 06/07/2014	1.03	1.06
24	06/08/2014 - 06/14/2014	1.04	1.07
25	06/15/2014 - 06/21/2014	1.05	1.08
26	06/22/2014 - 06/28/2014	1.05	1.08
27	06/29/2014 - 07/05/2014	1.05	1.08
28	07/06/2014 - 07/12/2014	1.05	1.08
29	07/13/2014 - 07/19/2014	1.05	1.08
30	07/20/2014 - 07/26/2014	1.05	1.08
31	07/27/2014 - 08/02/2014	1.04	1.07
32	08/03/2014 - 08/09/2014	1.04	1.07
33	08/10/2014 - 08/16/2014	1.03	1.06
34	08/17/2014 - 08/23/2014	1.03	1.06
35	08/24/2014 - 08/30/2014	1.03	1.06
36	08/31/2014 - 09/06/2014	1.03	1.06
37	09/07/2014 - 09/13/2014	1.03	1.06
38	09/14/2014 - 09/20/2014	1.04	1.07
39	09/21/2014 - 09/27/2014	1.03	1.06
40	09/28/2014 - 10/04/2014	1.02	1.05
41	10/05/2014 - 10/11/2014	1.01	1.04
42	10/12/2014 - 10/18/2014	1.00	1.03
43	10/19/2014 - 10/25/2014	1.00	1.03
44	10/26/2014 - 11/01/2014	1.00	1.03
45	11/02/2014 - 11/08/2014	1.00	1.03
46	11/09/2014 - 11/15/2014	1.00	1.03
47	11/16/2014 - 11/22/2014	1.00	1.03
48	11/23/2014 - 11/29/2014	0.99	1.02
49	11/30/2014 - 12/06/2014	0.98	1.01
50	12/07/2014 - 12/13/2014	0.98	1.01
51	12/14/2014 - 12/20/2014	0.97	1.00
52	12/21/2014 - 12/27/2014	0.99	1.02
53	12/28/2014 - 12/31/2014	1.01	1.04

* Peak Season

APPENDIX G

FDOT Historic Traffic Counts

FLORIDA DEPARTMENT OF TRANSPORTATION
TRANSPORTATION STATISTICS OFFICE
2013 HISTORICAL AADT REPORT

COUNTY: 86 - BROWARD

SITE: 5029 - SR 858 / HALLANDALE BCH BLVD - E OF SR 5/US 1

YEAR	AADT	DIRECTION 1	DIRECTION 2	*K FACTOR	D FACTOR	T FACTOR
2013	39500 C	E 22000	W 17500	9.00	54.60	3.50
2012	45000 C	E 23000	W 22000	9.00	55.00	2.70
2011	42000 C	E 21000	W 21000	9.00	54.50	2.70
2010	42500 C	E 21000	W 21500	9.37	54.06	2.70
2009	46500 C	E 23000	W 23500	9.31	53.74	2.20
2008	55000 C	E 27000	W 28000	9.70	54.48	2.20
2007	39500 C	E 19500	W 20000	9.10	53.47	2.50
2006	45500 C	E 24000	W 21500	9.48	53.59	3.80
2005	47000 C	E 24500	W 22500	10.60	58.90	4.70
2004	49500 C	E 25500	W 24000	10.40	56.30	5.00
2003	48500 C	E 24500	W 24000	9.20	55.90	5.90
2002	48000 C	E 23500	W 24500	9.50	55.00	3.50
2001	44500 C	E 22000	W 22500	9.70	55.60	5.90
2000	46000 C	E 23000	W 23000	9.40	56.30	3.90
1999	45000 C	E 23000	W 22000	9.40	56.40	4.10
1998	46500 C	E 23500	W 23000	9.60	53.90	6.40

AADT FLAGS: C = COMPUTED; E = MANUAL ESTIMATE; F = FIRST YEAR ESTIMATE
S = SECOND YEAR ESTIMATE; T = THIRD YEAR ESTIMATE; F = FOURTH YEAR ESTIMATE
V = FIFTH YEAR ESTIMATE; 6 = SIXTH YEAR ESTIMATE; X = UNKNOWN
*K FACTOR: STARTING WITH YEAR 2011 IS STANDARDK, PRIOR YEARS ARE K30 VALUES

APPENDIX H

Committed Projects

Village at Gulfstream / Gulfstream Park

Table 21-1A
VILLAGE AT GULFSTREAM PARK
PHASE 1 (2010) SUMMARY OF SIGNIFICANCE DETERMINATION

Roadway		Adopted	Number	Commited Number	Directional Peak Hr	Project			Percent of LOS		Significant Impact ???	
From	To	LOS	Of Lanes	Of Lanes	Capacity	Percent Assignment	Traffic NB/EB	Traffic SB/WB	NB/EB	SB/WB	NB/EB	SB/WB
SR 826 (NE 163rd Street/NE 167th Street)												
Golden Glades Intchg	NE 6th Avenue	E+50	6LD	6LD	5730	0%	0	0	0.00%	0.00%	No	No
NE 6th Avenue	NE 10th Avenue	E+50	6LD	6LD	5730	0%	0	0	0.00%	0.00%	No	No
NE 10th Avenue	NE 19th Avenue	E+20	6LD	6LD	3250	1%	10	9	0.31%	0.28%	No	No
NE 19th Avenue	U.S. 1	E+20	6LD	6LD	3250	3%	31	28	0.95%	0.86%	No	No
U.S. 1	NE 35th Avenue	E+20	8LD	6LD	4200	0%	0	0	0.00%	0.00%	No	No
NE 35th Avenue	Collins Ave (SR A1A)	E+20	8LD	6LD	4200	0%	0	0	0.00%	0.00%	No	No
Miami Gardens Drive (NE 186th Street)												
SR 7	NE 6th Avenue	HE	4LD	4LD	1800	4%	41	38	2.28%	2.11%	No	No
NE 6th Ave	NE 10th Avenue	E	4LD	4LD	1800	5%	52	47	2.89%	2.61%	No	No
NE 10th Avenue	U.S. 1	E	4LD	4LD	1800	6%	62	57	3.44%	3.17%	No	No
William Lehman Causeway (NE 192 Street)												
US 1	SR A1A	E+20	6LX	6LX	7380	1%	9	10	0.12%	0.14%	No	No
203 rd St (Ives Dairy Road)												
US 441 / SR 7	I-95	D	6LD	6LD	3245	5%	52	47	1.60%	1.45%	No	No
I-95	US 1/Federal Highway	E+50	6LD	6LD	4065	14%	145	132	3.57%	3.25%	No	No
SR 858 (Hallandale Beach Blvd)												
US 441 / SR 7	SW 56th AVE		4LD	4LD	1710	7%	72	66	4.21%	3.86%	No	No
SW 56th AVE	I-95	D	4LD	4LD	1710	10%	103	95	6.02%	5.56%	**Yes**	**Yes**
I-95	Dixie Hwy	D	6LD	6LD	2570	24%	248	227	9.65%	8.83%	**Yes**	**Yes**
Dixie Hwy	US 1/Federal Highway	D	6LD	6LD	2570	30%	310	284	12.06%	11.05%	**Yes**	**Yes**
US 1/Federal Highway	Ocean Dr	D	6LD	6LD	2570	13%	123	134	4.79%	5.21%	No	**Yes**
Pembroke Road												
US 441 / SR 7	SW 56th Ave	D	6LD	6LD	2570	4%	41	38	1.60%	1.48%	No	No
SW 56th Ave	Park Rd	D	6LD	6LD	2570	4%	41	38	1.60%	1.48%	No	No
Park Rd	I-95	D	6LD	6LD	2570	5%	52	47	2.02%	1.83%	No	No
I-95	Dixie Hwy	D	4LU	4LU	1710	9%	93	85	5.44%	4.97%	**Yes**	No
Dixie Hwy	US 1/Federal Highway	D	4LU	4LU	1710	8%	83	76	4.85%	4.44%	No	No
Washington St												
US 441 / SR 7	SW 56th Ave	D	COL 4	COL 4	1140	0%	0	0	0.00%	0.00%	No	No
SW 56th Ave	Park Rd	D	COL 2	COL 2	530	1%	10	9	1.89%	1.70%	No	No
Hollywood Blvd												
US 441 / SR 7	SW 56th Ave	D	6LD	6LD	2570	1%	10	9	0.39%	0.35%	No	No
SW 56th Ave	N 46th Ave	D	6LD	6LD	2570	1%	10	9	0.39%	0.35%	No	No
N 46th Ave	Park Rd	D	6LD	6LD	2570	2%	21	19	0.82%	0.74%	No	No
Park Rd	I-95	D	6LD	6LD	2570	2%	21	19	0.82%	0.74%	No	No
I-95	Dixie Hwy	D	4LU	4LU	1710	0%	0	0	0.00%	0.00%	No	No
Dixie Hwy	US 1/Federal Highway	D	4LD	4LD	1860	0%	0	0	0.00%	0.00%	No	No
US 1/Federal Highway	Ocean Dr	D	4LU	4LU	1860	1%	9	10	0.48%	0.54%	No	No
Johnson St												
US 441 / SR 7	SW 56th Ave	D	COL 2	COL 2	530	0%	0	0	0.00%	0.00%	No	No
SW 56th Ave	N 46th Ave	D	COL 2	COL 2	530	0%	0	0	0.00%	0.00%	No	No
N 46th Ave	Park Rd	D	COL 2	COL 2	530	0%	0	0	0.00%	0.00%	No	No
Park Rd	Dixie Hwy	D	COL 2	COL 2	530	1%	10	9	1.89%	1.70%	No	No
Dixie Hwy	US 1/Federal Highway	D	COL 2	COL 2	530	0%	0	0	0.00%	0.00%	No	No
Taft St												
US 441 / SR 7	SW 56th Ave	D	COL 2	COL 2	530	0%	0	0	0.00%	0.00%	No	No
SW 56th Ave	N 46th Ave	D	COL 2	COL 2	530	0%	0	0	0.00%	0.00%	No	No
N 46th Ave	Park Rd	D	COL 2	COL 2	530	0%	0	0	0.00%	0.00%	No	No
Park Rd	Dixie Hwy	D	COL 2	COL 2	530	0%	0	0	0.00%	0.00%	No	No
Dixie Hwy	US 1/Federal Highway	D	COL 2	COL 2	530	0%	0	0	0.00%	0.00%	No	No
Sheridan St												
US 441 / SR 7	SW 56th Ave	D	6LD	6LD	2570	1%	10	9	0.39%	0.35%	No	No
SW 56th Ave	N 46th Ave	D	6LD	6LD	2570	1%	10	9	0.39%	0.35%	No	No
N 46th Ave	Park Rd	D	6LD	6LD	2570	1%	10	9	0.39%	0.35%	No	No
Park Rd	I-95	D	6LD	6LD	2570	2%	21	19	0.82%	0.74%	No	No
I-95	Dixie Hwy	D	6LD	6LD	2570	0%	0	0	0.00%	0.00%	No	No
Dixie Hwy	US 1/Federal Highway	D	4LD	4LD	1710	0%	0	0	0.00%	0.00%	No	No
US 1/Federal Highway	Ocean Dr	D	4LU	4LU	1710	0%	0	0	0.00%	0.00%	No	No
Stirling Road												
US 441 / SR 7	SW 56th Ave	D	6LD	6LD	2750	0%	0	0	0.00%	0.00%	No	No
SW 56th Ave	N 46th Ave	D	6LD	6LD	2750	0%	0	0	0.00%	0.00%	No	No
N 46th Ave	Park Rd	D	6LD	6LD	2750	0%	0	0	0.00%	0.00%	No	No
Park Rd	I-95	D	6LD	6LD	2330	1%	10	9	0.43%	0.39%	No	No
I-95	US 1/Federal Highway	D	6LD	6LD	2330	1%	10	9	0.43%	0.39%	No	No
Park Road												
Pembroke Road	Washington St	D	COL 4	COL 4	1140	1%	9	10	0.79%	0.88%	No	No
Washington St	Hollywood Blvd	D	COL 4	COL 4	1140	0%	0	0	0.00%	0.00%	No	No
Hollywood Blvd	Johnson St	D	COL 4	COL 4	1140	0%	0	0	0.00%	0.00%	No	No
Johnson St	Taft St	D	COL 4	COL 4	1140	0%	0	0	0.00%	0.00%	No	No
Taft St	Sheridan St	D	COL 2	COL 2	530	0%	0	0	0.00%	0.00%	No	No
Sheridan St	Stirling Road	D	COL 2	COL 2	530	0%	0	0	0.00%	0.00%	No	No
N 46th Ave												
Hollywood Blvd	Johnson St	D	COL 4	COL 4	1140	0%	0	0	0.00%	0.00%	No	No
Johnson St	Taft St	D	COL 4	COL 4	1140	0%	0	0	0.00%	0.00%	No	No
Taft St	Sheridan St	D	COL 4	COL 4	1140	0%	0	0	0.00%	0.00%	No	No
Sheridan St	Stirling Road	D	COL 4	COL 4	1140	0%	0	0	0.00%	0.00%	No	No

Table 21-1A (CONTINUED)
VILLAGE AT GULFSTREAM PARK
PHASE 1 (2010) SUMMARY OF SIGNIFICANCE DETERMINATION

Roadway				Commited	Directional	Project			Percent of		Significant Impact	
		Adopted	Number	Number	Peak Hr	Percent	Traffic		LOS		???	
From	To	LOS	Of Lanes	Of Lanes	Capacity	Assignment	NB/EB	SB/WB	NB/EB	SB/WB	NB/EB	SB/WB
SW 56th Ave												
County Line	Hallandale Beach Blvd	D	COL 2	COL 2	530	0%	0	0	0.00%	0.00%	No	No
Hallandale Beach Blvd	Pembroke Rd	D	COL 2	COL 2	530	0%	0	0	0.00%	0.00%	No	No
Pembroke Rd	Washington St	D	COL 2	COL 2	530	0%	0	0	0.00%	0.00%	No	No
Washington St	Hollywood Blvd (SR 822)	D	COL 2	COL 2	530	0%	0	0	0.00%	0.00%	No	No
Hollywood Blvd (SR 822)	Johnson St	D	COL 2	COL 2	530	0%	0	0	0.00%	0.00%	No	No
Johnson St	Taft St	D	COL 2	COL 2	530	0%	0	0	0.00%	0.00%	No	No
Taft St	Sheridan Street	D	COL 2	COL 2	530	0%	0	0	0.00%	0.00%	No	No
Sheridan Street	Stirling Road	D	COL 2	COL 2	530	0%	0	0	0.00%	0.00%	No	No
US 441/ SR 7												
Golden Glades Intchg	Miami Gardens Drive	E	6LD	6LD	3330	2%	21	19	0.63%	0.57%	No	No
Miami Gardens Drive	203rd St (Ives Dairy Rd)	E	6LD	6LD	3330	1%	10	9	0.30%	0.27%	No	No
203rd St (Ives Dairy Rd)	County Line	E	6LD	6LD	3330	0%	0	0	0.00%	0.00%	No	No
County Line	Hallandale Beach Blvd	D	4LD	4LD	1860	2%	21	19	1.13%	1.02%	No	No
Hallandale Beach Blvd	Pembroke Rd	D	4LD	4LD	1860	3%	28	31	1.51%	1.67%	No	No
Pembroke Rd	Washington St	D	4LD	4LD	1860	2%	19	21	1.02%	1.13%	No	No
Washington St	Hollywood Blvd (SR 822)	D	4LD	4LD	1860	2%	19	21	1.02%	1.13%	No	No
Hollywood Blvd (SR 822)	Johnson St	D	4LD	4LD	1710	1%	9	10	0.53%	0.58%	No	No
Johnson St	Taft St	D	4LD	4LD	1710	1%	9	10	0.53%	0.58%	No	No
Taft St	Sheridan Street	D	4LD	4LD	1710	1%	9	10	0.53%	0.58%	No	No
Sheridan Street	Stirling Road	D	4LD	4LD	1860	1%	9	10	0.48%	0.54%	No	No
Dixie Hwy/West Dixie Highway												
SR 826	Miami Gardens Drive	D	5LD	5LD	1510	3%	31	28	2.05%	1.85%	No	No
Miami Gardens Drive	203rd St (Ives Dairy Rd)	D	5LD	5LD	1510	3%	31	28	2.05%	1.85%	No	No
203rd St (Ives Dairy Rd)	County Line	D	5LD	5LD	1510	4%	41	38	2.72%	2.52%	No	No
County Line	Hallandale Beach Blvd	D	5LD	5LD	1510	3%	31	28	2.05%	1.85%	No	No
Hallandale Beach Blvd	Pembroke Rd	D	5LD	5LD	1510	3%	28	31	1.85%	2.05%	No	No
Pembroke Rd	Hollywood Blvd (SR 822)	D	5LD	5LD	1510	1%	9	10	0.60%	0.66%	No	No
Hollywood Blvd (SR 822)	Johnson St	D	6LD	6LD	1510	0%	0	0	0.00%	0.00%	No	No
Johnson St	Taft St	D	6LD	6LD	1510	0%	0	0	0.00%	0.00%	No	No
Taft St	Sheridan Street	D	6LD	6LD	1510	0%	0	0	0.00%	0.00%	No	No
Sheridan Street	Stirling Road	D	COL 2	COL 2	530	0%	0	0	0.00%	0.00%	No	No
US 1/Federal Highway												
SR 826	Miami Gardens Drive	E+50	8LD	8LD	4995	11%	114	104	2.28%	2.08%	No	No
Miami Gardens Dr	192nd St (Lehman Cswy)	E+50	8LD	8LD	4995	15%	155	142	3.10%	2.84%	No	No
192nd St (Lehman Cswy)	203rd St (Ives Dairy Road)	E+50	8LD	8LD	4995	17%	176	161	3.52%	3.22%	No	No
203rd St (Ives Dairy Road)	County Line	D	6LD	6LD	3870	39%	403	369	10.41%	9.53%	**Yes**	**Yes**
County Line	Project Dwy	D	6LD	6LD	2570	39%	403	369	15.68%	14.36%	**Yes**	**Yes**
Project Dwy	Hallandale Beach Blvd	D	6LD	6LD	2570	40%	378	413	14.71%	16.07%	**Yes**	**Yes**
Hallandale Beach Blvd	Pembroke Rd	D	4LD	4LD	1510	15%	142	155	9.40%	10.26%	**Yes**	**Yes**
Pembroke Rd	Hollywood Blvd (SR 822)	D	4LD	4LD	1510	7%	66	72	4.37%	4.77%	No	No
Hollywood Blvd (SR 822)	Johnson St	D	4LD	4LD	1710	5%	47	52	2.75%	3.04%	No	No
Johnson St	Taft St	D	4LD	4LD	1710	5%	47	52	2.75%	3.04%	No	No
Taft St	Sheridan Street	D	4LD	4LD	1710	5%	47	52	2.75%	3.04%	No	No
Sheridan Street	Stirling Road	D	4LD	4LD	1710	4%	38	41	2.22%	2.40%	No	No
Ocean Dr												
SR 826	Miami Gardens Drive	E+20	4LD	4LD	1810	2%	21	19	1.16%	1.05%	No	No
Miami Gardens Dr	192nd St (Lehman Cswy)	E+20	4LD	4LD	1810	3%	31	28	1.71%	1.55%	No	No
192nd St (Lehman Cswy)	County Line	E+20	4LD	4LD	1810	4%	41	38	2.27%	2.10%	No	No
County Line	Hallandale Beach Blvd	D	6LD	6LD	2570	5%	52	47	2.02%	1.83%	No	No
Hallandale Beach Blvd	Hollywood Blvd	D	6LD	6LD	2330	2%	19	21	0.82%	0.90%	No	No
Hollywood Blvd	Sheridan Street	D	6LD	6LD	2330	1%	9	10	0.39%	0.43%	No	No
Sheridan Street	Stirling Road	D	6LD	6LD	2330	0%	0	0	0.00%	0.00%	No	No
I-95												
SR 826	Miami Gardens Drive	D	8LX	8LX	9090	10%	103	95	1.13%	1.05%	No	No
Miami Gardens Dr	203rd St (Ives Dairy Rd)	D	8LX	8LX	9090	10%	103	95	1.13%	1.05%	No	No
203rd St (Ives Dairy Rd)	County Line	D	10LX	10LX	12470	1%	10	9	0.08%	0.07%	No	No
County Line	Hallandale Beach Blvd	D	10LX	10LX	9340	1%	10	9	0.11%	0.10%	No	No
Hallandale Beach Blvd	Pembroke Rd	D	10LX	10LX	9340	13%	123	134	1.32%	1.43%	No	No
Pembroke Rd	Hollywood Blvd	D	10LX	10LX	9340	17%	161	176	1.72%	1.88%	No	No
Hollywood Blvd	Sheridan Street	D	10LX	10LX	9340	14%	132	145	1.41%	1.55%	No	No
Sheridan Street	Stirling Road	D	10LX	10LX	9340	12%	113	124	1.21%	1.33%	No	No

Table 21-1B
VILLAGE AT GULFSTREAM PARK
PHASE 2 (2014) SUMMARY OF SIGNIFICANCE DETERMINATION

Roadway		Adopted	Number	Committed Number	Directional Peak Hr	Project Percent	Project Traffic		Percent of LOS		Significant Impact ???	
From	To	LOS	Of Lanes	Of Lanes	Capacity	Assignment	NB/EB	SB/WB	NB/EB	SB/WB	NB/EB	SB/WB
SR 826 (NE 163rd Street/NE 167th Street)												
Golden Glades Intchg	NE 6th Avenue	E+50	6LD	6LD	5730	0%	0	0	0.00%	0.00%	No	No
NE 6th Avenue	NE 10th Avenue	E+50	6LD	6LD	5730	0%	0	0	0.00%	0.00%	No	No
NE 10th Avenue	NE 19th Avenue	E+20	6LD	6LD	3250	1%	13	14	0.40%	0.43%	No	No
NE 19th Avenue	U.S. 1	E+20	6LD	6LD	3250	3%	38	42	1.17%	1.29%	No	No
U.S. 1	NE 35th Avenue	E+20	8LD	6LD	4200	0%	0	0	0.00%	0.00%	No	No
NE 35th Avenue	Collins Ave (SR A1A)	E+20	8LD	6LD	4200	0%	0	0	0.00%	0.00%	No	No
Miami Gardens Drive (NE 186th Street)												
SR 7	NE 6th Avenue	HE	4LD	4LD	1800	4%	50	55	2.78%	3.06%	No	No
NE 6th Ave	NE 10th Avenue	E	4LD	4LD	1800	5%	63	69	3.50%	3.83%	No	No
NE 10th Avenue	U.S. 1	E	4LD	4LD	1800	6%	75	83	4.17%	4.61%	No	No
William Lehman Causeway (NE 192 Street)												
US 1	SR A1A	E+20	6LX	6LX	7380	1%	14	13	0.19%	0.18%	No	No
203 rd St (Ives Dairy Road)												
US 441/SR 7	I-95	D	6LD	6LD	3245	5%	63	69	1.94%	2.13%	No	No
I-95	US 1/Federal Highway	E+50	6LD	6LD	4065	14%	175	194	4.31%	4.77%	No	No
SR 858 (Hallandale Beach Blvd)												
US 441/SR 7	SW 56th Ave	D	4LD	4LD	1710	7%	88	97	5.15%	5.67%	**Yes**	**Yes**
SW 56th Ave	I-95	D	4LD	4LD	1710	10%	125	139	7.31%	8.13%	**Yes**	**Yes**
I-95	Dixie Hwy	D	6LD	6LD	2570	24%	300	333	11.67%	12.96%	**Yes**	**Yes**
Dixie Hwy	US 1/Federal Highway	D	6LD	6LD	2570	30%	375	416	14.59%	16.19%	**Yes**	**Yes**
US 1/Federal Highway	Ocean Dr	D	6LD	6LD	2570	13%	180	163	7.00%	6.34%	**Yes**	**Yes**
Pembroke Road												
US 441/SR 7	SW 56th Ave	D	6LD	6LD	2570	4%	50	55	1.95%	2.14%	No	No
SW 56th Ave	Park Rd	D	6LD	6LD	2570	4%	50	55	1.95%	2.14%	No	No
Park Rd	I-95	D	6LD	6LD	2570	5%	63	69	2.45%	2.68%	No	No
I-95	Dixie Hwy	D	4LU	4LU	1710	9%	113	125	6.61%	7.31%	**Yes**	**Yes**
Dixie Hwy	US 1/Federal Highway	D	4LU	4LU	1710	8%	100	111	5.85%	6.49%	**Yes**	**Yes**
Washington St												
US 441/SR 7	SW 56th Ave	D	COL 4	COL 4	1140	0%	0	0	0.00%	0.00%	No	No
SW 56th Ave	Park Rd	D	COL 2	COL 2	530	1%	13	14	2.45%	2.64%	No	No
Hollywood Blvd												
US 441/SR 7	SW 56th AVE	D	6LD	6LD	2570	1%	13	14	0.51%	0.54%	No	No
SW 56th AVE	N 46th Ave	D	6LD	6LD	2570	1%	13	14	0.51%	0.54%	No	No
N 46th Ave	Park Rd	D	6LD	6LD	2570	2%	25	28	0.97%	1.09%	No	No
Park Rd	I-95	D	6LD	6LD	2570	2%	25	28	0.97%	1.09%	No	No
I-95	Dixie Hwy	D	4LU	4LU	1710	0%	0	0	0.00%	0.00%	No	No
Dixie Hwy	US 1/Federal Highway	D	4LD	4LD	1860	0%	0	0	0.00%	0.00%	No	No
US 1/Federal Highway	Ocean Dr	D	4LU	4LU	1860	1%	14	13	0.75%	0.70%	No	No
Johnson St												
US 441/SR 7	SW 56th AVE	D	COL 2	COL 2	530	0%	0	0	0.00%	0.00%	No	No
SW 56th AVE	N 46th Ave	D	COL 2	COL 2	530	0%	0	0	0.00%	0.00%	No	No
N 46th Ave	Park Rd	D	COL 2	COL 2	530	0%	0	0	0.00%	0.00%	No	No
Park Rd	Dixie Hwy	D	COL 2	COL 2	530	1%	13	14	2.45%	2.64%	No	No
Dixie Hwy	US 1/Federal Highway	D	COL 2	COL 2	530	0%	0	0	0.00%	0.00%	No	No
Taft St												
US 441/SR 7	SW 56th AVE	D	COL 2	COL 2	530	0%	0	0	0.00%	0.00%	No	No
SW 56th AVE	N 46th Ave	D	COL 2	COL 2	530	0%	0	0	0.00%	0.00%	No	No
N 46th Ave	Park Rd	D	COL 2	COL 2	530	0%	0	0	0.00%	0.00%	No	No
Park Rd	Dixie Hwy	D	COL 2	COL 2	530	0%	0	0	0.00%	0.00%	No	No
Dixie Hwy	US 1/Federal Highway	D	COL 2	COL 2	530	0%	0	0	0.00%	0.00%	No	No
Sheridan St												
US 441/SR 7	SW 56th AVE	D	6LD	6LD	2570	1%	13	14	0.51%	0.54%	No	No
SW 56th AVE	N 46th Ave	D	6LD	6LD	2570	1%	13	14	0.51%	0.54%	No	No
N 46th Ave	Park Rd	D	6LD	6LD	2570	1%	13	14	0.51%	0.54%	No	No
Park Rd	I-95	D	6LD	6LD	2570	2%	25	28	0.97%	1.09%	No	No
I-95	Dixie Hwy	D	6LD	6LD	2570	0%	0	0	0.00%	0.00%	No	No
Dixie Hwy	US 1/Federal Highway	D	4LD	4LD	1710	0%	0	0	0.00%	0.00%	No	No
US 1/Federal Highway	Ocean Dr	D	4LU	4LU	1710	0%	0	0	0.00%	0.00%	No	No
Stirling Road												
US 441/SR 7	SW 56th AVE	D	6LD	6LD	2750	0%	0	0	0.00%	0.00%	No	No
SW 56th AVE	N 46th Ave	D	6LD	6LD	2750	0%	0	0	0.00%	0.00%	No	No
N 46th Ave	Park Rd	D	6LD	6LD	2750	0%	0	0	0.00%	0.00%	No	No
Park Rd	I-95	D	6LD	6LD	2330	1%	13	14	0.56%	0.60%	No	No
I-95	US 1/Federal Highway	D	6LD	6LD	2330	1%	13	14	0.56%	0.60%	No	No
Park Road												
Pembroke Road	Washington St	D	COL 4	COL 4	1140	1%	14	13	1.23%	1.14%	No	No
Washington St	Hollywood Blvd	D	COL 4	COL 4	1140	0%	0	0	0.00%	0.00%	No	No
Hollywood Blvd	Johnson St	D	COL 4	COL 4	1140	0%	0	0	0.00%	0.00%	No	No
Johnson St	Taft St	D	COL 4	COL 4	1140	0%	0	0	0.00%	0.00%	No	No
Taft St	Sheridan St	D	COL 2	COL 2	530	0%	0	0	0.00%	0.00%	No	No
Sheridan St	Stirling Road	D	COL 2	COL 2	530	0%	0	0	0.00%	0.00%	No	No
N 46th Ave												
Hollywood Blvd	Johnson St	D	COL 4	COL 4	1140	0%	0	0	0.00%	0.00%	No	No
Johnson St	Taft St	D	COL 4	COL 4	1140	0%	0	0	0.00%	0.00%	No	No
Taft St	Sheridan St	D	COL 4	COL 4	1140	0%	0	0	0.00%	0.00%	No	No
Sheridan St	Stirling Road	D	COL 4	COL 4	1140	0%	0	0	0.00%	0.00%	No	No

Table 21-1B (CONTINUED)
VILLAGE AT GULFSTREAM PARK
PHASE 2 (2014) SUMMARY OF SIGNIFICANCE DETERMINATION

Roadway		Adopted	Number	Commited Number	Directional Peak Hr	Project Percent	Traffic		Percent of LOS		Significant Impact ???	
From	To	LOS	Of Lanes	Of Lanes	Capacity	Assignment	NB/EB	SB/WB	NB/EB	SB/WB	NB/EB	SB/WB
SW 56th Ave												
County Line	Hallandale Beach Blvd	D	COL 2	COL 2	530	0%	0	0	0.00%	0.00%	No	No
Hallandale Beach Blvd	Pembroke Rd	D	COL 2	COL 2	530	0%	0	0	0.00%	0.00%	No	No
Pembroke Rd	Washington St	D	COL 2	COL 2	530	0%	0	0	0.00%	0.00%	No	No
Washington St	Hollywood Blvd (SR 822)	D	COL 2	COL 2	530	0%	0	0	0.00%	0.00%	No	No
Hollywood Blvd (SR 822)	Johnson St	D	COL 2	COL 2	530	0%	0	0	0.00%	0.00%	No	No
Johnson St	Taft St	D	COL 2	COL 2	530	0%	0	0	0.00%	0.00%	No	No
Taft St	Sheridan St	D	COL 2	COL 2	530	0%	0	0	0.00%	0.00%	No	No
Sheridan St	Stirling Road	D	COL 2	COL 2	530	0%	0	0	0.00%	0.00%	No	No
US 441/ SR 7												
Golden Glades Intchg	Miami Gardens Drive	E	6LD	6LD	3330	2%	25	28	0.75%	0.84%	No	No
Miami Gardens Drive	203rd St (Ives Dairy Rd)	E	6LD	6LD	3330	1%	13	14	0.39%	0.42%	No	No
203rd St (Ives Dairy Rd)	County Line	E	6LD	6LD	3330	0%	0	0	0.00%	0.00%	No	No
County Line	Hallandale Beach Blvd	D	4LD	4LD	1860	2%	25	28	1.34%	1.51%	No	No
Hallandale Beach Blvd	Pembroke Rd	D	4LD	4LD	1860	3%	42	38	2.26%	2.04%	No	No
Pembroke Rd	Washington St	D	4LD	4LD	1860	2%	28	25	1.51%	1.34%	No	No
Washington St	Hollywood Blvd (SR 822)	D	4LD	4LD	1860	2%	28	25	1.51%	1.34%	No	No
Hollywood Blvd (SR 822)	Johnson St	D	4LD	4LD	1710	1%	14	13	0.82%	0.76%	No	No
Johnson St	Taft St	D	4LD	4LD	1710	1%	14	13	0.82%	0.76%	No	No
Taft St	Sheridan St	D	4LD	4LD	1710	1%	14	13	0.82%	0.76%	No	No
Sheridan St	Stirling Road	D	4LD	4LD	1860	1%	14	14	0.75%	0.75%	No	No
Dixie Hwy/West Dixie Highway												
SR 826	Miami Gardens Drive	D	5LD	5LD	1510	3%	38	42	2.52%	2.78%	No	No
Miami Gardens Drive	203rd St (Ives Dairy Road)	D	5LD	5LD	1510	3%	38	42	2.52%	2.78%	No	No
203rd St (Ives Dairy Road)	County Line	D	5LD	5LD	1510	4%	50	55	3.31%	3.64%	No	No
County Line	Hallandale Beach Blvd	D	5LD	5LD	1510	3%	38	42	2.52%	2.78%	No	No
Hallandale Beach Blvd	Pembroke Rd	D	5LD	5LD	1510	3%	42	38	2.78%	2.52%	No	No
Pembroke Rd	Hollywood Blvd (SR 822)	D	5LD	5LD	1510	1%	14	13	0.93%	0.86%	No	No
Hollywood Blvd (SR 822)	Johnson St	D	6LD	6LD	1510	0%	0	0	0.00%	0.00%	No	No
Johnson St	Taft St	D	6LD	6LD	1510	0%	0	0	0.00%	0.00%	No	No
Taft St	Sheridan Street	D	6LD	6LD	1510	0%	0	0	0.00%	0.00%	No	No
Sheridan Street	Stirling Road	D	COL 2	COL 2	530	0%	0	0	0.00%	0.00%	No	No
US 1/Federal Highway												
SR 826	Miami Gardens Drive	E+50	8LD	8LD	4995	11%	138	153	2.76%	3.06%	No	No
Miami Gardens Dr	192nd St (Lehman Cswy)	E+50	8LD	8LD	4995	15%	188	208	3.76%	4.16%	No	No
192nd St (Lehman Cswy)	203rd St (Ives Dairy Road)	E+50	8LD	8LD	4995	17%	213	236	4.26%	4.72%	No	No
203rd St (Ives Dairy Road)	County Line	D	6LD	6LD	3870	39%	488	541	12.61%	13.98%	Yes	Yes
County Line	Project Dwy	D	6LD	6LD	2570	39%	488	541	18.99%	21.05%	Yes	Yes
Project Dwy	Hallandale Beach Blvd	D	6LD	6LD	2570	40%	555	500	21.60%	19.46%	Yes	Yes
Hallandale Beach Blvd	Pembroke Rd	D	4LD	4LD	1510	15%	208	188	13.77%	12.45%	Yes	Yes
Pembroke Rd	Hollywood Blvd (SR 822)	D	4LD	4LD	1510	7%	97	88	6.42%	5.83%	Yes	Yes
Hollywood Blvd (SR 822)	Johnson St	D	4LD	4LD	1710	5%	69	63	4.04%	3.68%	No	No
Johnson St	Taft St	D	4LD	4LD	1710	5%	69	63	4.04%	3.68%	No	No
Taft St	Sheridan Street	D	4LD	4LD	1710	5%	69	63	4.04%	3.68%	No	No
Sheridan Street	Stirling Road	D	4LD	4LD	1710	4%	55	50	3.22%	2.92%	No	No
Ocean Dr												
SR 826	Miami Gardens Drive	E+20	4LD	4LD	1810	2%	25	28	1.38%	1.55%	No	No
Miami Gardens Dr	192nd St (Lehman Cswy)	E+20	4LD	4LD	1810	3%	38	42	2.10%	2.32%	No	No
192nd St (Lehman Cswy)	County Line	E+20	4LD	4LD	1810	4%	50	55	2.76%	3.04%	No	No
County Line	Hallandale Beach Blvd	D	6LD	6LD	2570	5%	63	69	2.45%	2.68%	No	No
Hallandale Beach Blvd	Hollywood Blvd (SR 822)	D	6LD	6LD	2330	2%	28	25	1.20%	1.07%	No	No
Hollywood Blvd (SR 822)	Sheridan St	D	6LD	6LD	2330	1%	14	13	0.60%	0.56%	No	No
Sheridan St	Stirling Road	D	6LD	6LD	2330	0%	0	0	0.00%	0.00%	No	No
I-95												
SR 826	Miami Gardens Drive	D	8LX	8LX	9090	10%	125	139	1.38%	1.53%	No	No
Miami Gardens Dr	203rd St (Ives Dairy Rd)	D	8LX	8LX	9090	10%	125	139	1.38%	1.53%	No	No
203rd St (Ives Dairy Rd)	County Line	D	10LX	10LX	12470	1%	13	14	0.10%	0.11%	No	No
County Line	Hallandale Beach Blvd	D	10LX	10LX	9340	1%	13	14	0.14%	0.15%	No	No
Hallandale Beach Blvd	Pembroke Rd	D	10LX	10LX	9340	13%	180	163	1.93%	1.75%	No	No
Pembroke Rd	Hollywood Blvd	D	10LX	10LX	9340	17%	236	213	2.53%	2.28%	No	No
Hollywood Blvd	Sheridan St	D	10LX	10LX	9340	14%	194	175	2.08%	1.87%	No	No
Sheridan St	Stilring Road	D	10LX	10LX	9340	12%	166	150	1.78%	1.61%	No	No

Table 21-11
VILLAGE AT GULFSTREAM PARK
2010 FUTURE CAPACITY ANALYSIS

Roadway		Adopted	Number	Existing Volume PM Peak		Commited Number	Directional Peak Hr	Project Traffic		Significant Impact ???		Area Wide Avg Growth	Committed Development Traffic		Background Traffic 2010		Total Traffic 2010		Under Capacity ???	
From	To	LOS	Of Lanes	NB/EB	SB/WB	Of Lanes	Capacity	NB/EB	SB/WB	NB/EB	SB/WB	Rate	NB/EB	SB/WB	NB/EB	SB/WB	NB/EB	SB/WB	NB/EB	SB/WB
SR 858 (Hallandale Beach Blvd)																				
US 441/ SR 7	SW 56th Ave	D	4LD	1269	1642	4LD	1710	103	95	**Yes**	**Yes**	1.90%	0	0	1462	1892	1565	1987	**Yes**	No
SW 56th Ave	I-95	D	4LD	1874	2426	4LD	1710	248	227	**Yes**	**Yes**	1.90%	0	0	2159	2795	2407	3022	No	No
I-95	Dixie Hwy	D	6LD	2454	2709	6LD	2570	248	227	**Yes**	**Yes**	1.90%	45	91	2827	3121	3075	3348	No	No
Dixie Hwy	US 1/Federal Highway	D	6LD	1270	2181	6LD	2570	310	284	**Yes**	**Yes**	1.90%	122	123	1489	2513	1799	2797	**Yes**	No
US 1/Federal Highway	Ocean Dr	D	6LD	1898	1958	6LD	2570	123	134	No	**Yes**	1.90%	144	120	2186	2256	2309	2390	**Yes**	**Yes**
Pembroke Road																				
I-95	Dixie Hwy	D	4LU	1869	1538	4LU	1710	93	85	**Yes**	No	1.90%	0	0	2153	1772	2246	1857	No	No
US 1/Federal Highway																				
203rd St (Ives Dairy Road)	County Line	D	6LD	1362	1496	6LD	3870	403	369	**Yes**	**Yes**	1.90%	328	356	1794	1966	2197	2335	**Yes**	**Yes**
County Line	Project Dwy	D	6LD	2104	1832	6LD	2570	403	369	**Yes**	**Yes**	1.90%	146	170	2424	2141	2827	2510	No	**Yes**
Project Dwy	Hallandale Beach Blvd	D	6LD	1543	1885	6LD	2570	378	413	**Yes**	**Yes**	1.90%	194	252	1854	2280	2232	2693	**Yes**	No
Hallandale Beach Blvd	Pembroke Rd	D	4LD	1543	1885	4LD	1510	142	155	**Yes**	**Yes**	1.90%	89	110	1778	2172	1920	2327	No	No

Table 21-12
VILLAGE AT GULFSTREAM PARK
2014 FUTURE CAPACITY ANALYSIS

Roadway		Adopted	Number	Existing Volume PM Peak		Committed Number	Directional Peak Hr	Project Percent	Project Traffic		Significant Impact ???		Area Wide Avg Growth	Committed Development Traffic		Total Traffic 2014		Under Capacity ???	
From	To	LOS	Of Lanes	NB/EB	SB/WB	Of Lanes	Capacity	Assignment	NB/EB	SB/WB	NB/EB	SB/WB	Rate	NB/EB	SB/WB	NB/EB	SB/WB	NB/EB	SB/WB
SR 858 (Hallandale Beach Blvd)																			
US 441/ SR 7	SW 56th AVE	D	4LD	1269	1642	4LD	1710	7.0%	88	97	**Yes**	**Yes**	1.90%	0	0	1646	2113	**Yes**	No
SW 56th AVE	I-95	D	4LD	1874	2426	4LD	1710	10.0%	125	139	**Yes**	**Yes**	1.90%	0	0	2426	3118	No	No
I-95	Dixie Hwy	D	6LD	2454	2709	6LD	2570	24.0%	300	333	**Yes**	**Yes**	1.90%	45	91	3314	3660	No	No
Dixie Hwy	US 1/Federal Highway	D	6LD	1270	2181	6LD	2570	30.0%	375	416	**Yes**	**Yes**	1.90%	122	123	1935	3094	**Yes**	No
US 1/Federal Highway	Ocean Dr	D	6LD	1898	1958	6LD	2570	13.0%	180	163	**Yes**	**Yes**	1.90%	144	120	2511	2567	**Yes**	**Yes**
Pembroke Road																			
I-95	Dixie Hwy	D	4LU	1869	1538	4LU	1710	9.0%	113	125	**Yes**	**Yes**	1.90%	0	0	2408	2014	No	No
Dixie Hwy	US 1/Federal Highway	D	4LU	840	1022	4LU	1710	8.0%	100	111	**Yes**	**Yes**	1.90%	0	0	1132	1366	**Yes**	**Yes**
US 1/Federal Highway																			
203rd St (Ives Dairy Road)	County Line	D	6LD	1362	1496	6LD	3870	39.0%	488	541	**Yes**	**Yes**	1.90%	328	356	2333	2564	**Yes**	**Yes**
County Line	Project Dwy	D	6LD	2104	1832	6LD	2570	39.0%	488	541	**Yes**	**Yes**	1.90%	146	170	3072	2791	No	No
Project Dwy	Hallandale Beach Blvd	D	6LD	1543	1885	6LD	2570	40.0%	555	500	**Yes**	**Yes**	1.90%	194	252	2468	2852	**Yes**	No
Hallandale Beach Blvd	Pembroke Rd	D	4LD	1543	1885	4LD	1510	15.0%	208	188	**Yes**	**Yes**	1.90%	89	110	2103	2503	No	No
Pembroke Rd	Hollywood Blvd (SR 822)	D	4LD	1494	1174	4LD	1510	7.0%	97	88	**Yes**	**Yes**	1.90%	0	0	1932	1530	No	No

7th Avenue Village

APPENDIX B: VOLUME DEVELOPMENT WORKSHEETS

VOLUME DEVELOPMENT SHEET
HALLANDALE BEACH RETAIL
HALLANDALE BEACH BLVD & W 8th AVE

Growth Rate =	0.50%	
Peak Season =	1.07	1.07
Buildout Year =	2018	2018
Years =	5	5

AM Peak Hour

	Northbound			Southbound			Eastbound			Westbound		
	LT	Thru	RT	LT	Thru	RT	LT	Thru	RT	LT	Thru	RT
Existing Volume on 07/23/2013	283	67	36	63	106	96	124	1,702	207	34	1,506	7
Peak Season Volume	303	72	39	67	113	103	133	1,821	221	36	1,611	7
Traffic Volume Growth	8	2	1	2	3	3	3	46	6	1	41	0
Committed Development												
0.5% Traffic Volume Growth	8	2	1	2	3	3	3	46	6	1	41	0
Diverted Traffic Volumes	3		5						22	3		
Background Traffic Volumes	314	74	45	69	116	106	136	1,867	249	40	1,652	7
Project Traffic												
Inbound Traffic Assignment			7.0%	5.0%				43.0%				
Inbound Traffic Volumes								2				
Outbound Traffic Assignment										7.0%	43.0%	5.0%
Outbound Traffic Volumes											-3	
Project Traffic								2			-3	
Total Traffic w/o RTOR	314	74	45	69	116	106	136	1,869	249	40	1,649	7
RTOR Reduction												
TOTAL TRAFFIC	**314**	**74**	**45**	**69**	**116**	**106**	**136**	**1,869**	**249**	**40**	**1,649**	**7**

PM Peak Hour

	Northbound			Southbound			Eastbound			Westbound		
	LT	Thru	RT	LT	Thru	RT	LT	Thru	RT	LT	Thru	RT
Existing Volume on 07/23/2013	356	97	22	58	87	115	166	1,657	242	62	1,658	39
Peak Season Volume	381	104	24	62	93	123	178	1,773	259	66	1,774	42
Traffic Volume Growth	10	3	1	2	2	3	4	45	7	2	45	1
Committed Development												
0.5% Traffic Volume Growth	19	3	1	2	2	3	4	45	7	2	45	1
Diverted Traffic Volumes	2		6						19	12		
Background Traffic Volumes	402	107	31	64	95	126	182	1,818	285	80	1,819	43
Project Traffic												
Inbound Traffic Assignment			7.0%	5.0%				43.0%				
Inbound Traffic Volumes			2	2				13				
Outbound Traffic Assignment										7.0%	43.0%	5.0%
Outbound Traffic Volumes										3	16	2
Project Traffic			2	2				13		3	16	2
Total Traffic w/o RTOR	402	107	33	66	95	126	182	1,831	285	83	1,835	45
RTOR Reduction												
TOTAL TRAFFIC	**402**	**107**	**33**	**66**	**95**	**126**	**182**	**1,831**	**285**	**83**	**1,835**	**45**

VOLUME DEVELOPMENT SHEET
HALLANDALE BEACH RETAIL
HALLANDALE BEACH BLVD & W 7th AVE

Growth Rate =	0.50%	
Peak Season =	1.07	1.07
Buildout Year =	2018	2018
Years =	5	5

AM Peak Hour

	Northbound			Southbound			Eastbound			Westbound		
	LT	Thru	RT	LT	Thru	RT	LT	Thru	RT	LT	Thru	RT
Existing Volume on 07/23/2013	6	0	8	0	1	14	36	1,726	39	7	1,486	7
Peak Season Volume	6	0	9	0	1	15	39	1,847	42	7	1,590	7
Traffic Volume Growth	0	0	0	0	0	0	1	47	1	0	40	0
Committed Development												
0.5% Traffic Volume Growth	0	0	0	0	0	0	1	47	1	0	40	0
Diverted Traffic Volumes	-6		-9						-43	-7		
Background Traffic Volumes	0	0	0	0	1	15	40	1,894	0	0	1,630	7
Project Traffic												
Inbound Traffic Assignment									55.0%	45.0%		
Inbound Traffic Volumes									23	19		
Outbound Traffic Assignment	55.0%		45.0%									
Outbound Traffic Volumes	14		11									
Project Traffic	14		11						23	19		
Total Traffic w/o RTOR	14	0	11	0	1	15	40	1,894	23	19	1,630	7
RTOR Reduction												
TOTAL TRAFFIC	**14**	**0**	**11**	**0**	**1**	**15**	**40**	**1,894**	**23**	**19**	**1,630**	**7**

PM Peak Hour

	Northbound			Southbound			Eastbound			Westbound		
	LT	Thru	RT	LT	Thru	RT	LT	Thru	RT	LT	Thru	RT
Existing Volume on 07/23/2013	3	2	9	1	1	19	52	1,536	35	21	1,704	21
Peak Season Volume	3	2	10	1	1	20	56	1,644	37	22	1,823	22
Traffic Volume Growth	0	0	0	0	0	1	1	42	1	1	46	1
Committed Development												
0.5% Traffic Volume Growth	0	0	0	0	0	1	1	42	1	1	46	1
Diverted Traffic Volumes	-3	-2	-10						-38	-23		
Background Traffic Volumes	0	0	0	1	1	21	57	1,686	0	0	1,869	23
Project Traffic												
Inbound Traffic Assignment									55.0%	45.0%		
Inbound Traffic Volumes									62	51		
Outbound Traffic Assignment	55.0%		45.0%									
Outbound Traffic Volumes	67		55									
Project Traffic	67		55						62	51		
Total Traffic w/o RTOR	67	0	55	1	1	21	57	1,686	62	51	1,869	23
RTOR Reduction												
TOTAL TRAFFIC	**67**	**0**	**55**	**1**	**1**	**21**	**57**	**1,686**	**62**	**51**	**1,869**	**23**

VOLUME DEVELOPMENT SHEET
HALLANDALE BEACH RETAIL
HALLANDALE BEACH BLVD & W 6th AVE

Growth Rate =	0.50%	
Peak Season =	1.07	1.07
Buildout Year =	2018	2018
Years =	5	5

AM Peak Hour

	Northbound			Southbound			Eastbound			Westbound		
	LT	Thru	RT	LT	Thru	RT	LT	Thru	RT	LT	Thru	RT
Existing Volume on 07/23/2013	61	23	8	12	26	33	37	1,626	90	7	1,434	15
Peak Season Volume	65	25	9	13	28	35	40	1,740	96	7	1,534	16
Traffic Volume Growth	2	1	0	0	1	1	1	44	2	0	39	0
Committed Development												
0.5% Traffic Volume Growth	2	1	0	0	1	1	1	44	2	0	39	0
Diverted Traffic Volumes	3		4						21	4		
Background Traffic Volumes	70	26	13	13	29	36	41	1,784	119	11	1,573	16
Project Traffic												
Inbound Traffic Assignment	5.0%					4.0%					36.0%	
Inbound Traffic Volumes											2	
Outbound Traffic Assignment							4.0%	36.0%	5.0%			
Outbound Traffic Volumes								-2				
Project Traffic								-2			2	
Total Traffic w/o RTOR	70	26	13	13	29	36	41	1,782	119	11	1,575	16
RTOR Reduction												
TOTAL TRAFFIC	**70**	**26**	**13**	**13**	**29**	**36**	**41**	**1,782**	**119**	**11**	**1,575**	**16**

PM Peak Hour

	Northbound			Southbound			Eastbound			Westbound		
	LT	Thru	RT	LT	Thru	RT	LT	Thru	RT	LT	Thru	RT
Existing Volume on 07/23/2013	23	5	1	2	10	11	15	432	26	1	399	3
Peak Season Volume	25	5	1	2	11	12	16	462	28	1	427	3
Traffic Volume Growth	1	0	0	0	0	0	0	12	1	0	11	0
Committed Development												
0.5% Traffic Volume Growth	1	0	0	0	0	0	0	12	1	0	11	0
Diverted Traffic Volumes	2		5						19	11		
Background Traffic Volumes	28	5	6	2	11	12	16	474	48	12	438	3
Project Traffic												
Inbound Traffic Assignment						15.0%					15.0%	
Inbound Traffic Volumes						5					5	
Outbound Traffic Assignment							15.0%	15.0%				
Outbound Traffic Volumes							6	6				
Project Traffic						5	6	6			5	
Total Traffic w/o RTOR	28	5	6	2	11	17	22	480	48	12	443	3
RTOR Reduction												
TOTAL TRAFFIC	**28**	**5**	**6**	**2**	**11**	**17**	**22**	**480**	**48**	**12**	**443**	**3**

Hallandale ArtSquare

Figure 7: AM Peak Trip Assignment

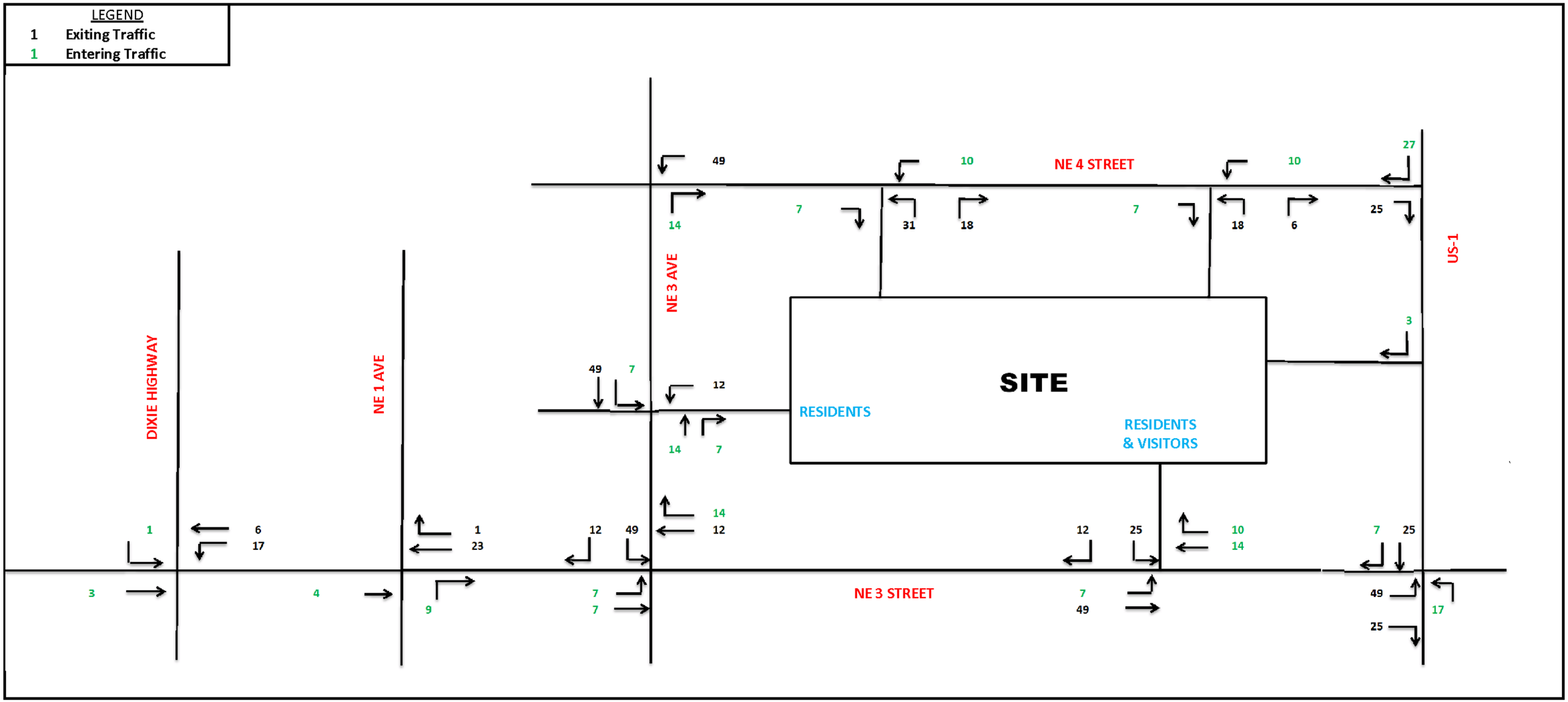

Figure 8: PM Peak Trip Assignment

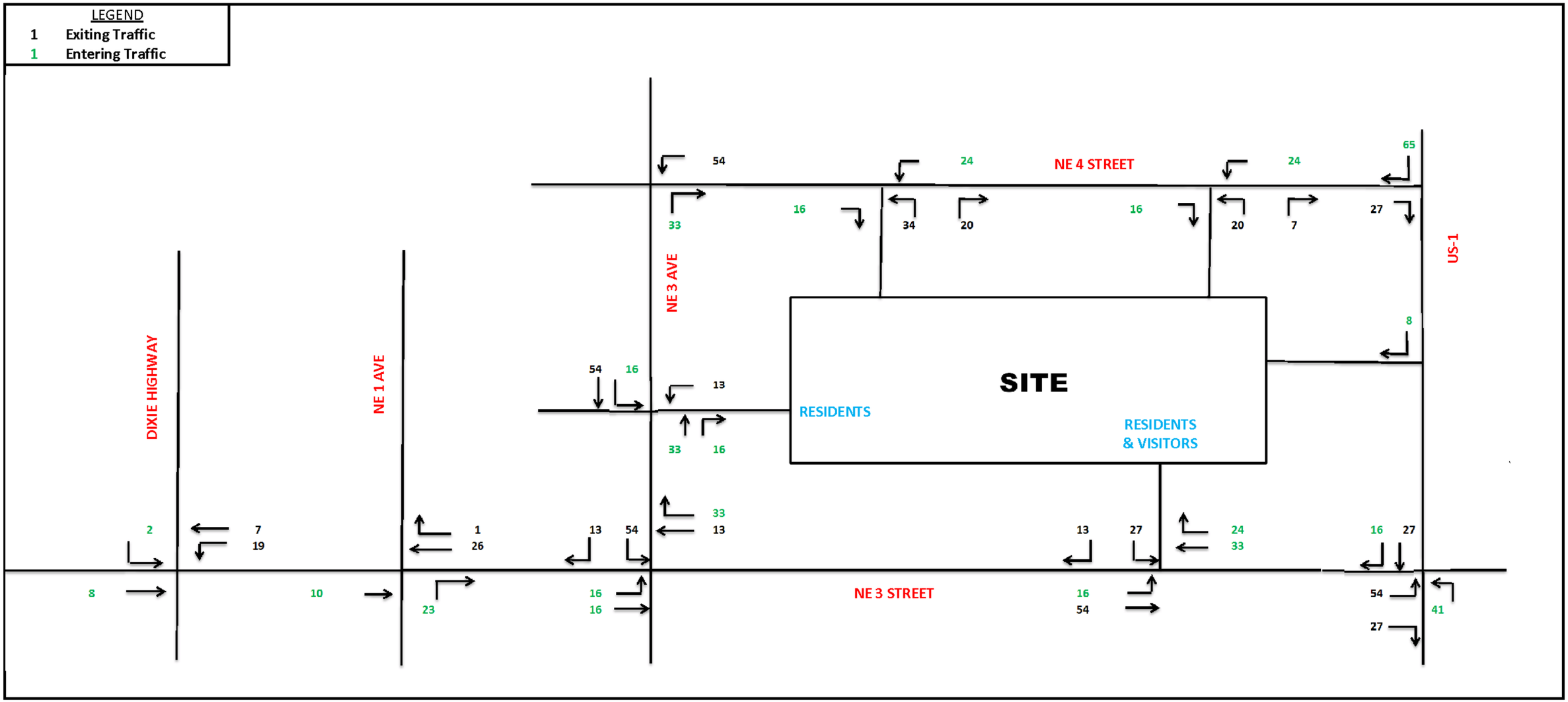

Gulfstream Point

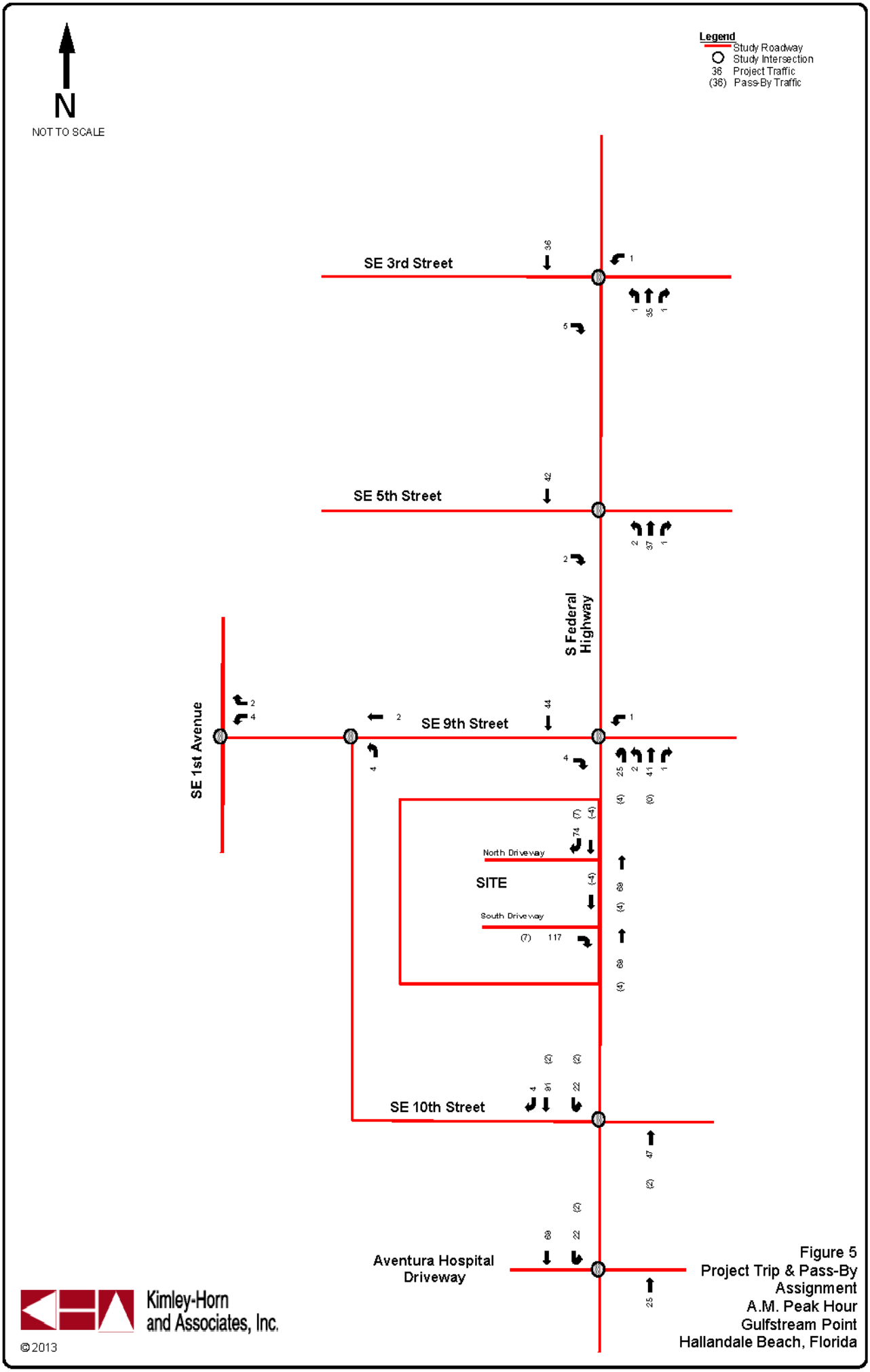

Figure 5
Project Trip & Pass-By Assignment
A.M. Peak Hour
Gulfstream Point
Hallandale Beach, Florida

Kimley-Horn and Associates, Inc.

©2013

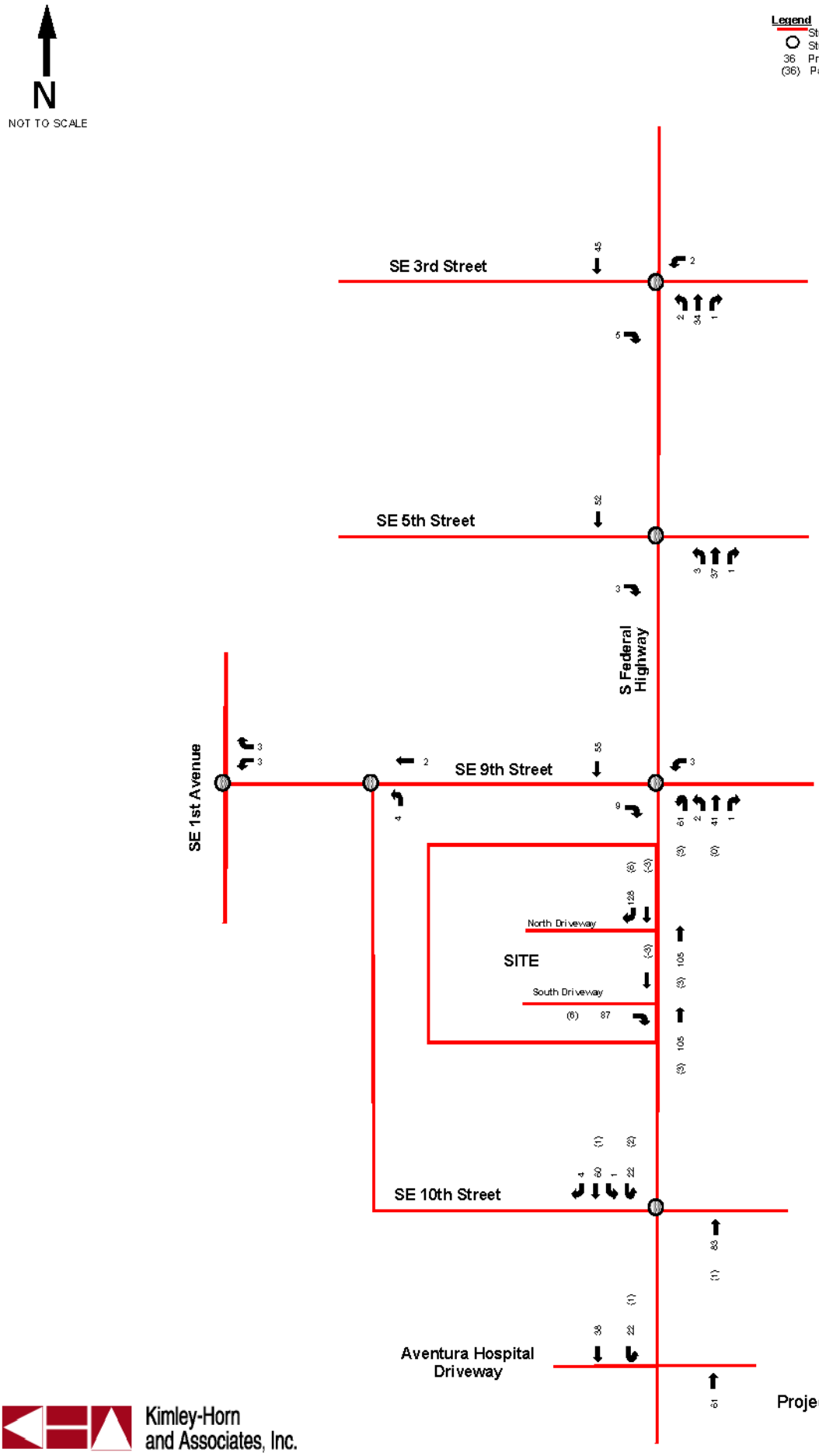

Kimley-Horn and Associates, Inc.

©2013

Figure 6
Project Trip & Pass-By Assignment
P.M. Peak Hour
Gulfstream Point
Hallandale Beach, Florida

APPENDIX I

Future Traffic Volumes Spreadsheets

FUTURE TURNING MOVEMENT VOLUME ANALYSIS

E. Hallandale Beach Boulevard and Dixie Highway
AM Peak Hour

	Northbound			Dixie Highway Southbound			E. Hallandale Bch Blvd Eastbound			E. Hallandale Bch Blvd Westbound		
Description	Left	Through	Right	Left	Through	Right	Left	Through	Right	Left	Through	Right
Existing Traffic (1/21/2015)				218	570	38	0	1,228	34	105	1,353	
Season Adjustment Factor	1.03	1.03	1.03	1.03	1.03	1.03	1.03	1.03	1.03	1.03	1.03	1.03
2015 Peak Season Traffic	0	0	0	225	587	39	0	1265	35	108	1394	0
Annual Growth Rate	1.0%	1.0%	1.0%	1.0%	1.0%	1.0%	1.0%	1.0%	1.0%	1.0%	1.0%	1.0%
Committed Developments:												
7th Avenue Village								11			19	
Gulfstream Park								188			208	
Gulfstream Point												
Hallandale ArtSquare												
2020 Background Traffic	0	0	0	236	617	41	0	1,528	37	114	1,692	0
Hallandale Oasis												
Primary Trips				3				14		2	27	
2020 Total Traffic	**0**	**0**	**0**	**239**	**617**	**41**	**0**	**1,542**	**37**	**116**	**1,719**	**0**

FUTURE TURNING MOVEMENT VOLUME ANALYSIS

E. Hallandale Beach Boulevard and Dixie Highway
PM Peak Hour

	Northbound			Dixie Highway Southbound			E. Hallandale Bch Blvd Eastbound			E. Hallandale Bch Blvd Westbound		
Description	Left	Through	Right	Left	Through	Right	Left	Through	Right	Left	Through	Right
Existing Traffic (1/21/2015)				151	292	73	0	1,028	49	89	1,832	
Season Adjustment Factor	1.03	1.03	1.03	1.03	1.03	1.03	1.03	1.03	1.03	1.03	1.03	1.03
2015 Peak Season Traffic	0	0	0	156	301	75	0	1059	50	92	1887	0
Annual Growth Rate	1.0%	1.0%	1.0%	1.0%	1.0%	1.0%	1.0%	1.0%	1.0%	1.0%	1.0%	1.0%
Committed Developments:												
7th Avenue Village								55			51	
Gulfstream Park								375			416	
Gulfstream Point												
Hallandale ArtSquare												
2020 Background Traffic	0	0	0	163	316	79	0	1,543	53	96	2,450	0
Hallandale Oasis												
Primary Trips				6				30		1	18	
2020 Total Traffic	**0**	**0**	**0**	**169**	**316**	**79**	**0**	**1,573**	**53**	**97**	**2,468**	**0**

FUTURE TURNING MOVEMENT VOLUME ANALYSIS

E. Hallandale Beach Boulevard and NE 1st Avenue
AM Peak Hour

	SE 1st Avenue Northbound			Southbound			E. Hallandale Bch Blvd Eastbound			E. Hallandale Bch Blvd Westbound		
Description	Left	Through	Right	Left	Through	Right	Left	Through	Right	Left	Through	Right
Existing Traffic (1/21/2015)	174	132	66				30	1,402	0	0	1,280	22
Season Adjustment Factor	1.03	1.03	1.03	1.03	1.03	1.03	1.03	1.03	1.03	1.03	1.03	1.03
2015 Peak Season Traffic	179	136	68	0	0	0	31	1444	0	0	1318	23
Annual Growth Rate	1.0%	1.0%	1.0%	1.0%	1.0%	1.0%	1.0%	1.0%	1.0%	1.0%	1.0%	1.0%
Committed Developments:												
7th Avenue Village								11			19	
Gulfstream Park								188			208	
Gulfstream Point												
Hallandale ArtSquare												
2020 Background Traffic	188	143	71	0	0	0	32	1,717	0	0	1,613	24
Hallandale Oasis												
Primary Trips			1					17			29	5
2020 Total Traffic	**188**	**143**	**72**	**0**	**0**	**0**	**32**	**1,734**	**0**	**0**	**1,642**	**29**

FUTURE TURNING MOVEMENT VOLUME ANALYSIS

E. Hallandale Beach Boulevard and NE 1st Avenue
PM Peak Hour

	SE 1st Avenue Northbound			Southbound			E. Hallandale Bch Blvd Eastbound			E. Hallandale Bch Blvd Westbound		
Description	Left	Through	Right	Left	Through	Right	Left	Through	Right	Left	Through	Right
Existing Traffic (1/21/2015)	310	329	93				46	1,121	0	0	1,608	35
Season Adjustment Factor	1.03	1.03	1.03	1.03	1.03	1.03	1.03	1.03	1.03	1.03	1.03	1.03
2015 Peak Season Traffic	319	339	96	0	0	0	47	1155	0	0	1656	36
Annual Growth Rate	1.0%	1.0%	1.0%	1.0%	1.0%	1.0%	1.0%	1.0%	1.0%	1.0%	1.0%	1.0%
Committed Developments:												
7th Avenue Village								55			51	
Gulfstream Park								375			416	
Gulfstream Point												
Hallandale ArtSquare												
2020 Background Traffic	336	356	101	0	0	0	50	1,644	0	0	2,208	38
Hallandale Oasis												
Primary Trips			2					36			19	4
2020 Total Traffic	**336**	**356**	**103**	**0**	**0**	**0**	**50**	**1,680**	**0**	**0**	**2,227**	**42**

FUTURE TURNING MOVEMENT VOLUME ANALYSIS

E. Hallandale Beach Boulevard and Federal Highway
AM Peak Hour

	Federal Highway Northbound			Federal Highway Southbound			E. Hallandale Bch Blvd Eastbound			E. Hallandale Bch Blvd Westbound		
Description	Left	Through	Right	Left	Through	Right	Left	Through	Right	Left	Through	Right
Existing Traffic (4/15/2015)	291	645	318	435	980	42	174	886	285	543	924	87
Season Adjustment Factor	1.03	1.03	1.03	1.03	1.03	1.03	1.03	1.03	1.03	1.03	1.03	1.03
2015 Peak Season Traffic	300	664	328	448	1009	43	179	913	294	559	952	90
Annual Growth Rate	1.0%	1.0%	1.0%	1.0%	1.0%	1.0%	1.0%	1.0%	1.0%	1.0%	1.0%	1.0%
Committed Developments:												
7th Avenue Village								11			19	
Gulfstream Park		104			94			22	188		35	
Gulfstream Point		35			36							
Hallandale ArtSquare		17			50							
2020 Background Traffic	315	854	344	471	1,241	45	188	992	497	588	1,054	94
Hallandale Oasis												
Primary Trips			8	11				18		16	34	22
2020 Total Traffic	**315**	**854**	**352**	**482**	**1,241**	**45**	**188**	**1,010**	**497**	**604**	**1,088**	**116**

FUTURE TURNING MOVEMENT VOLUME ANALYSIS

E. Hallandale Beach Boulevard and Federal Highway
PM Peak Hour

	Federal Highway Northbound			Federal Highway Southbound			E. Hallandale Bch Blvd Eastbound			E. Hallandale Bch Blvd Westbound		
Description	Left	Through	Right	Left	Through	Right	Left	Through	Right	Left	Through	Right
Existing Traffic (4/15/2015)	514	936	323	361	1,028	73	169	898	245	562	1,021	160
Season Adjustment Factor	1.03	1.03	1.03	1.03	1.03	1.03	1.03	1.03	1.03	1.03	1.03	1.03
2015 Peak Season Traffic	529	964	333	372	1059	75	174	925	252	579	1052	165
Annual Growth Rate	1.0%	1.0%	1.0%	1.0%	1.0%	1.0%	1.0%	1.0%	1.0%	1.0%	1.0%	1.0%
Committed Developments:												
7th Avenue Village								55			51	
Gulfstream Park		208			188			43	375		69	
Gulfstream Point		34			45							
Hallandale ArtSquare		41			54							
2020 Background Traffic	556	1,296	350	391	1,400	79	183	1,070	640	608	1,225	173
Hallandale Oasis												
Primary Trips			18	24				38		11	23	14
2020 Total Traffic	**556**	**1,296**	**368**	**415**	**1,400**	**79**	**183**	**1,108**	**640**	**619**	**1,248**	**187**

FUTURE TURNING MOVEMENT VOLUME ANALYSIS

E. Hallandale Beach Boulevard and NE 8th Avenue
AM Peak Hour

	NE 8th Avenue Northbound			NE 8th Avenue Southbound			E. Hallandale Bch Blvd Eastbound			E. Hallandale Bch Blvd Westbound		
Description	Left	Through	Right	Left	Through	Right	Left	Through	Right	Left	Through	Right
Existing Traffic (4/15/2015)	12		24	161	0	174		1,596	20	19	1,336	
Season Adjustment Factor	1.03	1.03	1.03	1.03	1.03	1.03	1.03	1.03	1.03	1.03	1.03	1.03
2015 Peak Season Traffic	12	0	25	166	0	179	0	1644	21	20	1376	0
Annual Growth Rate	1.0%	1.0%	1.0%	1.0%	1.0%	1.0%	1.0%	1.0%	1.0%	1.0%	1.0%	1.0%
Committed Developments:												
7th Avenue Village								11			19	
Gulfstream Park								22			35	
Gulfstream Point												
Hallandale ArtSquare												
2020 Background Traffic	13	0	26	174	0	188	0	1,761	22	21	1,500	0
Hallandale Oasis												
Primary Trips				1				37			72	
2020 Total Traffic	**13**	**0**	**26**	**175**	**0**	**188**	**0**	**1,798**	**22**	**21**	**1,572**	**0**

FUTURE TURNING MOVEMENT VOLUME ANALYSIS

E. Hallandale Beach Boulevard and NE 8th Avenue
PM Peak Hour

	NE 8th Avenue Northbound			NE 8th Avenue Southbound			E. Hallandale Bch Blvd Eastbound			E. Hallandale Bch Blvd Westbound		
Description	Left	Through	Right	Left	Through	Right	Left	Through	Right	Left	Through	Right
Existing Traffic (4/15/2015)	24		43	134	4	114		1,452	22	17	1,724	
Season Adjustment Factor	1.03	1.03	1.03	1.03	1.03	1.03	1.03	1.03	1.03	1.03	1.03	1.03
2015 Peak Season Traffic	25	0	44	138	4	117	0	1496	23	18	1776	0
Annual Growth Rate	1.0%	1.0%	1.0%	1.0%	1.0%	1.0%	1.0%	1.0%	1.0%	1.0%	1.0%	1.0%
Committed Developments:												
7th Avenue Village								55			51	
Gulfstream Park								43			69	
Gulfstream Point												
Hallandale ArtSquare												
2020 Background Traffic	26	0	47	145	4	123	0	1,670	24	18	1,986	0
Hallandale Oasis												
Primary Trips				3				80			48	
2020 Total Traffic	**26**	**0**	**47**	**148**	**4**	**123**	**0**	**1,750**	**24**	**18**	**2,034**	**0**

FUTURE TURNING MOVEMENT VOLUME ANALYSIS

E. Hallandale Beach Boulevard and NE 10th Avenue
AM Peak Hour

	NE 10th Avenue Northbound			NE 10th Avenue Southbound			E. Hallandale Bch Blvd Eastbound			E. Hallandale Bch Blvd Westbound		
Description	Left	Through	Right	Left	Through	Right	Left	Through	Right	Left	Through	Right
Existing Traffic (4/15/2015)	34	16	102				78	1,589	44	104	1,296	55
Season Adjustment Factor	1.03	1.03	1.03	1.03	1.03	1.03	1.03	1.03	1.03	1.03	1.03	1.03
2015 Peak Season Traffic	35	16	105	0	0	0	80	1637	45	107	1335	57
Annual Growth Rate	1.0%	1.0%	1.0%	1.0%	1.0%	1.0%	1.0%	1.0%	1.0%	1.0%	1.0%	1.0%
Committed Developments:												
7th Avenue Village								11			19	
Gulfstream Park	35		90						22	82		
Gulfstream Point												
Hallandale ArtSquare												
2020 Background Traffic	72	17	200	0	0	0	84	1,731	70	195	1,422	60
Hallandale Oasis												
Primary Trips			7					38		31	72	2
2020 Total Traffic	**72**	**17**	**207**	**0**	**0**	**0**	**84**	**1,769**	**70**	**226**	**1,494**	**62**

FUTURE TURNING MOVEMENT VOLUME ANALYSIS

E. Hallandale Beach Boulevard and NE 10th Avenue
PM Peak Hour

	NE 10th Avenue Northbound			NE 10th Avenue Southbound			E. Hallandale Bch Blvd Eastbound			E. Hallandale Bch Blvd Westbound		
Description	Left	Through	Right	Left	Through	Right	Left	Through	Right	Left	Through	Right
Existing Traffic (4/15/2015)	71	186	281				124	1,457	50	218	1,620	96
Season Adjustment Factor	1.03	1.03	1.03	1.03	1.03	1.03	1.03	1.03	1.03	1.03	1.03	1.03
2015 Peak Season Traffic	73	192	289	0	0	0	128	1501	52	225	1669	99
Annual Growth Rate	1.0%	1.0%	1.0%	1.0%	1.0%	1.0%	1.0%	1.0%	1.0%	1.0%	1.0%	1.0%
Committed Developments:												
7th Avenue Village								55			51	
Gulfstream Park	69		180						43	163		
Gulfstream Point												
Hallandale ArtSquare												
2020 Background Traffic	146	201	484	0	0	0	134	1,632	97	399	1,805	104
Hallandale Oasis												
Primary Trips			15					83		43	48	2
2020 Total Traffic	**146**	**201**	**499**	**0**	**0**	**0**	**134**	**1,715**	**97**	**442**	**1,853**	**106**

FUTURE TURNING MOVEMENT VOLUME ANALYSIS

E. Hallandale Beach Boulevard and NE 14th Avenue
AM Peak Hour

	NE 14th Avenue Northbound			NE 14th Avenue Southbound			E. Hallandale Bch Blvd Eastbound			E. Hallandale Bch Blvd Westbound		
Description	Left	Through	Right	Left	Through	Right	Left	Through	Right	Left	Through	Right
Existing Traffic (1/21/2015)	225	45	23	79	70	129	82	1,166	205	42	1,208	30
Season Adjustment Factor	1.06	1.06	1.06	1.06	1.06	1.06	1.06	1.06	1.06	1.06	1.06	1.06
2015 Peak Season Traffic	239	48	24	84	74	137	87	1236	217	45	1280	32
Annual Growth Rate	1.0%	1.0%	1.0%	1.0%	1.0%	1.0%	1.0%	1.0%	1.0%	1.0%	1.0%	1.0%
Committed Developments:												
7th Avenue Village								11			19	
Gulfstream Park								90			82	
Gulfstream Point												
Hallandale ArtSquare												
2020 Background Traffic	251	50	26	88	78	144	91	1,400	228	47	1,447	33
Hallandale Oasis												
Primary Trips	1					6	55	34	2		18	
2020 Total Traffic	**252**	**50**	**26**	**88**	**78**	**150**	**146**	**1,434**	**230**	**47**	**1,465**	**33**

FUTURE TURNING MOVEMENT VOLUME ANALYSIS

E. Hallandale Beach Boulevard and NE 14th Avenue
PM Peak Hour

	NE 14th Avenue Northbound			NE 14th Avenue Southbound			E. Hallandale Bch Blvd Eastbound			E. Hallandale Bch Blvd Westbound		
Description	Left	Through	Right	Left	Through	Right	Left	Through	Right	Left	Through	Right
Existing Traffic (1/21/2015)	296	120	81	93	82	141	187	1,394	317	59	1,536	49
Season Adjustment Factor	1.06	1.06	1.06	1.06	1.06	1.06	1.06	1.06	1.06	1.06	1.06	1.06
2015 Peak Season Traffic	314	127	86	99	87	149	198	1478	336	63	1628	52
Annual Growth Rate	1.0%	1.0%	1.0%	1.0%	1.0%	1.0%	1.0%	1.0%	1.0%	1.0%	1.0%	1.0%
Committed Developments:												
7th Avenue Village								55			51	
Gulfstream Park								180			163	
Gulfstream Point												
Hallandale ArtSquare												
2020 Background Traffic	330	134	90	104	91	157	208	1,788	353	66	1,925	55
Hallandale Oasis												
Primary Trips	3					12	37	23	2		37	
2020 Total Traffic	**333**	**134**	**90**	**104**	**91**	**169**	**245**	**1,811**	**355**	**66**	**1,962**	**55**

FUTURE TURNING MOVEMENT VOLUME ANALYSIS

Federal Highway & NE 3rd Street
AM Peak Hour

	Federal Highway Northbound			Federal Highway Southbound			NE 3rd Street Eastbound			NE 3rd Street Westbound		
Description	Left	Through	Right	Left	Through	Right	Left	Through	Right	Left	Through	Right
Existing Traffic (4/15/2015)	50	900	5	25	1,263	40	71	67	63	43	48	14
Season Adjustment Factor	1.03	1.03	1.03	1.03	1.03	1.03	1.03	1.03	1.03	1.03	1.03	1.03
2015 Peak Season Traffic	52	927	5	26	1301	41	73	69	65	44	49	14
Annual Growth Rate	1.0%	1.0%	1.0%	1.0%	1.0%	1.0%	1.0%	1.0%	1.0%	1.0%	1.0%	1.0%
Committed Developments:												
7th Avenue Village												
Gulfstream Park		104			94							
Gulfstream Point		35			36							
Hallandale ArtSquare	17				25	7	49		25			
2020 Background Traffic	71	1,113	5	27	1,522	50	126	73	93	47	52	15
Hallandale Oasis												
Primary Trips	2	20			10				1			
2020 Total Traffic	**73**	**1,133**	**5**	**27**	**1,532**	**50**	**126**	**73**	**94**	**47**	**52**	**15**

Note: NB and SB Through taken from Counts conducted at Pembroke Road and US 1

FUTURE TURNING MOVEMENT VOLUME ANALYSIS

Federal Highway & NE 3rd Street
PM Peak Hour

	Federal Highway Northbound			Federal Highway Southbound			NE 3rd Street Eastbound			NE 3rd Street Westbound		
Description	Left	Through	Right	Left	Through	Right	Left	Through	Right	Left	Through	Right
Existing Traffic (4/15/2015)	86	1,284	11	26	1,277	37	91	96	63	46	104	10
Season Adjustment Factor	1.03	1.03	1.03	1.03	1.03	1.03	1.03	1.03	1.03	1.03	1.03	1.03
2015 Peak Season Traffic	89	1323	11	27	1315	38	94	99	65	47	107	10
Annual Growth Rate	1.0%	1.0%	1.0%	1.0%	1.0%	1.0%	1.0%	1.0%	1.0%	1.0%	1.0%	1.0%
Committed Developments:												
7th Avenue Village												
Gulfstream Park		208			188							
Gulfstream Point		34			45							
Hallandale ArtSquare	41				27	16	54		27			
2020 Background Traffic	134	1,632	12	28	1,642	56	153	104	95	50	113	11
Hallandale Oasis												
Primary Trips		14			23				1			
2020 Total Traffic	**134**	**1,646**	**12**	**28**	**1,665**	**56**	**153**	**104**	**96**	**50**	**113**	**11**

Note: NB and SB Through taken from Counts conducted at Pembroke Road and US 1

FUTURE TURNING MOVEMENT VOLUME ANALYSIS

Federal Highway and SE 3rd Street
AM Peak Hour

	Federal Highway Northbound			Federal Highway Southbound			SE 3rd Street Eastbound			SE 3rd Street Westbound		
Description	Left	Through	Right	Left	Through	Right	Left	Through	Right	Left	Through	Right
Existing Traffic (4/15/2015)	64	1,124	16	41	1,699	6	142	102	396	23	8	9
Season Adjustment Factor	1.03	1.03	1.03	1.03	1.03	1.03	1.03	1.03	1.03	1.03	1.03	1.03
2015 Peak Season Traffic	66	1158	16	42	1750	6	146	105	408	24	8	9
Annual Growth Rate	1.0%	1.0%	1.0%	1.0%	1.0%	1.0%	1.0%	1.0%	1.0%	1.0%	1.0%	1.0%
Committed Developments:												
7th Avenue Village												
Gulfstream Park		185		87	174							93
Gulfstream Point	1	35	1		36				5	1		
Hallandale ArtSquare		17			50							
2020 Background Traffic	70	1,454	18	131	2,099	6	154	110	434	26	9	103
Hallandale Oasis												
Primary Trips		7	7		13	3	1			14		
2020 Total Traffic	**70**	**1,461**	**25**	**131**	**2,112**	**9**	**155**	**110**	**434**	**40**	**9**	**103**

FUTURE TURNING MOVEMENT VOLUME ANALYSIS

Federal Highway and SE 3rd Street
PM Peak Hour

	Federal Highway Northbound			Federal Highway Southbound			SE 3rd Street Eastbound			SE 3rd Street Westbound		
Description	Left	Through	Right	Left	Through	Right	Left	Through	Right	Left	Through	Right
Existing Traffic (4/15/2015)	121	1,302	17	69	1,568	13	154	54	145	106	66	120
Season Adjustment Factor	1.03	1.03	1.03	1.03	1.03	1.03	1.03	1.03	1.03	1.03	1.03	1.03
2015 Peak Season Traffic	125	1341	18	71	1615	13	159	56	149	109	68	124
Annual Growth Rate	1.0%	1.0%	1.0%	1.0%	1.0%	1.0%	1.0%	1.0%	1.0%	1.0%	1.0%	1.0%
Committed Developments:												
7th Avenue Village												
Gulfstream Park		370		173	347							185
Gulfstream Point	2	34	2		45				5	2		
Hallandale ArtSquare		41			54							
2020 Background Traffic	133	1,854	20	248	2,143	14	167	58	162	117	71	315
Hallandale Oasis												
Primary Trips		15	15		9	2	3			9		
2020 Total Traffic	**133**	**1,869**	**35**	**248**	**2,152**	**16**	**170**	**58**	**162**	**126**	**71**	**315**

APPENDIX J

Signal Timing Data

BROWARD COUNTY TRAFFIC ENGINEERING

ACTUATED TRAFFIC SIGNAL TIMING SHEET

Intersection Number	3223	**Initial Operation Date**	UNKNOWN
Controller Type	2070 LN	**System Number**	3223
Modification Number	11	**Modification Date**	04/02/2015
Drawing/Project No	228034-1-52-01	**FPL Grid Number**	87670294306
Intersection	FEDERAL HWY. (US 1/SR 5) and NE 3 STREET (HALLANDALE)		
Municipality	HALLANDALE BEACH		

Controller Phase	1	2	3	4	5	6	7	8
Face Number		2		4		6		8
Direction		NB		EB		SB		WB
Initial Green(MIN)		10		6		10		6
Vehicle Ext.(GAP)		3.0		2.0		3.0		2.0
Maximum Green I		50		20		50		20
Maximum Green II								
Yellow Clearance		4.0		4.0		4.0		4.0
All Red Clearance		2.0		2.0		2.0		2.0
Phase Recall		MIN		OFF		MIN		OFF
Detector Delay				10RT				10RT
Walk		7		5		7		5
Pedestrian Clearance		11		20		11		20
Permissive								
Flash Operation		YELLOW		RED		YELLOW		RED
Green Return								

Attachment

Channel/Drop / **IP Address**

NOTES:

1. IP: 010.191.160.116, MASK: 255.255.255.000, GWAY: 192.168.000.001, PORT: 5238
2. DUAL ENTRY HARDWIRED EAST/WEST.
3. MOD. 11 UPDATES PHASE 2 & 6 ALL RED CLEARANCE VALUES.

Submitted By _____ **Approved By** _____

Broward County | Timing Sheet | 5/5/2015 9:39:56 AM

Station : 3223 - US 1 & NE 3 St (Standard File)

Phase	1	2 (NT)	3	4 (ET)	5	6 (ST)	7	8 (WT)	9	10	11	12	13	14	15	16
Walk		7		5		7		5								
Ped Clearance		11		20		11		20								
Min Green		10		6		10		6								
Gap Ext		3		2		3		2								
Max1		50		20		50		20								
Max2																
Yellow Clr		4		4		4		4	3.5	3.5	3.5	3.5	3.5	3.5	3.5	3.5
Red Clr		2		2		2		2	1.5	1.5	1.5	1.5	1.5	1.5	1.5	1.5
Red Revert																
Added Initial																
Max Initial																
Time Before Reduce																
Cars Before Reduce																
Time To Reduce																
Reduce By																
Min Gap																
Dynamic Max Limit																
Dynamic Max Step																
Enable		ON		ON		ON		ON								
Auto Flash Entry				ON				ON								
Auto Flash Exit		ON				ON										
Non-Actuated 1																
Non-Actuated 2																
Lock Call									ON	ON	ON	ON	ON	ON	ON	ON
Min Recall		ON				ON										
Max Recall		ON				ON										
Ped Recall																
Soft Recall																
Dual Entry				ON				ON								
Sim Gap Enable									ON	ON	ON	ON	ON	ON	ON	ON
Guar Passage																
Rest In Walk		ON				ON										
Cond Service																
Add Init Calls																
Concurrent Ps	1	1	1	1	2	2	2	2								

Preemption

Channel	1	2	3	4	5	6
Lock Input	ON	ON	ON	ON	ON	ON
Override Auto Flash			ON			
Override Higher Preempt			ON			
Flash in Dwell						
Link to Preempt						
Delay						
Min Duration						
Min Green	6	6		6		6
Min Walk						6
Ped Clear						
Track Green						
Min Dwell	8	8		6		15
Max Presence	180	180		180	180	180
Track Veh 1						
Track Veh 2						
Track Veh 3						
Track Veh 4						
Dwell Cyc Veh 1	2	4		2	2	1
Dwell Cyc Veh 2	5	8		5	5	6
Dwell Cyc Veh 3						
Dwell Cyc Veh 4						
Dwell Cyc Veh 5						
Dwell Cyc Veh 6						
Dwell Cyc Veh 7						
Dwell Cyc Veh 8						
Dwell Cyc Veh 9						
Dwell Cyc Veh 10						
Dwell Cyc Veh 11						
Dwell Cyc Veh 12						
Dwell Cyc Ped1						
Dwell Cyc Ped2						
Dwell Cyc Ped3						
Dwell Cyc Ped4						
Dwell Cyc Ped5						
Dwell Cyc Ped6						
Dwell cPed7						
Dwell Cyc Ped8						
Exit 1	4	2		2	1	2
Exit 2	8	6		6	6	6
Exit 3						
Exit 4						

Preempt LP

Channel	1	2	3	4
Min				
Max				
Enable				
Lock Mode	MAX	MAX	MAX	MAX
Coord in Preempt				
No Skip				
Priority P1				
Priority P2				
Priority P3				
Priority P4				
Lock				
Headway				
Group Lock				
Queue Jump				
Free Mode				
Alt Table				

Prepared By	Date Implemented

Broward County | Timing Sheet | 5/5/2015 9:39:56 AM

Station : 3223 - US 1 & NE 3 St (Standard File)

Coordination

Hour	Minute	Action	Pattern	Cycle	Offset	Split	Seqnc	Short	Long	Dwell	Split 1	Split 2	Split 3	Split 4	Split 5	Split 6	Split 7	Split 8	Split 9	Split 10	Split 11	Split 12	Split 13	Split 14	Split 15	Split 16
Day Plan 1											**Easy**															
		100	254																							
6		2	2	160	134	2	1	10	50			125		35		125		35								
9		3	3	160	153	3	1	10	50			120		40		120		40								
15		4	4	160	5	4	1	10	50			125		35		125		35								
20		3	3	160	153	3	1	10	50			120		40		120		40								
Day Plan 2											**Easy**															
		3	3	160	153	3	1	10	50			120		40		120		40								
1		100	254																							
6	30	3	3	160	153	3	1	10	50			120		40		120		40								
Day Plan 3											**Easy**															
		3	3	160	153	3	1	10	50			120		40		120		40								
1		100	254																							
6	30	3	3	160	153	3	1	10	50			120		40		120		40								
23		100	254																							

Broward County | Timing Sheet | 5/5/2015 9:39:56 AM

Station : 3223 - US 1 & NE 3 St (Standard File)

Hour	Minute	Action	Pattern	Cycle	Offset	Split	Sequence	Short	Long	Dwell	Split 1	Split 2	Split 3	Split 4	Split 5	Split 6	Split 7	Split 8	Split 9	Split 10	Split 11	Split 12	Split 13	Split 14	Split 15	Split 16
Day Plan 4											Easy															

Scheduler

	Month											Day of Week							Day of Month									1										2										3		
Plan	J	F	M	A	M	J	J	A	S	O	N	D	S	M	T	W	T	F	S	1	2	3	4	5	6	7	8	9	0	1	2	3	4	5	6	7	8	9	0	1	2	3	4	5	6	7	8	9	0	1	Day Plan
1	1	1	1	1	1	1	1	1	1	1	1	1		1	1	1	1	1		1	1	1	1	1	1	1	1	1	1	1	1	1	1	1	1	1	1	1	1	1	1	1	1	1	1	1	1	1	1	1	1
2	1	1	1	1	1	1	1	1	1	1	1	1							1	1	1	1	1	1	1	1	1	1	1	1	1	1	1	1	1	1	1	1	1	1	1	1	1	1	1	1	1	1	1	1	1	2
3	1	1	1	1	1	1	1	1	1	1	1	1	1							1	1	1	1	1	1	1	1	1	1	1	1	1	1	1	1	1	1	1	1	1	1	1	1	1	1	1	1	1	1	1	1	3
4	1													1	1	1	1	1		1																																2
5	1													1							1																																2
6					1									1																																	1	1	1	1	1	1	1	2
7							1											1				1																															2
8							1							1	1	1	1	1					1																														2
9							1							1										1																													2
10									1					1							1	1	1	1	1	1																											2
11										1							1																								1	1	1	1	1	1	1	1					2
12										1								1																								1	1	1	1	1	1	1					2
13											1			1				1																									1										2
14											1			1	1	1	1	1																											1								2
15											1			1																																1							2
16											1			1				1																																		1	2
17																																																					1
18																																																					1
19																																																					1
20																																																					1
21																																																					1
22																																																					1
23																																																					1
24																																																					1
25																																																					1
26																																																					1
27																																																					1
28																																																					1
29																																																					1
30																																																					1
31																																																					1
32																																																					1

User Comments:

TRAFFIC ENGINEERING DIVISION
SIGNALIZED INTERSECTION

LOCATION FEDERAL HWY (US 1) & NE 3 STREET

ORDER NO FDOT ISSUE DATE --- REVISION NO. 2 COMPLETION DATE 8/14/04

DWG. NO. 04-09-01-01 FILE NO. C-223 CITY Hallandale SCALE: 1" = 50'

DWN BY: LARRY

NORTH

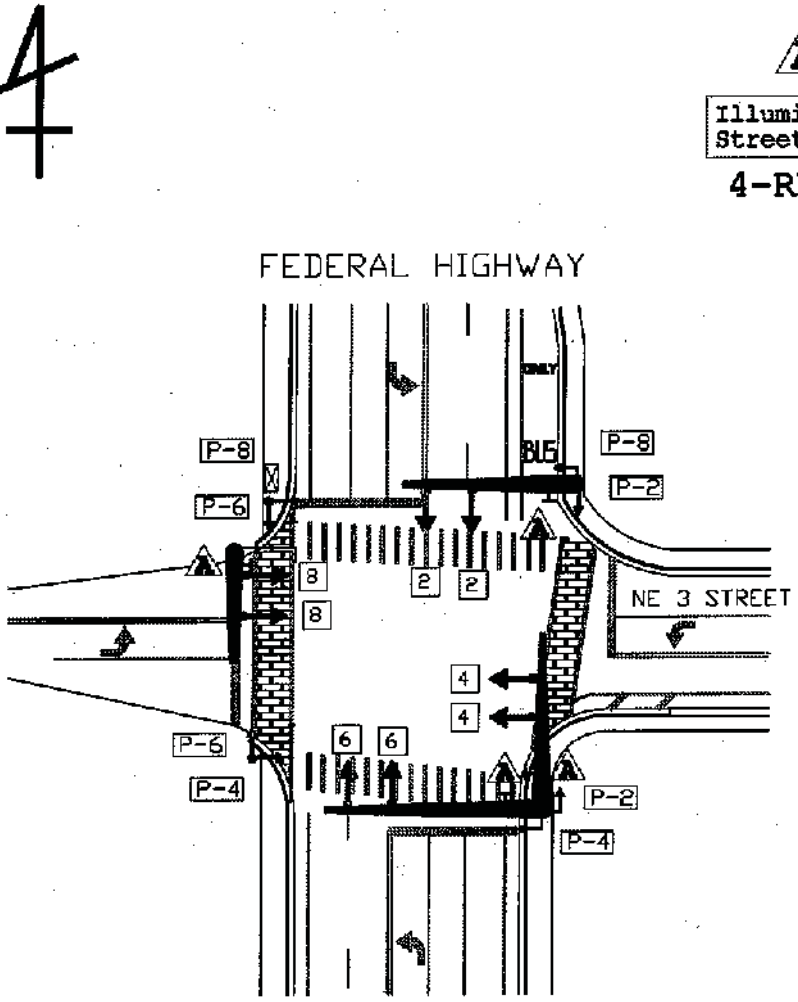

4-REQ'D

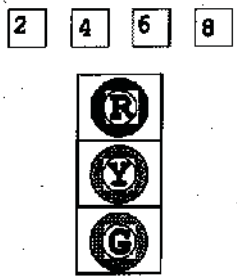

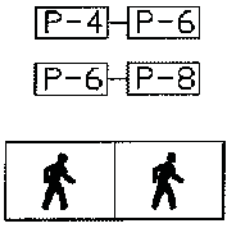

1-SECT
2-WAY
2-REQ'D

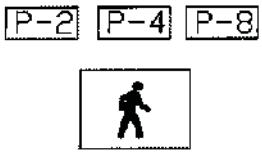

1-SECT
1-WAY
4-REQ'D

1. VIDEO DETECTION
2. REBUILT UNDER FDOT PROJ NO 228034-1-52-01

Sequence of Operation

Federal Hwy (US 1/SR 5) and NE 3 Street

Intersection Number (3223) Hallandale Beach

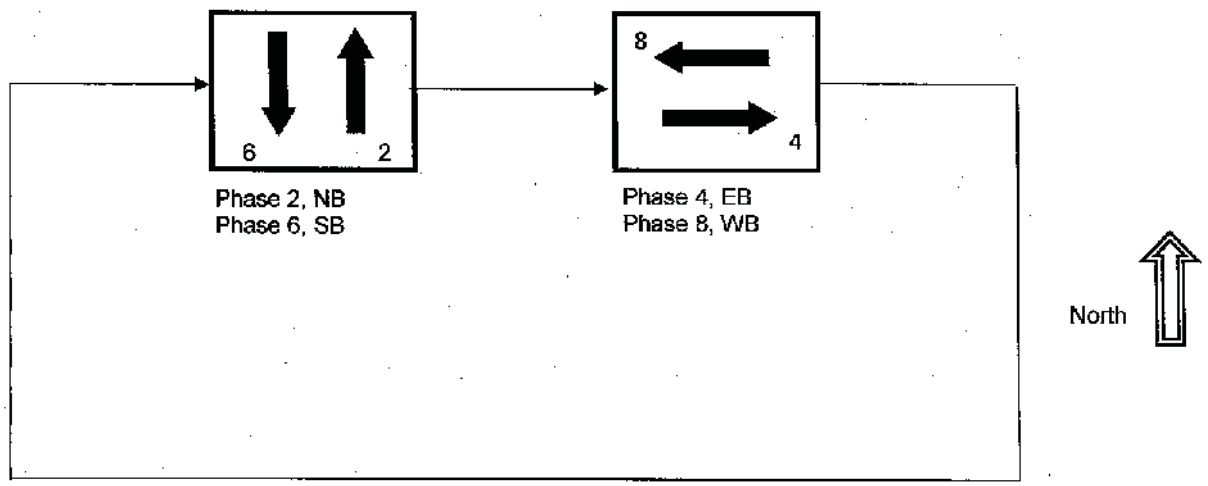

BROWARD COUNTY TRAFFIC ENGINEERING

ACTUATED TRAFFIC SIGNAL TIMING SHEET

Intersection Number	3084	**Initial Operation Date**	UNKNOWN
Controller Type	2070 LN	**System Number**	3084
Modification Number	20	**Modification Date**	07/23/2014
Drawing/Project No	86010	**FPL Grid Number**	87670291609
Intersection	FEDERAL HWY. (US 1/SR 5) and HALLANDALE BEACH BLVD.		
Municipality	HALLANDALE BEACH		

Controller Phase	1	2	3	4	5	6	7	8
Face Number	1	2	3	4	5	6	7	8
Direction	SBL	NB	WBL	EB	NBL	SB	EBL	WB
Initial Green(MIN)	5	6	5	7	5	6	5	7
Vehicle Ext.(GAP)	1.5	2.5	1.5	2.5	1.5	2.5	1.5	2.5
Maximum Green I	20	40	20	40	20	40	20	40
Maximum Green II								
Yellow Clearance	5.0	5.0	4.5	4.5	5.0	5.0	4.5	4.5
All Red Clearance	2.0	3.0	2.0	2.0	2.0	3.0	2.0	2.0
Phase Recall	OFF	OFF	OFF	MIN	OFF	OFF	OFF	MIN
Detector Delay								
Walk		7+A		7+A		7+A		7+A
Pedestrian Clearance		32		33		32		33
Permissive	DUAL		DUAL		DUAL		NO	
Flash Operation	RED	RED	RED	RED	RED	RED	RED	RED
Green Return								

Attachment

Channel/Drop /

IP Address

NOTES:

1. IP: 010.191.160.126, MASK: 255.255.255.000, GWAY: 192.168.000.001, PORT: 5237
2. DUAL ENTRY HARDWIRED NORTH/SOUTH.
3. AUDIBLE PEDESTRIAN SIGNALS: E/W BEEP, N/S TONE.
4. PHOTO ENFORCEMENT, CITY OF HALLANDALE.
5. MOD. 20 UPDATES YELLOW CLEARANCE VALUES PER FDOT STANDARDS.

Submitted By _____ **Approved By** _____

Broward County | Timing Sheet | 5/5/2015 9:28:00 AM

Station : 3084 - Hallandale Beach Blvd & US 1 (Standard File)

Phase	1 (SL)	2 (NT)	3 (WL)	4 (ET)	5 (NL)	6 (ST)	7 (EL)	8 (WT)	9	10	11	12	13	14	15	16
Walk		7		7		7		7								
Ped Clearance		32		33		32		33								
Min Green	5	6	5	7	5	6	5	7								
Gap Ext	1.5	2.5	1.5	2.5	1.5	2.5	1.5	2.5								
Max1	20	40	20	40	20	40	20	40								
Max2																
Yellow Clr	5	5	4.5	4.5	5	5	4.5	4.5	3.5	3.5	3.5	3.5	3.5	3.5	3.5	3.5
Red Clr	2	3	2	2	2	3	2	2	1.5	1.5	1.5	1.5	1.5	1.5	1.5	1.5
Red Revert																
Added Initial																
Max Initial																
Time Before Reduce																
Cars Before Reduce																
Time To Reduce																
Reduce By																
Min Gap																
Dynamic Max Limit																
Dynamic Max Step																
Enable	ON	ON	ON	ON	ON	ON	ON	ON								
Auto Flash Entry		ON				ON										
Auto Flash Exit				ON				ON								
Non-Actuated 1																
Non-Actuated 2																
Lock Call	ON		ON		ON		ON		ON	ON	ON	ON	ON	ON	ON	ON
Min Recall				ON				ON								
Max Recall																
Ped Recall																
Soft Recall																
Dual Entry		ON				ON										
Sim Gap Enable		ON		ON		ON		ON	ON	ON	ON	ON	ON	ON	ON	ON
Guar Passage																
Rest in Walk				ON				ON								
Cond Service																
Add Init Calc																
Concurrent Ph	1	1	1	1	2	2	2	2								

Preemption

Channel	1	2	3	4	5	6
Lock Input	ON	ON	ON	ON	ON	ON
Override Auto Flash						
Override Higher Preempt						
Flash in Dwell						
Link to Preempt						
Delay						
Min Duration						
Min Green	6	6	6	6	6	6
Min Walk						
Ped Clear						
Track Green						
Min Dwell	8	8	8	8	8	8
Max Presence	180	180	180	180	180	180
Track Veh 1						
Track Veh 2						
Track Veh 3						
Track Veh 4						
Dwell Cyc Veh 1	2	4	1	3	2	4
Dwell Cyc Veh 2	6	8	6	8	5	7
Dwell Cyc Veh 3						
Dwell Cyc Veh 4						
Dwell Cyc Veh 5						
Dwell Cyc Veh 6						
Dwell Cyc Veh 7						
Dwell Cyc Veh 8						
Dwell Cyc Veh 9						
Dwell Cyc Veh 10						
Dwell Cyc Veh 11						
Dwell Cyc Veh 12						
Dwell Cyc Ped1						
Dwell Cyc Ped2						
Dwell Cyc Ped3						
Dwell Cyc Ped4						
Dwell Cyc Ped5						
Dwell Cyc Ped6						
Dwell vPed7						
Dwell Cyc Ped8						
Exit 1	3	1	2	4	2	4
Exit 2	7	5	6	8	6	8
Exit 3						
Exit 4						

Preempt LP

Channel	1	2	3	4
Min				
Max				
Enable				
Lock Mode	MAX	MAX	MAX	MAX
Coord in Preempt				
No Skip				
Priority P1				
Priority P2				
Priority P3				
Priority P4				
Lock				
Headway				
Group Lock				
Queue Jump				
Free Mode				
Alt Table				

Prepared By	Date Implemented

Broward County | Timing Sheet | 5/5/2015 9:28:00 AM

Station : 3084 - Hallandale Beach Blvd & US 1 (Standard File)

Coordination

Hour	Minute	Action	Pattern	Cycle	Offset	Split	Seque	Short	Long	Dwell	Split 1	Split 2	Split 3	Split 4	Split 5	Split 6	Split 7	Split 8	Split 9	Split 10	Split 11	Split 12	Split 13	Split 14	Split 15	Split 16
Day Plan 1											**Easy**															
		100	254																							
6		2	2	160	25	2	1		25		28	49	33	50	28	49	28	55								
9		3	3	160	49	3	1		25		29	48	31	52	29	48	31	52								
15		4	4	160	58	4	1		25		30	50	28	52	30	50	28	52								
20		3	3	160	49	3	1		25		29	48	31	52	29	48	31	52								
Day Plan 2											**Easy**															
		3	3	160	49	3	1		25		29	48	31	52	29	48	31	52								
1		100	254																							
6	30	3	3	160	49	3	1		25		29	48	31	52	29	48	31	52								
Day Plan 3											**Easy**															
		3	3	160	49	3	1		25		29	48	31	52	29	48	31	52								
1		100	254																							
6	30	3	3	160	49	3	1		25		29	48	31	52	29	48	31	52								
23		100	254																							

Broward County | Timing Sheet | 5/5/2015 9:28:00 AM

Station : 3084 - Hallandale Beach Blvd & US 1 (Standard File)

Hour	Minute	Action	Pattern	Cycle	Offset	Split	Seqnc	Short	Long	Dwell	Split 1	Split 2	Split 3	Split 4	Split 5	Split 6	Split 7	Split 8	Split 9	Split 10	Split 11	Split 12	Split 13	Split 14	Split 15	Split 16
Day Plan 4											Easy															

Scheduler

	Month											Day of Week						Day of Month								1									2									3			
Plan	J	F	M	A	M	J	J	A	S	O	N	D	S	M	T	W	T	F	S	1	2	3	4	5	6	7	8	9	0	1	2	3	4	5	6	7	8	9	0	1	2	3	4	5	6	7	8	9	0	1	Day Plan
1	1	1	1	1	1	1	1	1	1	1	1	1		1	1	1	1	1		1	1	1	1	1	1	1	1	1	1	1	1	1	1	1	1	1	1	1	1	1	1	1	1	1	1	1	1	1	1	1	1
2	1	1	1	1	1	1	1	1	1	1	1	1							1	1	1	1	1	1	1	1	1	1	1	1	1	1	1	1	1	1	1	1	1	1	1	1	1	1	1	1	1	1	1	1	1	2
3	1	1	1	1	1	1	1	1	1	1	1	1	1							1	1	1	1	1	1	1	1	1	1	1	1	1	1	1	1	1	1	1	1	1	1	1	1	1	1	1	1	1	1	1	1	3
4	1													1	1	1	1	1		1																																2
5	1													1							1																																2
6					1									1																																	1	1	1	1	1	1	1	2
7							1											1				1																														2
8							1							1	1	1	1	1					1																														2
9							1							1										1																													2
10									1					1						1	1	1	1	1	1	1																											2
11											1						1																								1	1	1	1	1	1	1	1					2
12											1							1																								1	1	1	1	1	1	1	1				2
13												1		1				1																										1									2
14												1		1	1		1	1																											1								2
15												1		1																																1							2
16												1		1																																						1	2
17																																																					1
18																																																					1
19																																																					1
20																																																					1
21																																																					1
22																																																					1
23																																																					1
24																																																					1
25																																																					1
26																																																					1
27																																																					1
28																																																					1
29																																																					1
30																																																					1
31																																																					1
32																																																					1

User Comments:

TRAFFIC ENGINEERING DIVISION
SIGNALIZED INTERSECTION

LOCATION **US 1 & HALLANDALE BEACH BLVD**

ORDER NO **FDOT** ISSUE DATE ---- REV NO. **3** COMPL DATE **1/21/04**

DWG. NO. **05-01-04-01** FILE NO. **C-84** CITY **HALLANDALE** SCALE: 1" = 50'

DWN BY: LARRY

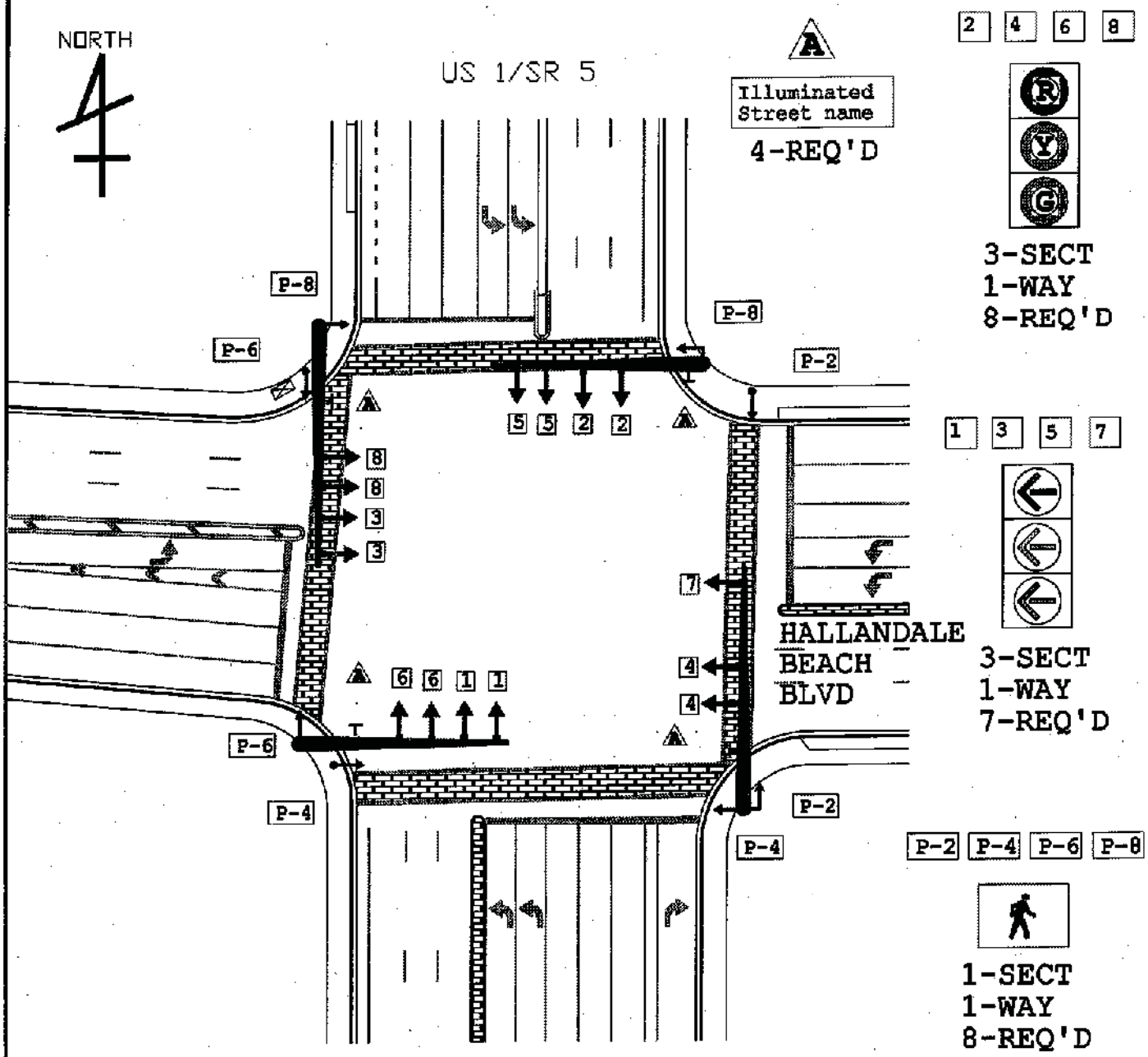

1. REBUILT UNDER FDOT PROJ NO 86010-3519
2. VIDEO DETECTION

Sequence of Operation for (3084) Federal Hwy (US 1/SR 5) and Hallandale Beach Blvd
Hallandale Beach

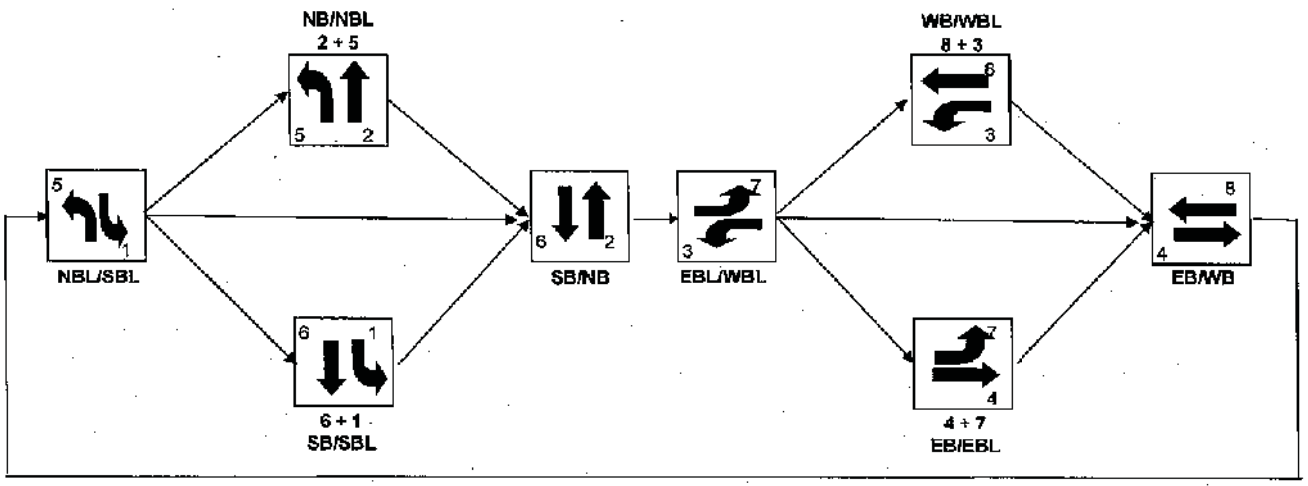

BROWARD COUNTY TRAFFIC ENGINEERING

ACTUATED TRAFFIC SIGNAL TIMING SHEET

Intersection Number	3395	**Initial Operation Date**	1/24/90
Controller Type	2070	**System Number**	3395
Modification Number	8	**Modification Date**	07/23/2014
Drawing/Project No	86010	**FPL Grid Number**	87669298900
Intersection	FEDERAL HWY. (US 1/SR 5) and SE 3 STREET		
Municipality	HALLANDALE BEACH		

Controller Phase	1	2	3	4	5	6	7	8
Face Number	1,8R	2			5	6	4,7	3,8
Direction	SBL	NB			NBL	SB	EB	WB
Initial Green(MIN)	5	12			5	12	6	6
Vehicle Ext.(GAP)	1.5	3.0			1.5	3.0	2.0	2.0
Maximum Green I	20	60			18	60	35	35
Maximum Green II								
Yellow Clearance	5.0	5.0			5.0	5.0	4.0	4.0
All Red Clearance	2.0	2.0			2.0	2.0	2.0	2.0
Phase Recall	OFF	MIN			OFF	MIN	OFF	OFF
Detector Delay								
Walk		7				7	7	7
Pedestrian Clearance		25				25	32	29
Permissive	DUAL				NO			
Flash Operation	RED	YELLOW			RED	YELLOW	RED	RED
Green Return								

Attachment

Channel/Drop / **IP Address**

NOTES:

1. IP: 010.191.160.006, MASK: 255.255.255.000, GWAY: 192.168.000.001, PORT: 5249
2. HEADS 8R (WBR) OVERLAPPED WITH SBL (PHASE 1) AND WB (PHASE 8).
3. 8R OMITTED WHEN P8 ACTIVE.
4. FLASH OPERATION: 0000-0600, 7 DAYS.
5. MOD. 8 UPDATES YELLOW CLEARANCE VALUES PER FDOT STANDARDS.

Submitted By _____ _____ **Approved By** _____

Broward County | Timing Sheet | 5/5/2015 9:28:15 AM

Station : 3395 - US 1 & SE 3 St (Standard File)

Phase	1 (SL)	2 (NT)	3	4	5 (NL)	6 (ST)	7 (ET)	8 (WT)	9	10	11	12	13	14	15	16
Walk		7				7	7	7								
Ped Clearance		25				25	32	29								
Min Green	5	12			5	12	6	6								
Gap Ext	1.5	3			1.5	3	2	2								
Max1	20	60			18	60	35	35								
Max2																
Yellow Clr	5	5			5	5	4	4	3.5	3.5	3.5	3.5	3.5	3.5	3.5	3.5
Red Clr	2	2			2	2	2	2	1.5	1.5	1.5	1.5	1.5	1.5	1.5	1.5
Red Revert																
Added Initial																
Max Initial																
Time Before Reduce																
Cars Before Reduce																
Time To Reduce																
Reduce By																
Min Gap																
Dynamic Max Limit																
Dynamic Max Step																
Enable	ON	ON			ON	ON	ON	ON								
Auto Flash Entry								ON								
Auto Flash Exit		ON				ON										
Non-Actuated 1																
Non-Actuated 2																
Lock Call									ON	ON	ON	ON	ON	ON	ON	ON
Min Recall		ON				ON										
Max Recall																
Ped Recall																
Soft Recall																
Dual Entry																
Sim Gap Enable	ON	ON	ON		ON	ON	ON	ON	ON	ON	ON	ON	ON	ON	ON	ON
Guar Passage																
Rest In Walk		ON				ON										
Cond Service																
Add Init Calc																
Concurrent Ps	1	1	1	1	2	2	2	2								

Preemption

Channel	1	2	3	4	5	6
Lock Input	ON	ON	ON	ON	ON	ON
Override Auto Flash		ON				
Override Higher Preempt		ON				
Flash in Dwell						
Link to Preempt						
Delay						
Min Duration						
Min Green	6		6	6	6	6
Min Walk						
Ped Clear						
Track Green						
Min Dwell	8		8	8	8	8
Max Presence	180		180	180	180	180
Track Veh 1						
Track Veh 2						
Track Veh 3						
Track Veh 4						
Dwell Cyc Veh 1	2		1	8	2	7
Dwell Cyc Veh 2	6		6		5	
Dwell Cyc Veh 3						
Dwell Cyc Veh 4						
Dwell Cyc Veh 5						
Dwell Cyc Veh 6						
Dwell Cyc Veh 7						
Dwell Cyc Veh 8						
Dwell Cyc Veh 9						
Dwell Cyc Veh 10						
Dwell Cyc Veh 11						
Dwell Cyc Veh 12						
Dwell Cyc Ped1						
Dwell Cyc Ped2						
Dwell Cyc Ped3						
Dwell Cyc Ped4						
Dwell Cyc Ped5						
Dwell Cyc Ped6						
Dwell vPed7						
Dwell Cyc Ped8						
Exit 1	7		2	1	2	8
Exit 2			6	5	6	
Exit 3						
Exit 4						

Preempt LP

Channel	1	2	3	4
Min				
Max				
Enable				
Lock Mode	MAX	MAX	MAX	MAX
Coord in Preempt				
No Skip				
Priority P1				
Priority P2				
Priority P3				
Priority P4				
Lock				
Headway				
Group Lock				
Queue Jump				
Free Mode				
Alt Table				

Prepared By	Date Implemented

Broward County | Timing Sheet | 5/5/2015 9:28:15 AM

Station : 3395 - US 1 & SE 3 St (Standard File)

Coordination

Hour	Minute	Action	Pattern	Cycle	Offset	Split	Seque	Short	Long	Dwell	Split 1	Split 2	Split 3	Split 4	Split 5	Split 6	Split 7	Split 8	Split 9	Split 10	Split 11	Split 12	Split 13	Split 14	Split 15	Split 16
Day Plan 1											**Easy**															
		25	255																							
6		2	2	160	113	2	1	10	50		16	53		91	16	53	47	44								
9		3	3	160	133	3	1	10	50		27	57		76	27	57	28	48								
15		4	4	160	156	4	1	10	50		24	46		90	24	46	46	44								
20		3	3	160	133	3	1	10	50		27	57		76	27	57	28	48								
Day Plan 2											**Easy**															
		25	255																							
6		100	254																							
6	30	3	3	160	133	3	1	10	50		27	57		76	27	57	28	48								
Day Plan 3											**Easy**															
		25	255																							
6		100	254																							
6	30	3	3	160	133	3	1	10	50		27	57		76	27	57	28	48								
23		100	254																							

Broward County | Timing Sheet | 5/5/2015 9:28:15 AM

Station : 3395 - US 1 & SE 3 St (Standard File)

Hour	Minute	Action	Pattern	Cycle	Offset	Split	Sequc	Short	Long	Dwell	Split 1	Split 2	Split 3	Split 4	Split 5	Split 6	Split 7	Split 8	Split 9	Split 10	Split 11	Split 12	Split 13	Split 14	Split 15	Split 16
Day Plan 4											Easy															

Scheduler

Plan	Month J	F	M	A	M	J	J	A	S	O	N	D	Day of Week S	M	T	W	T	F	S	Day of Month 1	2	3	4	5	6	7	8	9	1 0	1	2	3	4	5	6	7	8	9	2 0	1	2	3	4	5	6	7	8	9	3 0	1	Day Plan
1	1	1	1	1	1	1	1	1	1	1	1	1		1	1	1	1	1		1	1	1	1	1	1	1	1	1	1	1	1	1	1	1	1	1	1	1	1	1	1	1	1	1	1	1	1	1	1	1
2	1	1	1	1	1	1	1	1	1	1	1	1							1	1	1	1	1	1	1	1	1	1	1	1	1	1	1	1	1	1	1	1	1	1	1	1	1	1	1	1	1	1	1	1	2
3	1	1	1	1	1	1	1	1	1	1	1	1	1							1	1	1	1	1	1	1	1	1	1	1	1	1	1	1	1	1	1	1	1	1	1	1	1	1	1	1	1	1	1	1	3
4	1													1	1	1	1	1		1																															2
5	1													1							1																															2
6					1									1																																1	1	1	1	1	1	2
7							1											1				1																														2
8							1							1	1	1	1	1					1																													2
9							1							1										1																												2
10									1					1						1	1	1	1	1	1	1																										2
11											1						1																								1	1	1	1	1	1	1					2
12											1							1																								1	1	1	1	1	1	1				2
13												1		1				1																										1								2
14												1		1	1	1	1	1																											1							2
15												1		1																																1						2
16												1		1				1																																	1	2
17																																																				1
18																																																				1
19																																																				1
20																																																				1
21																																																				1
22																																																				1
23																																																				1
24																																																				1
25																																																				1
26																																																				1
27																																																				1
28																																																				1
29																																																				1
30																																																				1
31																																																				1
32																																																				1

User Comments:

BROWARD COUNTY TRAFFIC ENGINEERING

ACTUATED TRAFFIC SIGNAL TIMING SHEET

Intersection Number	3282	**Initial Operation Date**	5/79
Controller Type	2070	**System Number**	3282
Modification Number	13	**Modification Date**	12/19/2012
Drawing/Project No	228169-1-52-01	**FPL Grid Number**	87670431702
Intersection	HALLANDALE BEACH BLVD. and NE 8 AVENUE		
Municipality	HALLANDALE BEACH		

Controller Phase	1	2	3	4	5	6	7	8
Face Number		2	3,8	4,7	5	6		
Direction		WB	SB	NB	WBL	EB		
Initial Green(MIN)		10	6	6	4	10		
Vehicle Ext.(GAP)		3.0	2.0	2.0	1.5	3.0		
Maximum Green I		50	18	20	12	50		
Maximum Green II								
Yellow Clearance		4.0	4.0	4.0	4.0	4.0		
All Red Clearance		2.0	2.0	2.0	2.0	2.0		
Phase Recall		MIN	OFF	OFF	OFF	MIN		
Detector Delay								
Walk		7		7		7		
Pedestrian Clearance		17		30		17		
Permissive					5-SECT			
Flash Operation		YELLOW	RED	RED	RED	YELLOW		
Green Return								

Attachment

Channel/Drop /

IP Address

NOTES:

1. IP: 010.191.160.096, MASK: 255.255.255.000, GWAY: 192.168.000.001, PORT: 5240
2. ANTI-BACKDOWN WB: PHASE 2+6 ON ---> OMIT PHASE 5.
3. MOD. 13 DEPLOYS SIGNAL ONTO ATMS.NOW.

Submitted By _____ _____ **Approved By** _____

Broward County | Timing Sheet | 5/5/2015 9:28:30 AM

Station : 3282 - Hallandale Beach Blvd & NE 8 Ave (Standard File)

Phase	1	2 (WT)	3 (ST)	4 (NT)	5 (WL)	6 (ET)	7	8	9	10	11	12	13	14	15	16
Walk		7		7		7										
Ped Clearance		17		30		17										
Min Green		10	6	6	4	10										
Gap Ext		3	2	2	1.5	3										
Max1		50	18	20	12	50										
Max2																
Yellow Clr	4	4	4	4	4	4	4	4	3.5	3.5	3.5	3.5	3.5	3.5	3.5	3.5
Red Clr		2	2	2	2	2			1.5	1.5	1.5	1.5	1.5	1.5	1.5	1.5
Red Revert																
Added Initial																
Max Initial																
Time Before Reduce																
Cars Before Reduce																
Time To Reduce																
Reduce By																
Min Gap																
Dynamic Max Limit																
Dynamic Max Step																
Enable		ON	ON	ON	ON	ON										
Auto Flash Entry				ON												
Auto Flash Exit		ON				ON										
Non-Actuated 1																
Non-Actuated 2																
Lock Call									ON	ON	ON	ON	ON	ON	ON	ON
Min Recall		ON				ON										
Max Recall																
Ped Recall																
Soft Recall																
Dual Entry																
Sim Gap Enable									ON	ON	ON	ON	ON	ON	ON	ON
Guar Passage																
Rest In Walk		ON				ON										
Cond Service																
Add Init Calc																
Concurrent Ps	1	1	1	1	2	2	2	2								

Preemption

Channel	1	2	3	4	5	6
Lock Input	ON	ON	ON	ON	ON	ON
Override Auto Flash	ON					ON
Override Higher Preempt	ON					ON
Flash in Dwell						
Link to Preempt						
Delay						
Min Duration						
Min Green		6	6	6	6	
Min Walk						
Ped Clear						
Track Green				1		
Min Dwell		8	8	8	8	
Max Presence		180	180	180	180	
Track Veh 1				9		
Track Veh 2						
Track Veh 3						
Track Veh 4						
Dwell Cyc Veh 1		2	3	2	4	
Dwell Cyc Veh 2		6		5		
Dwell Cyc Veh 3						
Dwell Cyc Veh 4						
Dwell Cyc Veh 5						
Dwell Cyc Veh 6						
Dwell Cyc Veh 7						
Dwell Cyc Veh 8						
Dwell Cyc Veh 9						
Dwell Cyc Veh 10						
Dwell Cyc Veh 11						
Dwell Cyc Veh 12						
Dwell Cyc Ped1						
Dwell Cyc Ped2						
Dwell Cyc Ped3						
Dwell Cyc Ped4						
Dwell Cyc Ped5						
Dwell Cyc Ped6						
Dwell vPed7						
Dwell Cyc Ped8						
Exit 1		3	4	2	2	
Exit 2				6	5	
Exit 3						
Exit 4						

Preempt LP

Channel	1	2	3	4
Min				
Max				
Enable				
Lock Mode	MAX	MAX	MAX	MAX
Coord in Preempt				
No Skip				
Priority P1				
Priority P2				
Priority P3				
Priority P4				
Lock				
Headway				
Group Lock				
Queue Jump				
Free Mode				
Alt Table				

Prepared By	Date Implemented

Broward County | Timing Sheet | 5/5/2015 9:28:30 AM

Station : 3282 - Hallandale Beach Blvd & NE 8 Ave (Standard File)

Coordination

Hour	Minute	Action	Pattern	Cycle	Offset	Split	Seque	Short	Long	Dwell	Split 1	Split 2	Split 3	Split 4	Split 5	Split 6	Split 7	Split 8	Split 9	Split 10	Split 11	Split 12	Split 13	Split 14	Split 15	Split 16
Day Plan 1											**Easy**															
		100	254																							
6		2	2	160	40	2	1	10	50		18	76	41	25	18	76		66								
9		3	3	160	71	3	1	10	50		20	72	42	26	20	72		68								
15		4	4	160	100	4	1	10	50		18	76	41	25	18	76		66								
20		3	3	160	71	3	1	10	50		20	72	42	26	20	72		68								
22		100	254																							
Day Plan 2											**Easy**															
		3	3	160	71	3	1	10	50		20	72	42	26	20	72		68								
1		100	254																							
6	30	3	3	160	71	3	1	10	50		20	72	42	26	20	72		68								
Day Plan 3											**Easy**															
		3	3	160	71	3	1	10	50		20	72	42	26	20	72		68								
1		100	254																							
6	30	3	3	160	71	3	1	10	50		20	72	42	26	20	72		68								
23		100	254																							

Broward County | Timing Sheet | 5/5/2015 9:28:30 AM

Station : 3282 - Hallandale Beach Blvd & NE 8 Ave (Standard File)

Hour	Minute	Action	Pattern	Cycle	Offset	Split	Seqno	Short	Long	Dwell	Split 1	Split 2	Split 3	Split 4	Split 5	Split 6	Split 7	Split 8	Split 9	Split 10	Split 11	Split 12	Split 13	Split 14	Split 15	Split 16
Day Plan 4											Easy															

Scheduler

Plan	Month J	F	M	A	M	J	J	A	S	O	N	D	Day of Week S	M	T	W	T	F	S	Day of Month 1	2	3	4	5	6	7	8	9	1 0	1	2	3	4	5	6	7	8	9	2 0	1	2	3	4	5	6	7	8	9	3 0	1	Day Plan
1	1	1	1	1	1	1	1	1	1	1	1	1		1	1	1	1	1		1	1	1	1	1	1	1	1	1	1	1	1	1	1	1	1	1	1	1	1	1	1	1	1	1	1	1	1	1	1	1
2	1	1	1	1	1	1	1	1	1	1	1	1							1	1	1	1	1	1	1	1	1	1	1	1	1	1	1	1	1	1	1	1	1	1	1	1	1	1	1	1	1	1	1	1	2
3	1	1	1	1	1	1	1	1	1	1	1	1								1	1	1	1	1	1	1	1	1	1	1	1	1	1	1	1	1	1	1	1	1	1	1	1	1	1	1	1	1	1	1	3
4	1													1	1	1	1	1		1																															2
5	1													1							1																															2
6					1									1																														1	1	1	1	1	1	1	2
7							1											1				1																													2
8							1							1	1	1	1	1					1																												2
9							1							1										1																												2
10									1					1						1	1	1	1	1	1	1																										2
11											1						1																								1	1	1	1	1	1	1				2
12											1							1																								1	1	1	1	1	1	1				2
13												1		1				1																										1								2
14												1		1	1	1	1	1																											1							2
15												1		1																																1						2
16												1		1				1																																	1	2
17																																																				1
18																																																				1
19																																																				1
20																																																				1
21																																																				1
22																																																				1
23																																																				1
24																																																				1
25																																																				1
26																																																				1
27																																																				1
28																																																				1
29																																																				1
30																																																				1
31																																																				1
32																																																				1

User Comments:

TRAFFIC ENGINEERING DIVISION

SIGNALIZED INTERSECTION

LOCATION **HALLANDALE BEACH BLVD & NE 8 AVENUE**

ORDER NO **FDOT** ISSUE DATE --- REV NO. **2** COMPLETION DATE **3/20/07**

DWG. NO. **09-12-06-01** FILE NO. **3282** CITY **HALLANDALE BEACH** SCALE: 1" = 50'

DWN BY: LARRY

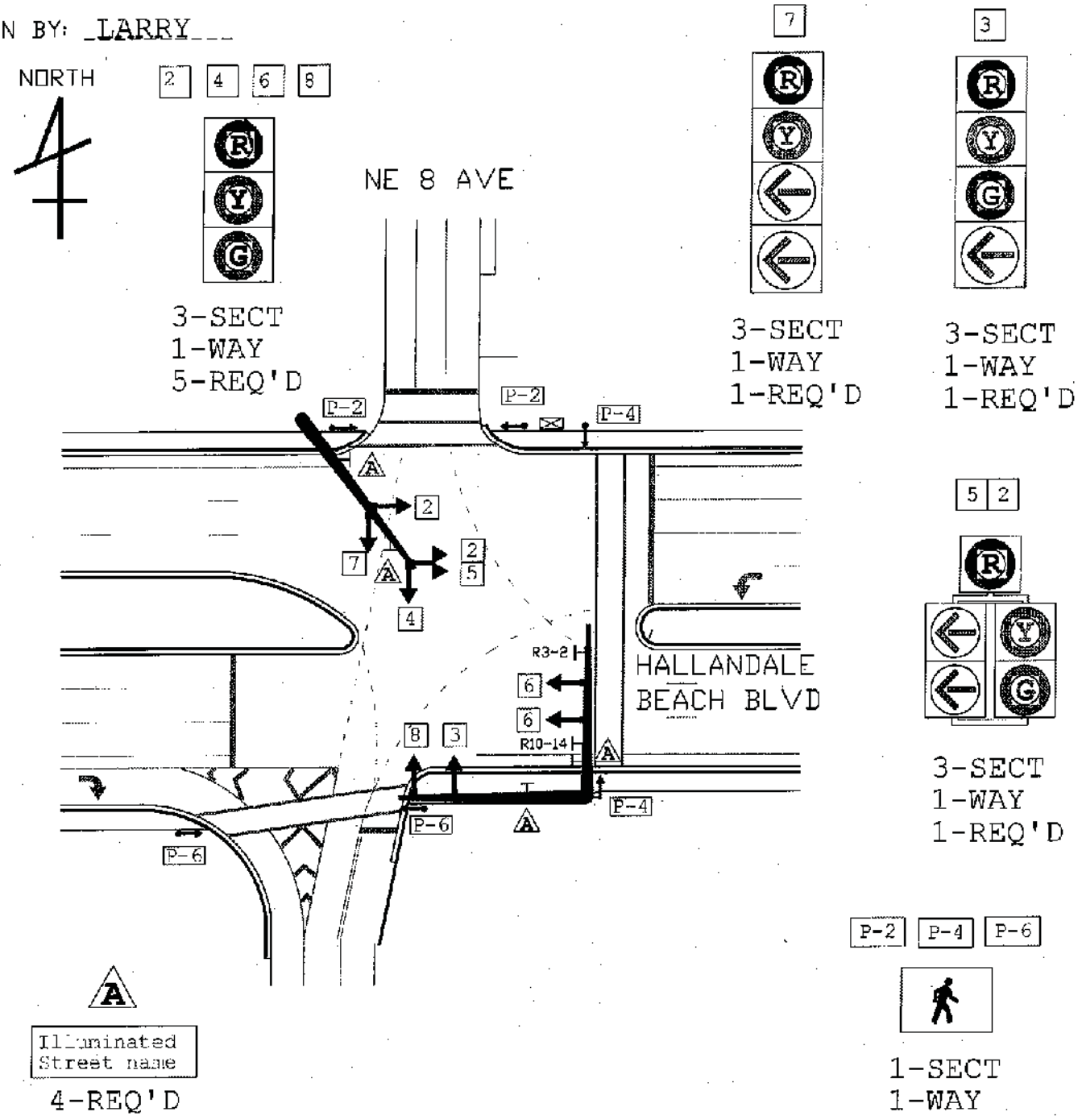

1. VIDEO DETECTION
2. REBUILT UNDER FDOT PROJ NO 2281691

Sequence of Operation for (3282) Hallandale Beach Blvd and NE 8 Avenue
Hallandale Beach Blvd

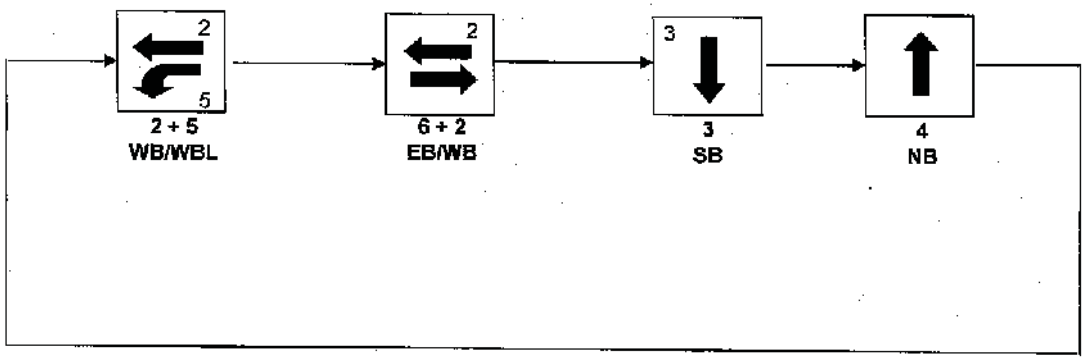

BROWARD COUNTY TRAFFIC ENGINEERING

ACTUATED TRAFFIC SIGNAL TIMING SHEET

Intersection Number	3283	**Initial Operation Date**	5/79
Controller Type	2070	**System Number**	3283
Modification Number	16	**Modification Date**	12/19/2012
Drawing/Project No	228169-1-52-01	**FPL Grid Number**	87670561703
Intersection	HALLANDALE BEACH BLVD. and NE 10 AVENUE		
Municipality	HALLANDALE BEACH		

Controller Phase	1	2	3	4	5	6	7	8
Face Number	1	2		4	5	6		
Direction	EBL	WB		NB	WBL	EB		
Initial Green(MIN)	5	10		6	5	10		
Vehicle Ext.(GAP)	2.0	3.0		2.0	2.0	3.0		
Maximum Green I	18	50		25	18	50		
Maximum Green II								
Yellow Clearance	4.0	4.0		4.0	4.0	4.0		
All Red Clearance	2.0	2.0		2.0	2.0	2.0		
Phase Recall	OFF	MIN		OFF	OFF	MIN		
Detector Delay								
Walk		7		5		7		
Pedestrian Clearance		21		33		21		
Permissive	NO				DUAL			
Flash Operation	RED	YELLOW		RED	RED	YELLOW		
Green Return								

Attachment

Channel/Drop /

IP Address

NOTES:

1. IP: 010.191.160.086, MASK: 255.255.255.000, GWAY: 192.168.000.001, PORT: 5241
2. MOD. 16 DEPLOYS SIGNAL ONTO ATMS.NOW.

Submitted By _____ _____ **Approved By** _____

Broward County | Timing Sheet | 5/5/2015 9:28:52 AM

Station : 3283 - Hallandale Beach Blvd & NE 10 Ave (Standard File)

Phase	1 (EL)	2 (WT)	3	4 (NT)	5 (WL)	6 (ET)	7	8	9	10	11	12	13	14	15	16
Walk		7		5		7										
Ped Clearance		21		33		21										
Min Green	5	10		6	5	10										
Gap Ext	2	3		2	2	3										
Max1	18	50		25	18	50										
Max2																
Yellow Clr	4	4	4	4	4	4	4	4	3.5	3.5	3.5	3.5	3.5	3.5	3.5	3.5
Red Clr	2	2		2	2	2			1.5	1.5	1.5	1.5	1.5	1.5	1.5	1.5
Red Revert																
Added Initial																
Max Initial																
Time Before Reduce																
Cars Before Reduce																
Time To Reduce																
Reduce By																
Min Gap																
Dynamic Max Limit																
Dynamic Max Step																
Enable	ON	ON		ON	ON	ON										
Auto Flash Entry				ON												
Auto Flash Exit		ON				ON										
Non-Actuated 1																
Non-Actuated 2																
Lock Call	ON				ON				ON	ON	ON	ON	ON	ON	ON	ON
Min Recall		ON				ON										
Max Recall																
Ped Recall																
Soft Recall																
Dual Entry																
Sim Gap Enable									ON	ON	ON	ON	ON	ON	ON	ON
Guar Passage																
Rest In Walk		ON				ON										
Cond Service																
Add Init Calc																
Concurrent Ps	1	1	1	1	2	2	2	2								

Preemption

Channel	1	2	3	4	5	6
Lock Input	ON	ON	ON	ON	ON	ON
Override Auto Flash	ON		ON			
Override Higher Preempt	ON		ON			
Flash in Dwell						
Link to Preempt						
Delay						
Min Duration						
Min Green		6		6	6	6
Min Walk						
Ped Clear						
Track Green						
Min Dwell		6		6	6	6
Max Presence		180		180	180	180
Track Veh 1						
Track Veh 2						
Track Veh 3						
Track Veh 4						
Dwell Cyc Veh 1		2		2	4	1
Dwell Cyc Veh 2		6		5		6
Dwell Cyc Veh 3						
Dwell Cyc Veh 4						
Dwell Cyc Veh 5						
Dwell Cyc Veh 6						
Dwell Cyc Veh 7						
Dwell Cyc Veh 8						
Dwell Cyc Veh 9						
Dwell Cyc Veh 10						
Dwell Cyc Veh 11						
Dwell Cyc Veh 12						
Dwell Cyc Ped1						
Dwell Cyc Ped2						
Dwell Cyc Ped3						
Dwell Cyc Ped4						
Dwell Cyc Ped5						
Dwell Cyc Ped6						
Dwell vPed7						
Dwell Cyc Ped8						
Exit 1		4		2	1	2
Exit 2				6	5	6
Exit 3						
Exit 4						

Preempt LP

Channel	1	2	3	4
Min				
Max				
Enable				
Lock Mode	MAX	MAX	MAX	MAX
Coord in Preempt				
No Skip				
Priority P1				
Priority P2				
Priority P3				
Priority P4				
Lock				
Headway				
Group Lock				
Queue Jump				
Free Mode				
Alt Table				

Prepared By	Date Implemented

Broward County | Timing Sheet | 5/5/2015 9:28:52 AM

Station : 3283 - Hallandale Beach Blvd & NE 10 Ave (Standard File)

Coordination

Hour	Minute	Action	Pattern	Cycle	Offset	Split	Sequnc	Short	Long	Dwell	Split 1	Split 2	Split 3	Split 4	Split 5	Split 6	Split 7	Split 8	Split 9	Split 10	Split 11	Split 12	Split 13	Split 14	Split 15	Split 16
Day Plan 1											**Easy**															
		100	254																							
6		2	2	160	44	2	1	10	50		30	84		46	22	92		46								
9		3	3	160	75	3	1	10	50		22	92		46	40	74		46								
15		4	4	160	98	4	1	10	50		36	78		46	22	92		46								
20		3	3	160	75	3	1	10	50		22	92		46	40	74		46								
22		100	254																							
Day Plan 2											**Easy**															
		3	3	160	75	3	1	10	50		22	92		46	40	74		46								
1		100	254																							
6	30	3	3	160	75	3	1	10	50		22	92		46	40	74		46								
Day Plan 3											**Easy**															
		3	3	160	75	3	1	10	50		22	92		46	40	74		46								
2		100	254																							
6	30	3	3	160	75	3	1	10	50		22	92		46	40	74		46								
23		100	254																							

Broward County | Timing Sheet | 5/5/2015 9:28:52 AM

Station : 3283 - Hallandale Beach Blvd & NE 10 Ave (Standard File)

Hour	Minute	Action	Pattern	Cycle	Offset	Split	Sequ	Short	Long	Dwell	Split 1	Split 2	Split 3	Split 4	Split 5	Split 6	Split 7	Split 8	Split 9	Split 10	Split 11	Split 12	Split 13	Split 14	Split 15	Split 16
Day Plan 4											Easy															

Scheduler

	Month											Day of Week							Day of Month									1									2									3		
Plan	J	F	M	A	M	J	J	A	S	O	N	D	S	M	T	W	T	F	S	1	2	3	4	5	6	7	8	9	0	1	2	3	4	5	6	7	8	9	0	1	2	3	4	5	6	7	8	9	0	1	Day Plan
1	1	1	1	1	1	1	1	1	1	1	1	1		1	1	1	1	1		1	1	1	1	1	1	1	1	1	1	1	1	1	1	1	1	1	1	1	1	1	1	1	1	1	1	1	1	1	1	1	1
2	1	1	1	1	1	1	1	1	1	1	1	1							1	1	1	1	1	1	1	1	1	1	1	1	1	1	1	1	1	1	1	1	1	1	1	1	1	1	1	1	1	1	1	1	1	2
3	1	1	1	1	1	1	1	1	1	1	1	1	1							1	1	1	1	1	1	1	1	1	1	1	1	1	1	1	1	1	1	1	1	1	1	1	1	1	1	1	1	1	1	1	1	3
4	1													1	1	1	1	1		1																																2
5	1													1							1																															2
6					1									1																																1	1	1	1	1	1	1	2
7							1											1				1																														2
8							1							1	1	1	1	1					1																													2
9							1							1										1																													2
10									1					1						1	1	1	1	1	1	1																											2
11											1						1																								1	1	1	1	1	1	1					2
12											1							1																								1	1	1	1	1	1	1					2
13												1		1				1																										1									2
14												1		1	1	1	1	1																											1								2
15												1		1																																	1						2
16												1		1				1																																		1	2
17																																																					1
18																																																					1
19																																																					1
20																																																					1
21																																																					1
22																																																					1
23																																																					1
24																																																					1
25																																																					1
26																																																					1
27																																																					1
28																																																					1
29																																																					1
30																																																					1
31																																																					1
32																																																					1

User Comments:

TRAFFIC ENGINEERING DIVISION

SIGNALIZED INTERSECTION

LOCATION **HALLANDALE BEACH BLVD & NE 10 AVENUE**

ORDER NO **FDOT** ISSUE DATE --- REV NO. **3** COMPLETION DATE **3/20/07**

DWG. NO. **09-12-04-01** FILE NO. **3283** CITY **HALLANDALE BEACH** SCALE: 1" = 50'

DWN BY: LARRY

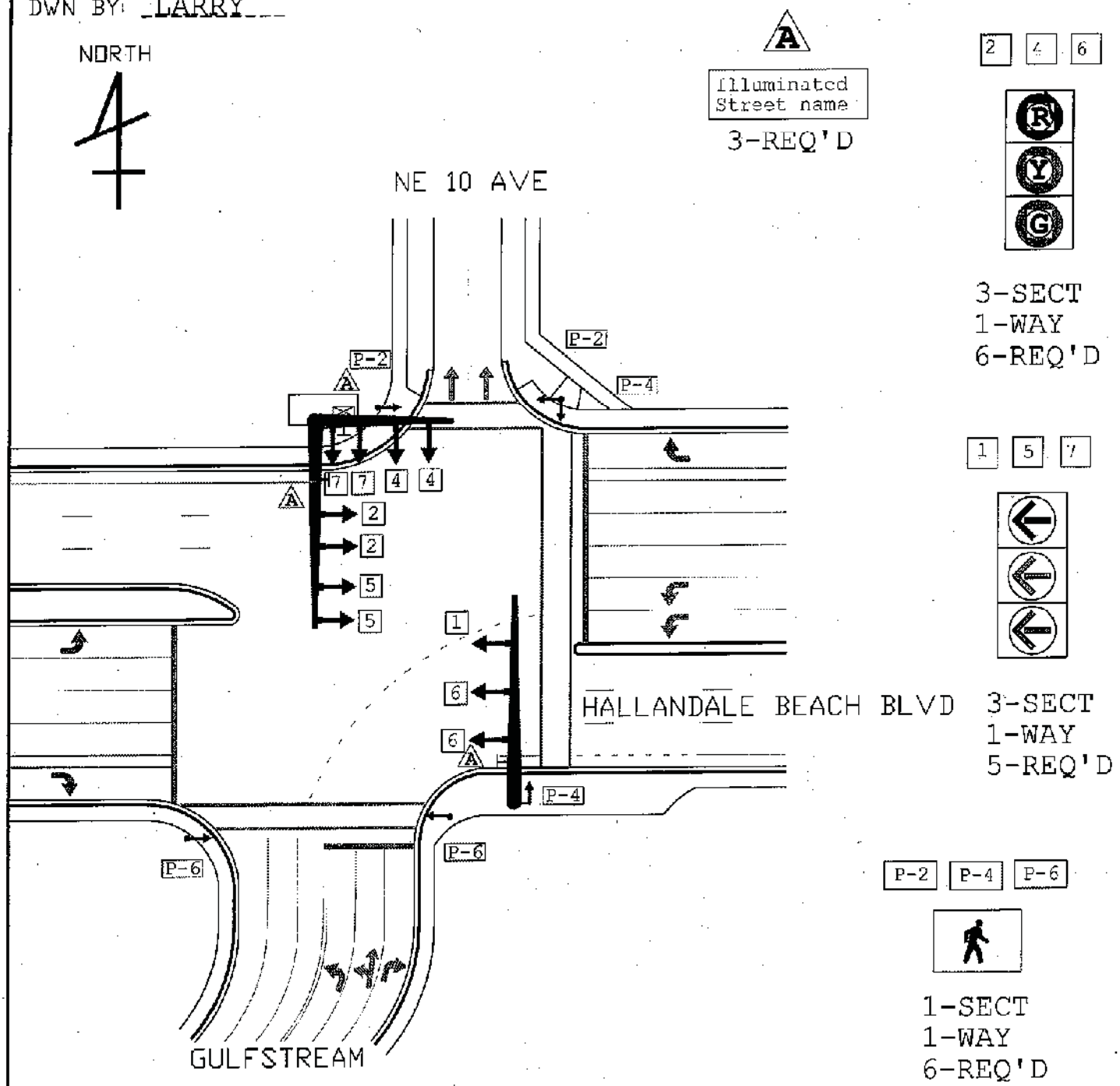

1. VIDEO DETECTION
2. REBUILT UNDER FDOT PROJ NO 2281691

Sequence of Operation for (3283) Hallandale Beach Blvd. and NE 10 Ave
Hallandale Beach

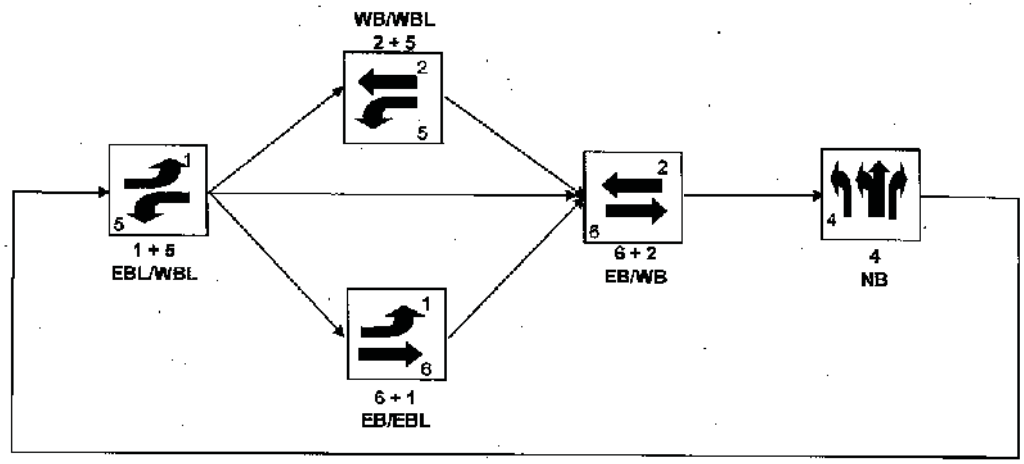

BROWARD COUNTY TRAFFIC ENGINEERING

ACTUATED TRAFFIC SIGNAL TIMING SHEET

Intersection Number	3085	**Initial Operation Date**	UNKNOWN
Controller Type	2070 LN	**System Number**	3085
Modification Number	13	**Modification Date**	11/25/2013
Drawing/Project No	413791-1-52-01	**FPL Grid Number**	87570901301
Intersection	HALLANDALE BEACH BLVD. and DIXIE HWY./E 1 AVENUE		
Municipality	HALLANDALE BEACH		

Controller Phase	1	2	3	4	5	6	7	8
Face Number								
Direction	WBL	E/W	EBL	SB	NB			
Initial Green(MIN)	5	10	5	6	6			
Vehicle Ext.(GAP)	0.0	3.0	0.0	0.0	0.0			
Maximum Green I	15	50	15	20	20			
Maximum Green II								
Yellow Clearance	4.0	4.0	4.0	4.5	4.0			
All Red Clearance	*.	*.	*.	2.0	2.0			
Phase Recall	OFF	MIN	OFF	OFF	OFF			
Detector Delay				20-RT	20-RT			
Walk		7		5	5			
Pedestrian Clearance		13		24	23			
Permissive	NO		NO					
Flash Operation	RED	YELLOW	RED	RED	RED			
Green Return								

Attachment **HBB and Dixie Mod 11 SOP.pdf**

Channel/Drop / **IP Address**

NOTES:

1. IP: 010.191.160.136, MASK: 255.255.255.000, GWAY: 192.168.000.001, PORT: 5236
2. * DOUBLE CLEARANCE EAST/WEST FARSIDE: 5 GREEN, 4 YELLOW, 1 ALL RED.
3. RAILROAD PRE-EMPTION (PHASES 9 +):
   (A) TIME BEFORE: 0.0 SECONDS.
   (B) TRACK CLEAR: 8 GREEN, 4 YELLOW, 1 ALL RED.
   (C) DWELL: NORTH/SOUTH.
   (D) RETURN PHASE: 2 (EAST/WEST).
4. PHOTO ENFORCEMENT, CITY OF HALLANDALE BEACH.
5. MOD. 13 UPDATES CLEARANCES PER FDOT ENFORCEMENT GUIDELINES.

Submitted By ____ _____ **Approved By** _____

Broward County | Timing Sheet | 5/22/2015 11:54:59 AM

Station : 3085 - Hallandale Beach Blvd & Dixie Hwy (Standard File)

Phase	1 (WL)	2 (WT)	3 (EL)	4 (ST)	5 (NT)	6	7	8	9	10	11	12	13	14	15	16
Walk		7		5	5											
Ped Clearance		13		24	23											
Min Green	5	10	5	6	6											
Passage		3														
Max1	15	50	15	20	20											
Max2																
Yellow	4	4	4	4.5	4	3.5	3.5	3.5	4	4	3.5	3.5	3.5	3.5	3.5	3.5
Red	1		1	2	2						1.5	1.5	1.5	1.5	1.5	1.5
Red Revert																
Added Initial																
Max Initial																
Time Before Reduce																
Cars Before Reduce																
Time To Reduce																
Reduce By																
Min Gap																
Dynamic Max Limit																
Dynamic Max Step																
Enable	ON	ON	ON	ON	ON											
Auto Entry					ON											
Auto Exit		ON														
Non Act1																
Non Act2																
Lock Call					ON						ON	ON	ON	ON	ON	ON
Min Recall		ON														
Max Recall																
Ped Recall																
Soft Recall																
Dual Entry																
Sim Gap Enable									ON	ON	ON	ON	ON	ON	ON	ON
Guar Passage																
Rest In Walk		ON														
Cond Service																
Add Init Calc																

Preemption

Channel	1	2	3	4	5	6
Lock Input	ON	ON	ON	ON	ON	ON
Override Flash						
Override Higher	ON					
Flash Dwell						
Link						
Delay						
Min Duration						
Min Green		6	6	6	6	6
Min Walk						
Ped Clear						
Track Green	8					
Min Dwell		8	8	8	8	8
Max Presence		180	180	180	180	180
Track R1	9					
Track R2						
Track R3						
Track R4						
Dwell Ped1						
Exit R1	2	3	5	2	1	4
Exit R2						
Exit R3						
Exit R4						

Preempt LP

Channel	1	2	3	4
Min				
Max				
Type				
Lockout Mode	MAX	MAX	MAX	MAX
Coord in Preempt				
Priority P1				
Priority P2				
Priority P3				
Priority P4				
Priority P5				
Priority P6				
Priority P7				
Priority P8				
Priority P9				
Priority P10				
Priority P11				
Priority P12				
Max Lockout				

Prepared By	Date Implemented
Reviewed By	Traffic Engineer

Broward County | Timing Sheet | 5/22/2015 11:54:59 AM

Station : 3085 - Hallandale Beach Blvd & Dixie Hwy (Standard File)

Coordination

Hour	Minute	Action	Pattern	Cycle	Offset	Split	Seqnc	Short	Long	Dwell	Split 1	Split 2	Split 3	Split 4	Split 5	Split 6	Split 7	Split 8	Split 9	Split 10	Split 11	Split 12	Split 13	Split 14	Split 15	Split 16
Day Plan 1											**Easy**															
		100	254																							
6		2	2	160	31	2	1	10	50		16	61	20	32	31											
9		3	3	160	27	3	1	10	50		17	50	20	38	35											
15		4	4	160	8	4	1	10	50		15	50	20	38	37											
20		3	3	160	27	3	1	10	50		17	50	20	38	35											
Day Plan 2											**Easy**															
		3	3	160	27	3	1	10	50		17	50	20	38	35											
1		100	254																							
6	30	3	3	160	27	3	1	10	50		17	50	20	38	35											
Day Plan 3											**Easy**															
		3	3	160	27	3	1	10	50		17	50	20	38	35											
1		100	254																							
6	30	3	3	160	27	3	1	10	50		17	50	20	38	35											
23		100	254																							

Broward County | Timing Sheet | 5/22/2015 11:54:59 AM

Station : 3085 - Hallandale Beach Blvd & Dixie Hwy (Standard File)

Hour	Minute	Action	Pattern	Cycle	Offset	Split	Seque	Short	Long	Dwell	Split 1	Split 2	Split 3	Split 4	Split 5	Split 6	Split 7	Split 8	Split 9	Split 10	Split 11	Split 12	Split 13	Split 14	Split 15	Split 16
Day Plan 4											Easy															

Scheduler

	Month											Day of Week						Day of Month								1									2									3		
Plan	J	F	M	A	M	J	J	A	S	O	N	D	S	M	T	W	T	F	S	1	2	3	4	5	6	7	8	9	0	1	2	3	4	5	6	7	8	9	0	1	2	3	4	5	6	7	8	9	0	1	Day Plan
1	1	1	1	1	1	1	1	1	1	1	1	1		1	1	1	1	1		1	1	1	1	1	1	1	1	1	1	1	1	1	1	1	1	1	1	1	1	1	1	1	1	1	1	1	1	1	1	1	1
2	1	1	1	1	1	1	1	1	1	1	1	1							1	1	1	1	1	1	1	1	1	1	1	1	1	1	1	1	1	1	1	1	1	1	1	1	1	1	1	1	1	1	1	1	1	1
3	1	1	1	1	1	1	1	1	1	1	1	1	1							1	1	1	1	1	1	1	1	1	1	1	1	1	1	1	1	1	1	1	1	1	1	1	1	1	1	1	1	1	1	1	1	1	3
4	1													1	1	1	1	1		1																																2
5	1													1							1																																2
6					1									1																																							2
7							1											1				1																															2
8							1							1	1	1	1	1					1																														2
9							1							1										1																													2
10									1					1						1	1	1	1	1	1	1																1	1	1	1	1	1	1				2
11										1							1																										1	1	1	1	1	1	1	1			2
12										1								1																											1							2
13												1		1				1																												1						2
14												1		1	1	1	1	1																													1					2
15												1		1																																		1					2
16												1		1				1																																			1
17																																																					1
18																																																					1
19																																																					1
20																																																					1
21																																																					1
22																																																					1
23																																																					1
24																																																					1
25																																																					1
26																																																					1
27																																																					1
28																																																					1
29																																																					1
30																																																					1
31																																																					1
32																																																					1

User Comments:

TRAFFIC ENGINEERING DIVISION
SIGNALIZED INTERSECTION

LOCATION **HALLANDALE BEACH BLVD & DIXIE HWY/SE 1 AVE**

ORDER NO FDOT ISSUE DATE ---- REV NO. 6 COMPLETION DATE

DWG. NO. 09-04-02-01 FILE NO. 3085 CITY HALLANDALE BEACH SCALE: 1" = 40'

DWN BY: LARRY

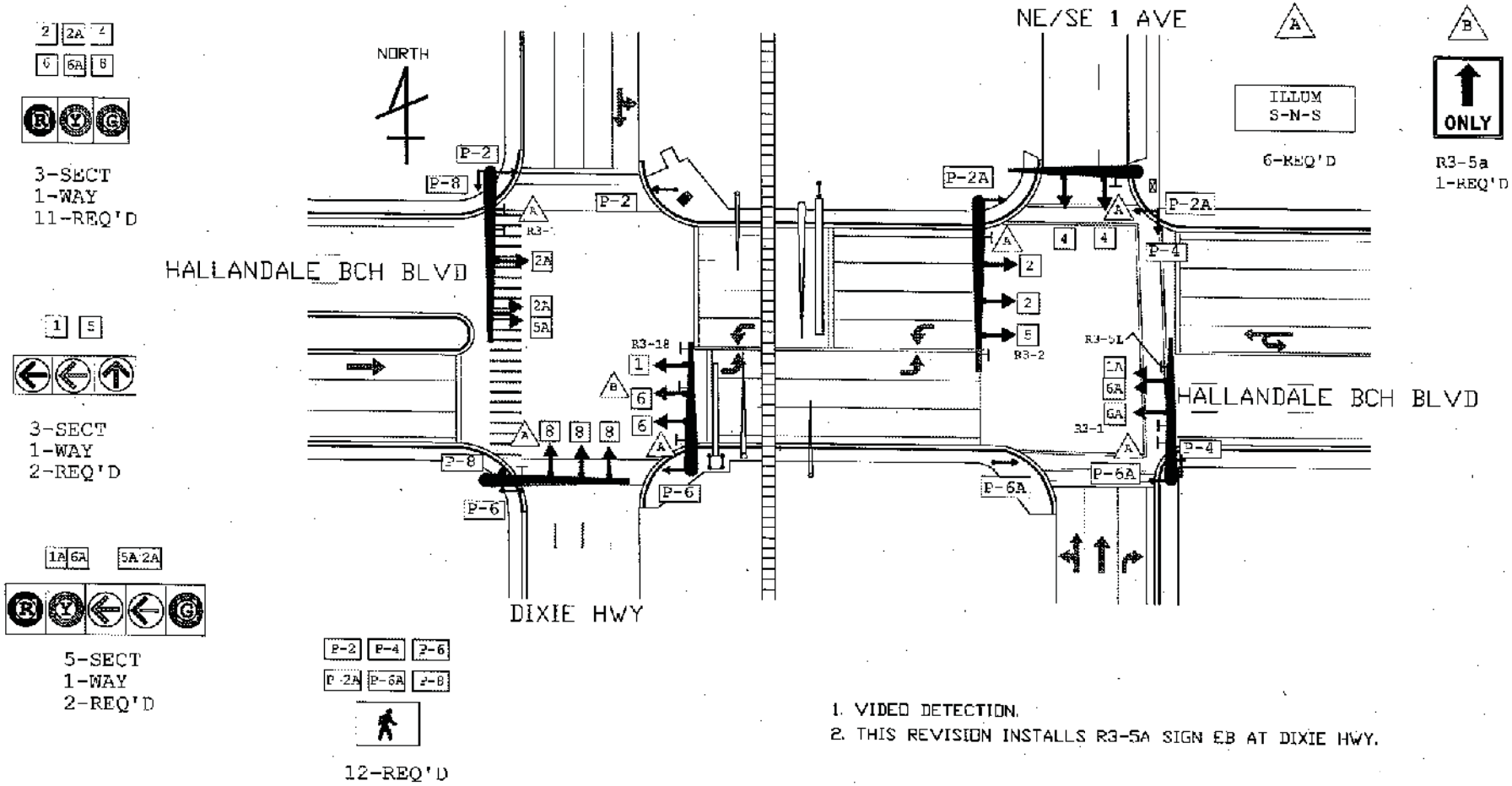

1. VIDEO DETECTION.
2. THIS REVISION INSTALLS R3-5A SIGN EB AT DIXIE HWY.

C-085 Hallandale and Dixie (Mod. 11)

NORMAL SEQUENCE of OPERATION

PHASE	DIXIE HIGHWAY	RAILROAD	E 1 AVENUE
ϕ 1 WBL	8		2
ϕ 2 EW*	1		2
ϕ 3 EBL**	1		3
ϕ 4 SB***	5		3
ϕ 5 NB	8		7

PREEMPTION SEQUENCE of OPERATION

Track Clear (8 seconds)			
DWELL			
RETURN ϕ 2			

* Double Clearance WB Farside when no call on Phase 3 (EBL): 5 Green, 4 Yellow, 1 All Red.
**Double Clearance EB Farside when no call on Phase 4 (SB): 5 Green, 4 Yellow, 1 All Red.
***Double Clearance EB Farside when call on Phase 5 (NB): 5 Green, 4 Yellow, 1 All Red.

BROWARD COUNTY TRAFFIC ENGINEERING

ACTUATED TRAFFIC SIGNAL TIMING SHEET

Intersection Number	3083	**Initial Operation Date**	UNKNOWN
Controller Type	2070	**System Number**	3083
Modification Number	20	**Modification Date**	11/25/2013
Drawing/Project No	228169-1-52-01	**FPL Grid Number**	87670841803
Intersection	HALLANDALE BEACH BLVD. and NE 14 AVENUE		
Municipality	HALLANDALE BEACH		

Controller Phase	1	2	3	4	5	6	7	8
Face Number	1	2	3	4	5	6	7	8
Direction	EBL	WB	SBL	NB	WBL	EB	NBL	SB
Initial Green(MIN)	5	10	5	6	5	10	5	6
Vehicle Ext.(GAP)	1.5	3.0	1.5	2.0	1.5	3.0	1.5	2.0
Maximum Green I	18	50	18	25	18	50	18	25
Maximum Green II								
Yellow Clearance	4.0	4.0	4.0	4.0	4.0	4.0	4.0	4.0
All Red Clearance	2.0	2.0	2.0	2.0	2.0	2.0	2.0	2.0
Phase Recall	OFF	MIN	OFF	OFF	OFF	MIN	OFF	OFF
Detector Delay								
Walk		7+A		7+A		7+A		7+A
Pedestrian Clearance		22		32		22		40
Permissive	NO		NO		NO		DUAL	
Flash Operation	RED	YELLOW	RED	RED	RED	YELLOW	RED	RED
Green Return								

Attachment

Channel/Drop /

IP Address

NOTES:

1. IP: 010.191.160.076,MASK: 255.255.255.000,GWAY: 192.168.000.001, PORT: 5242
2. DUAL ENTRY HARDWIRED NORTH/SOUTH.
3. AUDIBLE PEDESTRIAN SIGNALS: E/W BEEP, N/S TONE.
4. MOD. 20 UPDATES ALL RED VALUES.

Submitted By _____ **Approved By** _____

Broward County | Timing Sheet | 5/22/2015 11:55:21 AM

Station : 3083 - Hallandale Beach Blvd & NE 14 Ave (Standard File)

Phase	1 (EL)	2 (WT)	3 (SL)	4 (NT)	5 (WL)	6 (ET)	7 (NL)	8 (ST)	9	10	11	12	13	14	15	16
Walk		7		7		7		7								
Ped Clearance		22		32		22		40								
Min Green	5	10	5	6	5	10	5	6								
Gap Ext	1.5	3	1.5	2	1.5	3	3.5	2								
Max1	18	50	18	25	18	50	18	25								
Max2																
Yellow Clr	4	4	4	4	4	4	4	4	3.5	3.5	3.5	3.5	3.5	3.5	3.5	3.5
Red Clr	2	2	2	2	2	2	2	2	1.5	1.5	1.5	1.5	1.5	1.5	1.5	1.5
Red Revert																
Added Initial																
Max Initial																
Time Before Reduce																
Cars Before Reduce																
Time To Reduce																
Reduce By																
Min Gap																
Dynamic Max Limit																
Dynamic Max Step																
Enable	ON	ON	ON	ON	ON	ON	ON	ON								
Auto Flash Entry				ON				ON								
Auto Flash Exit		ON				ON										
Non-Actuated 1																
Non-Actuated 2																
Lock Call					ON		ON		ON	ON	ON	ON	ON	ON	ON	ON
Min Recall		ON				ON										
Max Recall																
Ped Recall																
Soft Recall																
Dual Entry				ON				ON								
Sim Gap Enable									ON	ON	ON	ON	ON	ON	ON	ON
Guar Passage																
Rest In Walk		ON				ON										
Cond Service																
Add Init Calc																
Concurrent Ps	1	1	1	1	2	2	2	2								

Preemption

Channel	1	2	3	4	5	6
Lock Input	ON	ON	ON	ON	ON	ON
Override Auto Flash						
Override Higher Preempt						
Flash in Dwell						
Link to Preempt						
Delay						
Min Duration						
Min Green	6	6	6	6	6	6
Min Walk						
Ped Clear						
Track Green						
Min Dwell	8	8	8	8	8	8
Max Presence	180	180	180	180	180	180
Track Veh 1						
Track Veh 2						
Track Veh 3						
Track Veh 4						
Dwell Cyc Veh 1	4	2	3	2	4	1
Dwell Cyc Veh 2	8	6	8	5	7	6
Dwell Cyc Veh 3						
Dwell Cyc Veh 4						
Dwell Cyc Veh 5						
Dwell Cyc Veh 6						
Dwell Cyc Veh 7						
Dwell Cyc Veh 8						
Dwell Cyc Veh 9						
Dwell Cyc Veh 10						
Dwell Cyc Veh 11						
Dwell Cyc Veh 12						
Dwell Cyc Ped1						
Dwell Cyc Ped2						
Dwell Cyc Ped3						
Dwell Cyc Ped4						
Dwell Cyc Ped5						
Dwell Cyc Ped6						
Dwell vPed7						
Dwell Cyc Ped8						
Exit 1	1	3	4	2	4	2
Exit 2	5	7	8	6	8	6
Exit 3						
Exit 4						

Preempt LP

Channel	1	2	3	4
Min				
Max				
Enable				
Lock Mode	MAX	MAX	MAX	MAX
Coord in Preempt				
No Skip				
Priority P1				
Priority P2				
Priority P3				
Priority P4				
Lock				
Headway				
Group Lock				
Queue Jump				
Free Mode				
Alt Table				

Prepared By	Date Implemented

Broward County | Timing Sheet | 5/22/2015 11:55:21 AM

Station : 3083 - Hallandale Beach Blvd & NE 14 Ave (Standard File)

Coordination

Hour	Minute	Action	Pattern	Cycle	Offset	Split	Sequc	Short	Long	Dwell	Split 1	Split 2	Split 3	Split 4	Split 5	Split 6	Split 7	Split 8	Split 9	Split 10	Split 11	Split 12	Split 13	Split 14	Split 15	Split 16
Day Plan 1											**Easy**															
		100	254																							
6		2	2	160	131	2	1	10	50		19	62	24	55	19	62	24	55								
9		3	3	160	153	3	1	10	50		23	62	27	48	23	62	27	48								
15		4	4	160	121	4	1	10	50		21	60	24	55	21	60	24	55								
20		3	3	160	153	3	1	10	50		23	62	27	48	23	62	27	48								
22		100	254																							
Day Plan 2											**Easy**															
		3	3	160	153	3	1	10	50		23	62	27	48	23	62	27	48								
1		100	254																							
6	30	3	3	160	153	3	1	10	50		23	62	27	48	23	62	27	48								
Day Plan 3											**Easy**															
		3	3	160	153	3	1	10	50		23	62	27	48	23	62	27	48								
1		100	254																							
6	30	3	3	160	153	3	1	10	50		23	62	27	48	23	62	27	48								
23		100	254																							

Broward County | Timing Sheet | 5/22/2015 11:55:21 AM

Station : 3083 - Hallandale Beach Blvd & NE 14 Ave (Standard File)

Hour	Minute	Action	Pattern	Cycle	Offset	Split	Seqnc	Short	Long	Dwell	Split 1	Split 2	Split 3	Split 4	Split 5	Split 6	Split 7	Split 8	Split 9	Split 10	Split 11	Split 12	Split 13	Split 14	Split 15	Split 16
Day Plan 4											Easy															

Scheduler

Plan	Month											Day of Week						Day of Month								1									2									3		Day Plan
	J	F	M	A	M	J	J	A	S	O	N	D	S	M	T	W	T	F	S	1	2	3	4	5	6	7	8	9	0	1	2	3	4	5	6	7	8	9	0	1	2	3	4	5	6	7	8	9	0	1	
1	1	1	1	1	1	1	1	1	1	1	1	1		1	1	1	1	1		1	1	1	1	1	1	1	1	1	1	1	1	1	1	1	1	1	1	1	1	1	1	1	1	1	1	1	1	1	1	1	1
2	1	1	1	1	1	1	1	1	1	1	1	1							1	1	1	1	1	1	1	1	1	1	1	1	1	1	1	1	1	1	1	1	1	1	1	1	1	1	1	1	1	1	1	1	1	2
3	1	1	1	1	1	1	1	1	1	1	1	1	1							1	1	1	1	1	1	1	1	1	1	1	1	1	1	1	1	1	1	1	1	1	1	1	1	1	1	1	1	1	1	1	1	3
4	1													1	1	1	1	1		1																															2
5	1													1							1																															2
6					1									1																														1	1	1	1	1	1	1	1	2
7							1											1				1																														2
8							1							1	1	1	1	1					1																													2
9							1							1										1																													2
10									1					1						1	1	1	1	1	1	1																											2
11										1							1																								1	1	1	1	1	1	1					2
12										1								1																									1	1	1	1	1	1	1				2
13											1			1				1																										1									2
14											1			1	1	1	1	1																											1								2
15											1			1																																1							2
16											1			1				1																																		1	2
17																																																					1
18																																																					1
19																																																					1
20																																																					1
21																																																					1
22																																																					1
23																																																					1
24																																																					1
25																																																					1
26																																																					1
27																																																					1
28																																																					1
29																																																					1
30																																																					1
31																																																					1
32																																																					1

User Comments:

TRAFFIC ENGINEERING DIVISION
SIGNALIZED INTERSECTION

LOCATION **HALLANDALE BEACH BLVD & NE/SE 14 AVENUE**

ORDER NO FDOT ISSUE DATE -- REV NO. 6 COMPL DATE 3/20/07

DWG. NO. 10-01-01-01 FILE NO. 3083 CITY HALLANDALE BEACH SCALE: 1" = 50'

DWN BY: LARRY

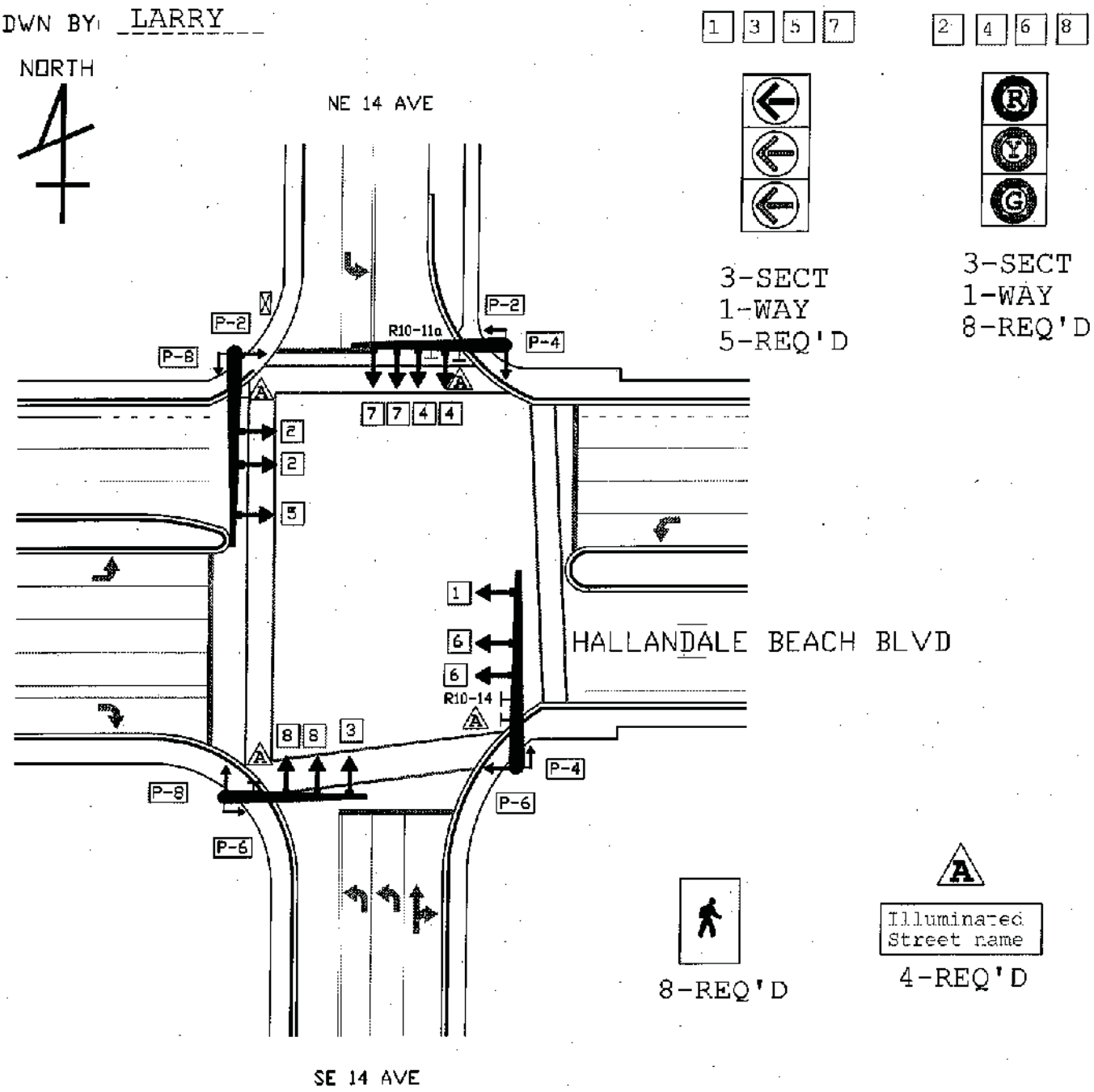

1. VIDEO DETECTION INSTALLED UNDER FDOT PROJ NO 2281691

Sequence of Operation for (3083), Hallandale Beach Blvd and NE 14 Avenue
Hallandale Beach

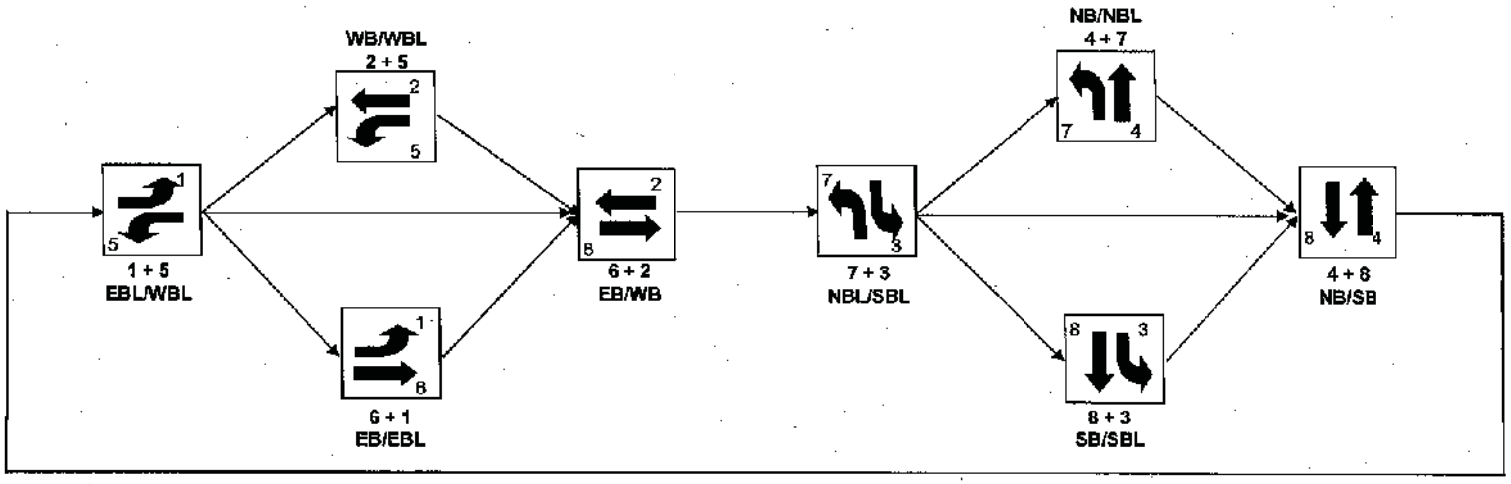

APPENDIX K

SYNCHRO Output

Existing (2015) SYNCHRO Output

Movement	EBL	EBT	EBR	WBL	WBT	WBR	NBL	NBT	NBR	SBL	SBT	SBR
Lane Configurations												
Traffic Volume (veh/h)	0	1228	34	105	1353	0	0	0	0	218	570	38
Future Volume (veh/h)	0	1228	34	105	1353	0	0	0	0	218	570	38
Number	7	4	14	3	8	18				1	6	16
Initial Q (Qb), veh	0	0	0	0	0	0				0	0	0
Ped-Bike Adj(A_pbT)	1.00		1.00	1.00		1.00				1.00		1.00
Parking Bus, Adj	1.00	1.00	1.00	1.00	1.00	1.00				1.00	1.00	1.00
Adj Sat Flow, veh/h/ln	0	1863	1900	1863	1863	0				1900	1863	1900
Adj Flow Rate, veh/h	0	1293	36	111	1424	0				229	600	40
Adj No. of Lanes	0	3	0	1	3	0				0	4	0
Peak Hour Factor	0.95	0.95	0.95	0.95	0.95	0.95				0.95	0.95	0.95
Percent Heavy Veh, %	0	2	2	2	2	0				0	2	0
Cap, veh/h	0	3305	92	133	3878	0				264	767	51
Arrive On Green	0.00	0.65	0.65	0.10	1.00	0.00				0.16	0.16	0.16
Sat Flow, veh/h	0	5254	142	1774	5253	0				1658	4812	320
Grp Volume(v), veh/h	0	862	467	111	1424	0				246	397	226
Grp Sat Flow(s),veh/h/ln	0	1695	1837	1774	1695	0				1780	1602	1806
Q Serve(g_s), s	0.0	19.1	19.1	9.8	0.0	0.0				21.6	19.0	19.2
Cycle Q Clear(g_c), s	0.0	19.1	19.1	9.8	0.0	0.0				21.6	19.0	19.2
Prop In Lane	0.00		0.08	1.00		0.00				0.93		0.18
Lane Grp Cap(c), veh/h	0	2203	1194	133	3878	0				284	511	288
V/C Ratio(X)	0.00	0.39	0.39	0.83	0.37	0.00				0.87	0.78	0.79
Avail Cap(c_a), veh/h	0	2203	1194	455	3878	0				284	511	288
HCM Platoon Ratio	1.00	1.00	1.00	1.33	1.33	1.00				1.00	1.00	1.00
Upstream Filter(I)	0.00	1.00	1.00	0.93	0.93	0.00				1.00	1.00	1.00
Uniform Delay (d), s/veh	0.0	13.2	13.2	71.0	0.0	0.0				65.6	64.5	64.6
Incr Delay (d2), s/veh	0.0	0.5	1.0	11.7	0.3	0.0				28.1	11.1	19.1
Initial Q Delay(d3),s/veh	0.0	0.0	0.0	0.0	0.0	0.0				0.0	0.0	0.0
%ile BackOfQ(95%),veh/ln	0.0	13.9	15.1	8.9	0.2	0.0				18.7	14.2	16.6
LnGrp Delay(d),s/veh	0.0	13.7	14.1	82.8	0.3	0.0				93.7	75.6	83.7
LnGrp LOS		B	B	F	A					F	E	F
Approach Vol, veh/h		1329			1535						869	
Approach Delay, s/veh		13.8			6.2						82.8	
Approach LOS		B			A						F	

Timer	1	2	3	4	5	6	7	8
Assigned Phs			3	4		6		8
Phs Duration (G+Y+Rc), s			18.0	110.0		32.0		128.0
Change Period (Y+Rc), s			6.0	6.0		6.5		6.0
Max Green Setting (Gmax), s			41.0	75.0		25.5		122.0
Max Q Clear Time (g_c+I1), s			11.8	21.1		23.6		2.0
Green Ext Time (p_c), s			0.3	36.4		1.0		55.5

Intersection Summary	
HCM 2010 Ctrl Delay	26.8
HCM 2010 LOS	C

Movement	EBL	EBT	EBR	WBL	WBT	WBR	NBL	NBT	NBR	SBL	SBT	SBR
Lane Configurations												
Traffic Volume (veh/h)	30	1402	0	0	1280	22	174	132	66	0	0	0
Future Volume (veh/h)	30	1402	0	0	1280	22	174	132	66	0	0	0
Number	7	4	14	3	8	18	5	2	12			
Initial Q (Qb), veh	0	0	0	0	0	0	0	0	0			
Ped-Bike Adj(A_pbT)	1.00		1.00	1.00		0.98	1.00		1.00			
Parking Bus, Adj	1.00	1.00	1.00	1.00	1.00	1.00	1.00	1.00	1.00			
Adj Sat Flow, veh/h/ln	1863	1863	0	0	1863	1900	1863	1863	1863			
Adj Flow Rate, veh/h	32	1476	0	0	1347	23	183	139	69			
Adj No. of Lanes	1	2	0	0	4	0	1	1	1			
Peak Hour Factor	0.95	0.95	0.95	0.95	0.95	0.95	0.95	0.95	0.95			
Percent Heavy Veh, %	2	2	0	0	2	2	2	2	2			
Cap, veh/h	42	1648	0	0	2644	45	826	867	735			
Arrive On Green	0.05	0.93	0.00	0.00	0.40	0.40	0.47	0.47	0.47			
Sat Flow, veh/h	1774	3632	0	0	6796	112	1774	1863	1578			
Grp Volume(v), veh/h	32	1476	0	0	990	380	183	139	69			
Grp Sat Flow(s),veh/h/ln	1774	1770	0	0	1602	1841	1774	1863	1578			
Q Serve(g_s), s	2.9	27.6	0.0	0.0	24.7	24.8	9.8	6.9	3.9			
Cycle Q Clear(g_c), s	2.9	27.6	0.0	0.0	24.7	24.8	9.8	6.9	3.9			
Prop In Lane	1.00		0.00	0.00		0.06	1.00		1.00			
Lane Grp Cap(c), veh/h	42	1648	0	0	1944	745	826	867	735			
V/C Ratio(X)	0.76	0.90	0.00	0.00	0.51	0.51	0.22	0.16	0.09			
Avail Cap(c_a), veh/h	510	2743	0	0	2163	828	826	867	735			
HCM Platoon Ratio	2.00	2.00	1.00	1.00	1.00	1.00	1.00	1.00	1.00			
Upstream Filter(I)	0.91	0.91	0.00	0.00	1.00	1.00	1.00	1.00	1.00			
Uniform Delay (d), s/veh	75.8	3.9	0.0	0.0	35.7	35.7	25.5	24.7	23.9			
Incr Delay (d2), s/veh	22.2	2.2	0.0	0.0	0.2	0.5	0.6	0.4	0.3			
Initial Q Delay(d3),s/veh	0.0	0.0	0.0	0.0	0.0	0.0	0.0	0.0	0.0			
%ile BackOfQ(95%),veh/ln	3.0	17.4	0.0	0.0	16.4	18.5	8.6	6.6	3.2			
LnGrp Delay(d),s/veh	98.0	6.1	0.0	0.0	35.9	36.3	26.1	25.1	24.2			
LnGrp LOS	F	A			D	D	C	C	C			
Approach Vol, veh/h		1508			1370			391				
Approach Delay, s/veh		8.1			36.0			25.4				
Approach LOS		A			D			C				

Timer	1	2	3	4	5	6	7	8
Assigned Phs		2		4			7	8
Phs Duration (G+Y+Rc), s		76.1		83.9			9.8	74.1
Change Period (Y+Rc), s		6.0		5.0			6.0	5.0
Max Green Setting (Gmax), s		25.0		124.0			46.0	72.0
Max Q Clear Time (g_c+I1), s		11.8		29.6			4.9	26.8
Green Ext Time (p_c), s		1.3		53.7			0.1	34.1

Intersection Summary	
HCM 2010 Ctrl Delay	21.9
HCM 2010 LOS	C

Movement	EBL	EBT	EBR	WBL	WBT	WBR	NBL	NBT	NBR	SBL	SBT	SBR
Lane Configurations												
Traffic Volume (veh/h)	174	886	285	543	924	87	291	645	318	435	980	42
Future Volume (veh/h)	174	886	285	543	924	87	291	645	318	435	980	42
Number	7	4	14	3	8	18	5	2	12	1	6	16
Initial Q (Qb), veh	0	0	0	0	0	0	0	0	0	0	0	0
Ped-Bike Adj(A_pbT)	1.00		0.99	1.00		0.99	1.00		0.99	1.00		1.00
Parking Bus, Adj	1.00	1.00	1.00	1.00	1.00	1.00	1.00	1.00	1.00	1.00	1.00	1.00
Adj Sat Flow, veh/h/ln	1863	1863	1900	1863	1863	1900	1863	1863	1863	1863	1863	1900
Adj Flow Rate, veh/h	183	933	300	572	973	92	306	679	335	458	1032	44
Adj No. of Lanes	1	3	0	2	3	0	2	3	1	2	3	0
Peak Hour Factor	0.95	0.95	0.95	0.95	0.95	0.95	0.95	0.95	0.95	0.95	0.95	0.95
Percent Heavy Veh, %	2	2	2	2	2	2	2	2	2	2	2	2
Cap, veh/h	204	998	320	570	1478	139	355	1351	417	452	1470	63
Arrive On Green	0.12	0.26	0.26	0.05	0.10	0.10	0.10	0.27	0.27	0.13	0.29	0.29
Sat Flow, veh/h	1774	3803	1220	3442	4723	446	3442	5085	1571	3442	5002	213
Grp Volume(v), veh/h	183	831	402	572	698	367	306	679	335	458	699	377
Grp Sat Flow(s),veh/h/ln	1774	1695	1633	1721	1695	1779	1721	1695	1571	1721	1695	1824
Q Serve(g_s), s	16.3	38.3	38.5	26.5	31.7	31.8	14.0	18.1	31.8	21.0	29.4	29.4
Cycle Q Clear(g_c), s	16.3	38.3	38.5	26.5	31.7	31.8	14.0	18.1	31.8	21.0	29.4	29.4
Prop In Lane	1.00		0.75	1.00		0.25	1.00		1.00	1.00		0.12
Lane Grp Cap(c), veh/h	204	890	428	570	1061	556	355	1351	417	452	996	536
V/C Ratio(X)	0.90	0.93	0.94	1.00	0.66	0.66	0.86	0.50	0.80	1.01	0.70	0.70
Avail Cap(c_a), veh/h	238	922	444	570	1061	556	452	1351	417	452	996	536
HCM Platoon Ratio	1.00	1.00	1.00	0.33	0.33	0.33	1.00	1.00	1.00	1.00	1.00	1.00
Upstream Filter(I)	1.00	1.00	1.00	0.84	0.84	0.84	1.00	1.00	1.00	1.00	1.00	1.00
Uniform Delay (d), s/veh	69.8	57.7	57.7	75.6	63.5	63.6	70.6	49.8	54.8	69.5	50.2	50.3
Incr Delay (d2), s/veh	29.5	15.9	27.2	35.5	1.3	2.4	13.0	1.3	15.0	45.9	4.1	7.5
Initial Q Delay(d3),s/veh	0.0	0.0	0.0	0.0	0.0	0.0	0.0	0.0	0.0	0.0	0.0	0.0
%ile BackOfQ(95%),veh/ln	14.8	27.3	28.1	27.8	20.9	22.1	11.7	13.5	22.0	23.1	20.6	22.5
LnGrp Delay(d),s/veh	99.4	73.6	85.0	111.1	64.8	66.0	83.6	51.1	69.8	115.4	54.4	57.8
LnGrp LOS	F	E	F	F	E	E	F	D	E	F	D	E
Approach Vol, veh/h		1416			1637			1320			1534	
Approach Delay, s/veh		80.1			81.2			63.4			73.4	
Approach LOS		F			F			E			E	

Timer	1	2	3	4	5	6	7	8
Assigned Phs	1	2	3	4	5	6	7	8
Phs Duration (G+Y+Rc), s	28.0	50.5	33.0	48.5	23.5	55.0	24.9	56.6
Change Period (Y+Rc), s	7.0	8.0	6.5	6.5	7.0	8.0	6.5	6.5
Max Green Setting (Gmax), s	21.0	41.0	26.5	43.5	21.0	41.0	21.5	48.5
Max Q Clear Time (g_c+I1), s	23.0	33.8	28.5	40.5	16.0	31.4	18.3	33.8
Green Ext Time (p_c), s	0.0	5.8	0.0	1.5	0.5	7.5	0.1	11.8

Intersection Summary	
HCM 2010 Ctrl Delay	75.0
HCM 2010 LOS	E

Movement	EBL	EBT	EBR	WBL	WBT	WBR	NBL	NBT	NBR	SBL	SBT	SBR
Lane Configurations												
Traffic Volume (veh/h)	0	1596	20	19	1336	0	12	0	24	161	0	174
Future Volume (veh/h)	0	1596	20	19	1336	0	12	0	24	161	0	174
Number	1	6	16	5	2	12	7	4	14	3	8	18
Initial Q (Qb), veh	0	0	0	0	0	0	0	0	0	0	0	0
Ped-Bike Adj(A_pbT)	1.00		0.98	1.00		1.00	1.00		1.00	1.00		1.00
Parking Bus, Adj	1.00	1.00	1.00	1.00	1.00	1.00	1.00	1.00	1.00	1.00	1.00	1.00
Adj Sat Flow, veh/h/ln	0	1863	1863	1863	1863	0	1900	1863	1900	1863	1863	1900
Adj Flow Rate, veh/h	0	1735	22	21	1452	0	13	0	26	175	0	189
Adj No. of Lanes	0	3	1	1	3	0	0	1	0	1	1	0
Peak Hour Factor	0.92	0.92	0.92	0.92	0.92	0.92	0.92	0.92	0.92	0.92	0.92	0.92
Percent Heavy Veh, %	0	2	2	2	2	0	2	2	2	2	2	2
Cap, veh/h	0	2529	772	150	2797	0	65	0	130	388	0	346
Arrive On Green	0.00	0.66	0.66	0.02	0.55	0.00	0.12	0.00	0.12	0.22	0.00	0.22
Sat Flow, veh/h	0	5253	1551	1774	5253	0	547	0	1095	1774	0	1583
Grp Volume(v), veh/h	0	1735	22	21	1452	0	39	0	0	175	0	189
Grp Sat Flow(s),veh/h/ln	0	1695	1551	1774	1695	0	1642	0	0	1774	0	1583
Q Serve(g_s), s	0.0	33.8	0.8	0.9	28.8	0.0	3.4	0.0	0.0	13.7	0.0	16.9
Cycle Q Clear(g_c), s	0.0	33.8	0.8	0.9	28.8	0.0	3.4	0.0	0.0	13.7	0.0	16.9
Prop In Lane	0.00		1.00	1.00		0.00	0.33		0.67	1.00		1.00
Lane Grp Cap(c), veh/h	0	2529	772	150	2797	0	195	0	0	388	0	346
V/C Ratio(X)	0.00	0.69	0.03	0.14	0.52	0.00	0.20	0.00	0.00	0.45	0.00	0.55
Avail Cap(c_a), veh/h	0	2529	772	256	2797	0	195	0	0	388	0	346
HCM Platoon Ratio	1.00	1.33	1.33	1.00	1.00	1.00	1.00	1.00	1.00	1.00	1.00	1.00
Upstream Filter(I)	0.00	0.37	0.37	1.00	1.00	0.00	1.00	0.00	0.00	1.00	0.00	1.00
Uniform Delay (d), s/veh	0.0	19.3	13.7	22.6	22.7	0.0	63.6	0.0	0.0	54.2	0.0	55.4
Incr Delay (d2), s/veh	0.0	0.6	0.0	0.4	0.7	0.0	2.3	0.0	0.0	3.8	0.0	6.1
Initial Q Delay(d3),s/veh	0.0	0.0	0.0	0.0	0.0	0.0	0.0	0.0	0.0	0.0	0.0	0.0
%ile BackOfQ(95%),veh/ln	0.0	19.7	0.6	0.8	19.7	0.0	3.0	0.0	0.0	11.5	0.0	12.6
LnGrp Delay(d),s/veh	0.0	19.9	13.8	23.0	23.4	0.0	65.9	0.0	0.0	57.9	0.0	61.5
LnGrp LOS		B	B	C	C		E			E		E
Approach Vol, veh/h		1757			1473			39			364	
Approach Delay, s/veh		19.8			23.4			65.9			59.8	
Approach LOS		B			C			E			E	

Timer	1	2	3	4	5	6	7	8
Assigned Phs		2		4	5	6		8
Phs Duration (G+Y+Rc), s		94.0		25.0	8.4	85.6		41.0
Change Period (Y+Rc), s		6.0		6.0	6.0	6.0		6.0
Max Green Setting (Gmax), s		88.0		19.0	12.0	70.0		35.0
Max Q Clear Time (g_c+I1), s		30.8		5.4	2.9	35.8		18.9
Green Ext Time (p_c), s		47.0		0.1	0.0	30.2		1.5

Intersection Summary	
HCM 2010 Ctrl Delay	25.8
HCM 2010 LOS	C

Notes

User approved pedestrian interval to be less than phase max green.

Movement	EBL	EBT	EBR	WBL	WBT	WBR	NBL	NBT	NBR	SBL	SBT	SBR
Lane Configurations												
Traffic Volume (veh/h)	78	1589	44	104	1296	55	34	16	102	0	0	0
Future Volume (veh/h)	78	1589	44	104	1296	55	34	16	102	0	0	0
Number	7	4	14	3	8	18	5	2	12			
Initial Q (Qb), veh	0	0	0	0	0	0	0	0	0			
Ped-Bike Adj(A_pbT)	1.00		0.99	1.00		0.99	1.00		1.00			
Parking Bus, Adj	1.00	1.00	1.00	1.00	1.00	1.00	1.00	1.00	1.00			
Adj Sat Flow, veh/h/ln	1863	1863	1863	1863	1863	1863	1863	1863	1863			
Adj Flow Rate, veh/h	82	1673	46	109	1364	58	26	30	107			
Adj No. of Lanes	1	3	1	2	3	1	1	1	1			
Peak Hour Factor	0.95	0.95	0.95	0.95	0.95	0.95	0.95	0.95	0.95			
Percent Heavy Veh, %	2	2	2	2	2	2	2	2	2			
Cap, veh/h	102	3015	928	153	2949	910	444	466	395			
Arrive On Green	0.06	0.59	0.59	0.04	0.58	0.58	0.25	0.25	0.25			
Sat Flow, veh/h	1774	5085	1565	3442	5085	1568	1774	1863	1581			
Grp Volume(v), veh/h	82	1673	46	109	1364	58	26	30	107			
Grp Sat Flow(s),veh/h/ln	1774	1695	1565	1721	1695	1568	1774	1863	1581			
Q Serve(g_s), s	7.3	31.9	2.0	5.0	24.6	2.6	1.8	2.0	8.7			
Cycle Q Clear(g_c), s	7.3	31.9	2.0	5.0	24.6	2.6	1.8	2.0	8.7			
Prop In Lane	1.00		1.00	1.00		1.00	1.00		1.00			
Lane Grp Cap(c), veh/h	102	3015	928	153	2949	910	444	466	395			
V/C Ratio(X)	0.80	0.55	0.05	0.71	0.46	0.06	0.06	0.06	0.27			
Avail Cap(c_a), veh/h	266	3015	928	344	2949	910	444	466	395			
HCM Platoon Ratio	1.00	1.00	1.00	1.00	1.00	1.00	1.00	1.00	1.00			
Upstream Filter(I)	1.00	1.00	1.00	1.00	1.00	1.00	1.00	1.00	1.00			
Uniform Delay (d), s/veh	74.5	19.8	13.7	75.4	19.3	14.7	45.7	45.7	48.3			
Incr Delay (d2), s/veh	13.5	0.7	0.1	6.0	0.5	0.1	0.3	0.3	1.7			
Initial Q Delay(d3),s/veh	0.0	0.0	0.0	0.0	0.0	0.0	0.0	0.0	0.0			
%ile BackOfQ(95%),veh/ln	7.2	21.4	1.6	4.5	17.2	2.1	1.6	1.9	7.2			
LnGrp Delay(d),s/veh	88.0	20.5	13.8	81.4	19.8	14.8	45.9	46.0	49.9			
LnGrp LOS	F	C	B	F	B	B	D	D	D			
Approach Vol, veh/h		1801			1531			163				
Approach Delay, s/veh		23.4			24.0			48.6				
Approach LOS		C			C			D				

Timer	1	2	3	4	5	6	7	8
Assigned Phs		2	3	4			7	8
Phs Duration (G+Y+Rc), s		46.0	13.1	100.9			15.2	98.8
Change Period (Y+Rc), s		6.0	6.0	6.0			6.0	6.0
Max Green Setting (Gmax), s		40.0	16.0	86.0			24.0	78.0
Max Q Clear Time (g_c+I1), s		10.7	7.0	33.9			9.3	26.6
Green Ext Time (p_c), s		0.6	0.2	42.3			0.1	41.8

Intersection Summary	
HCM 2010 Ctrl Delay	24.8
HCM 2010 LOS	C

Notes

User approved volume balancing among the lanes for turning movement.

Movement	EBL	EBT	EBR	WBL	WBT	WBR	NBL	NBT	NBR	SBL	SBT	SBR
Lane Configurations												
Traffic Volume (veh/h)	82	1166	205	42	1208	30	225	45	23	79	70	129
Future Volume (veh/h)	82	1166	205	42	1208	30	225	45	23	79	70	129
Number	7	4	14	3	8	18	5	2	12	1	6	16
Initial Q (Qb), veh	0	0	0	0	0	0	0	0	0	0	0	0
Ped-Bike Adj(A_pbT)	1.00		0.98	1.00		0.95	1.00		0.99	1.00		0.99
Parking Bus, Adj	1.00	1.00	1.00	1.00	1.00	1.00	1.00	1.00	1.00	1.00	1.00	1.00
Adj Sat Flow, veh/h/ln	1863	1863	1863	1863	1863	1900	1863	1863	1900	1863	1863	1900
Adj Flow Rate, veh/h	89	1267	223	46	1313	33	245	49	25	86	76	140
Adj No. of Lanes	1	3	1	1	3	0	2	1	0	1	1	0
Peak Hour Factor	0.92	0.92	0.92	0.92	0.92	0.92	0.92	0.92	0.92	0.92	0.92	0.92
Percent Heavy Veh, %	2	2	2	2	2	2	2	2	2	2	2	2
Cap, veh/h	109	1815	556	59	1677	42	292	464	237	106	219	404
Arrive On Green	0.06	0.36	0.36	0.03	0.33	0.33	0.08	0.40	0.40	0.06	0.37	0.37
Sat Flow, veh/h	1774	5085	1559	1774	5095	128	3442	1160	592	1774	585	1077
Grp Volume(v), veh/h	89	1267	223	46	874	472	245	0	74	86	0	216
Grp Sat Flow(s),veh/h/ln	1774	1695	1559	1774	1695	1833	1721	0	1752	1774	0	1661
Q Serve(g_s), s	7.9	34.1	17.2	4.1	37.3	37.3	11.2	0.0	4.2	7.7	0.0	14.9
Cycle Q Clear(g_c), s	7.9	34.1	17.2	4.1	37.3	37.3	11.2	0.0	4.2	7.7	0.0	14.9
Prop In Lane	1.00		1.00	1.00		0.07	1.00		0.34	1.00		0.65
Lane Grp Cap(c), veh/h	109	1815	556	59	1116	603	292	0	701	106	0	623
V/C Ratio(X)	0.82	0.70	0.40	0.77	0.78	0.78	0.84	0.00	0.11	0.81	0.00	0.35
Avail Cap(c_a), veh/h	144	1815	556	144	1187	642	387	0	701	200	0	623
HCM Platoon Ratio	1.00	1.00	1.00	1.00	1.00	1.00	1.00	1.00	1.00	1.00	1.00	1.00
Upstream Filter(I)	1.00	1.00	1.00	1.00	1.00	1.00	1.00	0.00	1.00	1.00	0.00	1.00
Uniform Delay (d), s/veh	74.2	44.1	38.6	76.7	48.5	48.5	72.1	0.0	30.1	74.3	0.0	35.9
Incr Delay (d2), s/veh	23.4	1.2	0.5	19.0	3.3	5.9	11.7	0.0	0.3	13.7	0.0	1.5
Initial Q Delay(d3),s/veh	0.0	0.0	0.0	0.0	0.0	0.0	0.0	0.0	0.0	0.0	0.0	0.0
%ile BackOfQ(95%),veh/ln	8.1	22.7	12.0	4.2	24.9	27.2	9.8	0.0	3.8	7.5	0.0	11.5
LnGrp Delay(d),s/veh	97.7	45.3	39.1	95.7	51.8	54.4	83.9	0.0	30.4	88.0	0.0	37.5
LnGrp LOS	F	D	D	F	D	D	F		C	F		D
Approach Vol, veh/h		1579			1392			319			302	
Approach Delay, s/veh		47.3			54.1			71.5			51.9	
Approach LOS		D			D			E			D	

Timer	1	2	3	4	5	6	7	8
Assigned Phs	1	2	3	4	5	6	7	8
Phs Duration (G+Y+Rc), s	15.6	70.0	11.4	63.1	19.6	66.0	15.8	58.7
Change Period (Y+Rc), s	6.0	6.0	6.0	6.0	6.0	6.0	6.0	6.0
Max Green Setting (Gmax), s	18.0	49.0	13.0	56.0	18.0	49.0	13.0	56.0
Max Q Clear Time (g_c+I1), s	9.7	6.2	6.1	36.1	13.2	16.9	9.9	39.3
Green Ext Time (p_c), s	0.1	2.0	0.0	17.0	0.3	1.9	0.0	13.4

Intersection Summary	
HCM 2010 Ctrl Delay	52.5
HCM 2010 LOS	D

Movement	EBL	EBT	EBR	WBL	WBT	WBR	NBL	NBT	NBR	SBL	SBT	SBR
Lane Configurations												
Traffic Volume (veh/h)	71	67	63	43	48	14	50	900	5	25	1263	40
Future Volume (veh/h)	71	67	63	43	48	14	50	900	5	25	1263	40
Number	7	4	14	3	8	18	5	2	12	1	6	16
Initial Q (Qb), veh	0	0	0	0	0	0	0	0	0	0	0	0
Ped-Bike Adj(A_pbT)	0.99		0.98	0.99		0.98	1.00		0.99	1.00		0.99
Parking Bus, Adj	1.00	1.00	1.00	1.00	1.00	1.00	1.00	1.00	1.00	1.00	1.00	1.00
Adj Sat Flow, veh/h/ln	1863	1863	1900	1863	1863	1900	1863	1863	1900	1863	1863	1900
Adj Flow Rate, veh/h	76	72	68	46	52	15	54	968	5	27	1358	43
Adj No. of Lanes	1	1	0	1	1	0	1	2	0	1	2	0
Peak Hour Factor	0.93	0.93	0.93	0.93	0.93	0.93	0.93	0.93	0.93	0.93	0.93	0.93
Percent Heavy Veh, %	2	2	2	2	2	2	2	2	2	2	2	2
Cap, veh/h	185	123	116	123	195	56	293	2832	15	451	2746	87
Arrive On Green	0.14	0.14	0.14	0.14	0.14	0.14	0.78	0.78	0.78	0.78	0.78	0.78
Sat Flow, veh/h	1311	872	824	1228	1385	399	383	3610	19	575	3501	111
Grp Volume(v), veh/h	76	0	140	46	0	67	54	474	499	27	686	715
Grp Sat Flow(s),veh/h/ln	1311	0	1696	1228	0	1784	383	1770	1859	575	1770	1842
Q Serve(g_s), s	8.8	0.0	12.4	5.8	0.0	5.4	9.2	12.6	12.6	2.3	21.8	21.9
Cycle Q Clear(g_c), s	14.2	0.0	12.4	18.2	0.0	5.4	31.1	12.6	12.6	15.0	21.8	21.9
Prop In Lane	1.00		0.49	1.00		0.22	1.00		0.01	1.00		0.06
Lane Grp Cap(c), veh/h	185	0	239	123	0	251	293	1388	1458	451	1388	1445
V/C Ratio(X)	0.41	0.00	0.59	0.37	0.00	0.27	0.18	0.34	0.34	0.06	0.49	0.50
Avail Cap(c_a), veh/h	239	0	307	173	0	323	293	1388	1458	451	1388	1445
HCM Platoon Ratio	1.00	1.00	1.00	1.00	1.00	1.00	1.00	1.00	1.00	1.00	1.00	1.00
Upstream Filter(I)	1.00	0.00	1.00	1.00	0.00	1.00	1.00	1.00	1.00	1.00	1.00	1.00
Uniform Delay (d), s/veh	67.7	0.0	64.4	72.9	0.0	61.4	11.6	5.1	5.1	7.3	6.1	6.1
Incr Delay (d2), s/veh	1.5	0.0	2.3	1.9	0.0	0.6	1.4	0.7	0.6	0.3	1.3	1.2
Initial Q Delay(d3),s/veh	0.0	0.0	0.0	0.0	0.0	0.0	0.0	0.0	0.0	0.0	0.0	0.0
%ile BackOfQ(95%),veh/ln	5.9	0.0	9.9	3.7	0.0	4.8	2.0	10.4	10.9	0.7	16.4	17.0
LnGrp Delay(d),s/veh	69.2	0.0	66.7	74.8	0.0	62.0	13.0	5.8	5.7	7.5	7.3	7.3
LnGrp LOS	E		E	E		E	B	A	A	A	A	A
Approach Vol, veh/h		216			113			1027			1428	
Approach Delay, s/veh		67.6			67.2			6.1			7.3	
Approach LOS		E			E			A			A	

Timer	1	2	3	4	5	6	7	8
Assigned Phs		2		4		6		8
Phs Duration (G+Y+Rc), s		131.5		28.5		131.5		28.5
Change Period (Y+Rc), s		6.0		6.0		6.0		6.0
Max Green Setting (Gmax), s		119.0		29.0		119.0		29.0
Max Q Clear Time (g_c+I1), s		33.1		16.2		23.9		20.2
Green Ext Time (p_c), s		39.5		1.3		41.0		1.0

Intersection Summary	
HCM 2010 Ctrl Delay	14.0
HCM 2010 LOS	B

Movement	EBL	EBT	EBR	WBL	WBT	WBR	NBL	NBT	NBR	SBL	SBT	SBR
Lane Configurations												
Traffic Volume (veh/h)	142	102	396	23	8	9	64	1124	16	41	1699	6
Future Volume (veh/h)	142	102	396	23	8	9	64	1124	16	41	1699	6
Number	7	4	14	3	8	18	5	2	12	1	6	16
Initial Q (Qb), veh	0	0	0	0	0	0	0	0	0	0	0	0
Ped-Bike Adj(A_pbT)	1.00		1.00	1.00		0.98	1.00		1.00	1.00		0.99
Parking Bus, Adj	1.00	1.00	1.00	1.00	1.00	1.00	1.00	1.00	1.00	1.00	1.00	1.00
Adj Sat Flow, veh/h/ln	1863	1863	1900	1863	1863	1863	1863	1863	1863	1863	1863	1900
Adj Flow Rate, veh/h	156	112	435	25	9	10	70	1235	18	45	1867	7
Adj No. of Lanes	1	1	0	1	1	2	1	3	1	2	3	0
Peak Hour Factor	0.91	0.91	0.91	0.91	0.91	0.91	0.91	0.91	0.91	0.91	0.91	0.91
Percent Heavy Veh, %	2	2	2	2	2	2	2	2	2	2	2	2
Cap, veh/h	455	85	332	80	84	123	87	2590	803	93	2547	10
Arrive On Green	0.26	0.26	0.26	0.04	0.04	0.04	0.05	0.51	0.51	0.03	0.49	0.49
Sat Flow, veh/h	1774	333	1294	1774	1863	2731	1774	5085	1577	3442	5230	20
Grp Volume(v), veh/h	156	0	547	25	9	10	70	1235	18	45	1210	664
Grp Sat Flow(s),veh/h/ln	1774	0	1627	1774	1863	1365	1774	1695	1577	1721	1695	1859
Q Serve(g_s), s	11.5	0.0	41.0	2.2	0.7	0.6	6.2	25.2	0.9	2.1	45.6	45.6
Cycle Q Clear(g_c), s	11.5	0.0	41.0	2.2	0.7	0.6	6.2	25.2	0.9	2.1	45.6	45.6
Prop In Lane	1.00		0.80	1.00		1.00	1.00		1.00	1.00		0.01
Lane Grp Cap(c), veh/h	455	0	417	80	84	123	87	2590	803	93	1651	906
V/C Ratio(X)	0.34	0.00	1.31	0.31	0.11	0.08	0.80	0.48	0.02	0.48	0.73	0.73
Avail Cap(c_a), veh/h	455	0	417	421	442	649	100	2590	803	194	1651	906
HCM Platoon Ratio	1.00	1.00	1.00	1.00	1.00	1.00	1.00	1.00	1.00	1.00	1.00	1.00
Upstream Filter(I)	1.00	0.00	1.00	1.00	1.00	1.00	1.00	1.00	1.00	1.00	1.00	1.00
Uniform Delay (d), s/veh	48.5	0.0	59.5	74.0	73.3	73.3	75.3	25.4	19.5	76.7	32.7	32.7
Incr Delay (d2), s/veh	0.4	0.0	156.6	2.2	0.6	0.3	32.3	0.6	0.1	3.9	2.9	5.2
Initial Q Delay(d3),s/veh	0.0	0.0	0.0	0.0	0.0	0.0	0.0	0.0	0.0	0.0	0.0	0.0
%ile BackOfQ(95%),veh/ln	9.6	0.0	65.8	2.0	0.7	0.4	6.9	17.6	0.7	1.9	29.7	32.9
LnGrp Delay(d),s/veh	49.0	0.0	216.1	76.2	73.9	73.5	107.5	26.1	19.5	80.6	35.7	38.0
LnGrp LOS	D		F	E	E	E	F	C	B	F	D	D
Approach Vol, veh/h		703			44			1323			1919	
Approach Delay, s/veh		179.0			75.1			30.3			37.5	
Approach LOS		F			E			C			D	

Timer	1	2	3	4	5	6	7	8
Assigned Phs	1	2		4	5	6		8
Phs Duration (G+Y+Rc), s	11.3	88.5		47.0	14.9	84.9		13.2
Change Period (Y+Rc), s	7.0	7.0		6.0	7.0	7.0		6.0
Max Green Setting (Gmax), s	9.0	46.0		41.0	9.0	46.0		38.0
Max Q Clear Time (g_c+I1), s	4.1	27.2		43.0	8.2	47.6		4.2
Green Ext Time (p_c), s	0.0	17.2		0.0	0.0	0.0		0.1

Intersection Summary	
HCM 2010 Ctrl Delay	60.5
HCM 2010 LOS	E

Movement	EBL	EBT	EBR	WBL	WBT	WBR	NBL	NBT	NBR	SBL	SBT	SBR
Lane Configurations												
Traffic Volume (veh/h)	0	1028	49	89	1832	0	0	0	0	151	292	73
Future Volume (veh/h)	0	1028	49	89	1832	0	0	0	0	151	292	73
Number	7	4	14	3	8	18				1	6	16
Initial Q (Qb), veh	0	0	0	0	0	0				0	0	0
Ped-Bike Adj(A_pbT)	1.00		1.00	1.00		1.00				1.00		1.00
Parking Bus, Adj	1.00	1.00	1.00	1.00	1.00	1.00				1.00	1.00	1.00
Adj Sat Flow, veh/h/ln	0	1863	1900	1863	1863	0				1900	1863	1900
Adj Flow Rate, veh/h	0	1117	53	97	1991	0				164	317	79
Adj No. of Lanes	0	3	0	1	3	0				0	4	0
Peak Hour Factor	0.92	0.92	0.92	0.92	0.92	0.92				0.92	0.92	0.92
Percent Heavy Veh, %	0	2	2	2	2	0				0	2	0
Cap, veh/h	0	1995	95	118	2536	0				762	1697	407
Arrive On Green	0.00	0.40	0.40	0.13	1.00	0.00				0.43	0.43	0.43
Sat Flow, veh/h	0	5142	236	1774	5253	0				1774	3951	948
Grp Volume(v), veh/h	0	761	409	97	1991	0				164	255	141
Grp Sat Flow(s),veh/h/ln	0	1695	1820	1774	1695	0				1774	1602	1695
Q Serve(g_s), s	0.0	27.7	27.8	8.5	0.8	0.0				9.3	7.9	8.3
Cycle Q Clear(g_c), s	0.0	27.7	27.8	8.5	0.8	0.0				9.3	7.9	8.3
Prop In Lane	0.00		0.13	1.00		0.00				1.00		0.56
Lane Grp Cap(c), veh/h	0	1359	730	118	2536	0				762	1376	728
V/C Ratio(X)	0.00	0.56	0.56	0.82	0.79	0.00				0.22	0.19	0.19
Avail Cap(c_a), veh/h	0	1377	739	521	3719	0				762	1376	728
HCM Platoon Ratio	1.00	1.00	1.00	2.00	2.00	1.00				1.00	1.00	1.00
Upstream Filter(I)	0.00	1.00	1.00	0.70	0.70	0.00				1.00	1.00	1.00
Uniform Delay (d), s/veh	0.0	37.0	37.0	68.5	0.1	0.0				28.7	28.3	28.4
Incr Delay (d2), s/veh	0.0	0.5	0.9	9.6	0.5	0.0				0.6	0.3	0.6
Initial Q Delay(d3),s/veh	0.0	0.0	0.0	0.0	0.0	0.0				0.0	0.0	0.0
%ile BackOfQ(95%),veh/ln	0.0	19.0	20.3	7.4	0.3	0.0				8.2	6.4	7.2
LnGrp Delay(d),s/veh	0.0	37.5	38.0	78.0	0.6	0.0				29.3	28.6	29.0
LnGrp LOS		D	D	E	A					C	C	C
Approach Vol, veh/h		1170			2088						560	
Approach Delay, s/veh		37.7			4.2						28.9	
Approach LOS		D			A						C	

Timer	1	2	3	4	5	6	7	8
Assigned Phs			3	4		6		8
Phs Duration (G+Y+Rc), s			15.6	69.2		75.2		84.8
Change Period (Y+Rc), s			5.0	5.0		6.5		5.0
Max Green Setting (Gmax), s			47.0	65.0		31.5		117.0
Max Q Clear Time (g_c+I1), s			10.5	29.8		11.3		2.8
Green Ext Time (p_c), s			0.3	30.7		3.5		77.0

Intersection Summary	
HCM 2010 Ctrl Delay	18.1
HCM 2010 LOS	B

Movement	EBL	EBT	EBR	WBL	WBT	WBR	NBL	NBT	NBR	SBL	SBT	SBR
Lane Configurations												
Traffic Volume (veh/h)	46	1121	0	0	1608	35	310	329	93	0	0	0
Future Volume (veh/h)	46	1121	0	0	1608	35	310	329	93	0	0	0
Number	7	4	14	3	8	18	5	2	12			
Initial Q (Qb), veh	0	0	0	0	0	0	0	0	0			
Ped-Bike Adj(A_pbT)	1.00		1.00	1.00		0.98	1.00		1.00			
Parking Bus, Adj	1.00	1.00	1.00	1.00	1.00	1.00	1.00	1.00	1.00			
Adj Sat Flow, veh/h/ln	1863	1863	0	0	1863	1900	1863	1863	1863			
Adj Flow Rate, veh/h	50	1218	0	0	1748	38	337	358	101			
Adj No. of Lanes	1	2	0	0	4	0	1	1	1			
Peak Hour Factor	0.92	0.92	0.92	0.92	0.92	0.92	0.92	0.92	0.92			
Percent Heavy Veh, %	2	2	0	0	2	2	2	2	2			
Cap, veh/h	65	1647	0	0	2584	56	827	868	735			
Arrive On Green	0.07	0.93	0.00	0.00	0.40	0.40	0.47	0.47	0.47			
Sat Flow, veh/h	1774	3632	0	0	6760	141	1774	1863	1578			
Grp Volume(v), veh/h	50	1218	0	0	1292	494	337	358	101			
Grp Sat Flow(s),veh/h/ln	1774	1770	0	0	1602	1835	1774	1863	1578			
Q Serve(g_s), s	4.4	12.3	0.0	0.0	35.5	35.5	20.0	20.3	5.8			
Cycle Q Clear(g_c), s	4.4	12.3	0.0	0.0	35.5	35.5	20.0	20.3	5.8			
Prop In Lane	1.00		0.00	0.00		0.08	1.00		1.00			
Lane Grp Cap(c), veh/h	65	1647	0	0	1910	729	827	868	735			
V/C Ratio(X)	0.77	0.74	0.00	0.00	0.68	0.68	0.41	0.41	0.14			
Avail Cap(c_a), veh/h	588	2610	0	0	1910	729	827	868	735			
HCM Platoon Ratio	2.00	2.00	1.00	1.00	1.00	1.00	1.00	1.00	1.00			
Upstream Filter(I)	0.87	0.87	0.00	0.00	1.00	1.00	1.00	1.00	1.00			
Uniform Delay (d), s/veh	73.5	3.4	0.0	0.0	39.7	39.7	28.2	28.2	24.4			
Incr Delay (d2), s/veh	15.4	0.6	0.0	0.0	1.0	2.5	1.5	1.4	0.4			
Initial Q Delay(d3),s/veh	0.0	0.0	0.0	0.0	0.0	0.0	0.0	0.0	0.0			
%ile BackOfQ(95%),veh/ln	4.4	8.7	0.0	0.0	22.4	25.5	15.4	16.2	4.7			
LnGrp Delay(d),s/veh	88.9	4.0	0.0	0.0	40.7	42.2	29.7	29.7	24.8			
LnGrp LOS	F	A			D	D	C	C	C			
Approach Vol, veh/h		1268			1786			796				
Approach Delay, s/veh		7.3			41.1			29.1				
Approach LOS		A			D			C				

Timer	1	2	3	4	5	6	7	8
Assigned Phs		2		4			7	8
Phs Duration (G+Y+Rc), s		80.6		79.4			10.8	68.6
Change Period (Y+Rc), s		6.0		5.0			5.0	5.0
Max Green Setting (Gmax), s		31.0		118.0			53.0	60.0
Max Q Clear Time (g_c+I1), s		22.3		14.3			6.4	37.5
Green Ext Time (p_c), s		2.5		60.2			0.1	20.0

Intersection Summary	
HCM 2010 Ctrl Delay	27.5
HCM 2010 LOS	C

Movement	EBL	EBT	EBR	WBL	WBT	WBR	NBL	NBT	NBR	SBL	SBT	SBR
Lane Configurations												
Traffic Volume (veh/h)	169	898	245	562	1021	160	514	936	323	361	1028	73
Future Volume (veh/h)	169	898	245	562	1021	160	514	936	323	361	1028	73
Number	7	4	14	3	8	18	5	2	12	1	6	16
Initial Q (Qb), veh	0	0	0	0	0	0	0	0	0	0	0	0
Ped-Bike Adj(A_pbT)	1.00		0.99	1.00		0.99	1.00		0.99	1.00		0.99
Parking Bus, Adj	1.00	1.00	1.00	1.00	1.00	1.00	1.00	1.00	1.00	1.00	1.00	1.00
Adj Sat Flow, veh/h/ln	1863	1863	1900	1863	1863	1900	1863	1863	1863	1863	1863	1900
Adj Flow Rate, veh/h	178	945	258	592	1075	168	541	985	340	380	1082	77
Adj No. of Lanes	1	3	0	2	3	0	2	3	1	2	3	0
Peak Hour Factor	0.95	0.95	0.95	0.95	0.95	0.95	0.95	0.95	0.95	0.95	0.95	0.95
Percent Heavy Veh, %	2	2	2	2	2	2	2	2	2	2	2	2
Cap, veh/h	199	1076	293	462	1298	203	495	1502	463	428	1336	95
Arrive On Green	0.11	0.27	0.27	0.27	0.59	0.59	0.14	0.30	0.30	0.12	0.28	0.28
Sat Flow, veh/h	1774	3970	1081	3442	4429	691	3442	5085	1567	3442	4845	344
Grp Volume(v), veh/h	178	807	396	592	822	421	541	985	340	380	757	402
Grp Sat Flow(s),veh/h/ln	1774	1695	1661	1721	1695	1731	1721	1695	1567	1721	1695	1799
Q Serve(g_s), s	15.8	36.4	36.6	21.5	31.2	31.3	23.0	27.1	31.2	17.4	33.3	33.4
Cycle Q Clear(g_c), s	15.8	36.4	36.6	21.5	31.2	31.3	23.0	27.1	31.2	17.4	33.3	33.4
Prop In Lane	1.00		0.65	1.00		0.40	1.00		1.00	1.00		0.19
Lane Grp Cap(c), veh/h	199	919	450	462	993	507	495	1502	463	428	935	496
V/C Ratio(X)	0.89	0.88	0.88	1.28	0.83	0.83	1.09	0.66	0.73	0.89	0.81	0.81
Avail Cap(c_a), veh/h	238	964	472	462	993	507	495	1502	463	495	935	496
HCM Platoon Ratio	1.00	1.00	1.00	2.00	2.00	2.00	1.00	1.00	1.00	1.00	1.00	1.00
Upstream Filter(I)	1.00	1.00	1.00	0.71	0.71	0.71	1.00	1.00	1.00	1.00	1.00	1.00
Uniform Delay (d), s/veh	70.1	55.8	55.8	58.5	29.9	29.9	68.5	49.3	50.7	69.0	54.0	54.0
Incr Delay (d2), s/veh	28.4	9.0	16.8	137.7	4.3	8.2	68.3	2.3	9.9	16.1	7.5	13.4
Initial Q Delay(d3),s/veh	0.0	0.0	0.0	0.0	0.0	0.0	0.0	0.0	0.0	0.0	0.0	0.0
%ile BackOfQ(95%),veh/ln	14.4	25.2	26.0	34.2	20.3	21.4	28.1	18.9	21.1	14.2	23.2	25.4
LnGrp Delay(d),s/veh	98.5	64.8	72.7	196.2	34.2	38.1	136.8	51.5	60.7	85.1	61.5	67.4
LnGrp LOS	F	E	E	F	C	D	F	D	E	F	E	E
Approach Vol, veh/h		1381			1835			1866			1539	
Approach Delay, s/veh		71.4			87.3			77.9			68.9	
Approach LOS		E			F			E			E	

Timer	1	2	3	4	5	6	7	8
Assigned Phs	1	2	3	4	5	6	7	8
Phs Duration (G+Y+Rc), s	26.9	55.2	28.0	49.9	30.0	52.1	24.5	53.4
Change Period (Y+Rc), s	7.0	8.0	6.5	6.5	7.0	8.0	6.5	6.5
Max Green Setting (Gmax), s	23.0	42.0	21.5	45.5	23.0	42.0	21.5	45.5
Max Q Clear Time (g_c+I1), s	19.4	33.2	23.5	38.6	25.0	35.4	17.8	33.3
Green Ext Time (p_c), s	0.5	7.6	0.0	4.8	0.0	5.9	0.2	10.4

Intersection Summary	
HCM 2010 Ctrl Delay	77.1
HCM 2010 LOS	E

Movement	EBL	EBT	EBR	WBL	WBT	WBR	NBL	NBT	NBR	SBL	SBT	SBR
Lane Configurations												
Traffic Volume (veh/h)	0	1452	22	17	1724	0	24	0	43	134	4	114
Future Volume (veh/h)	0	1452	22	17	1724	0	24	0	43	134	4	114
Number	1	6	16	5	2	12	7	4	14	3	8	18
Initial Q (Qb), veh	0	0	0	0	0	0	0	0	0	0	0	0
Ped-Bike Adj(A_pbT)	1.00		0.97	1.00		1.00	1.00		1.00	1.00		1.00
Parking Bus, Adj	1.00	1.00	1.00	1.00	1.00	1.00	1.00	1.00	1.00	1.00	1.00	1.00
Adj Sat Flow, veh/h/ln	0	1863	1863	1863	1863	0	1900	1863	1900	1863	1863	1900
Adj Flow Rate, veh/h	0	1528	23	18	1815	0	25	0	45	141	4	120
Adj No. of Lanes	0	3	1	1	3	0	0	1	0	1	1	0
Peak Hour Factor	0.95	0.95	0.95	0.95	0.95	0.95	0.95	0.95	0.95	0.95	0.95	0.95
Percent Heavy Veh, %	0	2	2	2	2	0	2	2	2	2	2	2
Cap, veh/h	0	2536	765	234	2797	0	70	0	125	388	11	337
Arrive On Green	0.00	1.00	1.00	0.01	0.55	0.00	0.12	0.00	0.12	0.22	0.22	0.22
Sat Flow, veh/h	0	5253	1534	1774	5253	0	587	0	1057	1774	51	1540
Grp Volume(v), veh/h	0	1528	23	18	1815	0	70	0	0	141	0	124
Grp Sat Flow(s),veh/h/ln	0	1695	1534	1774	1695	0	1644	0	0	1774	0	1591
Q Serve(g_s), s	0.0	0.3	0.0	0.8	40.0	0.0	6.3	0.0	0.0	10.8	0.0	10.6
Cycle Q Clear(g_c), s	0.0	0.3	0.0	0.8	40.0	0.0	6.3	0.0	0.0	10.8	0.0	10.6
Prop In Lane	0.00		1.00	1.00		0.00	0.36		0.64	1.00		0.97
Lane Grp Cap(c), veh/h	0	2536	765	234	2797	0	195	0	0	388	0	348
V/C Ratio(X)	0.00	0.60	0.03	0.08	0.65	0.00	0.36	0.00	0.00	0.36	0.00	0.36
Avail Cap(c_a), veh/h	0	2536	765	342	2797	0	195	0	0	388	0	348
HCM Platoon Ratio	1.00	2.00	2.00	1.00	1.00	1.00	1.00	1.00	1.00	1.00	1.00	1.00
Upstream Filter(I)	0.00	0.50	0.50	1.00	1.00	0.00	1.00	0.00	0.00	1.00	0.00	1.00
Uniform Delay (d), s/veh	0.0	0.1	0.1	18.3	25.2	0.0	64.9	0.0	0.0	53.0	0.0	53.0
Incr Delay (d2), s/veh	0.0	0.5	0.0	0.1	1.2	0.0	5.1	0.0	0.0	2.6	0.0	2.8
Initial Q Delay(d3),s/veh	0.0	0.0	0.0	0.0	0.0	0.0	0.0	0.0	0.0	0.0	0.0	0.0
%ile BackOfQ(95%),veh/ln	0.0	0.3	0.0	0.7	26.1	0.0	5.6	0.0	0.0	9.4	0.0	8.6
LnGrp Delay(d),s/veh	0.0	0.6	0.1	18.4	26.4	0.0	70.0	0.0	0.0	55.7	0.0	55.8
LnGrp LOS		A	A	B	C		E			E		E
Approach Vol, veh/h		1551			1833			70			265	
Approach Delay, s/veh		0.6			26.3			70.0			55.7	
Approach LOS		A			C			E			E	

Timer	1	2	3	4	5	6	7	8
Assigned Phs		2		4	5	6		8
Phs Duration (G+Y+Rc), s		94.0		25.0	8.2	85.8		41.0
Change Period (Y+Rc), s		6.0		6.0	6.0	6.0		6.0
Max Green Setting (Gmax), s		88.0		19.0	12.0	70.0		35.0
Max Q Clear Time (g_c+I1), s		42.0		8.3	2.8	2.3		12.8
Green Ext Time (p_c), s		40.4		0.2	0.0	56.3		1.1

Intersection Summary	
HCM 2010 Ctrl Delay	18.5
HCM 2010 LOS	B

Notes

User approved pedestrian interval to be less than phase max green.

Movement	EBL	EBT	EBR	WBL	WBT	WBR	NBL	NBT	NBR	SBL	SBT	SBR
Lane Configurations												
Traffic Volume (veh/h)	124	1457	50	218	1620	96	71	186	281	0	0	0
Future Volume (veh/h)	124	1457	50	218	1620	96	71	186	281	0	0	0
Number	7	4	14	3	8	18	5	2	12			
Initial Q (Qb), veh	0	0	0	0	0	0	0	0	0			
Ped-Bike Adj(A_pbT)	1.00		0.97	1.00		0.97	1.00		0.97			
Parking Bus, Adj	1.00	1.00	1.00	1.00	1.00	1.00	1.00	1.00	1.00			
Adj Sat Flow, veh/h/ln	1863	1863	1863	1863	1863	1863	1863	1863	1863			
Adj Flow Rate, veh/h	132	1550	53	232	1723	102	76	198	299			
Adj No. of Lanes	1	3	1	2	3	1	1	1	1			
Peak Hour Factor	0.94	0.94	0.94	0.94	0.94	0.94	0.94	0.94	0.94			
Percent Heavy Veh, %	2	2	2	2	2	2	2	2	2			
Cap, veh/h	155	2833	855	277	2797	846	444	466	386			
Arrive On Green	0.09	0.56	0.56	0.08	0.55	0.55	0.25	0.25	0.25			
Sat Flow, veh/h	1774	5085	1535	3442	5085	1537	1774	1863	1543			
Grp Volume(v), veh/h	132	1550	53	232	1723	102	76	198	299			
Grp Sat Flow(s),veh/h/ln	1774	1695	1535	1721	1695	1537	1774	1863	1543			
Q Serve(g_s), s	11.7	31.1	2.5	10.6	36.9	5.1	5.4	14.3	28.8			
Cycle Q Clear(g_c), s	11.7	31.1	2.5	10.6	36.9	5.1	5.4	14.3	28.8			
Prop In Lane	1.00		1.00	1.00		1.00	1.00		1.00			
Lane Grp Cap(c), veh/h	155	2833	855	277	2797	846	444	466	386			
V/C Ratio(X)	0.85	0.55	0.06	0.84	0.62	0.12	0.17	0.43	0.77			
Avail Cap(c_a), veh/h	333	2833	855	344	2797	846	444	466	386			
HCM Platoon Ratio	1.00	1.00	1.00	1.00	1.00	1.00	1.00	1.00	1.00			
Upstream Filter(I)	1.00	1.00	1.00	1.00	1.00	1.00	1.00	1.00	1.00			
Uniform Delay (d), s/veh	72.0	22.6	16.3	72.5	24.5	17.3	47.0	50.4	55.8			
Incr Delay (d2), s/veh	12.2	0.8	0.1	13.8	0.4	0.1	0.8	2.8	14.1			
Initial Q Delay(d3),s/veh	0.0	0.0	0.0	0.0	0.0	0.0	0.0	0.0	0.0			
%ile BackOfQ(95%),veh/ln	10.4	21.0	2.0	9.5	24.2	4.0	4.9	12.3	19.9			
LnGrp Delay(d),s/veh	84.1	23.3	16.4	86.3	24.9	17.4	47.9	53.2	69.9			
LnGrp LOS	F	C	B	F	C	B	D	D	E			
Approach Vol, veh/h		1735			2057			573				
Approach Delay, s/veh		27.8			31.5			61.2				
Approach LOS		C			C			E				

Timer	1	2	3	4	5	6	7	8
Assigned Phs		2	3	4			7	8
Phs Duration (G+Y+Rc), s		46.0	18.9	95.1			20.0	94.0
Change Period (Y+Rc), s		6.0	6.0	6.0			6.0	6.0
Max Green Setting (Gmax), s		40.0	16.0	86.0			30.0	72.0
Max Q Clear Time (g_c+I1), s		30.8	12.6	33.1			13.7	38.9
Green Ext Time (p_c), s		1.8	0.2	45.6			0.3	30.0

Intersection Summary	
HCM 2010 Ctrl Delay	33.9
HCM 2010 LOS	C

Notes

User approved volume balancing among the lanes for turning movement.

Movement	EBL	EBT	EBR	WBL	WBT	WBR	NBL	NBT	NBR	SBL	SBT	SBR
Lane Configurations												
Traffic Volume (veh/h)	187	1394	317	59	1536	49	296	120	81	93	82	141
Future Volume (veh/h)	187	1394	317	59	1536	49	296	120	81	93	82	141
Number	7	4	14	3	8	18	5	2	12	1	6	16
Initial Q (Qb), veh	0	0	0	0	0	0	0	0	0	0	0	0
Ped-Bike Adj(A_pbT)	1.00		0.99	1.00		0.96	1.00		0.99	1.00		0.99
Parking Bus, Adj	1.00	1.00	1.00	1.00	1.00	1.00	1.00	1.00	1.00	1.00	1.00	1.00
Adj Sat Flow, veh/h/ln	1863	1863	1863	1863	1863	1900	1863	1863	1900	1863	1863	1900
Adj Flow Rate, veh/h	203	1515	345	64	1670	53	322	130	88	101	89	153
Adj No. of Lanes	1	3	1	1	3	0	2	1	0	1	1	0
Peak Hour Factor	0.92	0.92	0.92	0.92	0.92	0.92	0.92	0.92	0.92	0.92	0.92	0.92
Percent Heavy Veh, %	2	2	2	2	2	2	2	2	2	2	2	2
Cap, veh/h	166	1960	602	81	1706	54	364	361	245	122	192	329
Arrive On Green	0.09	0.39	0.39	0.05	0.34	0.34	0.11	0.35	0.35	0.07	0.31	0.31
Sat Flow, veh/h	1774	5085	1561	1774	5055	160	3442	1032	699	1774	612	1052
Grp Volume(v), veh/h	203	1515	345	64	1120	603	322	0	218	101	0	242
Grp Sat Flow(s),veh/h/ln	1774	1695	1561	1774	1695	1826	1721	0	1731	1774	0	1664
Q Serve(g_s), s	15.0	41.7	27.9	5.7	52.3	52.3	14.8	0.0	15.0	9.0	0.0	18.7
Cycle Q Clear(g_c), s	15.0	41.7	27.9	5.7	52.3	52.3	14.8	0.0	15.0	9.0	0.0	18.7
Prop In Lane	1.00		1.00	1.00		0.09	1.00		0.40	1.00		0.63
Lane Grp Cap(c), veh/h	166	1960	602	81	1144	616	364	0	606	122	0	521
V/C Ratio(X)	1.22	0.77	0.57	0.79	0.98	0.98	0.88	0.00	0.36	0.83	0.00	0.46
Avail Cap(c_a), veh/h	166	1960	602	166	1144	616	387	0	606	200	0	521
HCM Platoon Ratio	1.00	1.00	1.00	1.00	1.00	1.00	1.00	1.00	1.00	1.00	1.00	1.00
Upstream Filter(I)	1.00	1.00	1.00	1.00	1.00	1.00	1.00	0.00	1.00	1.00	0.00	1.00
Uniform Delay (d), s/veh	72.5	43.0	38.8	75.6	52.4	52.4	70.6	0.0	38.7	73.6	0.0	44.2
Incr Delay (d2), s/veh	141.3	2.0	1.3	15.4	21.5	30.9	20.1	0.0	1.7	13.7	0.0	3.0
Initial Q Delay(d3),s/veh	0.0	0.0	0.0	0.0	0.0	0.0	0.0	0.0	0.0	0.0	0.0	0.0
%ile BackOfQ(95%),veh/ln	25.0	27.2	18.0	5.7	36.5	40.8	12.7	0.0	11.9	8.5	0.0	14.0
LnGrp Delay(d),s/veh	213.8	45.0	40.1	91.0	73.9	83.4	90.7	0.0	40.3	87.3	0.0	47.2
LnGrp LOS	F	D	D	F	E	F	F		D	F		D
Approach Vol, veh/h		2063			1787			540			343	
Approach Delay, s/veh		60.8			77.7			70.3			59.0	
Approach LOS		E			E			E			E	

Timer	1	2	3	4	5	6	7	8
Assigned Phs	1	2	3	4	5	6	7	8
Phs Duration (G+Y+Rc), s	17.0	62.0	13.3	67.7	22.9	56.1	21.0	60.0
Change Period (Y+Rc), s	6.0	6.0	6.0	6.0	6.0	6.0	6.0	6.0
Max Green Setting (Gmax), s	11.0	49.0	15.0	54.0	18.0	49.0	15.0	54.0
Max Q Clear Time (g_c+I1), s	11.0	17.0	7.7	43.7	16.8	20.7	17.0	54.3
Green Ext Time (p_c), s	0.1	3.2	0.1	9.9	0.2	3.1	0.0	0.0

Intersection Summary	
HCM 2010 Ctrl Delay	68.1
HCM 2010 LOS	E

Movement	EBL	EBT	EBR	WBL	WBT	WBR	NBL	NBT	NBR	SBL	SBT	SBR
Lane Configurations												
Traffic Volume (veh/h)	91	96	63	46	104	10	86	1284	11	26	1277	37
Future Volume (veh/h)	91	96	63	46	104	10	86	1284	11	26	1277	37
Number	7	4	14	3	8	18	5	2	12	1	6	16
Initial Q (Qb), veh	0	0	0	0	0	0	0	0	0	0	0	0
Ped-Bike Adj(A_pbT)	0.99		0.98	0.99		0.98	1.00		0.99	1.00		0.99
Parking Bus, Adj	1.00	1.00	1.00	1.00	1.00	1.00	1.00	1.00	1.00	1.00	1.00	1.00
Adj Sat Flow, veh/h/ln	1863	1863	1900	1863	1863	1900	1863	1863	1900	1863	1863	1900
Adj Flow Rate, veh/h	100	105	69	51	114	11	95	1411	12	29	1403	41
Adj No. of Lanes	1	1	0	1	1	0	1	2	0	1	2	0
Peak Hour Factor	0.91	0.91	0.91	0.91	0.91	0.91	0.91	0.91	0.91	0.91	0.91	0.91
Percent Heavy Veh, %	2	2	2	2	2	2	2	2	2	2	2	2
Cap, veh/h	166	165	109	122	265	26	269	2755	23	276	2690	79
Arrive On Green	0.16	0.16	0.16	0.16	0.16	0.16	0.77	0.77	0.77	0.77	0.77	0.77
Sat Flow, veh/h	1248	1042	685	1194	1670	161	368	3596	31	375	3511	102
Grp Volume(v), veh/h	100	0	174	51	0	125	95	694	729	29	706	738
Grp Sat Flow(s),veh/h/ln	1248	0	1726	1194	0	1831	368	1770	1857	375	1770	1844
Q Serve(g_s), s	12.6	0.0	15.1	6.7	0.0	9.9	21.7	24.1	24.2	5.2	24.9	24.9
Cycle Q Clear(g_c), s	22.4	0.0	15.1	21.8	0.0	9.9	46.7	24.1	24.2	29.3	24.9	24.9
Prop In Lane	1.00		0.40	1.00		0.09	1.00		0.02	1.00		0.06
Lane Grp Cap(c), veh/h	166	0	274	122	0	291	269	1356	1423	276	1356	1413
V/C Ratio(X)	0.60	0.00	0.63	0.42	0.00	0.43	0.35	0.51	0.51	0.11	0.52	0.52
Avail Cap(c_a), veh/h	194	0	313	149	0	332	269	1356	1423	276	1356	1413
HCM Platoon Ratio	1.00	1.00	1.00	1.00	1.00	1.00	1.00	1.00	1.00	1.00	1.00	1.00
Upstream Filter(I)	1.00	0.00	1.00	1.00	0.00	1.00	1.00	1.00	1.00	1.00	1.00	1.00
Uniform Delay (d), s/veh	70.9	0.0	63.0	73.1	0.0	60.8	16.4	7.2	7.2	12.8	7.3	7.3
Incr Delay (d2), s/veh	3.8	0.0	3.4	2.3	0.0	1.0	3.6	1.4	1.3	0.8	1.4	1.4
Initial Q Delay(d3),s/veh	0.0	0.0	0.0	0.0	0.0	0.0	0.0	0.0	0.0	0.0	0.0	0.0
%ile BackOfQ(95%),veh/ln	8.0	0.0	11.9	4.1	0.0	8.8	4.4	18.0	18.8	1.1	18.3	19.0
LnGrp Delay(d),s/veh	74.7	0.0	66.3	75.4	0.0	61.8	20.0	8.6	8.5	13.6	8.7	8.7
LnGrp LOS	E		E	E		E	B	A	A	B	A	A
Approach Vol, veh/h		274			176			1518			1473	
Approach Delay, s/veh		69.4			65.7			9.3			8.8	
Approach LOS		E			E			A			A	

Timer	1	2	3	4	5	6	7	8
Assigned Phs		2		4		6		8
Phs Duration (G+Y+Rc), s		128.6		31.4		128.6		31.4
Change Period (Y+Rc), s		6.0		6.0		6.0		6.0
Max Green Setting (Gmax), s		119.0		29.0		119.0		29.0
Max Q Clear Time (g_c+I1), s		48.7		24.4		31.3		23.8
Green Ext Time (p_c), s		52.8		1.0		61.9		1.1

Intersection Summary	
HCM 2010 Ctrl Delay	16.7
HCM 2010 LOS	B

Movement	EBL	EBT	EBR	WBL	WBT	WBR	NBL	NBT	NBR	SBL	SBT	SBR
Lane Configurations												
Traffic Volume (veh/h)	154	54	145	106	66	120	121	1302	17	69	1568	13
Future Volume (veh/h)	154	54	145	106	66	120	121	1302	17	69	1568	13
Number	7	4	14	3	8	18	5	2	12	1	6	16
Initial Q (Qb), veh	0	0	0	0	0	0	0	0	0	0	0	0
Ped-Bike Adj(A_pbT)	1.00		0.99	1.00		0.98	1.00		1.00	1.00		0.98
Parking Bus, Adj	1.00	1.00	1.00	1.00	1.00	1.00	1.00	1.00	1.00	1.00	1.00	1.00
Adj Sat Flow, veh/h/ln	1863	1863	1900	1863	1863	1863	1863	1863	1863	1863	1863	1900
Adj Flow Rate, veh/h	162	57	153	112	69	126	127	1371	18	73	1651	14
Adj No. of Lanes	1	1	0	1	1	2	1	3	1	2	3	0
Peak Hour Factor	0.95	0.95	0.95	0.95	0.95	0.95	0.95	0.95	0.95	0.95	0.95	0.95
Percent Heavy Veh, %	2	2	2	2	2	2	2	2	2	2	2	2
Cap, veh/h	282	71	190	171	179	264	148	2794	866	113	2594	22
Arrive On Green	0.16	0.16	0.16	0.10	0.10	0.10	0.08	0.55	0.55	0.03	0.50	0.50
Sat Flow, veh/h	1774	444	1192	1774	1863	2743	1774	5085	1576	3442	5200	44
Grp Volume(v), veh/h	162	0	210	112	69	126	127	1371	18	73	1076	589
Grp Sat Flow(s),veh/h/ln	1774	0	1636	1774	1863	1372	1774	1695	1576	1721	1695	1854
Q Serve(g_s), s	13.5	0.0	19.8	9.7	5.6	7.0	11.3	26.6	0.8	3.4	37.3	37.3
Cycle Q Clear(g_c), s	13.5	0.0	19.8	9.7	5.6	7.0	11.3	26.6	0.8	3.4	37.3	37.3
Prop In Lane	1.00		0.73	1.00		1.00	1.00		1.00	1.00		0.02
Lane Grp Cap(c), veh/h	282	0	260	171	179	264	148	2794	866	113	1691	925
V/C Ratio(X)	0.57	0.00	0.81	0.66	0.38	0.48	0.86	0.49	0.02	0.65	0.64	0.64
Avail Cap(c_a), veh/h	444	0	409	421	442	652	188	2794	866	366	1691	925
HCM Platoon Ratio	1.00	1.00	1.00	1.00	1.00	1.00	1.00	1.00	1.00	1.00	1.00	1.00
Upstream Filter(I)	1.00	0.00	1.00	1.00	1.00	1.00	1.00	1.00	1.00	1.00	1.00	1.00
Uniform Delay (d), s/veh	62.3	0.0	64.9	69.7	67.9	68.5	72.4	22.2	16.4	76.4	29.4	29.4
Incr Delay (d2), s/veh	1.8	0.0	6.4	4.2	1.3	1.3	25.6	0.6	0.0	6.0	1.8	3.3
Initial Q Delay(d3),s/veh	0.0	0.0	0.0	0.0	0.0	0.0	0.0	0.0	0.0	0.0	0.0	0.0
%ile BackOfQ(95%),veh/ln	11.1	0.0	14.5	8.7	5.3	4.8	10.8	18.4	0.7	3.1	24.9	27.3
LnGrp Delay(d),s/veh	64.1	0.0	71.3	74.0	69.2	69.8	98.0	22.9	16.5	82.5	31.3	32.8
LnGrp LOS	E		E	E	E	E	F	C	B	F	C	C
Approach Vol, veh/h		372			307			1516			1738	
Approach Delay, s/veh		68.2			71.2			29.1			33.9	
Approach LOS		E			E			C			C	

Timer	1	2	3	4	5	6	7	8
Assigned Phs	1	2		4	5	6		8
Phs Duration (G+Y+Rc), s	12.3	94.9		31.4	20.4	86.8		21.4
Change Period (Y+Rc), s	7.0	7.0		6.0	7.0	7.0		6.0
Max Green Setting (Gmax), s	17.0	39.0		40.0	17.0	39.0		38.0
Max Q Clear Time (g_c+I1), s	5.4	28.6		21.8	13.3	39.3		11.7
Green Ext Time (p_c), s	0.1	9.8		1.6	0.1	0.0		1.2

Intersection Summary	
HCM 2010 Ctrl Delay	38.2
HCM 2010 LOS	D

Future (2020) Background SYNCHRO Output

Movement	EBL	EBT	EBR	WBL	WBT	WBR	NBL	NBT	NBR	SBL	SBT	SBR
Lane Configurations												
Traffic Volume (veh/h)	0	1528	37	114	1692	0	0	0	0	236	617	41
Future Volume (veh/h)	0	1528	37	114	1692	0	0	0	0	236	617	41
Number	7	4	14	3	8	18				1	6	16
Initial Q (Qb), veh	0	0	0	0	0	0				0	0	0
Ped-Bike Adj(A_pbT)	1.00		1.00	1.00		1.00				1.00		1.00
Parking Bus, Adj	1.00	1.00	1.00	1.00	1.00	1.00				1.00	1.00	1.00
Adj Sat Flow, veh/h/ln	0	1863	1900	1863	1863	0				1900	1863	1900
Adj Flow Rate, veh/h	0	1608	39	120	1781	0				248	649	43
Adj No. of Lanes	0	3	0	1	3	0				0	4	0
Peak Hour Factor	0.95	0.95	0.95	0.95	0.95	0.95				0.95	0.95	0.95
Percent Heavy Veh, %	0	2	2	2	2	0				0	2	0
Cap, veh/h	0	2326	56	142	2881	0				601	1739	115
Arrive On Green	0.00	0.46	0.46	0.16	1.00	0.00				0.36	0.36	0.36
Sat Flow, veh/h	0	5274	124	1774	5253	0				1662	4811	318
Grp Volume(v), veh/h	0	1067	580	120	1781	0				266	430	244
Grp Sat Flow(s),veh/h/ln	0	1695	1840	1774	1695	0				1780	1602	1807
Q Serve(g_s), s	0.0	40.0	40.0	10.5	0.0	0.0				17.9	15.8	16.0
Cycle Q Clear(g_c), s	0.0	40.0	40.0	10.5	0.0	0.0				17.9	15.8	16.0
Prop In Lane	0.00		0.07	1.00		0.00				0.93		0.18
Lane Grp Cap(c), veh/h	0	1544	838	142	2881	0				643	1158	653
V/C Ratio(X)	0.00	0.69	0.69	0.85	0.62	0.00				0.41	0.37	0.37
Avail Cap(c_a), veh/h	0	1610	874	466	3909	0				643	1158	653
HCM Platoon Ratio	1.00	1.00	1.00	2.00	2.00	1.00				1.00	1.00	1.00
Upstream Filter(I)	0.00	1.00	1.00	0.91	0.91	0.00				1.00	1.00	1.00
Uniform Delay (d), s/veh	0.0	34.6	34.6	66.3	0.0	0.0				38.3	37.7	37.7
Incr Delay (d2), s/veh	0.0	1.2	2.2	11.9	0.2	0.0				2.0	0.9	1.6
Initial Q Delay(d3),s/veh	0.0	0.0	0.0	0.0	0.0	0.0				0.0	0.0	0.0
%ile BackOfQ(95%),veh/ln	0.0	26.1	28.3	9.3	0.1	0.0				14.1	11.5	13.0
LnGrp Delay(d),s/veh	0.0	35.8	36.9	78.1	0.2	0.0				40.3	38.6	39.3
LnGrp LOS		D	D	E	A					D	D	D
Approach Vol, veh/h		1647			1901						940	
Approach Delay, s/veh		36.2			5.1						39.3	
Approach LOS		D			A						D	

Timer	1	2	3	4	5	6	7	8
Assigned Phs			3	4		6		8
Phs Duration (G+Y+Rc), s			17.8	77.9		64.4		95.6
Change Period (Y+Rc), s			5.0	5.0		6.5		5.0
Max Green Setting (Gmax), s			42.0	76.0		25.5		123.0
Max Q Clear Time (g_c+I1), s			12.5	42.0		19.9		2.0
Green Ext Time (p_c), s			0.3	30.8		2.8		88.6

Intersection Summary	
HCM 2010 Ctrl Delay	23.7
HCM 2010 LOS	C

Movement	EBL	EBT	EBR	WBL	WBT	WBR	NBL	NBT	NBR	SBL	SBT	SBR
Lane Configurations												
Traffic Volume (veh/h)	32	1717	0	0	1613	24	188	143	71	0	0	0
Future Volume (veh/h)	32	1717	0	0	1613	24	188	143	71	0	0	0
Number	7	4	14	3	8	18	5	2	12			
Initial Q (Qb), veh	0	0	0	0	0	0	0	0	0			
Ped-Bike Adj(A_pbT)	1.00		1.00	1.00		0.99	1.00		1.00			
Parking Bus, Adj	1.00	1.00	1.00	1.00	1.00	1.00	1.00	1.00	1.00			
Adj Sat Flow, veh/h/ln	1863	1863	0	0	1863	1900	1863	1863	1863			
Adj Flow Rate, veh/h	34	1807	0	0	1698	25	198	151	75			
Adj No. of Lanes	1	2	0	0	4	0	1	1	1			
Peak Hour Factor	0.95	0.95	0.95	0.95	0.95	0.95	0.95	0.95	0.95			
Percent Heavy Veh, %	2	2	0	0	2	2	2	2	2			
Cap, veh/h	44	1982	0	0	3302	49	659	692	585			
Arrive On Green	0.05	1.00	0.00	0.00	0.50	0.50	0.37	0.37	0.37			
Sat Flow, veh/h	1774	3632	0	0	6814	96	1774	1863	1577			
Grp Volume(v), veh/h	34	1807	0	0	1245	478	198	151	75			
Grp Sat Flow(s),veh/h/ln	1774	1770	0	0	1602	1844	1774	1863	1577			
Q Serve(g_s), s	3.0	0.0	0.0	0.0	27.8	27.8	12.6	8.9	5.0			
Cycle Q Clear(g_c), s	3.0	0.0	0.0	0.0	27.8	27.8	12.6	8.9	5.0			
Prop In Lane	1.00		0.00	0.00		0.05	1.00		1.00			
Lane Grp Cap(c), veh/h	44	1982	0	0	2422	929	659	692	585			
V/C Ratio(X)	0.77	0.91	0.00	0.00	0.51	0.51	0.30	0.22	0.13			
Avail Cap(c_a), veh/h	521	2743	0	0	2422	929	659	692	585			
HCM Platoon Ratio	2.00	2.00	1.00	1.00	1.00	1.00	1.00	1.00	1.00			
Upstream Filter(I)	0.57	0.57	0.00	0.00	1.00	1.00	1.00	1.00	1.00			
Uniform Delay (d), s/veh	75.6	0.0	0.0	0.0	26.6	26.6	35.6	34.4	33.2			
Incr Delay (d2), s/veh	14.7	2.3	0.0	0.0	0.2	0.5	1.2	0.7	0.5			
Initial Q Delay(d3),s/veh	0.0	0.0	0.0	0.0	0.0	0.0	0.0	0.0	0.0			
%ile BackOfQ(95%),veh/ln	3.0	1.2	0.0	0.0	18.0	20.4	10.6	8.3	4.1			
LnGrp Delay(d),s/veh	90.3	2.3	0.0	0.0	26.8	27.1	36.8	35.1	33.7			
LnGrp LOS	F	A			C	C	D	D	C			
Approach Vol, veh/h		1841			1723			424				
Approach Delay, s/veh		4.0			26.8			35.6				
Approach LOS		A			C			D				

Timer	1	2	3	4	5	6	7	8
Assigned Phs		2		4			7	8
Phs Duration (G+Y+Rc), s		65.4		94.6			9.0	85.6
Change Period (Y+Rc), s		6.0		5.0			5.0	5.0
Max Green Setting (Gmax), s		25.0		124.0			47.0	72.0
Max Q Clear Time (g_c+I1), s		14.6		2.0			5.0	29.8
Green Ext Time (p_c), s		1.3		87.6			0.1	38.5

Intersection Summary	
HCM 2010 Ctrl Delay	17.2
HCM 2010 LOS	B

Movement	EBL	EBT	EBR	WBL	WBT	WBR	NBL	NBT	NBR	SBL	SBT	SBR
Lane Configurations												
Traffic Volume (veh/h)	188	992	497	588	1054	94	315	854	344	471	1241	45
Future Volume (veh/h)	188	992	497	588	1054	94	315	854	344	471	1241	45
Number	7	4	14	3	8	18	5	2	12	1	6	16
Initial Q (Qb), veh	0	0	0	0	0	0	0	0	0	0	0	0
Ped-Bike Adj(A_pbT)	1.00		0.99	1.00		0.99	1.00		0.99	1.00		1.00
Parking Bus, Adj	1.00	1.00	1.00	1.00	1.00	1.00	1.00	1.00	1.00	1.00	1.00	1.00
Adj Sat Flow, veh/h/ln	1863	1863	1900	1863	1863	1900	1863	1863	1863	1863	1863	1900
Adj Flow Rate, veh/h	198	1044	523	619	1109	99	332	899	362	496	1306	47
Adj No. of Lanes	1	3	0	2	3	0	2	3	1	2	3	0
Peak Hour Factor	0.95	0.95	0.95	0.95	0.95	0.95	0.95	0.95	0.95	0.95	0.95	0.95
Percent Heavy Veh, %	2	2	2	2	2	2	2	2	2	2	2	2
Cap, veh/h	219	922	426	570	1492	133	379	1303	402	452	1397	50
Arrive On Green	0.12	0.27	0.27	0.11	0.21	0.21	0.11	0.26	0.26	0.13	0.28	0.28
Sat Flow, veh/h	1774	3390	1568	3442	4749	424	3442	5085	1570	3442	5039	181
Grp Volume(v), veh/h	198	1044	523	619	791	417	332	899	362	496	879	474
Grp Sat Flow(s),veh/h/ln	1774	1695	1568	1721	1695	1783	1721	1695	1570	1721	1695	1830
Q Serve(g_s), s	17.6	43.5	43.5	26.5	35.0	35.0	15.2	25.6	35.7	21.0	40.5	40.5
Cycle Q Clear(g_c), s	17.6	43.5	43.5	26.5	35.0	35.0	15.2	25.6	35.7	21.0	40.5	40.5
Prop In Lane	1.00		1.00	1.00		0.24	1.00		1.00	1.00		0.10
Lane Grp Cap(c), veh/h	219	922	426	570	1065	560	379	1303	402	452	940	507
V/C Ratio(X)	0.91	1.13	1.23	1.09	0.74	0.74	0.88	0.69	0.90	1.10	0.93	0.93
Avail Cap(c_a), veh/h	238	922	426	570	1065	560	452	1303	402	452	940	507
HCM Platoon Ratio	1.00	1.00	1.00	0.67	0.67	0.67	1.00	1.00	1.00	1.00	1.00	1.00
Upstream Filter(I)	1.00	1.00	1.00	0.79	0.79	0.79	1.00	1.00	1.00	1.00	1.00	1.00
Uniform Delay (d), s/veh	69.2	58.3	58.3	71.1	57.1	57.1	70.1	53.8	57.5	69.5	56.4	56.4
Incr Delay (d2), s/veh	32.7	73.3	121.4	59.2	2.2	4.2	15.3	3.0	25.6	71.6	17.3	26.7
Initial Q Delay(d3),s/veh	0.0	0.0	0.0	0.0	0.0	0.0	0.0	0.0	0.0	0.0	0.0	0.0
%ile BackOfQ(95%),veh/ln	16.0	53.5	59.8	31.1	22.7	24.1	12.7	18.1	25.4	26.0	28.7	32.2
LnGrp Delay(d),s/veh	101.9	131.5	179.7	130.3	59.4	61.4	85.4	56.8	83.1	141.1	73.7	83.1
LnGrp LOS	F	F	F	F	E	E	F	E	F	F	E	F
Approach Vol, veh/h		1765			1827			1593			1849	
Approach Delay, s/veh		142.5			83.8			68.7			94.2	
Approach LOS		F			F			E			F	

Timer	1	2	3	4	5	6	7	8
Assigned Phs	1	2	3	4	5	6	7	8
Phs Duration (G+Y+Rc), s	28.0	49.0	33.0	50.0	24.6	52.4	26.2	56.8
Change Period (Y+Rc), s	7.0	8.0	6.5	6.5	7.0	8.0	6.5	6.5
Max Green Setting (Gmax), s	21.0	41.0	26.5	43.5	21.0	41.0	21.5	48.5
Max Q Clear Time (g_c+I1), s	23.0	37.7	28.5	45.5	17.2	42.5	19.6	37.0
Green Ext Time (p_c), s	0.0	3.1	0.0	0.0	0.4	0.0	0.1	10.4

Intersection Summary	
HCM 2010 Ctrl Delay	97.8
HCM 2010 LOS	F

Movement	EBL	EBT	EBR	WBL	WBT	WBR	NBL	NBT	NBR	SBL	SBT	SBR
Lane Configurations												
Traffic Volume (veh/h)	0	1761	22	21	1500	0	13	0	26	174	0	188
Future Volume (veh/h)	0	1761	22	21	1500	0	13	0	26	174	0	188
Number	1	6	16	5	2	12	7	4	14	3	8	18
Initial Q (Qb), veh	0	0	0	0	0	0	0	0	0	0	0	0
Ped-Bike Adj(A_pbT)	1.00		0.98	1.00		1.00	1.00		1.00	1.00		1.00
Parking Bus, Adj	1.00	1.00	1.00	1.00	1.00	1.00	1.00	1.00	1.00	1.00	1.00	1.00
Adj Sat Flow, veh/h/ln	0	1863	1863	1863	1863	0	1900	1863	1900	1863	1863	1900
Adj Flow Rate, veh/h	0	1914	24	23	1630	0	14	0	28	189	0	204
Adj No. of Lanes	0	3	1	1	3	0	0	1	0	1	1	0
Peak Hour Factor	0.92	0.92	0.92	0.92	0.92	0.92	0.92	0.92	0.92	0.92	0.92	0.92
Percent Heavy Veh, %	0	2	2	2	2	0	2	2	2	2	2	2
Cap, veh/h	0	2525	770	128	2797	0	65	0	130	388	0	346
Arrive On Green	0.00	0.66	0.66	0.02	0.55	0.00	0.12	0.00	0.12	0.22	0.00	0.22
Sat Flow, veh/h	0	5253	1551	1774	5253	0	547	0	1095	1774	0	1583
Grp Volume(v), veh/h	0	1914	24	23	1630	0	42	0	0	189	0	204
Grp Sat Flow(s),veh/h/ln	0	1695	1551	1774	1695	0	1642	0	0	1774	0	1583
Q Serve(g_s), s	0.0	41.0	0.9	1.0	34.0	0.0	3.7	0.0	0.0	14.9	0.0	18.5
Cycle Q Clear(g_c), s	0.0	41.0	0.9	1.0	34.0	0.0	3.7	0.0	0.0	14.9	0.0	18.5
Prop In Lane	0.00		1.00	1.00		0.00	0.33		0.67	1.00		1.00
Lane Grp Cap(c), veh/h	0	2525	770	128	2797	0	195	0	0	388	0	346
V/C Ratio(X)	0.00	0.76	0.03	0.18	0.58	0.00	0.22	0.00	0.00	0.49	0.00	0.59
Avail Cap(c_a), veh/h	0	2525	770	233	2797	0	195	0	0	388	0	346
HCM Platoon Ratio	1.00	1.33	1.33	1.00	1.00	1.00	1.00	1.00	1.00	1.00	1.00	1.00
Upstream Filter(I)	0.00	0.09	0.09	1.00	1.00	0.00	1.00	0.00	0.00	1.00	0.00	1.00
Uniform Delay (d), s/veh	0.0	20.6	13.8	24.7	23.8	0.0	63.8	0.0	0.0	54.7	0.0	56.0
Incr Delay (d2), s/veh	0.0	0.2	0.0	0.7	0.9	0.0	2.5	0.0	0.0	4.3	0.0	7.2
Initial Q Delay(d3),s/veh	0.0	0.0	0.0	0.0	0.0	0.0	0.0	0.0	0.0	0.0	0.0	0.0
%ile BackOfQ(95%),veh/ln	0.0	21.1	0.7	0.9	22.7	0.0	3.3	0.0	0.0	12.3	0.0	13.7
LnGrp Delay(d),s/veh	0.0	20.8	13.8	25.4	24.7	0.0	66.3	0.0	0.0	59.0	0.0	63.2
LnGrp LOS		C	B	C	C		E			E		E
Approach Vol, veh/h		1938			1653			42			393	
Approach Delay, s/veh		20.8			24.7			66.3			61.2	
Approach LOS		C			C			E			E	

Timer	1	2	3	4	5	6	7	8
Assigned Phs		2		4	5	6		8
Phs Duration (G+Y+Rc), s		94.0		25.0	8.6	85.4		41.0
Change Period (Y+Rc), s		6.0		6.0	6.0	6.0		6.0
Max Green Setting (Gmax), s		88.0		19.0	12.0	70.0		35.0
Max Q Clear Time (g_c+I1), s		36.0		5.7	3.0	43.0		20.5
Green Ext Time (p_c), s		46.7		0.1	0.0	25.5		1.6

Intersection Summary	
HCM 2010 Ctrl Delay	26.8
HCM 2010 LOS	C

Notes

User approved pedestrian interval to be less than phase max green.

Movement	EBL	EBT	EBR	WBL	WBT	WBR	NBL	NBT	NBR	SBL	SBT	SBR
Lane Configurations												
Traffic Volume (veh/h)	84	1731	70	195	1422	60	72	17	200	0	0	0
Future Volume (veh/h)	84	1731	70	195	1422	60	72	17	200	0	0	0
Number	7	4	14	3	8	18	5	2	12			
Initial Q (Qb), veh	0	0	0	0	0	0	0	0	0			
Ped-Bike Adj(A_pbT)	1.00		0.99	1.00		0.99	1.00		1.00			
Parking Bus, Adj	1.00	1.00	1.00	1.00	1.00	1.00	1.00	1.00	1.00			
Adj Sat Flow, veh/h/ln	1863	1863	1863	1863	1863	1863	1863	1863	1863			
Adj Flow Rate, veh/h	88	1822	74	205	1497	63	47	59	211			
Adj No. of Lanes	1	3	1	2	3	1	1	1	1			
Peak Hour Factor	0.95	0.95	0.95	0.95	0.95	0.95	0.95	0.95	0.95			
Percent Heavy Veh, %	2	2	2	2	2	2	2	2	2			
Cap, veh/h	109	2524	775	251	2583	796	565	593	503			
Arrive On Green	0.06	0.50	0.50	0.07	0.51	0.51	0.32	0.32	0.32			
Sat Flow, veh/h	1774	5085	1561	3442	5085	1566	1774	1863	1582			
Grp Volume(v), veh/h	88	1822	74	205	1497	63	47	59	211			
Grp Sat Flow(s),veh/h/ln	1774	1695	1561	1721	1695	1566	1774	1863	1582			
Q Serve(g_s), s	7.8	45.0	4.0	9.4	32.8	3.3	3.0	3.6	16.8			
Cycle Q Clear(g_c), s	7.8	45.0	4.0	9.4	32.8	3.3	3.0	3.6	16.8			
Prop In Lane	1.00		1.00	1.00		1.00	1.00		1.00			
Lane Grp Cap(c), veh/h	109	2524	775	251	2583	796	565	593	503			
V/C Ratio(X)	0.81	0.72	0.10	0.82	0.58	0.08	0.08	0.10	0.42			
Avail Cap(c_a), veh/h	266	2733	839	344	2583	796	565	593	503			
HCM Platoon Ratio	1.00	1.00	1.00	1.00	1.00	1.00	1.00	1.00	1.00			
Upstream Filter(I)	1.00	1.00	1.00	1.00	1.00	1.00	1.00	1.00	1.00			
Uniform Delay (d), s/veh	74.2	31.6	21.3	73.1	27.4	20.2	38.2	38.4	42.9			
Incr Delay (d2), s/veh	13.3	0.9	0.1	10.4	0.3	0.0	0.3	0.3	2.6			
Initial Q Delay(d3),s/veh	0.0	0.0	0.0	0.0	0.0	0.0	0.0	0.0	0.0			
%ile BackOfQ(95%),veh/ln	7.6	28.9	3.1	8.4	21.9	2.6	2.7	3.4	12.2			
LnGrp Delay(d),s/veh	87.5	32.5	21.4	83.6	27.8	20.2	38.5	38.7	45.5			
LnGrp LOS	F	C	C	F	C	C	D	D	D			
Approach Vol, veh/h		1984			1765			317				
Approach Delay, s/veh		34.5			34.0			43.2				
Approach LOS		C			C			D				

Timer	1	2	3	4	5	6	7	8
Assigned Phs		2	3	4			7	8
Phs Duration (G+Y+Rc), s		56.9	17.7	85.4			15.8	87.3
Change Period (Y+Rc), s		6.0	6.0	6.0			6.0	6.0
Max Green Setting (Gmax), s		40.0	16.0	86.0			24.0	78.0
Max Q Clear Time (g_c+I1), s		18.8	11.4	47.0			9.8	34.8
Green Ext Time (p_c), s		1.1	0.3	32.4			0.2	38.4

Intersection Summary	
HCM 2010 Ctrl Delay	35.0
HCM 2010 LOS	C

Notes

User approved volume balancing among the lanes for turning movement.

Movement	EBL	EBT	EBR	WBL	WBT	WBR	NBL	NBT	NBR	SBL	SBT	SBR
Lane Configurations												
Traffic Volume (veh/h)	91	1400	228	47	1447	33	251	50	26	88	78	144
Future Volume (veh/h)	91	1400	228	47	1447	33	251	50	26	88	78	144
Number	7	4	14	3	8	18	5	2	12	1	6	16
Initial Q (Qb), veh	0	0	0	0	0	0	0	0	0	0	0	0
Ped-Bike Adj(A_pbT)	1.00		0.98	1.00		0.96	1.00		0.99	1.00		0.99
Parking Bus, Adj	1.00	1.00	1.00	1.00	1.00	1.00	1.00	1.00	1.00	1.00	1.00	1.00
Adj Sat Flow, veh/h/ln	1863	1863	1863	1863	1863	1900	1863	1863	1900	1863	1863	1900
Adj Flow Rate, veh/h	99	1522	248	51	1573	36	273	54	28	96	85	157
Adj No. of Lanes	1	3	1	1	3	0	2	1	0	1	1	0
Peak Hour Factor	0.92	0.92	0.92	0.92	0.92	0.92	0.92	0.92	0.92	0.92	0.92	0.92
Percent Heavy Veh, %	2	2	2	2	2	2	2	2	2	2	2	2
Cap, veh/h	119	1851	568	66	1706	39	319	442	229	117	208	384
Arrive On Green	0.07	0.36	0.36	0.04	0.33	0.33	0.09	0.38	0.38	0.07	0.36	0.36
Sat Flow, veh/h	1774	5085	1559	1774	5109	117	3442	1153	598	1774	583	1077
Grp Volume(v), veh/h	99	1522	248	51	1044	565	273	0	82	96	0	242
Grp Sat Flow(s),veh/h/ln	1774	1695	1559	1774	1695	1836	1721	0	1751	1774	0	1661
Q Serve(g_s), s	8.8	43.5	19.2	4.6	47.4	47.4	12.5	0.0	4.8	8.6	0.0	17.6
Cycle Q Clear(g_c), s	8.8	43.5	19.2	4.6	47.4	47.4	12.5	0.0	4.8	8.6	0.0	17.6
Prop In Lane	1.00		1.00	1.00		0.06	1.00		0.34	1.00		0.65
Lane Grp Cap(c), veh/h	119	1851	568	66	1132	613	319	0	671	117	0	592
V/C Ratio(X)	0.83	0.82	0.44	0.78	0.92	0.92	0.86	0.00	0.12	0.82	0.00	0.41
Avail Cap(c_a), veh/h	144	1851	568	144	1187	642	387	0	671	200	0	592
HCM Platoon Ratio	1.00	1.00	1.00	1.00	1.00	1.00	1.00	1.00	1.00	1.00	1.00	1.00
Upstream Filter(I)	1.00	1.00	1.00	1.00	1.00	1.00	1.00	0.00	1.00	1.00	0.00	1.00
Uniform Delay (d), s/veh	73.7	46.2	38.5	76.4	51.3	51.3	71.5	0.0	31.9	73.8	0.0	38.8
Incr Delay (d2), s/veh	27.9	3.1	0.5	17.7	11.5	18.5	14.7	0.0	0.4	13.3	0.0	2.1
Initial Q Delay(d3),s/veh	0.0	0.0	0.0	0.0	0.0	0.0	0.0	0.0	0.0	0.0	0.0	0.0
%ile BackOfQ(95%),veh/ln	9.0	28.3	13.2	4.6	32.0	35.7	10.8	0.0	4.3	8.1	0.0	13.2
LnGrp Delay(d),s/veh	101.6	49.3	39.0	94.0	62.8	69.8	86.3	0.0	32.3	87.2	0.0	40.9
LnGrp LOS	F	D	D	F	E	E	F		C	F		D
Approach Vol, veh/h		1869			1660			355			338	
Approach Delay, s/veh		50.7			66.1			73.8			54.0	
Approach LOS		D			E			E			D	

Timer	1	2	3	4	5	6	7	8
Assigned Phs	1	2	3	4	5	6	7	8
Phs Duration (G+Y+Rc), s	16.5	67.3	11.9	64.2	20.8	63.0	16.7	59.4
Change Period (Y+Rc), s	6.0	6.0	6.0	6.0	6.0	6.0	6.0	6.0
Max Green Setting (Gmax), s	18.0	49.0	13.0	56.0	18.0	49.0	13.0	56.0
Max Q Clear Time (g_c+I1), s	10.8	6.8	6.6	45.5	14.5	19.6	10.8	49.4
Green Ext Time (p_c), s	0.1	2.2	0.0	10.1	0.3	2.1	0.0	4.0

Intersection Summary	
HCM 2010 Ctrl Delay	59.0
HCM 2010 LOS	E

Movement	EBL	EBT	EBR	WBL	WBT	WBR	NBL	NBT	NBR	SBL	SBT	SBR
Lane Configurations												
Traffic Volume (veh/h)	126	73	93	47	52	15	71	1113	5	27	1522	50
Future Volume (veh/h)	126	73	93	47	52	15	71	1113	5	27	1522	50
Number	7	4	14	3	8	18	5	2	12	1	6	16
Initial Q (Qb), veh	0	0	0	0	0	0	0	0	0	0	0	0
Ped-Bike Adj(A_pbT)	0.99		0.98	0.99		0.98	1.00		0.99	1.00		0.99
Parking Bus, Adj	1.00	1.00	1.00	1.00	1.00	1.00	1.00	1.00	1.00	1.00	1.00	1.00
Adj Sat Flow, veh/h/ln	1863	1863	1900	1863	1863	1900	1863	1863	1900	1863	1863	1900
Adj Flow Rate, veh/h	135	78	100	51	56	16	76	1197	5	29	1637	54
Adj No. of Lanes	1	1	0	1	1	0	1	2	0	1	2	0
Peak Hour Factor	0.93	0.93	0.93	0.93	0.93	0.93	0.93	0.93	0.93	0.93	0.93	0.93
Percent Heavy Veh, %	2	2	2	2	2	2	2	2	2	2	2	2
Cap, veh/h	208	117	150	116	222	63	206	2766	12	346	2675	88
Arrive On Green	0.16	0.16	0.16	0.16	0.16	0.16	0.77	0.77	0.77	0.77	0.77	0.77
Sat Flow, veh/h	1307	734	941	1190	1389	397	290	3614	15	463	3496	115
Grp Volume(v), veh/h	135	0	178	51	0	72	76	586	616	29	826	865
Grp Sat Flow(s),veh/h/ln	1307	0	1675	1190	0	1786	290	1770	1860	463	1770	1842
Q Serve(g_s), s	16.1	0.0	16.0	6.7	0.0	5.6	25.2	18.6	18.6	3.8	32.9	33.3
Cycle Q Clear(g_c), s	21.8	0.0	16.0	22.7	0.0	5.6	58.5	18.6	18.6	22.4	32.9	33.3
Prop In Lane	1.00		0.56	1.00		0.22	1.00		0.01	1.00		0.06
Lane Grp Cap(c), veh/h	208	0	268	116	0	285	206	1354	1423	346	1354	1409
V/C Ratio(X)	0.65	0.00	0.66	0.44	0.00	0.25	0.37	0.43	0.43	0.08	0.61	0.61
Avail Cap(c_a), veh/h	236	0	304	142	0	324	206	1354	1423	346	1354	1409
HCM Platoon Ratio	1.00	1.00	1.00	1.00	1.00	1.00	1.00	1.00	1.00	1.00	1.00	1.00
Upstream Filter(I)	1.00	0.00	1.00	1.00	0.00	1.00	1.00	1.00	1.00	1.00	1.00	1.00
Uniform Delay (d), s/veh	68.4	0.0	63.2	73.9	0.0	58.8	21.3	6.6	6.6	10.5	8.3	8.3
Incr Delay (d2), s/veh	5.1	0.0	4.5	2.6	0.0	0.5	5.0	1.0	1.0	0.5	2.1	2.0
Initial Q Delay(d3),s/veh	0.0	0.0	0.0	0.0	0.0	0.0	0.0	0.0	0.0	0.0	0.0	0.0
%ile BackOfQ(95%),veh/ln	10.2	0.0	12.3	4.2	0.0	5.1	4.1	14.3	14.9	0.9	23.3	24.5
LnGrp Delay(d),s/veh	73.5	0.0	67.7	76.4	0.0	59.3	26.3	7.6	7.6	11.0	10.3	10.3
LnGrp LOS	E		E	E		E	C	A	A	B	B	B
Approach Vol, veh/h		313			123			1278			1720	
Approach Delay, s/veh		70.2			66.4			8.7			10.3	
Approach LOS		E			E			A			B	

Timer	1	2	3	4	5	6	7	8
Assigned Phs		2		4		6		8
Phs Duration (G+Y+Rc), s		128.4		31.6		128.4		31.6
Change Period (Y+Rc), s		6.0		6.0		6.0		6.0
Max Green Setting (Gmax), s		119.0		29.0		119.0		29.0
Max Q Clear Time (g_c+I1), s		60.5		23.8		35.3		24.7
Green Ext Time (p_c), s		46.7		1.0		61.2		0.9

Intersection Summary	
HCM 2010 Ctrl Delay	17.2
HCM 2010 LOS	B

Movement	EBL	EBT	EBR	WBL	WBT	WBR	NBL	NBT	NBR	SBL	SBT	SBR
Lane Configurations												
Traffic Volume (veh/h)	154	110	434	26	9	103	70	1454	18	131	2099	6
Future Volume (veh/h)	154	110	434	26	9	103	70	1454	18	131	2099	6
Number	7	4	14	3	8	18	5	2	12	1	6	16
Initial Q (Qb), veh	0	0	0	0	0	0	0	0	0	0	0	0
Ped-Bike Adj(A_pbT)	1.00		1.00	1.00		0.99	1.00		1.00	1.00		0.99
Parking Bus, Adj	1.00	1.00	1.00	1.00	1.00	1.00	1.00	1.00	1.00	1.00	1.00	1.00
Adj Sat Flow, veh/h/ln	1863	1863	1900	1863	1863	1863	1863	1863	1863	1863	1863	1900
Adj Flow Rate, veh/h	169	121	477	29	10	113	77	1598	20	144	2307	7
Adj No. of Lanes	1	1	0	1	1	2	1	3	1	2	3	0
Peak Hour Factor	0.91	0.91	0.91	0.91	0.91	0.91	0.91	0.91	0.91	0.91	0.91	0.91
Percent Heavy Veh, %	2	2	2	2	2	2	2	2	2	2	2	2
Cap, veh/h	455	84	332	119	125	184	95	2341	726	185	2411	7
Arrive On Green	0.26	0.26	0.26	0.07	0.07	0.07	0.05	0.46	0.46	0.05	0.46	0.46
Sat Flow, veh/h	1774	329	1297	1774	1863	2749	1774	5085	1576	3442	5234	16
Grp Volume(v), veh/h	169	0	598	29	10	113	77	1598	20	144	1494	820
Grp Sat Flow(s),veh/h/ln	1774	0	1627	1774	1863	1375	1774	1695	1576	1721	1695	1860
Q Serve(g_s), s	12.5	0.0	41.0	2.5	0.8	6.4	6.9	39.6	1.1	6.6	68.0	68.1
Cycle Q Clear(g_c), s	12.5	0.0	41.0	2.5	0.8	6.4	6.9	39.6	1.1	6.6	68.0	68.1
Prop In Lane	1.00		0.80	1.00		1.00	1.00		1.00	1.00		0.01
Lane Grp Cap(c), veh/h	455	0	417	119	125	184	95	2341	726	185	1562	857
V/C Ratio(X)	0.37	0.00	1.43	0.24	0.08	0.61	0.81	0.68	0.03	0.78	0.96	0.96
Avail Cap(c_a), veh/h	455	0	417	421	442	653	100	2341	726	194	1562	857
HCM Platoon Ratio	1.00	1.00	1.00	1.00	1.00	1.00	1.00	1.00	1.00	1.00	1.00	1.00
Upstream Filter(I)	1.00	0.00	1.00	1.00	1.00	1.00	1.00	1.00	1.00	1.00	1.00	1.00
Uniform Delay (d), s/veh	48.9	0.0	59.5	70.8	70.0	72.6	74.9	34.0	23.6	74.7	41.6	41.6
Incr Delay (d2), s/veh	0.5	0.0	209.0	1.1	0.3	3.3	36.2	1.6	0.1	17.3	14.6	22.0
Initial Q Delay(d3),s/veh	0.0	0.0	0.0	0.0	0.0	0.0	0.0	0.0	0.0	0.0	0.0	0.0
%ile BackOfQ(95%),veh/ln	10.3	0.0	76.7	2.3	0.8	4.5	7.8	26.0	0.9	6.5	44.6	50.5
LnGrp Delay(d),s/veh	49.4	0.0	268.5	71.9	70.3	75.9	111.1	35.6	23.7	92.1	56.2	63.6
LnGrp LOS	D		F	E	E	E	F	D	C	F	E	E
Approach Vol, veh/h		767			152			1695			2458	
Approach Delay, s/veh		220.2			74.8			38.9			60.8	
Approach LOS		F			E			D			E	

Timer	1	2	3	4	5	6	7	8
Assigned Phs	1	2		4	5	6		8
Phs Duration (G+Y+Rc), s	15.6	80.7		47.0	15.6	80.7		16.7
Change Period (Y+Rc), s	7.0	7.0		6.0	7.0	7.0		6.0
Max Green Setting (Gmax), s	9.0	46.0		41.0	9.0	46.0		38.0
Max Q Clear Time (g_c+I1), s	8.6	41.6		43.0	8.9	70.1		8.4
Green Ext Time (p_c), s	0.0	4.4		0.0	0.0	0.0		0.6

Intersection Summary	
HCM 2010 Ctrl Delay	78.0
HCM 2010 LOS	E

Movement	EBL	EBT	EBR	WBL	WBT	WBR	NBL	NBT	NBR	SBL	SBT	SBR
Lane Configurations												
Traffic Volume (veh/h)	0	1543	53	96	2450	0	0	0	0	163	316	79
Future Volume (veh/h)	0	1543	53	96	2450	0	0	0	0	163	316	79
Number	7	4	14	3	8	18				1	6	16
Initial Q (Qb), veh	0	0	0	0	0	0				0	0	0
Ped-Bike Adj(A_pbT)	1.00		1.00	1.00		1.00				1.00		1.00
Parking Bus, Adj	1.00	1.00	1.00	1.00	1.00	1.00				1.00	1.00	1.00
Adj Sat Flow, veh/h/ln	0	1863	1900	1863	1863	0				1900	1863	1900
Adj Flow Rate, veh/h	0	1677	58	104	2663	0				177	343	86
Adj No. of Lanes	0	3	0	1	3	0				0	4	0
Peak Hour Factor	0.92	0.92	0.92	0.92	0.92	0.92				0.92	0.92	0.92
Percent Heavy Veh, %	0	2	2	2	2	0				0	2	0
Cap, veh/h	0	2610	90	125	3148	0				548	1219	295
Arrive On Green	0.00	0.52	0.52	0.14	1.00	0.00				0.31	0.31	0.31
Sat Flow, veh/h	0	5215	174	1774	5253	0				1774	3944	954
Grp Volume(v), veh/h	0	1126	609	104	2663	0				177	276	153
Grp Sat Flow(s),veh/h/ln	0	1695	1831	1774	1695	0				1774	1602	1694
Q Serve(g_s), s	0.0	38.4	38.5	9.1	0.0	0.0				12.3	10.4	10.9
Cycle Q Clear(g_c), s	0.0	38.4	38.5	9.1	0.0	0.0				12.3	10.4	10.9
Prop In Lane	0.00		0.10	1.00		0.00				1.00		0.56
Lane Grp Cap(c), veh/h	0	1753	947	125	3148	0				548	990	524
V/C Ratio(X)	0.00	0.64	0.64	0.83	0.85	0.00				0.32	0.28	0.29
Avail Cap(c_a), veh/h	0	1753	947	521	3719	0				548	990	524
HCM Platoon Ratio	1.00	1.00	1.00	2.00	2.00	1.00				1.00	1.00	1.00
Upstream Filter(I)	0.00	1.00	1.00	0.68	0.68	0.00				1.00	1.00	1.00
Uniform Delay (d), s/veh	0.0	27.9	27.9	67.8	0.0	0.0				42.4	41.8	42.0
Incr Delay (d2), s/veh	0.0	0.8	1.5	9.2	1.2	0.0				1.6	0.7	1.4
Initial Q Delay(d3),s/veh	0.0	0.0	0.0	0.0	0.0	0.0				0.0	0.0	0.0
%ile BackOfQ(95%),veh/ln	0.0	25.2	27.1	7.7	0.6	0.0				10.3	8.3	9.1
LnGrp Delay(d),s/veh	0.0	28.7	29.4	77.0	1.2	0.0				44.0	42.5	43.4
LnGrp LOS		C	C	E	A					D	D	D
Approach Vol, veh/h		1735			2767						606	
Approach Delay, s/veh		29.0			4.0						43.1	
Approach LOS		C			A						D	

Timer	1	2	3	4	5	6	7	8
Assigned Phs			3	4		6		8
Phs Duration (G+Y+Rc), s			16.3	87.7		56.0		104.0
Change Period (Y+Rc), s			5.0	5.0		6.5		5.0
Max Green Setting (Gmax), s			47.0	65.0		31.5		117.0
Max Q Clear Time (g_c+I1), s			11.1	40.5		14.3		2.0
Green Ext Time (p_c), s			0.3	24.2		3.6		97.0

Intersection Summary	
HCM 2010 Ctrl Delay	17.1
HCM 2010 LOS	B

Movement	EBL	EBT	EBR	WBL	WBT	WBR	NBL	NBT	NBR	SBL	SBT	SBR
Lane Configurations												
Traffic Volume (veh/h)	50	1644	0	0	2208	38	336	356	101	0	0	0
Future Volume (veh/h)	50	1644	0	0	2208	38	336	356	101	0	0	0
Number	7	4	14	3	8	18	5	2	12			
Initial Q (Qb), veh	0	0	0	0	0	0	0	0	0			
Ped-Bike Adj(A_pbT)	1.00		1.00	1.00		0.99	1.00		1.00			
Parking Bus, Adj	1.00	1.00	1.00	1.00	1.00	1.00	1.00	1.00	1.00			
Adj Sat Flow, veh/h/ln	1863	1863	0	0	1863	1900	1863	1863	1863			
Adj Flow Rate, veh/h	54	1787	0	0	2400	41	365	387	110			
Adj No. of Lanes	1	2	0	0	4	0	1	1	1			
Peak Hour Factor	0.92	0.92	0.92	0.92	0.92	0.92	0.92	0.92	0.92			
Percent Heavy Veh, %	2	2	0	0	2	2	2	2	2			
Cap, veh/h	70	1929	0	0	3101	53	685	719	609			
Arrive On Green	0.08	1.00	0.00	0.00	0.47	0.47	0.39	0.39	0.39			
Sat Flow, veh/h	1774	3632	0	0	6796	112	1774	1863	1577			
Grp Volume(v), veh/h	54	1787	0	0	1764	677	365	387	110			
Grp Sat Flow(s),veh/h/ln	1774	1770	0	0	1602	1841	1774	1863	1577			
Q Serve(g_s), s	4.8	0.0	0.0	0.0	48.8	48.8	25.4	25.8	7.4			
Cycle Q Clear(g_c), s	4.8	0.0	0.0	0.0	48.8	48.8	25.4	25.8	7.4			
Prop In Lane	1.00		0.00	0.00		0.06	1.00		1.00			
Lane Grp Cap(c), veh/h	70	1929	0	0	2280	874	685	719	609			
V/C Ratio(X)	0.77	0.93	0.00	0.00	0.77	0.77	0.53	0.54	0.18			
Avail Cap(c_a), veh/h	588	2610	0	0	2280	874	685	719	609			
HCM Platoon Ratio	2.00	2.00	1.00	1.00	1.00	1.00	1.00	1.00	1.00			
Upstream Filter(I)	0.80	0.80	0.00	0.00	1.00	1.00	1.00	1.00	1.00			
Uniform Delay (d), s/veh	73.0	0.0	0.0	0.0	34.9	34.9	37.9	38.0	32.4			
Incr Delay (d2), s/veh	13.5	4.2	0.0	0.0	1.7	4.4	3.0	2.9	0.7			
Initial Q Delay(d3),s/veh	0.0	0.0	0.0	0.0	0.0	0.0	0.0	0.0	0.0			
%ile BackOfQ(95%),veh/ln	4.7	2.0	0.0	0.0	29.6	34.2	19.0	19.9	6.0			
LnGrp Delay(d),s/veh	86.5	4.2	0.0	0.0	36.6	39.3	40.9	40.9	33.0			
LnGrp LOS	F	A			D	D	D	D	C			
Approach Vol, veh/h		1841			2441			862				
Approach Delay, s/veh		6.6			37.4			39.9				
Approach LOS		A			D			D				

Timer	1	2	3	4	5	6	7	8
Assigned Phs		2		4			7	8
Phs Duration (G+Y+Rc), s		67.8		92.2			11.3	80.9
Change Period (Y+Rc), s		6.0		5.0			5.0	5.0
Max Green Setting (Gmax), s		31.0		118.0			53.0	60.0
Max Q Clear Time (g_c+I1), s		27.8		2.0			6.8	50.8
Green Ext Time (p_c), s		1.3		85.2			0.1	9.1

Intersection Summary	
HCM 2010 Ctrl Delay	26.8
HCM 2010 LOS	C

Movement	EBL	EBT	EBR	WBL	WBT	WBR	NBL	NBT	NBR	SBL	SBT	SBR
Lane Configurations												
Traffic Volume (veh/h)	183	1070	640	608	1225	173	556	1296	350	391	1400	79
Future Volume (veh/h)	183	1070	640	608	1225	173	556	1296	350	391	1400	79
Number	7	4	14	3	8	18	5	2	12	1	6	16
Initial Q (Qb), veh	0	0	0	0	0	0	0	0	0	0	0	0
Ped-Bike Adj(A_pbT)	1.00		0.99	1.00		0.99	1.00		0.99	1.00		0.99
Parking Bus, Adj	1.00	1.00	1.00	1.00	1.00	1.00	1.00	1.00	1.00	1.00	1.00	1.00
Adj Sat Flow, veh/h/ln	1863	1863	1900	1863	1863	1900	1863	1863	1863	1863	1863	1900
Adj Flow Rate, veh/h	193	1126	674	640	1289	182	585	1364	368	412	1474	83
Adj No. of Lanes	1	3	0	2	3	0	2	3	1	2	3	0
Peak Hour Factor	0.95	0.95	0.95	0.95	0.95	0.95	0.95	0.95	0.95	0.95	0.95	0.95
Percent Heavy Veh, %	2	2	2	2	2	2	2	2	2	2	2	2
Cap, veh/h	214	964	446	462	1341	189	495	1391	428	457	1293	73
Arrive On Green	0.12	0.28	0.28	0.27	0.60	0.60	0.14	0.27	0.27	0.13	0.26	0.26
Sat Flow, veh/h	1774	3390	1570	3442	4497	635	3442	5085	1566	3442	4924	277
Grp Volume(v), veh/h	193	1126	674	640	972	499	585	1364	368	412	1015	542
Grp Sat Flow(s),veh/h/ln	1774	1695	1570	1721	1695	1742	1721	1695	1566	1721	1695	1811
Q Serve(g_s), s	17.2	45.5	45.5	21.5	43.4	43.4	23.0	42.6	35.7	18.9	42.0	42.0
Cycle Q Clear(g_c), s	17.2	45.5	45.5	21.5	43.4	43.4	23.0	42.6	35.7	18.9	42.0	42.0
Prop In Lane	1.00		1.00	1.00		0.36	1.00		1.00	1.00		0.15
Lane Grp Cap(c), veh/h	214	964	446	462	1011	519	495	1391	428	457	890	475
V/C Ratio(X)	0.90	1.17	1.51	1.38	0.96	0.96	1.18	0.98	0.86	0.90	1.14	1.14
Avail Cap(c_a), veh/h	238	964	446	462	1011	519	495	1391	428	495	890	475
HCM Platoon Ratio	1.00	1.00	1.00	2.00	2.00	2.00	1.00	1.00	1.00	1.00	1.00	1.00
Upstream Filter(I)	1.00	1.00	1.00	0.40	0.40	0.40	1.00	1.00	1.00	1.00	1.00	1.00
Uniform Delay (d), s/veh	69.4	57.3	57.3	58.5	31.4	31.4	68.5	57.7	55.2	68.4	59.0	59.0
Incr Delay (d2), s/veh	31.7	86.9	240.7	178.2	10.4	16.5	101.2	19.9	19.6	18.8	76.7	85.8
Initial Q Delay(d3),s/veh	0.0	0.0	0.0	0.0	0.0	0.0	0.0	0.0	0.0	0.0	0.0	0.0
%ile BackOfQ(95%),veh/ln	15.6	59.3	89.2	38.9	26.2	27.9	32.2	30.3	24.7	15.4	52.4	58.2
LnGrp Delay(d),s/veh	101.1	144.1	298.0	236.7	41.8	48.0	169.7	77.6	74.8	87.2	135.7	144.8
LnGrp LOS	F	F	F	F	D	D	F	E	E	F	F	F
Approach Vol, veh/h		1993			2111			2317			1969	
Approach Delay, s/veh		192.0			102.3			100.4			128.0	
Approach LOS		F			F			F			F	

Timer	1	2	3	4	5	6	7	8
Assigned Phs	1	2	3	4	5	6	7	8
Phs Duration (G+Y+Rc), s	28.2	51.8	28.0	52.0	30.0	50.0	25.8	54.2
Change Period (Y+Rc), s	7.0	8.0	6.5	6.5	7.0	8.0	6.5	6.5
Max Green Setting (Gmax), s	23.0	42.0	21.5	45.5	23.0	42.0	21.5	45.5
Max Q Clear Time (g_c+I1), s	21.9	44.6	23.5	47.5	25.0	44.0	19.2	45.4
Green Ext Time (p_c), s	0.4	0.0	0.0	0.0	0.0	0.0	0.1	0.1

Intersection Summary	
HCM 2010 Ctrl Delay	129.1
HCM 2010 LOS	F

Movement	EBL	EBT	EBR	WBL	WBT	WBR	NBL	NBT	NBR	SBL	SBT	SBR
Lane Configurations												
Traffic Volume (veh/h)	0	1670	24	18	1986	0	26	0	47	145	4	123
Future Volume (veh/h)	0	1670	24	18	1986	0	26	0	47	145	4	123
Number	1	6	16	5	2	12	7	4	14	3	8	18
Initial Q (Qb), veh	0	0	0	0	0	0	0	0	0	0	0	0
Ped-Bike Adj(A_pbT)	1.00		0.97	1.00		1.00	1.00		1.00	1.00		1.00
Parking Bus, Adj	1.00	1.00	1.00	1.00	1.00	1.00	1.00	1.00	1.00	1.00	1.00	1.00
Adj Sat Flow, veh/h/ln	0	1863	1863	1863	1863	0	1900	1863	1900	1863	1863	1900
Adj Flow Rate, veh/h	0	1758	25	19	2091	0	27	0	49	153	4	129
Adj No. of Lanes	0	3	1	1	3	0	0	1	0	1	1	0
Peak Hour Factor	0.95	0.95	0.95	0.95	0.95	0.95	0.95	0.95	0.95	0.95	0.95	0.95
Percent Heavy Veh, %	0	2	2	2	2	0	2	2	2	2	2	2
Cap, veh/h	0	2534	764	201	2797	0	69	0	126	388	10	337
Arrive On Green	0.00	1.00	1.00	0.01	0.55	0.00	0.12	0.00	0.12	0.22	0.22	0.22
Sat Flow, veh/h	0	5253	1534	1774	5253	0	584	0	1060	1774	48	1543
Grp Volume(v), veh/h	0	1758	25	19	2091	0	76	0	0	153	0	133
Grp Sat Flow(s),veh/h/ln	0	1695	1534	1774	1695	0	1643	0	0	1774	0	1591
Q Serve(g_s), s	0.0	0.6	0.0	0.8	50.3	0.0	6.8	0.0	0.0	11.8	0.0	11.4
Cycle Q Clear(g_c), s	0.0	0.6	0.0	0.8	50.3	0.0	6.8	0.0	0.0	11.8	0.0	11.4
Prop In Lane	0.00		1.00	1.00		0.00	0.36		0.64	1.00		0.97
Lane Grp Cap(c), veh/h	0	2534	764	201	2797	0	195	0	0	388	0	348
V/C Ratio(X)	0.00	0.69	0.03	0.09	0.75	0.00	0.39	0.00	0.00	0.39	0.00	0.38
Avail Cap(c_a), veh/h	0	2534	764	309	2797	0	195	0	0	388	0	348
HCM Platoon Ratio	1.00	2.00	2.00	1.00	1.00	1.00	1.00	1.00	1.00	1.00	1.00	1.00
Upstream Filter(I)	0.00	0.09	0.09	1.00	1.00	0.00	1.00	0.00	0.00	1.00	0.00	1.00
Uniform Delay (d), s/veh	0.0	0.1	0.1	18.3	27.5	0.0	65.1	0.0	0.0	53.4	0.0	53.3
Incr Delay (d2), s/veh	0.0	0.1	0.0	0.2	1.9	0.0	5.8	0.0	0.0	3.0	0.0	3.2
Initial Q Delay(d3),s/veh	0.0	0.0	0.0	0.0	0.0	0.0	0.0	0.0	0.0	0.0	0.0	0.0
%ile BackOfQ(95%),veh/ln	0.0	0.2	0.0	0.7	31.9	0.0	6.1	0.0	0.0	10.2	0.0	9.1
LnGrp Delay(d),s/veh	0.0	0.3	0.1	18.5	29.4	0.0	70.9	0.0	0.0	56.4	0.0	56.4
LnGrp LOS		A	A	B	C		E			E		E
Approach Vol, veh/h		1783			2110			76			286	
Approach Delay, s/veh		0.3			29.3			70.9			56.4	
Approach LOS		A			C			E			E	

Timer	1	2	3	4	5	6	7	8
Assigned Phs		2		4	5	6		8
Phs Duration (G+Y+Rc), s		94.0		25.0	8.3	85.7		41.0
Change Period (Y+Rc), s		6.0		6.0	6.0	6.0		6.0
Max Green Setting (Gmax), s		88.0		19.0	12.0	70.0		35.0
Max Q Clear Time (g_c+I1), s		52.3		8.8	2.8	2.6		13.8
Green Ext Time (p_c), s		34.0		0.2	0.0	61.7		1.2

Intersection Summary	
HCM 2010 Ctrl Delay	19.7
HCM 2010 LOS	B

Notes

User approved pedestrian interval to be less than phase max green.

Movement	EBL	EBT	EBR	WBL	WBT	WBR	NBL	NBT	NBR	SBL	SBT	SBR
Lane Configurations												
Traffic Volume (veh/h)	134	1632	97	399	1805	104	146	201	484	0	0	0
Future Volume (veh/h)	134	1632	97	399	1805	104	146	201	484	0	0	0
Number	7	4	14	3	8	18	5	2	12			
Initial Q (Qb), veh	0	0	0	0	0	0	0	0	0			
Ped-Bike Adj(A_pbT)	1.00		0.96	1.00		0.97	1.00		0.98			
Parking Bus, Adj	1.00	1.00	1.00	1.00	1.00	1.00	1.00	1.00	1.00			
Adj Sat Flow, veh/h/ln	1863	1863	1863	1863	1863	1863	1863	1863	1863			
Adj Flow Rate, veh/h	143	1736	103	424	1920	111	155	214	515			
Adj No. of Lanes	1	3	1	2	3	1	1	1	1			
Peak Hour Factor	0.94	0.94	0.94	0.94	0.94	0.94	0.94	0.94	0.94			
Percent Heavy Veh, %	2	2	2	2	2	2	2	2	2			
Cap, veh/h	166	2443	734	344	2475	745	545	572	476			
Arrive On Green	0.09	0.48	0.48	0.10	0.49	0.49	0.31	0.31	0.31			
Sat Flow, veh/h	1774	5085	1527	3442	5085	1531	1774	1863	1551			
Grp Volume(v), veh/h	143	1736	103	424	1920	111	155	214	515			
Grp Sat Flow(s),veh/h/ln	1774	1695	1527	1721	1695	1531	1774	1863	1551			
Q Serve(g_s), s	12.7	43.1	6.0	16.0	49.8	6.4	10.6	14.4	49.1			
Cycle Q Clear(g_c), s	12.7	43.1	6.0	16.0	49.8	6.4	10.6	14.4	49.1			
Prop In Lane	1.00		1.00	1.00		1.00	1.00		1.00			
Lane Grp Cap(c), veh/h	166	2443	734	344	2475	745	545	572	476			
V/C Ratio(X)	0.86	0.71	0.14	1.23	0.78	0.15	0.28	0.37	1.08			
Avail Cap(c_a), veh/h	333	2733	821	344	2475	745	545	572	476			
HCM Platoon Ratio	1.00	1.00	1.00	1.00	1.00	1.00	1.00	1.00	1.00			
Upstream Filter(I)	1.00	1.00	1.00	1.00	1.00	1.00	1.00	1.00	1.00			
Uniform Delay (d), s/veh	71.5	32.8	23.2	72.0	33.9	22.7	42.1	43.4	55.4			
Incr Delay (d2), s/veh	12.1	0.8	0.1	127.2	1.6	0.1	1.3	1.9	64.9			
Initial Q Delay(d3),s/veh	0.0	0.0	0.0	0.0	0.0	0.0	0.0	0.0	0.0			
%ile BackOfQ(95%),veh/ln	11.1	27.6	4.6	24.6	31.6	4.9	9.2	12.3	53.3			
LnGrp Delay(d),s/veh	83.5	33.6	23.2	199.2	35.5	22.8	43.4	45.3	120.4			
LnGrp LOS	F	C	C	F	D	C	D	D	F			
Approach Vol, veh/h		1982			2455			884				
Approach Delay, s/veh		36.6			63.2			88.7				
Approach LOS		D			E			F				

Timer	1	2	3	4	5	6	7	8
Assigned Phs		2	3	4			7	8
Phs Duration (G+Y+Rc), s		55.1	22.0	82.9			21.0	83.9
Change Period (Y+Rc), s		6.0	6.0	6.0			6.0	6.0
Max Green Setting (Gmax), s		40.0	16.0	86.0			30.0	72.0
Max Q Clear Time (g_c+I1), s		51.1	18.0	45.1			14.7	51.8
Green Ext Time (p_c), s		0.0	0.0	31.8			0.3	19.5

Intersection Summary	
HCM 2010 Ctrl Delay	57.5
HCM 2010 LOS	E

Notes

User approved volume balancing among the lanes for turning movement.

Movement	EBL	EBT	EBR	WBL	WBT	WBR	NBL	NBT	NBR	SBL	SBT	SBR
Lane Configurations												
Traffic Volume (veh/h)	208	1788	353	66	1925	55	330	134	90	104	91	157
Future Volume (veh/h)	208	1788	353	66	1925	55	330	134	90	104	91	157
Number	7	4	14	3	8	18	5	2	12	1	6	16
Initial Q (Qb), veh	0	0	0	0	0	0	0	0	0	0	0	0
Ped-Bike Adj(A_pbT)	1.00		0.99	1.00		0.96	1.00		0.99	1.00		0.99
Parking Bus, Adj	1.00	1.00	1.00	1.00	1.00	1.00	1.00	1.00	1.00	1.00	1.00	1.00
Adj Sat Flow, veh/h/ln	1863	1863	1863	1863	1863	1900	1863	1863	1900	1863	1863	1900
Adj Flow Rate, veh/h	226	1943	384	72	2092	60	359	146	98	113	99	171
Adj No. of Lanes	1	3	1	1	3	0	2	1	0	1	1	0
Peak Hour Factor	0.92	0.92	0.92	0.92	0.92	0.92	0.92	0.92	0.92	0.92	0.92	0.92
Percent Heavy Veh, %	2	2	2	2	2	2	2	2	2	2	2	2
Cap, veh/h	166	1934	594	90	1713	49	387	355	239	134	187	323
Arrive On Green	0.09	0.38	0.38	0.05	0.34	0.34	0.11	0.34	0.34	0.08	0.31	0.31
Sat Flow, veh/h	1774	5085	1560	1774	5074	145	3442	1036	695	1774	610	1053
Grp Volume(v), veh/h	226	1943	384	72	1396	756	359	0	244	113	0	270
Grp Sat Flow(s),veh/h/ln	1774	1695	1560	1774	1695	1829	1721	0	1731	1774	0	1663
Q Serve(g_s), s	15.0	60.9	32.4	6.4	54.0	54.0	16.5	0.0	17.2	10.1	0.0	21.5
Cycle Q Clear(g_c), s	15.0	60.9	32.4	6.4	54.0	54.0	16.5	0.0	17.2	10.1	0.0	21.5
Prop In Lane	1.00		1.00	1.00		0.08	1.00		0.40	1.00		0.63
Lane Grp Cap(c), veh/h	166	1934	594	90	1144	617	387	0	594	134	0	509
V/C Ratio(X)	1.36	1.00	0.65	0.80	1.22	1.22	0.93	0.00	0.41	0.84	0.00	0.53
Avail Cap(c_a), veh/h	166	1934	594	166	1144	617	387	0	594	200	0	509
HCM Platoon Ratio	1.00	1.00	1.00	1.00	1.00	1.00	1.00	1.00	1.00	1.00	1.00	1.00
Upstream Filter(I)	1.00	1.00	1.00	1.00	1.00	1.00	1.00	0.00	1.00	1.00	0.00	1.00
Uniform Delay (d), s/veh	72.5	49.6	40.7	75.1	53.0	53.0	70.4	0.0	40.2	73.0	0.0	46.0
Incr Delay (d2), s/veh	195.4	21.6	2.4	14.6	107.0	115.2	28.2	0.0	2.1	18.2	0.0	3.9
Initial Q Delay(d3),s/veh	0.0	0.0	0.0	0.0	0.0	0.0	0.0	0.0	0.0	0.0	0.0	0.0
%ile BackOfQ(95%),veh/ln	29.5	58.2	20.6	6.3	76.1	84.6	14.4	0.0	13.4	9.5	0.0	15.8
LnGrp Delay(d),s/veh	267.9	71.1	43.2	89.7	160.0	168.2	98.5	0.0	42.3	91.3	0.0	49.9
LnGrp LOS	F	F	D	F	F	F	F		D	F		D
Approach Vol, veh/h		2553			2224			603			383	
Approach Delay, s/veh		84.3			160.5			75.8			62.1	
Approach LOS		F			F			E			E	

Timer	1	2	3	4	5	6	7	8
Assigned Phs	1	2	3	4	5	6	7	8
Phs Duration (G+Y+Rc), s	18.1	60.9	14.1	66.9	24.0	55.0	21.0	60.0
Change Period (Y+Rc), s	6.0	6.0	6.0	6.0	6.0	6.0	6.0	6.0
Max Green Setting (Gmax), s	18.0	49.0	15.0	54.0	18.0	49.0	15.0	54.0
Max Q Clear Time (g_c+I1), s	17.1	19.2	8.4	62.9	18.5	23.5	17.0	56.0
Green Ext Time (p_c), s	0.1	3.5	0.1	0.0	0.0	3.4	0.0	0.0

Intersection Summary	
HCM 2010 Ctrl Delay	111.4
HCM 2010 LOS	F

Movement	EBL	EBT	EBR	WBL	WBT	WBR	NBL	NBT	NBR	SBL	SBT	SBR
Lane Configurations												
Traffic Volume (veh/h)	153	104	95	50	113	11	134	1632	12	28	1642	56
Future Volume (veh/h)	153	104	95	50	113	11	134	1632	12	28	1642	56
Number	7	4	14	3	8	18	5	2	12	1	6	16
Initial Q (Qb), veh	0	0	0	0	0	0	0	0	0	0	0	0
Ped-Bike Adj(A_pbT)	0.99		0.98	0.99		0.99	1.00		0.99	1.00		0.99
Parking Bus, Adj	1.00	1.00	1.00	1.00	1.00	1.00	1.00	1.00	1.00	1.00	1.00	1.00
Adj Sat Flow, veh/h/ln	1863	1863	1900	1863	1863	1900	1863	1863	1900	1863	1863	1900
Adj Flow Rate, veh/h	168	114	104	55	124	12	147	1793	13	31	1804	62
Adj No. of Lanes	1	1	0	1	1	0	1	2	0	1	2	0
Peak Hour Factor	0.91	0.91	0.91	0.91	0.91	0.91	0.91	0.91	0.91	0.91	0.91	0.91
Percent Heavy Veh, %	2	2	2	2	2	2	2	2	2	2	2	2
Cap, veh/h	188	161	147	115	303	29	159	2679	19	172	2596	89
Arrive On Green	0.18	0.18	0.18	0.18	0.18	0.18	0.74	0.74	0.74	0.74	0.74	0.74
Sat Flow, veh/h	1238	891	813	1152	1670	162	244	3601	26	259	3491	119
Grp Volume(v), veh/h	168	0	218	55	0	136	147	880	926	31	910	956
Grp Sat Flow(s),veh/h/ln	1238	0	1703	1152	0	1832	244	1770	1858	259	1770	1841
Q Serve(g_s), s	18.5	0.0	19.2	7.5	0.0	10.5	74.7	40.6	40.7	11.1	43.4	44.3
Cycle Q Clear(g_c), s	29.0	0.0	19.2	26.8	0.0	10.5	119.0	40.6	40.7	51.8	43.4	44.3
Prop In Lane	1.00		0.48	1.00		0.09	1.00		0.01	1.00		0.06
Lane Grp Cap(c), veh/h	188	0	309	115	0	332	159	1316	1382	172	1316	1369
V/C Ratio(X)	0.89	0.00	0.71	0.48	0.00	0.41	0.92	0.67	0.67	0.18	0.69	0.70
Avail Cap(c_a), veh/h	188	0	309	115	0	332	159	1316	1382	172	1316	1369
HCM Platoon Ratio	1.00	1.00	1.00	1.00	1.00	1.00	1.00	1.00	1.00	1.00	1.00	1.00
Upstream Filter(I)	1.00	0.00	1.00	1.00	0.00	1.00	1.00	1.00	1.00	1.00	1.00	1.00
Uniform Delay (d), s/veh	72.1	0.0	61.5	74.1	0.0	57.9	51.0	10.5	10.5	23.7	10.8	10.9
Incr Delay (d2), s/veh	37.4	0.0	7.2	3.0	0.0	0.8	53.6	2.7	2.6	2.3	3.0	3.0
Initial Q Delay(d3),s/veh	0.0	0.0	0.0	0.0	0.0	0.0	0.0	0.0	0.0	0.0	0.0	0.0
%ile BackOfQ(95%),veh/ln	14.4	0.0	14.8	4.5	0.0	9.2	13.7	28.0	29.2	1.6	29.8	31.4
LnGrp Delay(d),s/veh	109.5	0.0	68.7	77.1	0.0	58.7	104.6	13.2	13.1	26.0	13.8	13.9
LnGrp LOS	F		E	E		E	F	B	B	C	B	B
Approach Vol, veh/h		386			191			1953			1897	
Approach Delay, s/veh		86.4			64.0			20.0			14.1	
Approach LOS		F			E			B			B	

Timer	1	2	3	4	5	6	7	8
Assigned Phs		2		4		6		8
Phs Duration (G+Y+Rc), s		125.0		35.0		125.0		35.0
Change Period (Y+Rc), s		6.0		6.0		6.0		6.0
Max Green Setting (Gmax), s		119.0		29.0		119.0		29.0
Max Q Clear Time (g_c+I1), s		121.0		31.0		53.8		28.8
Green Ext Time (p_c), s		0.0		0.0		62.1		0.1

Intersection Summary	
HCM 2010 Ctrl Delay	25.1
HCM 2010 LOS	C

Movement	EBL	EBT	EBR	WBL	WBT	WBR	NBL	NBT	NBR	SBL	SBT	SBR
Lane Configurations												
Traffic Volume (veh/h)	167	58	162	117	71	315	133	1854	20	248	2143	14
Future Volume (veh/h)	167	58	162	117	71	315	133	1854	20	248	2143	14
Number	7	4	14	3	8	18	5	2	12	1	6	16
Initial Q (Qb), veh	0	0	0	0	0	0	0	0	0	0	0	0
Ped-Bike Adj(A_pbT)	1.00		0.99	1.00		0.99	1.00		0.99	1.00		0.98
Parking Bus, Adj	1.00	1.00	1.00	1.00	1.00	1.00	1.00	1.00	1.00	1.00	1.00	1.00
Adj Sat Flow, veh/h/ln	1863	1863	1900	1863	1863	1863	1863	1863	1863	1863	1863	1900
Adj Flow Rate, veh/h	176	61	171	123	75	332	140	1952	21	261	2256	15
Adj No. of Lanes	1	1	0	1	1	2	1	3	1	2	3	0
Peak Hour Factor	0.95	0.95	0.95	0.95	0.95	0.95	0.95	0.95	0.95	0.95	0.95	0.95
Percent Heavy Veh, %	2	2	2	2	2	2	2	2	2	2	2	2
Cap, veh/h	304	74	206	266	280	414	161	2173	672	306	2217	15
Arrive On Green	0.17	0.17	0.17	0.15	0.15	0.15	0.09	0.43	0.43	0.09	0.43	0.43
Sat Flow, veh/h	1774	430	1205	1774	1863	2759	1774	5085	1573	3442	5211	35
Grp Volume(v), veh/h	176	0	232	123	75	332	140	1952	21	261	1467	804
Grp Sat Flow(s),veh/h/ln	1774	0	1635	1774	1863	1379	1774	1695	1573	1721	1695	1856
Q Serve(g_s), s	14.6	0.0	21.9	10.1	5.7	18.6	12.5	57.1	1.2	12.0	68.1	68.1
Cycle Q Clear(g_c), s	14.6	0.0	21.9	10.1	5.7	18.6	12.5	57.1	1.2	12.0	68.1	68.1
Prop In Lane	1.00		0.74	1.00		1.00	1.00		1.00	1.00		0.02
Lane Grp Cap(c), veh/h	304	0	280	266	280	414	161	2173	672	306	1442	790
V/C Ratio(X)	0.58	0.00	0.83	0.46	0.27	0.80	0.87	0.90	0.03	0.85	1.02	1.02
Avail Cap(c_a), veh/h	444	0	409	421	442	655	188	2173	672	366	1442	790
HCM Platoon Ratio	1.00	1.00	1.00	1.00	1.00	1.00	1.00	1.00	1.00	1.00	1.00	1.00
Upstream Filter(I)	1.00	0.00	1.00	1.00	1.00	1.00	1.00	1.00	1.00	1.00	1.00	1.00
Uniform Delay (d), s/veh	61.0	0.0	64.0	62.1	60.2	65.7	71.8	42.6	26.6	71.9	46.0	46.0
Incr Delay (d2), s/veh	1.7	0.0	9.0	1.2	0.5	3.8	29.6	6.4	0.1	15.3	28.1	36.7
Initial Q Delay(d3),s/veh	0.0	0.0	0.0	0.0	0.0	0.0	0.0	0.0	0.0	0.0	0.0	0.0
%ile BackOfQ(95%),veh/ln	11.8	0.0	16.0	8.8	5.4	11.8	11.9	36.7	1.0	10.5	67.5	77.3
LnGrp Delay(d),s/veh	62.8	0.0	73.0	63.3	60.7	69.5	101.4	49.0	26.7	87.1	74.0	82.7
LnGrp LOS	E		E	E	E	E	F	D	C	F	F	F
Approach Vol, veh/h		408			530			2113			2532	
Approach Delay, s/veh		68.6			66.8			52.3			78.1	
Approach LOS		E			E			D			E	

Timer	1	2	3	4	5	6	7	8
Assigned Phs	1	2		4	5	6		8
Phs Duration (G+Y+Rc), s	21.2	75.4		33.4	21.5	75.1		30.0
Change Period (Y+Rc), s	7.0	7.0		6.0	7.0	7.0		6.0
Max Green Setting (Gmax), s	17.0	39.0		40.0	17.0	39.0		38.0
Max Q Clear Time (g_c+I1), s	14.5	59.1		23.9	14.5	70.1		20.6
Green Ext Time (p_c), s	0.3	0.0		1.8	0.1	0.0		2.0

Intersection Summary	
HCM 2010 Ctrl Delay	66.6
HCM 2010 LOS	E

Future (2020) Total SYNCHRO Output

Movement	EBL	EBT	EBR	WBL	WBT	WBR	NBL	NBT	NBR	SBL	SBT	SBR
Lane Configurations												
Traffic Volume (veh/h)	0	1542	37	116	1719	0	0	0	0	239	617	41
Future Volume (veh/h)	0	1542	37	116	1719	0	0	0	0	239	617	41
Number	7	4	14	3	8	18				1	6	16
Initial Q (Qb), veh	0	0	0	0	0	0				0	0	0
Ped-Bike Adj(A_pbT)	1.00		1.00	1.00		1.00				1.00		1.00
Parking Bus, Adj	1.00	1.00	1.00	1.00	1.00	1.00				1.00	1.00	1.00
Adj Sat Flow, veh/h/ln	0	1863	1900	1863	1863	0				1900	1863	1900
Adj Flow Rate, veh/h	0	1623	39	122	1809	0				252	649	43
Adj No. of Lanes	0	3	0	1	3	0				0	4	0
Peak Hour Factor	0.95	0.95	0.95	0.95	0.95	0.95				0.95	0.95	0.95
Percent Heavy Veh, %	0	2	2	2	2	0				0	2	0
Cap, veh/h	0	2371	57	144	2931	0				591	1685	111
Arrive On Green	0.00	0.46	0.46	0.16	1.00	0.00				0.35	0.35	0.35
Sat Flow, veh/h	0	5276	123	1774	5253	0				1681	4792	316
Grp Volume(v), veh/h	0	1077	585	122	1809	0				267	432	245
Grp Sat Flow(s),veh/h/ln	0	1695	1841	1774	1695	0				1779	1602	1807
Q Serve(g_s), s	0.0	39.9	39.9	10.7	0.0	0.0				18.3	16.2	16.3
Cycle Q Clear(g_c), s	0.0	39.9	39.9	10.7	0.0	0.0				18.3	16.2	16.3
Prop In Lane	0.00		0.07	1.00		0.00				0.95		0.18
Lane Grp Cap(c), veh/h	0	1574	854	144	2931	0				626	1127	636
V/C Ratio(X)	0.00	0.68	0.68	0.85	0.62	0.00				0.43	0.38	0.39
Avail Cap(c_a), veh/h	0	1610	874	466	3909	0				626	1127	636
HCM Platoon Ratio	1.00	1.00	1.00	2.00	2.00	1.00				1.00	1.00	1.00
Upstream Filter(I)	0.00	1.00	1.00	0.91	0.91	0.00				1.00	1.00	1.00
Uniform Delay (d), s/veh	0.0	33.7	33.7	66.1	0.0	0.0				39.5	38.9	38.9
Incr Delay (d2), s/veh	0.0	1.2	2.2	11.8	0.2	0.0				2.1	1.0	1.8
Initial Q Delay(d3),s/veh	0.0	0.0	0.0	0.0	0.0	0.0				0.0	0.0	0.0
%ile BackOfQ(95%),veh/ln	0.0	26.1	28.3	9.4	0.1	0.0				14.3	11.7	13.2
LnGrp Delay(d),s/veh	0.0	34.8	35.8	77.9	0.2	0.0				41.7	39.8	40.7
LnGrp LOS		C	D	E	A					D	D	D
Approach Vol, veh/h		1662			1931						944	
Approach Delay, s/veh		35.2			5.1						40.6	
Approach LOS		D			A						D	

Timer	1	2	3	4	5	6	7	8
Assigned Phs			3	4		6		8
Phs Duration (G+Y+Rc), s			18.0	79.3		62.8		97.2
Change Period (Y+Rc), s			5.0	5.0		6.5		5.0
Max Green Setting (Gmax), s			42.0	76.0		25.5		123.0
Max Q Clear Time (g_c+I1), s			12.7	41.9		20.3		2.0
Green Ext Time (p_c), s			0.3	31.1		2.6		90.2

Intersection Summary	
HCM 2010 Ctrl Delay	23.5
HCM 2010 LOS	C

Movement	EBL	EBT	EBR	WBL	WBT	WBR	NBL	NBT	NBR	SBL	SBT	SBR
Lane Configurations												
Traffic Volume (veh/h)	32	1734	0	0	1642	29	188	143	72	0	0	0
Future Volume (veh/h)	32	1734	0	0	1642	29	188	143	72	0	0	0
Number	7	4	14	3	8	18	5	2	12			
Initial Q (Qb), veh	0	0	0	0	0	0	0	0	0			
Ped-Bike Adj(A_pbT)	1.00		1.00	1.00		0.99	1.00		1.00			
Parking Bus, Adj	1.00	1.00	1.00	1.00	1.00	1.00	1.00	1.00	1.00			
Adj Sat Flow, veh/h/ln	1863	1863	0	0	1863	1900	1863	1863	1863			
Adj Flow Rate, veh/h	34	1825	0	0	1728	31	198	151	76			
Adj No. of Lanes	1	2	0	0	4	0	1	1	1			
Peak Hour Factor	0.95	0.95	0.95	0.95	0.95	0.95	0.95	0.95	0.95			
Percent Heavy Veh, %	2	2	0	0	2	2	2	2	2			
Cap, veh/h	44	2002	0	0	3326	60	649	681	577			
Arrive On Green	0.05	1.00	0.00	0.00	0.51	0.51	0.37	0.37	0.37			
Sat Flow, veh/h	1774	3632	0	0	6790	117	1774	1863	1577			
Grp Volume(v), veh/h	34	1825	0	0	1272	487	198	151	76			
Grp Sat Flow(s),veh/h/ln	1774	1770	0	0	1602	1840	1774	1863	1577			
Q Serve(g_s), s	3.0	0.0	0.0	0.0	28.3	28.3	12.7	9.0	5.1			
Cycle Q Clear(g_c), s	3.0	0.0	0.0	0.0	28.3	28.3	12.7	9.0	5.1			
Prop In Lane	1.00		0.00	0.00		0.06	1.00		1.00			
Lane Grp Cap(c), veh/h	44	2002	0	0	2448	937	649	681	577			
V/C Ratio(X)	0.77	0.91	0.00	0.00	0.52	0.52	0.31	0.22	0.13			
Avail Cap(c_a), veh/h	521	2743	0	0	2448	937	649	681	577			
HCM Platoon Ratio	2.00	2.00	1.00	1.00	1.00	1.00	1.00	1.00	1.00			
Upstream Filter(I)	0.57	0.57	0.00	0.00	1.00	1.00	1.00	1.00	1.00			
Uniform Delay (d), s/veh	75.6	0.0	0.0	0.0	26.2	26.2	36.2	35.0	33.8			
Incr Delay (d2), s/veh	14.7	2.4	0.0	0.0	0.2	0.5	1.2	0.8	0.5			
Initial Q Delay(d3),s/veh	0.0	0.0	0.0	0.0	0.0	0.0	0.0	0.0	0.0			
%ile BackOfQ(95%),veh/ln	3.0	1.2	0.0	0.0	18.3	20.7	10.7	8.3	4.2			
LnGrp Delay(d),s/veh	90.3	2.4	0.0	0.0	26.4	26.7	37.4	35.8	34.3			
LnGrp LOS	F	A			C	C	D	D	C			
Approach Vol, veh/h		1859			1759			425				
Approach Delay, s/veh		4.0			26.5			36.3				
Approach LOS		A			C			D				

Timer	1	2	3	4	5	6	7	8
Assigned Phs		2		4			7	8
Phs Duration (G+Y+Rc), s		64.5		95.5			9.0	86.5
Change Period (Y+Rc), s		6.0		5.0			5.0	5.0
Max Green Setting (Gmax), s		25.0		124.0			47.0	72.0
Max Q Clear Time (g_c+I1), s		14.7		2.0			5.0	30.3
Green Ext Time (p_c), s		1.3		88.5			0.1	38.3

Intersection Summary	
HCM 2010 Ctrl Delay	17.2
HCM 2010 LOS	B

Movement	EBL	EBT	EBR	WBL	WBT	WBR	NBL	NBT	NBR	SBL	SBT	SBR
Lane Configurations												
Traffic Volume (veh/h)	188	1010	497	604	1088	116	315	854	352	482	1241	45
Future Volume (veh/h)	188	1010	497	604	1088	116	315	854	352	482	1241	45
Number	7	4	14	3	8	18	5	2	12	1	6	16
Initial Q (Qb), veh	0	0	0	0	0	0	0	0	0	0	0	0
Ped-Bike Adj(A_pbT)	1.00		0.99	1.00		0.99	1.00		0.99	1.00		1.00
Parking Bus, Adj	1.00	1.00	1.00	1.00	1.00	1.00	1.00	1.00	1.00	1.00	1.00	1.00
Adj Sat Flow, veh/h/ln	1863	1863	1900	1863	1863	1900	1863	1863	1863	1863	1863	1900
Adj Flow Rate, veh/h	198	1063	523	636	1145	122	332	899	371	507	1306	47
Adj No. of Lanes	1	3	0	2	3	0	2	3	1	2	3	0
Peak Hour Factor	0.95	0.95	0.95	0.95	0.95	0.95	0.95	0.95	0.95	0.95	0.95	0.95
Percent Heavy Veh, %	2	2	2	2	2	2	2	2	2	2	2	2
Cap, veh/h	219	922	426	570	1465	156	379	1303	402	452	1397	50
Arrive On Green	0.12	0.27	0.27	0.11	0.21	0.21	0.11	0.26	0.26	0.13	0.28	0.28
Sat Flow, veh/h	1774	3390	1568	3442	4663	496	3442	5085	1570	3442	5039	181
Grp Volume(v), veh/h	198	1063	523	636	832	435	332	899	371	507	879	474
Grp Sat Flow(s),veh/h/ln	1774	1695	1568	1721	1695	1769	1721	1695	1570	1721	1695	1830
Q Serve(g_s), s	17.6	43.5	43.5	26.5	37.1	37.2	15.2	25.6	36.8	21.0	40.5	40.5
Cycle Q Clear(g_c), s	17.6	43.5	43.5	26.5	37.1	37.2	15.2	25.6	36.8	21.0	40.5	40.5
Prop In Lane	1.00		1.00	1.00		0.28	1.00		1.00	1.00		0.10
Lane Grp Cap(c), veh/h	219	922	426	570	1065	556	379	1303	402	452	940	507
V/C Ratio(X)	0.91	1.15	1.23	1.12	0.78	0.78	0.88	0.69	0.92	1.12	0.93	0.93
Avail Cap(c_a), veh/h	238	922	426	570	1065	556	452	1303	402	452	940	507
HCM Platoon Ratio	1.00	1.00	1.00	0.67	0.67	0.67	1.00	1.00	1.00	1.00	1.00	1.00
Upstream Filter(I)	1.00	1.00	1.00	0.76	0.76	0.76	1.00	1.00	1.00	1.00	1.00	1.00
Uniform Delay (d), s/veh	69.2	58.3	58.3	71.1	58.0	58.0	70.1	53.8	57.9	69.5	56.4	56.4
Incr Delay (d2), s/veh	32.7	81.4	121.4	69.4	2.9	5.5	15.3	3.0	29.0	80.2	17.3	26.7
Initial Q Delay(d3),s/veh	0.0	0.0	0.0	0.0	0.0	0.0	0.0	0.0	0.0	0.0	0.0	0.0
%ile BackOfQ(95%),veh/ln	16.0	55.4	59.8	32.6	23.9	25.3	12.7	18.1	26.4	27.0	28.7	32.2
LnGrp Delay(d),s/veh	101.9	139.7	179.7	140.5	60.9	63.5	85.4	56.8	86.9	149.7	73.7	83.1
LnGrp LOS	F	F	F	F	E	E	F	E	F	F	E	F
Approach Vol, veh/h		1784			1903			1602			1860	
Approach Delay, s/veh		147.2			88.1			69.7			96.8	
Approach LOS		F			F			E			F	

Timer	1	2	3	4	5	6	7	8
Assigned Phs	1	2	3	4	5	6	7	8
Phs Duration (G+Y+Rc), s	28.0	49.0	33.0	50.0	24.6	52.4	26.2	56.8
Change Period (Y+Rc), s	7.0	8.0	6.5	6.5	7.0	8.0	6.5	6.5
Max Green Setting (Gmax), s	21.0	41.0	26.5	43.5	21.0	41.0	21.5	48.5
Max Q Clear Time (g_c+I1), s	23.0	38.8	28.5	45.5	17.2	42.5	19.6	39.2
Green Ext Time (p_c), s	0.0	2.1	0.0	0.0	0.4	0.0	0.1	8.7

Intersection Summary	
HCM 2010 Ctrl Delay	101.0
HCM 2010 LOS	F

Movement	EBL	EBT	EBR	WBL	WBT	WBR	NBL	NBT	NBR	SBL	SBT	SBR
Lane Configurations												
Traffic Volume (veh/h)	0	1798	22	21	1572	0	13	0	26	175	0	188
Future Volume (veh/h)	0	1798	22	21	1572	0	13	0	26	175	0	188
Number	1	6	16	5	2	12	7	4	14	3	8	18
Initial Q (Qb), veh	0	0	0	0	0	0	0	0	0	0	0	0
Ped-Bike Adj(A_pbT)	1.00		0.98	1.00		1.00	1.00		1.00	1.00		1.00
Parking Bus, Adj	1.00	1.00	1.00	1.00	1.00	1.00	1.00	1.00	1.00	1.00	1.00	1.00
Adj Sat Flow, veh/h/ln	0	1863	1863	1863	1863	0	1863	1863	1900	1863	1863	1900
Adj Flow Rate, veh/h	0	1954	24	23	1709	0	14	0	28	190	0	204
Adj No. of Lanes	0	3	1	1	3	0	1	1	0	1	1	0
Peak Hour Factor	0.92	0.92	0.92	0.92	0.92	0.92	0.92	0.92	0.92	0.92	0.92	0.92
Percent Heavy Veh, %	0	2	2	2	2	0	2	2	2	2	2	2
Cap, veh/h	0	2525	770	124	2797	0	211	0	188	388	0	346
Arrive On Green	0.00	0.66	0.66	0.02	0.55	0.00	0.12	0.00	0.12	0.22	0.00	0.22
Sat Flow, veh/h	0	5253	1551	1774	5253	0	1774	0	1583	1774	0	1583
Grp Volume(v), veh/h	0	1954	24	23	1709	0	14	0	28	190	0	204
Grp Sat Flow(s),veh/h/ln	0	1695	1551	1774	1695	0	1774	0	1583	1774	0	1583
Q Serve(g_s), s	0.0	42.7	0.9	1.0	36.4	0.0	1.1	0.0	2.5	15.0	0.0	18.5
Cycle Q Clear(g_c), s	0.0	42.7	0.9	1.0	36.4	0.0	1.1	0.0	2.5	15.0	0.0	18.5
Prop In Lane	0.00		1.00	1.00		0.00	1.00		1.00	1.00		1.00
Lane Grp Cap(c), veh/h	0	2525	770	124	2797	0	211	0	188	388	0	346
V/C Ratio(X)	0.00	0.77	0.03	0.19	0.61	0.00	0.07	0.00	0.15	0.49	0.00	0.59
Avail Cap(c_a), veh/h	0	2525	770	228	2797	0	211	0	188	388	0	346
HCM Platoon Ratio	1.00	1.33	1.33	1.00	1.00	1.00	1.00	1.00	1.00	1.00	1.00	1.00
Upstream Filter(I)	0.00	0.09	0.09	1.00	1.00	0.00	1.00	0.00	1.00	1.00	0.00	1.00
Uniform Delay (d), s/veh	0.0	20.9	13.8	25.3	24.4	0.0	62.6	0.0	63.2	54.7	0.0	56.0
Incr Delay (d2), s/veh	0.0	0.2	0.0	0.7	1.0	0.0	0.6	0.0	1.7	4.4	0.0	7.2
Initial Q Delay(d3),s/veh	0.0	0.0	0.0	0.0	0.0	0.0	0.0	0.0	0.0	0.0	0.0	0.0
%ile BackOfQ(95%),veh/ln	0.0	22.0	0.7	0.9	24.0	0.0	1.1	0.0	2.2	12.4	0.0	13.7
LnGrp Delay(d),s/veh	0.0	21.2	13.8	26.0	25.4	0.0	63.2	0.0	64.9	59.1	0.0	63.2
LnGrp LOS		C	B	C	C		E		E	E		E
Approach Vol, veh/h		1978			1732			42			394	
Approach Delay, s/veh		21.1			25.4			64.4			61.2	
Approach LOS		C			C			E			E	

Timer	1	2	3	4	5	6	7	8
Assigned Phs		2		4	5	6		8
Phs Duration (G+Y+Rc), s		94.0		25.0	8.6	85.4		41.0
Change Period (Y+Rc), s		6.0		6.0	6.0	6.0		6.0
Max Green Setting (Gmax), s		88.0		19.0	12.0	70.0		35.0
Max Q Clear Time (g_c+I1), s		38.4		4.5	3.0	44.7		20.5
Green Ext Time (p_c), s		45.4		0.1	0.0	24.1		1.6

Intersection Summary	
HCM 2010 Ctrl Delay	27.1
HCM 2010 LOS	C

Notes

User approved pedestrian interval to be less than phase max green.

Movement	EBL	EBT	EBR	WBL	WBT	WBR	NBL	NBT	NBR	SBL	SBT	SBR
Lane Configurations												
Traffic Volume (veh/h)	84	1769	70	226	1494	62	72	17	207	0	0	0
Future Volume (veh/h)	84	1769	70	226	1494	62	72	17	207	0	0	0
Number	7	4	14	3	8	18	5	2	12			
Initial Q (Qb), veh	0	0	0	0	0	0	0	0	0			
Ped-Bike Adj(A_pbT)	1.00		0.99	1.00		0.99	1.00		1.00			
Parking Bus, Adj	1.00	1.00	1.00	1.00	1.00	1.00	1.00	1.00	1.00			
Adj Sat Flow, veh/h/ln	1863	1863	1863	1863	1863	1863	1863	1863	1863			
Adj Flow Rate, veh/h	88	1862	74	238	1573	65	47	59	218			
Adj No. of Lanes	1	3	1	2	3	1	1	1	1			
Peak Hour Factor	0.95	0.95	0.95	0.95	0.95	0.95	0.95	0.95	0.95			
Percent Heavy Veh, %	2	2	2	2	2	2	2	2	2			
Cap, veh/h	109	2516	772	283	2623	808	551	579	491			
Arrive On Green	0.06	0.49	0.49	0.08	0.52	0.52	0.31	0.31	0.31			
Sat Flow, veh/h	1774	5085	1561	3442	5085	1566	1774	1863	1582			
Grp Volume(v), veh/h	88	1862	74	238	1573	65	47	59	218			
Grp Sat Flow(s),veh/h/ln	1774	1695	1561	1721	1695	1566	1774	1863	1582			
Q Serve(g_s), s	7.8	46.7	4.0	10.9	34.7	3.4	3.0	3.6	17.6			
Cycle Q Clear(g_c), s	7.8	46.7	4.0	10.9	34.7	3.4	3.0	3.6	17.6			
Prop In Lane	1.00		1.00	1.00		1.00	1.00		1.00			
Lane Grp Cap(c), veh/h	109	2516	772	283	2623	808	551	579	491			
V/C Ratio(X)	0.81	0.74	0.10	0.84	0.60	0.08	0.09	0.10	0.44			
Avail Cap(c_a), veh/h	266	2733	839	344	2623	808	551	579	491			
HCM Platoon Ratio	1.00	1.00	1.00	1.00	1.00	1.00	1.00	1.00	1.00			
Upstream Filter(I)	1.00	1.00	1.00	1.00	1.00	1.00	1.00	1.00	1.00			
Uniform Delay (d), s/veh	74.2	32.2	21.4	72.4	27.2	19.6	39.1	39.3	44.1			
Incr Delay (d2), s/veh	13.3	1.0	0.1	14.5	0.4	0.0	0.3	0.4	2.9			
Initial Q Delay(d3),s/veh	0.0	0.0	0.0	0.0	0.0	0.0	0.0	0.0	0.0			
%ile BackOfQ(95%),veh/ln	7.6	29.8	3.1	9.7	22.9	2.6	2.7	3.4	12.8			
LnGrp Delay(d),s/veh	87.5	33.2	21.5	86.9	27.5	19.6	39.4	39.6	47.0			
LnGrp LOS	F	C	C	F	C	B	D	D	D			
Approach Vol, veh/h		2024			1876			324				
Approach Delay, s/veh		35.2			34.8			44.5				
Approach LOS		D			C			D				

Timer	1	2	3	4	5	6	7	8
Assigned Phs		2	3	4			7	8
Phs Duration (G+Y+Rc), s		55.7	19.1	85.2			15.8	88.5
Change Period (Y+Rc), s		6.0	6.0	6.0			6.0	6.0
Max Green Setting (Gmax), s		40.0	16.0	86.0			24.0	78.0
Max Q Clear Time (g_c+I1), s		19.6	12.9	48.7			9.8	36.7
Green Ext Time (p_c), s		1.1	0.2	30.5			0.2	37.5

Intersection Summary	
HCM 2010 Ctrl Delay	35.7
HCM 2010 LOS	D

Notes

User approved volume balancing among the lanes for turning movement.

Movement	EBL	EBT	EBR	WBL	WBT	WBR	NBL	NBT	NBR	SBL	SBT	SBR
Lane Configurations												
Traffic Volume (veh/h)	146	1434	230	47	1465	33	252	50	26	88	78	150
Future Volume (veh/h)	146	1434	230	47	1465	33	252	50	26	88	78	150
Number	7	4	14	3	8	18	5	2	12	1	6	16
Initial Q (Qb), veh	0	0	0	0	0	0	0	0	0	0	0	0
Ped-Bike Adj(A_pbT)	1.00		0.99	1.00		0.95	1.00		0.99	1.00		0.99
Parking Bus, Adj	1.00	1.00	1.00	1.00	1.00	1.00	1.00	1.00	1.00	1.00	1.00	1.00
Adj Sat Flow, veh/h/ln	1863	1863	1863	1863	1863	1900	1863	1863	1900	1863	1863	1900
Adj Flow Rate, veh/h	159	1559	250	51	1592	36	274	54	28	96	85	163
Adj No. of Lanes	1	3	1	1	3	0	2	1	0	1	1	0
Peak Hour Factor	0.92	0.92	0.92	0.92	0.92	0.92	0.92	0.92	0.92	0.92	0.92	0.92
Percent Heavy Veh, %	2	2	2	2	2	2	2	2	2	2	2	2
Cap, veh/h	144	1911	586	66	1694	38	320	428	222	117	196	375
Arrive On Green	0.08	0.38	0.38	0.04	0.33	0.33	0.09	0.37	0.37	0.07	0.34	0.34
Sat Flow, veh/h	1774	5085	1560	1774	5111	116	3442	1153	598	1774	568	1090
Grp Volume(v), veh/h	159	1559	250	51	1056	572	274	0	82	96	0	248
Grp Sat Flow(s),veh/h/ln	1774	1695	1560	1774	1695	1836	1721	0	1750	1774	0	1658
Q Serve(g_s), s	13.0	44.2	19.1	4.6	48.4	48.4	12.6	0.0	4.9	8.6	0.0	18.4
Cycle Q Clear(g_c), s	13.0	44.2	19.1	4.6	48.4	48.4	12.6	0.0	4.9	8.6	0.0	18.4
Prop In Lane	1.00		1.00	1.00		0.06	1.00		0.34	1.00		0.66
Lane Grp Cap(c), veh/h	144	1911	586	66	1124	609	320	0	650	117	0	571
V/C Ratio(X)	1.10	0.82	0.43	0.78	0.94	0.94	0.86	0.00	0.13	0.82	0.00	0.43
Avail Cap(c_a), veh/h	144	1911	586	144	1187	643	387	0	650	200	0	571
HCM Platoon Ratio	1.00	1.00	1.00	1.00	1.00	1.00	1.00	1.00	1.00	1.00	1.00	1.00
Upstream Filter(I)	1.00	1.00	1.00	1.00	1.00	1.00	1.00	0.00	1.00	1.00	0.00	1.00
Uniform Delay (d), s/veh	73.5	45.0	37.1	76.4	51.9	51.9	71.5	0.0	33.1	73.8	0.0	40.4
Incr Delay (d2), s/veh	105.3	2.9	0.5	17.7	13.7	21.4	14.8	0.0	0.4	13.3	0.0	2.4
Initial Q Delay(d3),s/veh	0.0	0.0	0.0	0.0	0.0	0.0	0.0	0.0	0.0	0.0	0.0	0.0
%ile BackOfQ(95%),veh/ln	19.0	28.7	13.0	4.6	32.9	36.8	10.9	0.0	4.4	8.1	0.0	13.7
LnGrp Delay(d),s/veh	178.8	47.8	37.6	94.0	65.7	73.3	86.3	0.0	33.5	87.2	0.0	42.8
LnGrp LOS	F	D	D	F	E	E	F		C	F		D
Approach Vol, veh/h		1968			1679			356			344	
Approach Delay, s/veh		57.1			69.1			74.2			55.2	
Approach LOS		E			E			E			E	

Timer	1	2	3	4	5	6	7	8
Assigned Phs	1	2	3	4	5	6	7	8
Phs Duration (G+Y+Rc), s	16.5	65.5	11.9	66.1	20.9	61.1	19.0	59.0
Change Period (Y+Rc), s	6.0	6.0	6.0	6.0	6.0	6.0	6.0	6.0
Max Green Setting (Gmax), s	18.0	49.0	13.0	56.0	18.0	49.0	13.0	56.0
Max Q Clear Time (g_c+I1), s	10.6	6.9	6.6	46.2	14.6	20.4	15.0	50.4
Green Ext Time (p_c), s	0.1	2.3	0.0	9.5	0.3	2.2	0.0	2.6

Intersection Summary	
HCM 2010 Ctrl Delay	63.0
HCM 2010 LOS	E

Movement	EBL	EBT	EBR	WBL	WBT	WBR	NBL	NBT	NBR	SBL	SBT	SBR
Lane Configurations												
Traffic Volume (veh/h)	126	73	94	47	52	15	73	1133	5	27	1532	50
Future Volume (veh/h)	126	73	94	47	52	15	73	1133	5	27	1532	50
Number	7	4	14	3	8	18	5	2	12	1	6	16
Initial Q (Qb), veh	0	0	0	0	0	0	0	0	0	0	0	0
Ped-Bike Adj(A_pbT)	0.99		0.98	0.99		0.99	1.00		0.99	1.00		0.99
Parking Bus, Adj	1.00	1.00	1.00	1.00	1.00	1.00	1.00	1.00	1.00	1.00	1.00	1.00
Adj Sat Flow, veh/h/ln	1863	1863	1900	1863	1863	1900	1863	1863	1900	1863	1863	1900
Adj Flow Rate, veh/h	135	78	101	51	56	16	78	1218	5	29	1647	54
Adj No. of Lanes	1	1	0	1	1	0	1	2	0	1	2	0
Peak Hour Factor	0.93	0.93	0.93	0.93	0.93	0.93	0.93	0.93	0.93	0.93	0.93	0.93
Percent Heavy Veh, %	2	2	2	2	2	2	2	2	2	2	2	2
Cap, veh/h	209	117	152	116	223	64	204	2764	11	338	2674	87
Arrive On Green	0.16	0.16	0.16	0.16	0.16	0.16	0.76	0.76	0.76	0.76	0.76	0.76
Sat Flow, veh/h	1307	730	945	1189	1389	397	287	3615	15	454	3497	114
Grp Volume(v), veh/h	135	0	179	51	0	72	78	596	627	29	831	870
Grp Sat Flow(s),veh/h/ln	1307	0	1675	1189	0	1786	287	1770	1860	454	1770	1842
Q Serve(g_s), s	16.1	0.0	16.1	6.7	0.0	5.6	26.6	19.1	19.1	3.9	33.3	33.7
Cycle Q Clear(g_c), s	21.8	0.0	16.1	22.8	0.0	5.6	60.4	19.1	19.1	23.0	33.3	33.7
Prop In Lane	1.00		0.56	1.00		0.22	1.00		0.01	1.00		0.06
Lane Grp Cap(c), veh/h	209	0	269	116	0	286	204	1353	1422	338	1353	1408
V/C Ratio(X)	0.65	0.00	0.67	0.44	0.00	0.25	0.38	0.44	0.44	0.09	0.61	0.62
Avail Cap(c_a), veh/h	236	0	304	141	0	324	204	1353	1422	338	1353	1408
HCM Platoon Ratio	1.00	1.00	1.00	1.00	1.00	1.00	1.00	1.00	1.00	1.00	1.00	1.00
Upstream Filter(I)	1.00	0.00	1.00	1.00	0.00	1.00	1.00	1.00	1.00	1.00	1.00	1.00
Uniform Delay (d), s/veh	68.3	0.0	63.1	73.9	0.0	58.8	21.9	6.7	6.7	10.8	8.4	8.4
Incr Delay (d2), s/veh	5.1	0.0	4.6	2.6	0.0	0.5	5.4	1.0	1.0	0.5	2.1	2.0
Initial Q Delay(d3),s/veh	0.0	0.0	0.0	0.0	0.0	0.0	0.0	0.0	0.0	0.0	0.0	0.0
%ile BackOfQ(95%),veh/ln	10.2	0.0	12.4	4.2	0.0	5.1	4.3	14.8	15.4	1.0	23.7	24.6
LnGrp Delay(d),s/veh	73.4	0.0	67.8	76.5	0.0	59.2	27.2	7.7	7.7	11.3	10.4	10.4
LnGrp LOS	E		E	E		E	C	A	A	B	B	B
Approach Vol, veh/h		314			123			1301			1730	
Approach Delay, s/veh		70.2			66.4			8.9			10.5	
Approach LOS		E			E			A			B	

Timer	1	2	3	4	5	6	7	8
Assigned Phs		2		4		6		8
Phs Duration (G+Y+Rc), s		128.3		31.7		128.3		31.7
Change Period (Y+Rc), s		6.0		6.0		6.0		6.0
Max Green Setting (Gmax), s		119.0		29.0		119.0		29.0
Max Q Clear Time (g_c+I1), s		62.4		23.8		35.7		24.8
Green Ext Time (p_c), s		46.0		1.0		62.0		0.8

Intersection Summary	
HCM 2010 Ctrl Delay	17.3
HCM 2010 LOS	B

Movement	EBL	EBT	EBR	WBL	WBT	WBR	NBL	NBT	NBR	SBL	SBT	SBR
Lane Configurations												
Traffic Volume (veh/h)	155	110	434	40	9	103	70	1461	25	131	2112	9
Future Volume (veh/h)	155	110	434	40	9	103	70	1461	25	131	2112	9
Number	7	4	14	3	8	18	5	2	12	1	6	16
Initial Q (Qb), veh	0	0	0	0	0	0	0	0	0	0	0	0
Ped-Bike Adj(A_pbT)	1.00		1.00	1.00		0.99	1.00		1.00	1.00		0.99
Parking Bus, Adj	1.00	1.00	1.00	1.00	1.00	1.00	1.00	1.00	1.00	1.00	1.00	1.00
Adj Sat Flow, veh/h/ln	1863	1863	1900	1863	1863	1863	1863	1863	1863	1863	1863	1900
Adj Flow Rate, veh/h	170	121	477	44	10	113	77	1605	27	144	2321	10
Adj No. of Lanes	1	1	0	1	1	2	1	3	1	2	3	0
Peak Hour Factor	0.91	0.91	0.91	0.91	0.91	0.91	0.91	0.91	0.91	0.91	0.91	0.91
Percent Heavy Veh, %	2	2	2	2	2	2	2	2	2	2	2	2
Cap, veh/h	455	84	332	119	125	185	95	2340	725	185	2406	10
Arrive On Green	0.26	0.26	0.26	0.07	0.07	0.07	0.05	0.46	0.46	0.05	0.46	0.46
Sat Flow, veh/h	1774	329	1297	1774	1863	2749	1774	5085	1576	3442	5226	23
Grp Volume(v), veh/h	170	0	598	44	10	113	77	1605	27	144	1505	826
Grp Sat Flow(s),veh/h/ln	1774	0	1627	1774	1863	1375	1774	1695	1576	1721	1695	1859
Q Serve(g_s), s	12.6	0.0	41.0	3.8	0.8	6.4	6.9	39.8	1.5	6.6	68.9	69.0
Cycle Q Clear(g_c), s	12.6	0.0	41.0	3.8	0.8	6.4	6.9	39.8	1.5	6.6	68.9	69.0
Prop In Lane	1.00		0.80	1.00		1.00	1.00		1.00	1.00		0.01
Lane Grp Cap(c), veh/h	455	0	417	119	125	185	95	2340	725	185	1561	856
V/C Ratio(X)	0.37	0.00	1.43	0.37	0.08	0.61	0.81	0.69	0.04	0.78	0.96	0.97
Avail Cap(c_a), veh/h	455	0	417	421	442	653	100	2340	725	194	1561	856
HCM Platoon Ratio	1.00	1.00	1.00	1.00	1.00	1.00	1.00	1.00	1.00	1.00	1.00	1.00
Upstream Filter(I)	1.00	0.00	1.00	1.00	1.00	1.00	1.00	1.00	1.00	1.00	1.00	1.00
Uniform Delay (d), s/veh	48.9	0.0	59.5	71.4	70.0	72.6	74.9	34.1	23.7	74.7	41.9	41.9
Incr Delay (d2), s/veh	0.5	0.0	209.0	1.9	0.3	3.2	36.2	1.7	0.1	17.3	15.8	23.4
Initial Q Delay(d3),s/veh	0.0	0.0	0.0	0.0	0.0	0.0	0.0	0.0	0.0	0.0	0.0	0.0
%ile BackOfQ(95%),veh/ln	10.4	0.0	76.7	3.5	0.8	4.5	7.8	26.1	1.2	6.5	45.4	51.4
LnGrp Delay(d),s/veh	49.5	0.0	268.5	73.3	70.2	75.8	111.1	35.7	23.8	92.1	57.7	65.3
LnGrp LOS	D		F	E	E	E	F	D	C	F	E	E
Approach Vol, veh/h		768			167			1709			2475	
Approach Delay, s/veh		220.0			74.8			38.9			62.2	
Approach LOS		F			E			D			E	

Timer	1	2	3	4	5	6	7	8
Assigned Phs	1	2		4	5	6		8
Phs Duration (G+Y+Rc), s	15.6	80.6		47.0	15.6	80.7		16.8
Change Period (Y+Rc), s	7.0	7.0		6.0	7.0	7.0		6.0
Max Green Setting (Gmax), s	9.0	46.0		41.0	9.0	46.0		38.0
Max Q Clear Time (g_c+I1), s	8.6	41.8		43.0	8.9	71.0		8.4
Green Ext Time (p_c), s	0.0	4.1		0.0	0.0	0.0		0.6

Intersection Summary	
HCM 2010 Ctrl Delay	78.5
HCM 2010 LOS	E

Movement	EBT	EBR	WBL	WBT	NBL	NBR
Lane Configurations						
Traffic Volume (veh/h)	1287	47	24	0	0	42
Future Volume (Veh/h)	1287	47	24	0	0	42
Sign Control	Free			Free	Stop	
Grade	0%			0%	0%	
Peak Hour Factor	0.92	0.92	0.92	0.92	0.92	0.92
Hourly flow rate (vph)	1399	51	26	0	0	46
Pedestrians						
Lane Width (ft)						
Walking Speed (ft/s)						
Percent Blockage						
Right turn flare (veh)						
Median type	None			None		
Median storage veh)						
Upstream signal (ft)						
pX, platoon unblocked						
vC, conflicting volume			1450		1476	492
vC1, stage 1 conf vol						
vC2, stage 2 conf vol						
vCu, unblocked vol			1450		1476	492
tC, single (s)			4.1		6.8	6.9
tC, 2 stage (s)						
tF (s)			2.2		3.5	3.3
p0 queue free %			94		100	91
cM capacity (veh/h)			463		110	523

Direction, Lane #	EB 1	EB 2	EB 3	WB 1	WB 2	WB 3	WB 4	NB 1
Volume Total	560	560	331	26	0	0	0	46
Volume Left	0	0	0	26	0	0	0	0
Volume Right	0	0	51	0	0	0	0	46
cSH	1700	1700	1700	463	1700	1700	1700	523
Volume to Capacity	0.33	0.33	0.19	0.06	0.00	0.00	0.00	0.09
Queue Length 95th (ft)	0	0	0	4	0	0	0	7
Control Delay (s)	0.0	0.0	0.0	13.2	0.0	0.0	0.0	12.6
Lane LOS				B				B
Approach Delay (s)	0.0			13.2				12.6
Approach LOS								B

Intersection Summary			
Average Delay	0.6		
Intersection Capacity Utilization	35.9%	ICU Level of Service	A
Analysis Period (min)	15		

Movement	EBT	EBR	WBL	WBT	NBL	NBR
Lane Configurations						
Traffic Volume (veh/h)	1234	141	0	0	0	127
Future Volume (Veh/h)	1234	141	0	0	0	127
Sign Control	Free			Free	Stop	
Grade	0%			0%	0%	
Peak Hour Factor	0.92	0.92	0.92	0.92	0.92	0.92
Hourly flow rate (vph)	1341	153	0	0	0	138
Pedestrians						
Lane Width (ft)						
Walking Speed (ft/s)						
Percent Blockage						
Right turn flare (veh)						
Median type	None			None		
Median storage veh)						
Upstream signal (ft)						
pX, platoon unblocked						
vC, conflicting volume			1494		1341	447
vC1, stage 1 conf vol						
vC2, stage 2 conf vol						
vCu, unblocked vol			1494		1341	447
tC, single (s)			4.1		6.8	6.9
tC, 2 stage (s)						
tF (s)			2.2		3.5	3.3
p0 queue free %			100		100	76
cM capacity (veh/h)			445		144	564

Direction, Lane #	EB 1	EB 2	EB 3	EB 4	WB 1	WB 2	WB 3	NB 1
Volume Total	447	447	447	153	0	0	0	138
Volume Left	0	0	0	0	0	0	0	0
Volume Right	0	0	0	153	0	0	0	138
cSH	1700	1700	1700	1700	1700	1700	1700	564
Volume to Capacity	0.26	0.26	0.26	0.09	0.00	0.00	0.00	0.24
Queue Length 95th (ft)	0	0	0	0	0	0	0	24
Control Delay (s)	0.0	0.0	0.0	0.0	0.0	0.0	0.0	13.4
Lane LOS								B
Approach Delay (s)	0.0				0.0			13.4
Approach LOS								B

Intersection Summary			
Average Delay	1.1		
Intersection Capacity Utilization	38.4%	ICU Level of Service	A
Analysis Period (min)	15		

Movement	EBL	EBT	EBR	WBL	WBT	WBR	NBL	NBT	NBR	SBL	SBT	SBR
Lane Configurations												
Traffic Volume (veh/h)	0	1573	53	97	2468	0	0	0	0	169	316	79
Future Volume (veh/h)	0	1573	53	97	2468	0	0	0	0	169	316	79
Number	7	4	14	3	8	18				1	6	16
Initial Q (Qb), veh	0	0	0	0	0	0				0	0	0
Ped-Bike Adj(A_pbT)	1.00		1.00	1.00		1.00				1.00		1.00
Parking Bus, Adj	1.00	1.00	1.00	1.00	1.00	1.00				1.00	1.00	1.00
Adj Sat Flow, veh/h/ln	0	1863	1900	1863	1863	0				1900	1863	1900
Adj Flow Rate, veh/h	0	1710	58	105	2683	0				184	343	86
Adj No. of Lanes	0	3	0	1	3	0				0	4	0
Peak Hour Factor	0.92	0.92	0.92	0.92	0.92	0.92				0.92	0.92	0.92
Percent Heavy Veh, %	0	2	2	2	2	0				0	2	0
Cap, veh/h	0	2619	89	126	3157	0				545	1212	293
Arrive On Green	0.00	0.52	0.52	0.14	1.00	0.00				0.31	0.31	0.31
Sat Flow, veh/h	0	5218	171	1774	5253	0				1774	3944	955
Grp Volume(v), veh/h	0	1148	620	105	2683	0				184	276	153
Grp Sat Flow(s),veh/h/ln	0	1695	1832	1774	1695	0				1774	1602	1694
Q Serve(g_s), s	0.0	39.4	39.5	9.2	0.0	0.0				12.8	10.5	11.0
Cycle Q Clear(g_c), s	0.0	39.4	39.5	9.2	0.0	0.0				12.8	10.5	11.0
Prop In Lane	0.00		0.09	1.00		0.00				1.00		0.56
Lane Grp Cap(c), veh/h	0	1758	950	126	3157	0				545	984	521
V/C Ratio(X)	0.00	0.65	0.65	0.83	0.85	0.00				0.34	0.28	0.29
Avail Cap(c_a), veh/h	0	1758	950	521	3719	0				545	984	521
HCM Platoon Ratio	1.00	1.00	1.00	2.00	2.00	1.00				1.00	1.00	1.00
Upstream Filter(I)	0.00	1.00	1.00	0.70	0.70	0.00				1.00	1.00	1.00
Uniform Delay (d), s/veh	0.0	28.0	28.1	67.7	0.0	0.0				42.8	42.0	42.2
Incr Delay (d2), s/veh	0.0	0.9	1.6	9.4	1.2	0.0				1.7	0.7	1.4
Initial Q Delay(d3),s/veh	0.0	0.0	0.0	0.0	0.0	0.0				0.0	0.0	0.0
%ile BackOfQ(95%),veh/ln	0.0	25.8	27.8	7.8	0.7	0.0				10.7	8.3	9.1
LnGrp Delay(d),s/veh	0.0	28.9	29.7	77.1	1.2	0.0				44.5	42.7	43.6
LnGrp LOS		C	C	E	A					D	D	D
Approach Vol, veh/h		1768			2788						613	
Approach Delay, s/veh		29.2			4.1						43.5	
Approach LOS		C			A						D	

Timer	1	2	3	4	5	6	7	8
Assigned Phs			3	4		6		8
Phs Duration (G+Y+Rc), s			16.4	88.0		55.7		104.3
Change Period (Y+Rc), s			5.0	5.0		6.5		5.0
Max Green Setting (Gmax), s			47.0	65.0		31.5		117.0
Max Q Clear Time (g_c+I1), s			11.2	41.5		14.8		2.0
Green Ext Time (p_c), s			0.3	23.2		3.6		97.3

Intersection Summary	
HCM 2010 Ctrl Delay	17.3
HCM 2010 LOS	B

Movement	EBL	EBT	EBR	WBL	WBT	WBR	NBL	NBT	NBR	SBL	SBT	SBR
Lane Configurations												
Traffic Volume (veh/h)	50	1680	0	0	2227	42	336	356	103	0	0	0
Future Volume (veh/h)	50	1680	0	0	2227	42	336	356	103	0	0	0
Number	7	4	14	3	8	18	5	2	12			
Initial Q (Qb), veh	0	0	0	0	0	0	0	0	0			
Ped-Bike Adj(A_pbT)	1.00		1.00	1.00		0.99	1.00		1.00			
Parking Bus, Adj	1.00	1.00	1.00	1.00	1.00	1.00	1.00	1.00	1.00			
Adj Sat Flow, veh/h/ln	1863	1863	0	0	1863	1900	1863	1863	1863			
Adj Flow Rate, veh/h	54	1826	0	0	2421	46	365	387	112			
Adj No. of Lanes	1	2	0	0	4	0	1	1	1			
Peak Hour Factor	0.92	0.92	0.92	0.92	0.92	0.92	0.92	0.92	0.92			
Percent Heavy Veh, %	2	2	0	0	2	2	2	2	2			
Cap, veh/h	70	1941	0	0	3117	59	679	713	604			
Arrive On Green	0.08	1.00	0.00	0.00	0.48	0.48	0.38	0.38	0.38			
Sat Flow, veh/h	1774	3632	0	0	6782	124	1774	1863	1577			
Grp Volume(v), veh/h	54	1826	0	0	1784	683	365	387	112			
Grp Sat Flow(s),veh/h/ln	1774	1770	0	0	1602	1839	1774	1863	1577			
Q Serve(g_s), s	4.8	0.0	0.0	0.0	49.3	49.4	25.6	25.9	7.5			
Cycle Q Clear(g_c), s	4.8	0.0	0.0	0.0	49.3	49.4	25.6	25.9	7.5			
Prop In Lane	1.00		0.00	0.00		0.07	1.00		1.00			
Lane Grp Cap(c), veh/h	70	1941	0	0	2297	879	679	713	604			
V/C Ratio(X)	0.77	0.94	0.00	0.00	0.78	0.78	0.54	0.54	0.19			
Avail Cap(c_a), veh/h	588	2610	0	0	2297	879	679	713	604			
HCM Platoon Ratio	2.00	2.00	1.00	1.00	1.00	1.00	1.00	1.00	1.00			
Upstream Filter(I)	0.79	0.79	0.00	0.00	1.00	1.00	1.00	1.00	1.00			
Uniform Delay (d), s/veh	73.0	0.0	0.0	0.0	34.7	34.7	38.4	38.5	32.8			
Incr Delay (d2), s/veh	13.4	5.1	0.0	0.0	1.7	4.5	3.0	3.0	0.7			
Initial Q Delay(d3),s/veh	0.0	0.0	0.0	0.0	0.0	0.0	0.0	0.0	0.0			
%ile BackOfQ(95%),veh/ln	4.7	2.5	0.0	0.0	29.9	34.5	19.1	20.0	6.1			
LnGrp Delay(d),s/veh	86.4	5.1	0.0	0.0	36.4	39.1	41.4	41.4	33.5			
LnGrp LOS	F	A			D	D	D	D	C			
Approach Vol, veh/h		1880			2467			864				
Approach Delay, s/veh		7.5			37.2			40.4				
Approach LOS		A			D			D				

Timer	1	2	3	4	5	6	7	8
Assigned Phs		2		4			7	8
Phs Duration (G+Y+Rc), s		67.2		92.8			11.3	81.5
Change Period (Y+Rc), s		6.0		5.0			5.0	5.0
Max Green Setting (Gmax), s		31.0		118.0			53.0	60.0
Max Q Clear Time (g_c+I1), s		27.9		2.0			6.8	51.4
Green Ext Time (p_c), s		1.3		85.8			0.1	8.6

Intersection Summary	
HCM 2010 Ctrl Delay	27.0
HCM 2010 LOS	C

Movement	EBL	EBT	EBR	WBL	WBT	WBR	NBL	NBT	NBR	SBL	SBT	SBR
Lane Configurations												
Traffic Volume (veh/h)	183	1108	640	619	1248	187	556	1296	368	415	1400	79
Future Volume (veh/h)	183	1108	640	619	1248	187	556	1296	368	415	1400	79
Number	7	4	14	3	8	18	5	2	12	1	6	16
Initial Q (Qb), veh	0	0	0	0	0	0	0	0	0	0	0	0
Ped-Bike Adj(A_pbT)	1.00		0.99	1.00		0.99	1.00		0.99	1.00		0.99
Parking Bus, Adj	1.00	1.00	1.00	1.00	1.00	1.00	1.00	1.00	1.00	1.00	1.00	1.00
Adj Sat Flow, veh/h/ln	1863	1863	1900	1863	1863	1900	1863	1863	1863	1863	1863	1900
Adj Flow Rate, veh/h	193	1166	674	652	1314	197	585	1364	387	437	1474	83
Adj No. of Lanes	1	3	0	2	3	0	2	3	1	2	3	0
Peak Hour Factor	0.95	0.95	0.95	0.95	0.95	0.95	0.95	0.95	0.95	0.95	0.95	0.95
Percent Heavy Veh, %	2	2	2	2	2	2	2	2	2	2	2	2
Cap, veh/h	214	964	446	462	1329	199	495	1360	419	478	1293	73
Arrive On Green	0.12	0.28	0.28	0.27	0.60	0.60	0.14	0.27	0.27	0.14	0.26	0.26
Sat Flow, veh/h	1774	3390	1570	3442	4457	668	3442	5085	1566	3442	4924	277
Grp Volume(v), veh/h	193	1166	674	652	999	512	585	1364	387	437	1015	542
Grp Sat Flow(s),veh/h/ln	1774	1695	1570	1721	1695	1735	1721	1695	1566	1721	1695	1811
Q Serve(g_s), s	17.2	45.5	45.5	21.5	46.4	46.4	23.0	42.8	38.5	20.0	42.0	42.0
Cycle Q Clear(g_c), s	17.2	45.5	45.5	21.5	46.4	46.4	23.0	42.8	38.5	20.0	42.0	42.0
Prop In Lane	1.00		1.00	1.00		0.39	1.00		1.00	1.00		0.15
Lane Grp Cap(c), veh/h	214	964	446	462	1011	517	495	1360	419	478	890	475
V/C Ratio(X)	0.90	1.21	1.51	1.41	0.99	0.99	1.18	1.00	0.92	0.91	1.14	1.14
Avail Cap(c_a), veh/h	238	964	446	462	1011	517	495	1360	419	495	890	475
HCM Platoon Ratio	1.00	1.00	1.00	2.00	2.00	2.00	1.00	1.00	1.00	1.00	1.00	1.00
Upstream Filter(I)	1.00	1.00	1.00	0.56	0.56	0.56	1.00	1.00	1.00	1.00	1.00	1.00
Uniform Delay (d), s/veh	69.4	57.3	57.3	58.5	32.0	32.0	68.5	58.6	57.0	67.9	59.0	59.0
Incr Delay (d2), s/veh	31.7	104.0	240.7	191.6	18.4	26.7	101.2	25.2	28.6	21.2	76.7	85.8
Initial Q Delay(d3),s/veh	0.0	0.0	0.0	0.0	0.0	0.0	0.0	0.0	0.0	0.0	0.0	0.0
%ile BackOfQ(95%),veh/ln	15.6	63.4	89.2	40.4	29.9	31.9	32.2	41.7	27.4	16.4	52.4	58.2
LnGrp Delay(d),s/veh	101.1	161.3	298.0	250.1	50.4	58.7	169.7	83.8	85.7	89.1	135.7	144.8
LnGrp LOS	F	F	F	F	D	E	F	F	F	F	F	F
Approach Vol, veh/h		2033			2163			2336			1994	
Approach Delay, s/veh		200.9			112.6			105.6			128.0	
Approach LOS		F			F			F			F	

Timer	1	2	3	4	5	6	7	8
Assigned Phs	1	2	3	4	5	6	7	8
Phs Duration (G+Y+Rc), s	29.2	50.8	28.0	52.0	30.0	50.0	25.8	54.2
Change Period (Y+Rc), s	7.0	8.0	6.5	6.5	7.0	8.0	6.5	6.5
Max Green Setting (Gmax), s	23.0	42.0	21.5	45.5	23.0	42.0	21.5	45.5
Max Q Clear Time (g_c+I1), s	22.0	44.8	23.5	47.5	25.0	44.0	19.2	48.4
Green Ext Time (p_c), s	0.2	0.0	0.0	0.0	0.0	0.0	0.1	0.0

Intersection Summary	
HCM 2010 Ctrl Delay	135.3
HCM 2010 LOS	F

Movement	EBL	EBT	EBR	WBL	WBT	WBR	NBL	NBT	NBR	SBL	SBT	SBR
Lane Configurations												
Traffic Volume (veh/h)	0	1750	24	18	2034	0	26	0	47	148	4	123
Future Volume (veh/h)	0	1750	24	18	2034	0	26	0	47	148	4	123
Number	1	6	16	5	2	12	7	4	14	3	8	18
Initial Q (Qb), veh	0	0	0	0	0	0	0	0	0	0	0	0
Ped-Bike Adj(A_pbT)	1.00		0.97	1.00		1.00	1.00		1.00	1.00		1.00
Parking Bus, Adj	1.00	1.00	1.00	1.00	1.00	1.00	1.00	1.00	1.00	1.00	1.00	1.00
Adj Sat Flow, veh/h/ln	0	1863	1863	1863	1863	0	1863	1863	1900	1863	1863	1900
Adj Flow Rate, veh/h	0	1842	25	19	2141	0	27	0	49	156	4	129
Adj No. of Lanes	0	3	1	1	3	0	1	1	0	1	1	0
Peak Hour Factor	0.95	0.95	0.95	0.95	0.95	0.95	0.95	0.95	0.95	0.95	0.95	0.95
Percent Heavy Veh, %	0	2	2	2	2	0	2	2	2	2	2	2
Cap, veh/h	0	2534	764	191	2797	0	211	0	188	388	10	337
Arrive On Green	0.00	1.00	1.00	0.01	0.55	0.00	0.12	0.00	0.12	0.22	0.22	0.22
Sat Flow, veh/h	0	5253	1534	1774	5253	0	1774	0	1579	1774	48	1543
Grp Volume(v), veh/h	0	1842	25	19	2141	0	27	0	49	156	0	133
Grp Sat Flow(s),veh/h/ln	0	1695	1534	1774	1695	0	1774	0	1579	1774	0	1591
Q Serve(g_s), s	0.0	0.7	0.0	0.8	52.4	0.0	2.2	0.0	4.5	12.1	0.0	11.4
Cycle Q Clear(g_c), s	0.0	0.7	0.0	0.8	52.4	0.0	2.2	0.0	4.5	12.1	0.0	11.4
Prop In Lane	0.00		1.00	1.00		0.00	1.00		1.00	1.00		0.97
Lane Grp Cap(c), veh/h	0	2534	764	191	2797	0	211	0	188	388	0	348
V/C Ratio(X)	0.00	0.73	0.03	0.10	0.77	0.00	0.13	0.00	0.26	0.40	0.00	0.38
Avail Cap(c_a), veh/h	0	2534	764	298	2797	0	211	0	188	388	0	348
HCM Platoon Ratio	1.00	2.00	2.00	1.00	1.00	1.00	1.00	1.00	1.00	1.00	1.00	1.00
Upstream Filter(I)	0.00	0.09	0.09	1.00	1.00	0.00	1.00	0.00	1.00	1.00	0.00	1.00
Uniform Delay (d), s/veh	0.0	0.1	0.1	18.3	28.0	0.0	63.1	0.0	64.1	53.5	0.0	53.3
Incr Delay (d2), s/veh	0.0	0.2	0.0	0.2	2.1	0.0	1.3	0.0	3.4	3.1	0.0	3.2
Initial Q Delay(d3),s/veh	0.0	0.0	0.0	0.0	0.0	0.0	0.0	0.0	0.0	0.0	0.0	0.0
%ile BackOfQ(95%),veh/ln	0.0	0.2	0.0	0.7	33.1	0.0	2.1	0.0	3.9	10.3	0.0	9.1
LnGrp Delay(d),s/veh	0.0	0.3	0.1	18.5	30.0	0.0	64.3	0.0	67.5	56.6	0.0	56.4
LnGrp LOS		A	A	B	C		E		E	E		E
Approach Vol, veh/h		1867			2160			76			289	
Approach Delay, s/veh		0.3			29.9			66.4			56.5	
Approach LOS		A			C			E			E	

Timer	1	2	3	4	5	6	7	8
Assigned Phs		2		4	5	6		8
Phs Duration (G+Y+Rc), s		94.0		25.0	8.3	85.7		41.0
Change Period (Y+Rc), s		6.0		6.0	6.0	6.0		6.0
Max Green Setting (Gmax), s		88.0		19.0	12.0	70.0		35.0
Max Q Clear Time (g_c+I1), s		54.4		6.5	2.8	2.7		14.1
Green Ext Time (p_c), s		32.4		0.2	0.0	62.6		1.2

Intersection Summary	
HCM 2010 Ctrl Delay	19.7
HCM 2010 LOS	B

Notes

User approved pedestrian interval to be less than phase max green.

Movement	EBL	EBT	EBR	WBL	WBT	WBR	NBL	NBT	NBR	SBL	SBT	SBR
Lane Configurations												
Traffic Volume (veh/h)	134	1715	97	442	1853	106	146	201	499	0	0	0
Future Volume (veh/h)	134	1715	97	442	1853	106	146	201	499	0	0	0
Number	7	4	14	3	8	18	5	2	12			
Initial Q (Qb), veh	0	0	0	0	0	0	0	0	0			
Ped-Bike Adj(A_pbT)	1.00		0.96	1.00		0.97	1.00		0.98			
Parking Bus, Adj	1.00	1.00	1.00	1.00	1.00	1.00	1.00	1.00	1.00			
Adj Sat Flow, veh/h/ln	1863	1863	1863	1863	1863	1863	1863	1863	1863			
Adj Flow Rate, veh/h	143	1824	103	470	1971	113	155	214	531			
Adj No. of Lanes	1	3	1	2	3	1	1	1	1			
Peak Hour Factor	0.94	0.94	0.94	0.94	0.94	0.94	0.94	0.94	0.94			
Percent Heavy Veh, %	2	2	2	2	2	2	2	2	2			
Cap, veh/h	166	2457	738	344	2489	750	540	567	472			
Arrive On Green	0.09	0.48	0.48	0.10	0.49	0.49	0.30	0.30	0.30			
Sat Flow, veh/h	1774	5085	1528	3442	5085	1532	1774	1863	1551			
Grp Volume(v), veh/h	143	1824	103	470	1971	113	155	214	531			
Grp Sat Flow(s),veh/h/ln	1774	1695	1528	1721	1695	1532	1774	1863	1551			
Q Serve(g_s), s	12.7	46.2	6.0	16.0	51.7	6.5	10.7	14.4	48.7			
Cycle Q Clear(g_c), s	12.7	46.2	6.0	16.0	51.7	6.5	10.7	14.4	48.7			
Prop In Lane	1.00		1.00	1.00		1.00	1.00		1.00			
Lane Grp Cap(c), veh/h	166	2457	738	344	2489	750	540	567	472			
V/C Ratio(X)	0.86	0.74	0.14	1.37	0.79	0.15	0.29	0.38	1.13			
Avail Cap(c_a), veh/h	333	2733	821	344	2489	750	540	567	472			
HCM Platoon Ratio	1.00	1.00	1.00	1.00	1.00	1.00	1.00	1.00	1.00			
Upstream Filter(I)	1.00	1.00	1.00	1.00	1.00	1.00	1.00	1.00	1.00			
Uniform Delay (d), s/veh	71.5	33.3	22.9	72.0	34.0	22.5	42.4	43.7	55.7			
Incr Delay (d2), s/veh	12.1	1.0	0.1	182.2	1.8	0.1	1.3	1.9	80.4			
Initial Q Delay(d3),s/veh	0.0	0.0	0.0	0.0	0.0	0.0	0.0	0.0	0.0			
%ile BackOfQ(95%),veh/ln	11.1	29.5	4.6	29.4	32.6	5.0	9.2	12.3	56.6			
LnGrp Delay(d),s/veh	83.5	34.3	23.0	254.2	35.9	22.6	43.8	45.7	136.1			
LnGrp LOS	F	C	C	F	D	C	D	D	F			
Approach Vol, veh/h		2070			2554			900				
Approach Delay, s/veh		37.2			75.5			98.7				
Approach LOS		D			E			F				

Timer	1	2	3	4	5	6	7	8
Assigned Phs		2	3	4			7	8
Phs Duration (G+Y+Rc), s		54.7	22.0	83.3			21.0	84.3
Change Period (Y+Rc), s		6.0	6.0	6.0			6.0	6.0
Max Green Setting (Gmax), s		40.0	16.0	86.0			30.0	72.0
Max Q Clear Time (g_c+I1), s		50.7	18.0	48.2			14.7	53.7
Green Ext Time (p_c), s		0.0	0.0	29.1			0.3	17.8

Intersection Summary	
HCM 2010 Ctrl Delay	64.9
HCM 2010 LOS	E

Notes

User approved volume balancing among the lanes for turning movement.

Movement	EBL	EBT	EBR	WBL	WBT	WBR	NBL	NBT	NBR	SBL	SBT	SBR
Lane Configurations												
Traffic Volume (veh/h)	245	1811	355	66	1962	55	333	134	90	104	91	169
Future Volume (veh/h)	245	1811	355	66	1962	55	333	134	90	104	91	169
Number	7	4	14	3	8	18	5	2	12	1	6	16
Initial Q (Qb), veh	0	0	0	0	0	0	0	0	0	0	0	0
Ped-Bike Adj(A_pbT)	1.00		0.99	1.00		0.96	1.00		0.99	1.00		0.99
Parking Bus, Adj	1.00	1.00	1.00	1.00	1.00	1.00	1.00	1.00	1.00	1.00	1.00	1.00
Adj Sat Flow, veh/h/ln	1863	1863	1863	1863	1863	1900	1863	1863	1900	1863	1863	1900
Adj Flow Rate, veh/h	266	1968	386	72	2133	60	362	146	98	113	99	184
Adj No. of Lanes	1	3	1	1	3	0	2	1	0	1	1	0
Peak Hour Factor	0.92	0.92	0.92	0.92	0.92	0.92	0.92	0.92	0.92	0.92	0.92	0.92
Percent Heavy Veh, %	2	2	2	2	2	2	2	2	2	2	2	2
Cap, veh/h	166	1934	594	90	1714	48	387	355	239	134	178	330
Arrive On Green	0.09	0.38	0.38	0.05	0.34	0.34	0.11	0.34	0.34	0.08	0.31	0.31
Sat Flow, veh/h	1774	5085	1560	1774	5078	142	3442	1036	695	1774	580	1078
Grp Volume(v), veh/h	266	1968	386	72	1422	771	362	0	244	113	0	283
Grp Sat Flow(s),veh/h/ln	1774	1695	1560	1774	1695	1830	1721	0	1731	1774	0	1659
Q Serve(g_s), s	15.0	60.9	32.6	6.4	54.0	54.0	16.7	0.0	17.2	10.1	0.0	22.8
Cycle Q Clear(g_c), s	15.0	60.9	32.6	6.4	54.0	54.0	16.7	0.0	17.2	10.1	0.0	22.8
Prop In Lane	1.00		1.00	1.00		0.08	1.00		0.40	1.00		0.65
Lane Grp Cap(c), veh/h	166	1934	594	90	1144	618	387	0	594	134	0	508
V/C Ratio(X)	1.60	1.02	0.65	0.80	1.24	1.25	0.93	0.00	0.41	0.84	0.00	0.56
Avail Cap(c_a), veh/h	166	1934	594	166	1144	618	387	0	594	200	0	508
HCM Platoon Ratio	1.00	1.00	1.00	1.00	1.00	1.00	1.00	1.00	1.00	1.00	1.00	1.00
Upstream Filter(I)	1.00	1.00	1.00	1.00	1.00	1.00	1.00	0.00	1.00	1.00	0.00	1.00
Uniform Delay (d), s/veh	72.5	49.6	40.8	75.1	53.0	53.0	70.4	0.0	40.2	73.0	0.0	46.4
Incr Delay (d2), s/veh	296.0	24.9	2.5	14.6	116.8	124.9	29.8	0.0	2.1	18.2	0.0	4.4
Initial Q Delay(d3),s/veh	0.0	0.0	0.0	0.0	0.0	0.0	0.0	0.0	0.0	0.0	0.0	0.0
%ile BackOfQ(95%),veh/ln	37.8	59.3	20.7	6.3	78.9	87.7	14.6	0.0	13.4	9.5	0.0	16.5
LnGrp Delay(d),s/veh	368.5	74.5	43.3	89.7	169.8	177.9	100.2	0.0	42.3	91.3	0.0	50.8
LnGrp LOS	F	F	D	F	F	F	F		D	F		D
Approach Vol, veh/h		2620			2265			606			396	
Approach Delay, s/veh		99.8			170.0			76.9			62.3	
Approach LOS		F			F			E			E	

Timer	1	2	3	4	5	6	7	8
Assigned Phs	1	2	3	4	5	6	7	8
Phs Duration (G+Y+Rc), s	18.1	60.9	14.1	66.9	24.0	55.0	21.0	60.0
Change Period (Y+Rc), s	6.0	6.0	6.0	6.0	6.0	6.0	6.0	6.0
Max Green Setting (Gmax), s	18.0	49.0	15.0	54.0	18.0	49.0	15.0	54.0
Max Q Clear Time (g_c+I1), s	17.1	19.2	8.4	62.9	18.7	24.8	17.0	56.0
Green Ext Time (p_c), s	0.1	3.7	0.1	0.0	0.0	3.5	0.0	0.0

Intersection Summary	
HCM 2010 Ctrl Delay	121.9
HCM 2010 LOS	F

Movement	EBL	EBT	EBR	WBL	WBT	WBR	NBL	NBT	NBR	SBL	SBT	SBR
Lane Configurations												
Traffic Volume (veh/h)	153	104	96	50	113	11	134	1646	12	28	1665	56
Future Volume (veh/h)	153	104	96	50	113	11	134	1646	12	28	1665	56
Number	7	4	14	3	8	18	5	2	12	1	6	16
Initial Q (Qb), veh	0	0	0	0	0	0	0	0	0	0	0	0
Ped-Bike Adj(A_pbT)	0.99		0.98	0.99		0.99	1.00		0.99	1.00		0.99
Parking Bus, Adj	1.00	1.00	1.00	1.00	1.00	1.00	1.00	1.00	1.00	1.00	1.00	1.00
Adj Sat Flow, veh/h/ln	1863	1863	1900	1863	1863	1900	1863	1863	1900	1863	1863	1900
Adj Flow Rate, veh/h	168	114	105	55	124	12	147	1809	13	31	1830	62
Adj No. of Lanes	1	1	0	1	1	0	1	2	0	1	2	0
Peak Hour Factor	0.91	0.91	0.91	0.91	0.91	0.91	0.91	0.91	0.91	0.91	0.91	0.91
Percent Heavy Veh, %	2	2	2	2	2	2	2	2	2	2	2	2
Cap, veh/h	188	161	148	115	303	29	154	2679	19	169	2598	88
Arrive On Green	0.18	0.18	0.18	0.18	0.18	0.18	0.74	0.74	0.74	0.74	0.74	0.74
Sat Flow, veh/h	1238	886	816	1152	1670	162	238	3602	26	255	3493	118
Grp Volume(v), veh/h	168	0	219	55	0	136	147	888	934	31	922	970
Grp Sat Flow(s),veh/h/ln	1238	0	1703	1152	0	1832	238	1770	1858	255	1770	1841
Q Serve(g_s), s	18.5	0.0	19.3	7.5	0.0	10.5	73.4	41.3	41.5	11.4	44.6	45.6
Cycle Q Clear(g_c), s	29.0	0.0	19.3	26.9	0.0	10.5	119.0	41.3	41.5	52.9	44.6	45.6
Prop In Lane	1.00		0.48	1.00		0.09	1.00		0.01	1.00		0.06
Lane Grp Cap(c), veh/h	188	0	309	115	0	332	154	1316	1382	169	1316	1369
V/C Ratio(X)	0.89	0.00	0.71	0.48	0.00	0.41	0.95	0.67	0.68	0.18	0.70	0.71
Avail Cap(c_a), veh/h	188	0	309	115	0	332	154	1316	1382	169	1316	1369
HCM Platoon Ratio	1.00	1.00	1.00	1.00	1.00	1.00	1.00	1.00	1.00	1.00	1.00	1.00
Upstream Filter(I)	1.00	0.00	1.00	1.00	0.00	1.00	1.00	1.00	1.00	1.00	1.00	1.00
Uniform Delay (d), s/veh	72.1	0.0	61.5	74.2	0.0	57.9	52.7	10.5	10.6	24.2	11.0	11.1
Incr Delay (d2), s/veh	37.4	0.0	7.4	3.1	0.0	0.8	60.9	2.8	2.7	2.4	3.1	3.1
Initial Q Delay(d3),s/veh	0.0	0.0	0.0	0.0	0.0	0.0	0.0	0.0	0.0	0.0	0.0	0.0
%ile BackOfQ(95%),veh/ln	14.4	0.0	14.9	4.5	0.0	9.2	14.0	28.5	29.7	1.6	30.5	32.1
LnGrp Delay(d),s/veh	109.5	0.0	68.9	77.3	0.0	58.7	113.6	13.3	13.2	26.6	14.1	14.2
LnGrp LOS	F		E	E		E	F	B	B	C	B	B
Approach Vol, veh/h		387			191			1969			1923	
Approach Delay, s/veh		86.5			64.1			20.8			14.4	
Approach LOS		F			E			C			B	

Timer	1	2	3	4	5	6	7	8
Assigned Phs		2		4		6		8
Phs Duration (G+Y+Rc), s		125.0		35.0		125.0		35.0
Change Period (Y+Rc), s		6.0		6.0		6.0		6.0
Max Green Setting (Gmax), s		119.0		29.0		119.0		29.0
Max Q Clear Time (g_c+I1), s		121.0		31.0		54.9		28.9
Green Ext Time (p_c), s		0.0		0.0		61.4		0.0

Intersection Summary	
HCM 2010 Ctrl Delay	25.6
HCM 2010 LOS	C

Movement	EBL	EBT	EBR	WBL	WBT	WBR	NBL	NBT	NBR	SBL	SBT	SBR
Lane Configurations												
Traffic Volume (veh/h)	170	58	162	126	71	315	133	1869	35	248	2152	16
Future Volume (veh/h)	170	58	162	126	71	315	133	1869	35	248	2152	16
Number	7	4	14	3	8	18	5	2	12	1	6	16
Initial Q (Qb), veh	0	0	0	0	0	0	0	0	0	0	0	0
Ped-Bike Adj(A_pbT)	1.00		0.99	1.00		0.99	1.00		0.99	1.00		0.98
Parking Bus, Adj	1.00	1.00	1.00	1.00	1.00	1.00	1.00	1.00	1.00	1.00	1.00	1.00
Adj Sat Flow, veh/h/ln	1863	1863	1900	1863	1863	1863	1863	1863	1863	1863	1863	1900
Adj Flow Rate, veh/h	179	61	171	133	75	332	140	1967	37	261	2265	17
Adj No. of Lanes	1	1	0	1	1	2	1	3	1	2	3	0
Peak Hour Factor	0.95	0.95	0.95	0.95	0.95	0.95	0.95	0.95	0.95	0.95	0.95	0.95
Percent Heavy Veh, %	2	2	2	2	2	2	2	2	2	2	2	2
Cap, veh/h	304	74	206	267	280	415	161	2172	672	306	2214	17
Arrive On Green	0.17	0.17	0.17	0.15	0.15	0.15	0.09	0.43	0.43	0.09	0.43	0.43
Sat Flow, veh/h	1774	430	1205	1774	1863	2759	1774	5085	1573	3442	5206	39
Grp Volume(v), veh/h	179	0	232	133	75	332	140	1967	37	261	1474	808
Grp Sat Flow(s),veh/h/ln	1774	0	1635	1774	1863	1379	1774	1695	1573	1721	1695	1855
Q Serve(g_s), s	14.9	0.0	21.9	11.0	5.7	18.6	12.5	57.8	2.2	12.0	68.0	68.0
Cycle Q Clear(g_c), s	14.9	0.0	21.9	11.0	5.7	18.6	12.5	57.8	2.2	12.0	68.0	68.0
Prop In Lane	1.00		0.74	1.00		1.00	1.00		1.00	1.00		0.02
Lane Grp Cap(c), veh/h	304	0	280	267	280	415	161	2172	672	306	1442	789
V/C Ratio(X)	0.59	0.00	0.83	0.50	0.27	0.80	0.87	0.91	0.06	0.85	1.02	1.02
Avail Cap(c_a), veh/h	444	0	409	421	442	655	188	2172	672	366	1442	789
HCM Platoon Ratio	1.00	1.00	1.00	1.00	1.00	1.00	1.00	1.00	1.00	1.00	1.00	1.00
Upstream Filter(I)	1.00	0.00	1.00	1.00	1.00	1.00	1.00	1.00	1.00	1.00	1.00	1.00
Uniform Delay (d), s/veh	61.1	0.0	64.0	62.4	60.2	65.7	71.8	42.8	26.9	71.9	46.0	46.0
Incr Delay (d2), s/veh	1.8	0.0	9.0	1.4	0.5	3.8	29.6	6.9	0.2	15.3	29.6	38.3
Initial Q Delay(d3),s/veh	0.0	0.0	0.0	0.0	0.0	0.0	0.0	0.0	0.0	0.0	0.0	0.0
%ile BackOfQ(95%),veh/ln	11.9	0.0	16.0	9.3	5.4	11.8	11.9	37.1	1.8	10.5	68.0	77.8
LnGrp Delay(d),s/veh	62.9	0.0	73.0	63.9	60.7	69.4	101.4	49.7	27.1	87.1	75.6	84.3
LnGrp LOS	E		E	E	E	E	F	D	C	F	F	F
Approach Vol, veh/h		411			540			2144			2543	
Approach Delay, s/veh		68.6			66.8			52.7			79.5	
Approach LOS		E			E			D			E	

Timer	1	2	3	4	5	6	7	8
Assigned Phs	1	2		4	5	6		8
Phs Duration (G+Y+Rc), s	21.2	75.3		33.4	21.5	75.0		30.1
Change Period (Y+Rc), s	7.0	7.0		6.0	7.0	7.0		6.0
Max Green Setting (Gmax), s	17.0	39.0		40.0	17.0	39.0		38.0
Max Q Clear Time (g_c+I1), s	14.5	59.8		23.9	14.5	70.0		20.6
Green Ext Time (p_c), s	0.3	0.0		1.8	0.1	0.0		2.0

Intersection Summary	
HCM 2010 Ctrl Delay	67.3
HCM 2010 LOS	E

Movement	EBT	EBR	WBL	WBT	NBL	NBR
Lane Configurations						
Traffic Volume (veh/h)	1483	51	27	0	0	68
Future Volume (Veh/h)	1483	51	27	0	0	68
Sign Control	Free			Free	Stop	
Grade	0%			0%	0%	
Peak Hour Factor	0.92	0.92	0.92	0.92	0.92	0.92
Hourly flow rate (vph)	1612	55	29	0	0	74
Pedestrians						
Lane Width (ft)						
Walking Speed (ft/s)						
Percent Blockage						
Right turn flare (veh)						
Median type	None			None		
Median storage veh)						
Upstream signal (ft)						
pX, platoon unblocked						
vC, conflicting volume			1667		1698	565
vC1, stage 1 conf vol						
vC2, stage 2 conf vol						
vCu, unblocked vol			1667		1698	565
tC, single (s)			4.1		6.8	6.9
tC, 2 stage (s)						
tF (s)			2.2		3.5	3.3
p0 queue free %			92		100	84
cM capacity (veh/h)			382		77	468

Direction, Lane #	EB 1	EB 2	EB 3	WB 1	WB 2	WB 3	WB 4	NB 1
Volume Total	645	645	377	29	0	0	0	74
Volume Left	0	0	0	29	0	0	0	0
Volume Right	0	0	55	0	0	0	0	74
cSH	1700	1700	1700	382	1700	1700	1700	468
Volume to Capacity	0.38	0.38	0.22	0.08	0.00	0.00	0.00	0.16
Queue Length 95th (ft)	0	0	0	6	0	0	0	14
Control Delay (s)	0.0	0.0	0.0	15.2	0.0	0.0	0.0	14.1
Lane LOS				C				B
Approach Delay (s)	0.0			15.2				14.1
Approach LOS								B

Intersection Summary			
Average Delay	0.8		
Intersection Capacity Utilization	40.7%	ICU Level of Service	A
Analysis Period (min)	15		

Movement	EBT	EBR	WBL	WBT	NBL	NBR
Lane Configurations						
Traffic Volume (veh/h)	1381	155	0	0	0	204
Future Volume (Veh/h)	1381	155	0	0	0	204
Sign Control	Free			Free	Stop	
Grade	0%			0%	0%	
Peak Hour Factor	0.92	0.92	0.92	0.92	0.92	0.92
Hourly flow rate (vph)	1501	168	0	0	0	222
Pedestrians						
Lane Width (ft)						
Walking Speed (ft/s)						
Percent Blockage						
Right turn flare (veh)						
Median type	None			None		
Median storage veh)						
Upstream signal (ft)						
pX, platoon unblocked						
vC, conflicting volume			1669		1501	500
vC1, stage 1 conf vol						
vC2, stage 2 conf vol						
vCu, unblocked vol			1669		1501	500
tC, single (s)			4.1		6.8	*5.0
tC, 2 stage (s)						
tF (s)			2.2		3.5	3.3
p0 queue free %			100		100	67
cM capacity (veh/h)			381		113	679

Direction, Lane #	EB 1	EB 2	EB 3	EB 4	WB 1	WB 2	WB 3	NB 1
Volume Total	500	500	500	168	0	0	0	222
Volume Left	0	0	0	0	0	0	0	0
Volume Right	0	0	0	168	0	0	0	222
cSH	1700	1700	1700	1700	1700	1700	1700	679
Volume to Capacity	0.29	0.29	0.29	0.10	0.00	0.00	0.00	0.33
Queue Length 95th (ft)	0	0	0	0	0	0	0	36
Control Delay (s)	0.0	0.0	0.0	0.0	0.0	0.0	0.0	12.9
Lane LOS								B
Approach Delay (s)	0.0				0.0			12.9
Approach LOS								B

Intersection Summary			
Average Delay	1.5		
Intersection Capacity Utilization	46.0%	ICU Level of Service	A
Analysis Period (min)	15		

* User Entered Value