CONSTRUCTION CONTRACT NO. T4386

COMPONENTS OF CONTRACT PLANS SET

ROADWAY PLANS
SIGNING AND PAVEMENT MARKING PLANS
SIGNALIZATION PLANS
LIGHTING PLANS

A DETAILED INDEX APPEARS ON THE KEY SHEET OF EACH COMPONENT

STATE OF FLORIDA
DEPARTMENT OF TRANSPORTATION

CONTRACT PLANS

FINANCIAL PROJECT IDS 428727-1-52-01 AND 428727-1-52-02

(FEDERAL FUNDS)

BROWARD COUNTY (86030)

STATE ROAD NO. A1A

SOUTH OCEAN DRIVE

FROM COUNTY LINE ROAD TO SEACREST PARKWAY

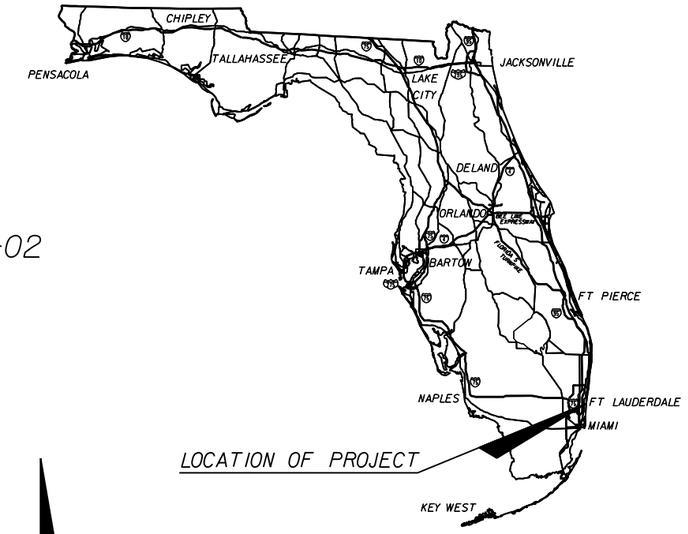

LOCATION OF PROJECT

INDEX OF ROADWAY PLANS

SHEET NO.	SHEET DESCRIPTION
1	KEY SHEET
2 - 6	SUMMARY OF PAY ITEMS
7	TYPICAL SECTION
8 - 9	GENERAL NOTES
10 - 12	SUMMARY OF QUANTITIES
13 - 21	ROADWAY PLAN
22	SPECIAL DETAILS
23 - 25	HARDSCAPE DETAILS
26 - 27	STORM WATER POLLUTION PREVENTION PLAN
28	TEMPORARY TRAFFIC CONTROL NOTES
29 - 30	TEMPORARY TRAFFIC CONTROL PLAN
31 - 40	UTILITY ADJUSTMENTS
UTV-1 - UTV-4	SUMMARY OF VERIFIED UTILITIES
CTL-1 - CTL-3	PROJECT NETWORK CONTROL

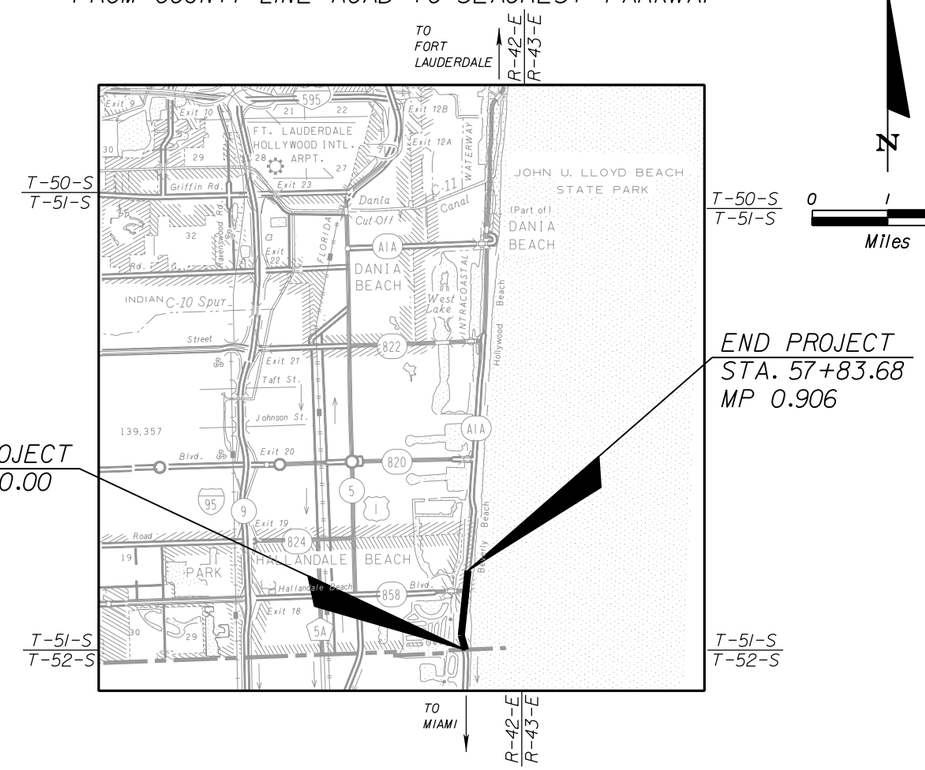

N

0 1 2
Miles

ROADWAY SHOP DRAWINGS TO BE SUBMITTED TO:

EITHEL M. SIERRA, P.E.
APCTE, CORP.
10305 NW 41 STREET, SUITE 115
MIAMI, FLORIDA 33178

PLANS PREPARED BY:

A&P CONSULTING TRANSPORTATION ENGINEERS CORPORATION
10305 N.W. 41 Street, Suite 115
Miami, FL 33178
(305) 592-7283 / fax: (305) 593-1594
Contract No. : C-9495
Vendor No. : 65-0770583
CA No. : EB-0007797

NOTE: THIS PROJECT TO BE LET TO CONTRACT WITH FINANCIAL PROJECT ID 428727-1-52-02 FOR FINANCIAL PURPOSES ONLY AND HAS NO PLAN SET.

NOTE: THE SCALE OF THESE PLANS MAY HAVE CHANGED DUE TO REPRODUCTION.

GOVERNING STANDARDS AND SPECIFICATIONS:

Florida Department of Transportation, 2014 Design Standards and revised Index Drawings as appended herein, and 2014 Standard Specifications for Road and Bridge Construction, as amended by Contract Documents.

For Design Standards click on the "Design Standards" link at the following web site:
http://www.dot.state.fl.us/rddesign/

For Standard Specifications for Road and Bridge Construction click on the "Specifications" link at the following web site:
http://www.dot.state.fl.us/specificationsoffice/

REVISIONS

LENGTH OF PROJECT		
	LINEAR FEET	MILES
ROADWAY	4783.68	0.906
BRIDGES	0.000	0.000
NET LENGTH OF PROJECT	4783.68	0.906
EXCEPTIONS	0.000	0.000
GROSS LENGTH OF PROJECT	4783.68	0.906

FDOT PROJECT MANAGER: FAUSTO GOMEZ, P.E.

KEY SHEET REVISIONS	
DATE	DESCRIPTION

ROADWAY PLANS
ENGINEER OF RECORD: EITHEL M. SIERRA, P.E.

P.E. NO.: 55401

FISCAL YEAR	SHEET NO.
14	1

NOTICE: THE OFFICIAL RECORD OF THIS SHEET IS THE ELECTRONIC FILE SIGNED AND SEALED UNDER RULE 61G15-23.003, F.A.C.

12/05/2013 09:36:31 AM

FLORIDA DEPARTMENT OF TRANSPORTATION
PROPOSAL SUMMARY OF PAY ITEMS
FOR PROPOSAL: T4386

LEAD PROJECT : 428727-1-52-01 | DISTRICT : 04 | COUNTY/SECTION : 86030000

PROJECT(S) : 42872715201, 42872715202 | COUNTY : PALM BEACH

0001 SUMMARY OF ROADWAY

SPC	ALT	ITEM NUMBER	ITEM DESCRIPTION	UNIT	42872715201	42872715202	QUANTITY TOTAL
G		0000-200- 1	ROADWAY DESIGN GROUP- GENERIC PAY ITEM 1	ZZ	615.000	2346.000	2961.000
		0101- 1-	MOBILIZATION 42872715201	LS	1.000		1.000
		0102- 1-	MAINTENANCE OF TRAFFIC 42872715201	(LS)	1.000		1.000
		0102- 14-	TRAFFIC CONTROL OFFICER	MH	76.000		76.000
		0102- 60-	WORK ZONE SIGN	ED	28104.000		28104.000
		0102- 74- 1	TEMPORARY BARRICADE- TYPES I, II, DI, VP, DRUM, OR LCD	ED	44342.000		44342.000
		0102- 74- 2	BARRICADE, TEMPORARY, TYPE III, 6'	ED	3947.000		3947.000
		0102- 76-	ARROW BOARD / ADVANCE WARNING ARROW PANEL	ED	10087.000		10087.000
		0102- 77-	HIGH INTENSITY FLASHING LIGHTS, TEMP, TYPE B	ED	7302.000		7302.000
		0102- 78-	TEMPORARY RETROREFLECTIVE PAVEMENT MARKER	EA	976.000		976.000
		0102- 99-	PORTABLE CHANGEABLE MESSAGE SIGN, TEMPORARY	ED	2491.000		2491.000
		0102-104-	TEMPORARY SIGNALIZATION AND MAINTENANCE, INTERSECTION	ED	4207.000		4207.000
		0102-107- 1	TEMPORARY TRAFFIC DETECTION AND MAINTENANCE, INTERSECTION	ED	4207.000		4207.000
		0104- 10- 3	SEDIMENT BARRIER	LF	8028.000		8028.000
		0104- 11-	FLOATING TURBIDITY BARRIER	LF	189.000		189.000
		0104- 18-	INLET PROTECTION SYSTEM	EA	18.000		18.000
		0107- 1-	LITTER REMOVAL	AC	60.840 N		60.840
		0107- 2-	MOWING	AC	18.940 N		18.940
		0109- 71- 5	FIELD OFFICE,1500 SQ FT	DA	661.000		661.000
		0110- 1- 1	CLEARING & GRUBBING 42872715201	(LS)	1.000		1.000
		0327- 70- 8	MILLING EXIST ASPH PAVT, 2 1/2" AVG DEPTH	SY	41615.000		41615.000
		0334- 1- 13	SUPERPAVE ASPHALTIC CONC, TRAFFIC C	TN	3776.600		3776.600
D		0337- 7- 73	ASPHALT CONCRETE FRICTION COURSE,TRAFFIC C, FC-9.5, PG 76-22, ARB	TN	2403.200		2403.200
		0339- 1-	MISCELLANEOUS ASPHALT PAVEMENT	TN	2.400		2.400
		0425- 5-	MANHOLE, ADJUST	EA	16.000		16.000
T		0431- 1- 1	PIPE LINER, OPTIONAL MATERIAL, 0-24"	LF	90.000		90.000
		0520- 1- 7	CONCRETE CURB & GUTTER, TYPE E	LF	21.000		21.000
		0520- 1- 10	CONCRETE CURB & GUTTER, TYPE F	LF	647.000		647.000
		0522- 1-	CONCRETE SIDEWALK AND DRIVEWAYS, 4" THICK	SY	2336.000		2336.000
		0523- 1-	PATTERNED PAVEMENT, VEHICULAR AREAS	SY		766.000	766.000
		0527- 2-	DETECTABLE WARNINGS	SF	514.000		514.000
		0536- 1- 1	GUARDRAIL -ROADWAY	LF	63.000		63.000
		0536- 85- 24	GUARDRAIL END ANCHORAGE ASSEMBLY- PARALLEL	EA	1.000		1.000
		0536- 85- 25	GUARDRAIL END ANCHORAGE ASSEMBLY- TYPE II	EA	1.000		1.000
		0570- 1- 2	PERFORMANCE TURF, SOD	SY	17.000		17.000
		0710- 11-111	PAINTED PAVEMENT MARKINGS, STANDARD, WHITE, SOLID, 6"	NM	2.824		2.824
		0710- 11-122	PAINTED PAVEMENT MARKINGS, STANDARD, WHITE, SOLID, 8"	LF	2740.000		2740.000
		0710- 11-123	PAINTED PAVEMENT MARKINGS, STANDARD, WHITE, SOLID, 12"	LF	1701.000		1701.000
		0710- 11-124	PAINTED PAVEMENT MARKINGS, STANDARD, WHITE, SOLID, 18"	LF	25.000		25.000
		0710- 11-125	PAINTED PAVEMENT MARKINGS, STANDARD, WHITE, SOLID, 24"	LF	757.000		757.000

NOTICE: THE OFFICIAL RECORD OF THIS SHEET IS THE ELECTRONIC FILE SIGNED AND SEALED UNDER RULE 61G15-23.003, F.A.C.

REVISIONS

DATE	DESCRIPTION	DATE	DESCRIPTION

A&P Consulting Transportation Engineers Corp.
10305 N.W. 41 Street, suite 115
Miami, FL 33178
(305) 592-7283 / fax: (305) 593-1594
CA No. : EB-0007797
Eithel M. Sierra, P.E. No. 55401

STATE OF FLORIDA
DEPARTMENT OF TRANSPORTATION

ROAD NO.	COUNTY	FINANCIAL PROJECT ID
A1A	BROWARD	428727-1-52-01

SUMMARY OF PAY ITEMS

SHEET NO. 2

12/05/2013 09:36:31 AM

FLORIDA DEPARTMENT OF TRANSPORTATION
PROPOSAL SUMMARY OF PAY ITEMS
FOR PROPOSAL: T4386

LEAD PROJECT : 428727-1-52-01 | DISTRICT : 04 | COUNTY/SECTION : 86030000

PROJECT(S) : 42872715201, 42872715202 | COUNTY : PALM BEACH

0001 SUMMARY OF ROADWAY

SPC	ALT	ITEM NUMBER	ITEM DESCRIPTION	UNIT	42872715201	42872715202	QUANTITY TOTAL
		0710- 11-131	PAINTED PAVEMENT MARKINGS, STANDARD, WHITE, SKIP, 6", 10-30 OR 3-9 SKIP	GM	2.074		2.074
		0710- 11-133	PAINTED PAVEME NT MARKING, STANDARD, WHITE, 12" WIDE, 3'-9' SKIP AND APPROACH TO TOLL PLAZA	GM	.132		.132
		0710- 11-151	PAINTED PAVEMENT MARKINGS, STANDARD, WHITE, DOTTED / GUIDELINE/ 6-10 GAP EXTENSION, 6"	LF	716.000		716.000
		0710- 11-160	PAINTED PAVEMENT MARKINGS, STANDARD, WHITE, MESSAGE	EA	50.000		50.000
		0710- 11-170	PAINTED PAVEMENT MARKINGS, STANDARD, WHITE, ARROWS	EA	50.000		50.000
		0710- 11-211	PAINTED PAVEMENT MARKINGS, STANDARD, YELLOW, SOLID, 6"	NM	1.559		1.559
		0710- 11-222	PAINTED PAVEMENT MARKINGS, STANDARD, YELLOW, SOLID, 8"	LF	460.000		460.000
		0710- 11-224	PAINTED PAVEMENT MARKINGS, STANDARD, YELLOW, SOLID, 18"	LF	124.000		124.000
		0999- 25-	INITIAL CONTINGENCY AMOUNT, DO NOT BID 42872715201	LS	1.000 N		1.000

NOTICE: THE OFFICIAL RECORD OF THIS SHEET IS THE ELECTRONIC FILE SIGNED AND SEALED UNDER RULE 61G15-23.003, F.A.C.

12/05/2013 09:36:31 AM

FLORIDA DEPARTMENT OF TRANSPORTATION
PROPOSAL SUMMARY OF PAY ITEMS
FOR PROPOSAL: T4386

LEAD PROJECT : 428727-1-52-01 | DISTRICT : 04 | COUNTY/SECTION : 86030000

PROJECT(S) : 42872715201, 42872715202 | COUNTY : PALM BEACH

0002 SUMMARY OF SIGNING

SPC	ALT	ITEM NUMBER	ITEM DESCRIPTION	UNIT	42872715201	42872715202	QUANTITY TOTAL
		0630- 2- 12	CONDUIT, FURNISH & INSTALL, DIRECTIONAL BORE	LF	274.000		274.000
		0635- 2- 11	PULL & SPLICE BOX, F&I, 13" X 24" COVER SIZE	EA	9.000		9.000
		0635- 2- 13	PULL & SPLICE BOX, F&I, 30" X 60" RECTANGULAR OR 36" ROUND COVER SIZE	EA	3.000		3.000
		0690- 50-	CONTROLLER ASSEMBLY, REMOVE, COMPLETE ASSEMBLY	EA	1.000		1.000
		0700- 1- 11	SINGLE POST SIGN, F&I GROUND MOUNT, UP TO 12 SF	AS	52.000		52.000
		0700- 1- 12	SINGLE POST SIGN, F&I GROUND MOUNT, 12-20 SF	AS	3.000		3.000
		0700- 1- 13	SINGLE POST SIGN, F&I GROUND MOUNT, 21-30 SF	AS	1.000		1.000
		0700- 1- 21	SINGLE POST SIGN, F&I BARRIER MOUNT INDEX 11871 UP TO 12 SF	AS	1.000		1.000
		0700- 1- 60	SINGLE POST SIGN, REMOVE	AS	37.000		37.000
		0705- 11- 3	DELINEATOR, FLEXIBLE HIGH VISABILITY MEDIAN	EA	18.000		18.000
		0710- 90-	PAINTED PAVEMENT MARKINGS, FINAL SURFACE 42872715201	LS	1.000		1.000
		0711- 14-123	THERMOPLASTIC, PREFORMED, WHITE, SOLID, 12"	LF	163.000		163.000
		0711- 14-125	THERMOPLASTIC, PREFORMED, WHITE, SOLID, 24"	LF	120.000		120.000
		0711- 14-160	THERMOPLASTIC, PREFORMED, WHITE, MESSAGE	EA	38.000		38.000
		0711- 14-170	THERMOPLASTIC, PREFORMED, WHITE, ARROWS	EA	9.000		9.000
		0741- 1- 11	TRAFFIC MONITORING SITE VEHICLE SENSOR-NON-WEIGHT, FURNISH & INSTALL, TYPE 1 AXLE SENSOR- IN ROAD	EA	18.000		18.000
		0745- 70- 12	TMS INDUCTIVE LOOP ASSEM, F&I, 2 LOOPS / LANE	AS	18.000		18.000

NOTICE: THE OFFICIAL RECORD OF THIS SHEET IS THE ELECTRONIC FILE SIGNED AND SEALED UNDER RULE 61G15-23.003, F.A.C.

12/05/2013 09:36:31 AM

FLORIDA DEPARTMENT OF TRANSPORTATION
PROPOSAL SUMMARY OF PAY ITEMS
FOR PROPOSAL: T4386

LEAD PROJECT : 428727-1-52-01 | DISTRICT : 04 | COUNTY/SECTION : 86030000

PROJECT(S) : 42872715201, 42872715202 | COUNTY : PALM BEACH

0003 SUMMARY OF LIGHTING

SPC	ALT	ITEM NUMBER	ITEM DESCRIPTION	UNIT	42872715201	42872715202	QUANTITY TOTAL
		0630- 2- 12	CONDUIT, FURNISH & INSTALL, DIRECTIONAL BORE	LF		8058.000	8058.000
		0635- 2- 11	PULL & SPLICE BOX, F&I, 13" X 24" COVER SIZE	EA		45.000	45.000
		0715- 1- 12	LIGHTING CONDUCTORS, F&I, INSULATED, NO.8 - 6	LF		23640.000	23640.000
		0715- 4-600	LIGHT POLE COMPLETE, REMOVE	EA		25.000	25.000
		0715- 7- 11	LOAD CENTER, F&I, SECONDARY VOLTAGE	EA		1.000	1.000
		0715- 10- 5	LIGHT POLE FOUNDATION, REMOVE	EA		1.000	1.000
		0715-500- 1	POLE CABLE DISTRIBUTION SYSTEM, CONVENTIONAL	EA		38.000	38.000
T		0715-511-115	LIGHT POLE COMPLETE- SPECIAL DESIGN, F&I, SINGLE ARM SHOULDER MOUNT, ALUMINUM, 15'	EA		11.000	11.000
T		0715-512-140	LIGHT POLE COMPLETE- SPECIAL DESIGN, F&I, DOUBLE ARM SHOULDER MOUNT, ALUMINUM, 40'	EA		27.000	27.000

NOTICE: THE OFFICIAL RECORD OF THIS SHEET IS THE ELECTRONIC FILE SIGNED AND SEALED UNDER RULE 61G15-23.003, F.A.C.

12/05/2013 09:36:31 AM

FLORIDA DEPARTMENT OF TRANSPORTATION
PROPOSAL SUMMARY OF PAY ITEMS
FOR PROPOSAL: T4386

LEAD PROJECT : 428727-1-52-01 | DISTRICT : 04 | COUNTY/SECTION : 86030000

PROJECT(S) : 42872715201, 42872715202 | COUNTY : PALM BEACH

0004 SUMMARY OF SIGNALIZATION

SPC	ALT	ITEM NUMBER	ITEM DESCRIPTION	UNIT	42872715201	42872715202	QUANTITY TOTAL
		0630- 2- 11	CONDUIT, FURNISH & INSTALL, OPEN TRENCH	LF		55.000	55.000
		0630- 2- 12	CONDUIT, FURNISH & INSTALL, DIRECTIONAL BORE	LF	375.000	1180.000	1555.000
		0630- 2- 14	CONDUIT, FURNISH & INSTALL, ABOVEGROUND	LF	40.000		40.000
		0632- 7- 1	SIGNAL CABLE- NEW OR RECONSTRUCTED INTERSECTION, FURNISH & INSTALL	PI	4.000	3.000	7.000
D		0634- 4-400	SPAN WIRE ASSEMBLY, ADJUST	PI	1.000		1.000
		0635- 2- 11	PULL & SPLICE BOX, F&I, 13" X 24" COVER SIZE	EA	16.000	45.000	61.000
		0639- 1-123	ELECTRICAL POWER SERVICE, F&I, UNDERGROUND, METER NOT REQUIRED	AS		3.000	3.000
		0639- 2- 1	ELECTRICAL SERVICE WIRE	LF		140.000	140.000
		0639- 3- 11	ELECTRICAL SERVICE DISCONNECT, F&I, POLE MOUNT	EA		1.000	1.000
		0641- 2- 11	PRESTRESSED CONCRETE POLE, F&I, TYPE P-II PEDESTAL	EA		1.000	1.000
		0646- 1- 11	ALUMINUM SIGNALS POLE, PEDESTAL	EA	3.000	6.000	9.000
		0649- 31-101	STEEL MAST ARM,F&I, WIND SPEED-150,SINGLE ARM, W/0 LUMINAIRE-36	EA		2.000	2.000
		0649- 31-102	MAST ARM,F&I, WIND SPEED-150,SINGLE ARM,W/0 LUMINAIRE-46	EA		7.000	7.000
		0649- 31-103	MAST ARM,F&I, WIND SPEED-150,SINGLE ARM,W/0 LUMINAIRE-60	EA		1.000	1.000
		0650- 1-311	TRAFFIC SIGNAL, F&I, 3 SECTION, 1 WAY, ALUMINUM	AS		23.000	23.000
		0650- 1-511	TRAFFIC SIGNAL, F&I, 5 SECTION, 1 WAY, ALUMINUM	AS		5.000	5.000
		0653-191-	PEDESTRIAN SIGNAL, F&I, LED - COUNT DOWN, 1 DIRECTION	AS	2.000	8.000	10.000
		0660- 4- 11	VEHICLE DETECTION SYSTEM- VIDEO, FURNISH & INSTALL CABINET EQUIPMENT	EA	2.000	10.000	12.000
		0660- 4- 12	VEHICLE DETECTION SYSTEM- VIDEO, FURNISH & INSTALL ABOVE GROUND EQUIPMENT	EA	2.000	10.000	12.000
		0665- 1- 11	PEDESTRIAN DETECTOR, FURNISH & INSTALL, STANDARD	EA	9.000	6.000	15.000
		0665- 1- 12	PEDESTRIAN DETECTOR, FURNISH & INSTALL, ACCESSIBLE	EA	2.000	2.000	4.000
T		0670- 5-130	TRAFFIC CONTROLLER ASSEMBLY, F&I, SPECIAL	AS		3.000	3.000
		0684- 1- 1	MANAGED FIELD ETHERNET SWITCH, FURNISH & INSTALL	EA		3.000	3.000
		0690- 10-	SIGNAL HEAD TRAFFIC ASSEMBLY REMOVAL	EA		22.000	22.000
		0690- 20-	SIGNAL PEDESTRIAN ASSEMBLY REMOVAL	EA	2.000	6.000	8.000
		0690- 31-	SIGNAL PEDESTAL REMOVAL	EA		1.000	1.000
		0690- 34- 1	COMPLETE POLE REMOVAL- DEEP, DIRECT BURIAL	EA		12.000	12.000
		0690- 50-	CONTROLLER ASSEMBLY, REMOVE, COMPLETE ASSEMBLY	EA		3.000	3.000
		0690- 60-	DETECTOR VEHICLE ASSEMBLY REMOVE	EA		10.000	10.000
		0690- 70-	DETECTOR PEDESTRIAN ASSEMBLY REMOVE	EA	9.000	6.000	15.000
		0690- 80-	SPAN WIRE ASSEMBLY, REMOVE	EA		11.000	11.000
		0690- 90-	CONDUIT & CABLING- WITHIN INTERSECTION, REMOVE	PI		3.000	3.000
		0690-100-	SIGNAL EQUIPMENT MISCELLANOUS REMOVE	PI		3.000	3.000
		0700- 3-201	SIGN PANEL, FURNISH & INSTALL OVERHEAD MOUNT, UP TO 12 SF	EA		1.000	1.000
		0700- 3-601	SIGN PANEL, REMOVE, UP TO 12 SF	EA		6.000	6.000
		0700- 5- 21	INTERNALLY ILLUMINATED SIGN, FURNISH & INSTALL, UP TO 12 SF	EA		6.000	6.000
		0700- 5- 22	INTERNALLY ILLUMINATED SIGN, FURNISH & INSTALL, 12-18 SF	EA		4.000	4.000

NOTICE: THE OFFICIAL RECORD OF THIS SHEET IS THE ELECTRONIC FILE SIGNED AND SEALED UNDER RULE 61G15-23.003, F.A.C.

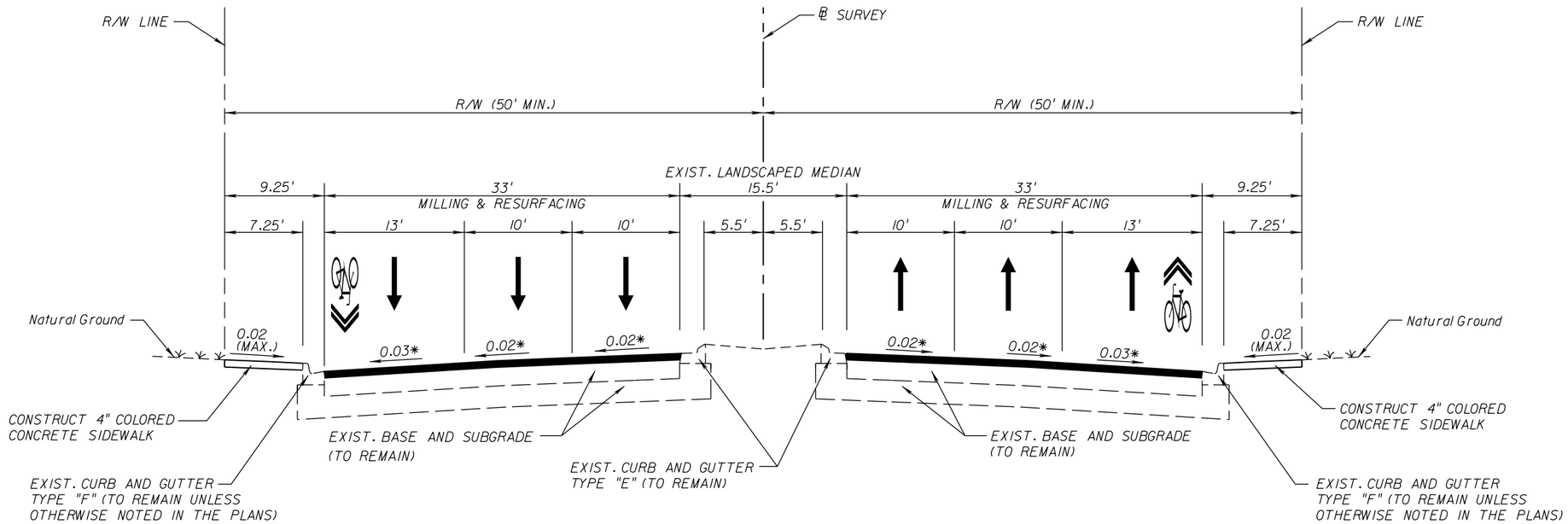

* MATCH EXISTING CROSS SLOPE; APPROXIMATE VALUE IS SHOWN

TYPICAL SECTION

SR A-1-A (S. OCEAN DRIVE)

STA. 10+00.00 TO STA. 57+83.68

TRAFFIC DATA

CURRENT YEAR = 2012 AADT = 34,200
ESTIMATED OPENING YEAR = 2014 AADT = 38,000
ESTIMATED DESIGN YEAR = 2034 AADT = 52,800
K = 9.48% D = 53.59% T = 7.00% (24 HOUR)
DESIGN HOUR T = 3.5%
DESIGN SPEED = 35 MPH
POSTED SPEED = 35 MPH

MILLING

MILL EXISTING ASPHALT PAVEMENT (2 1/2" AVG. DEPTH)

RESURFACING

TYPE SP STRUCTURAL COURSE (TRAFFIC C)(1 1/2")
AND FRICTION COURSE FC-9.5 (TRAFFIC C)(1")(PG 76-22, ARB)

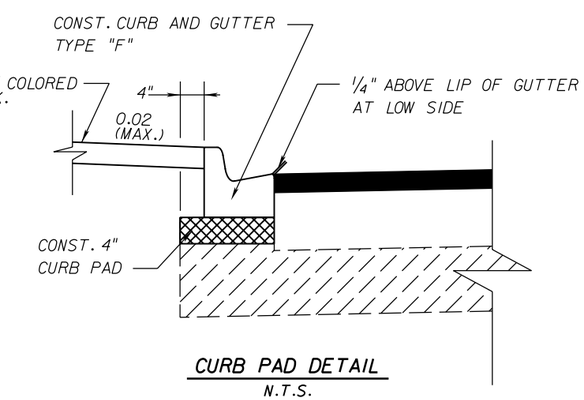

CURB PAD DETAIL

N.T.S.

NOTES:

1. USE THIS DETAIL AT LOCATION WHERE CURB AND GUTTER IS BEING REPLACED AS NOTED IN THE PLANS.
2. CONSTRUCT CURB PAD USING B-12.5 AS BASE MATERIAL. ALL COSTS FOR CONST. OF CURB PAD (MATERIAL, EXCAVATION, COMPACTION, SHAPING, ETC.) TO BE INCLUDED IN THE COST OF CURB & GUTTER.

NOTICE: THE OFFICIAL RECORD OF THIS SHEET IS THE ELECTRONIC FILE SIGNED AND SEALED UNDER RULE 61G15-23.003, F.A.C.

REVISIONS			
DATE	DESCRIPTION	DATE	DESCRIPTION

A&P Consulting Transportation Engineers Corp.
10305 N.W. 41 Street, suite 115
Miami, FL 33178
(305) 592-7283 / fax: (305) 593-1594
CA No. : EB-0007797
Eithel M. Sierra, P.E. No. 55401

STATE OF FLORIDA
DEPARTMENT OF TRANSPORTATION

ROAD NO.	COUNTY	FINANCIAL PROJECT ID
A1A	BROWARD	428727-1-52-01

TYPICAL SECTION

SHEET NO. 7

GENERAL NOTES:

1. REFER TO THE "PROJECT NETWORK CONTROL" SHEETS FOR HORIZONTAL AND VERTICAL DATUM'S USED ON THIS PROJECT.

2. ALL PUBLIC LAND CORNERS AND PRIMARY NETWORK CONTROL SURVEY MONUMENTS ARE TO BE PROTECTED BY THE CONTRACTOR. CORNERS AND MONUMENTS WITHIN THE WORK ZONE AND IN DANGER OF BEING DAMAGED, DESTROYED OR COVERED SHALL BE PROPERLY REFERENCED BY A REGISTERED LAND SURVEYOR IN ACCORDANCE WITH THE MINIMUM TECHNICAL STANDARDS OF THE FLORIDA BOARD OF PROFESSIONAL LAND SURVEYOR PRIOR TO THE BEGINNING OF WORK. UPON PROJECT COMPLETION THE CONTRACTOR SHALL RESTORE ALL SUCH CORNERS AND MONUMENTS AND SHALL FURNISH TO THE DISTRICT LOCATION SURVEYOR A SIGNED AND SEALED COPY OF THE LAND SURVEYOR'S REFERENCE DRAWING. INCLUDE ALL COST OF REFERENCING, RESTORING AND PRESERVING CORNERS AND MONUMENTS IN THE BID PRICE FOR ITEM 101-1, MOBILIZATION.

3. ALL EXCESS MATERIAL AS DESIGNATED BY THE ENGINEER IS TO BE DISPOSED BY THE CONTRACTOR IN AREAS PROVIDED BY HIM WITHIN 72 HOURS OF BEING DEPOSITED IN THE CONSTRUCTION AREA AND AT THE CONTRACTOR'S EXPENSE.

4. THE CONTRACTOR SHALL USE A STREET SWEEPER (USING WATER) OR OTHER EQUIPMENT CAPABLE OF CONTROLLING AND REMOVING DUST. APPROVAL OF THE USE OF SUCH EQUIPMENT IS CONTINGENT UPON ITS DEMONSTRATED ABILITY TO DO THE WORK. CLEANING AND SWEEPING IS TO BE INCLUDED IN ITEM 102-1, MAINTENANCE OF TRAFFIC.

5. PAINTED CONTROL POINT STATIONING AS DESCRIBED IN SPECIFICATION 5-7 ENGINEERING AND LAYOUT, SHALL BE STENCILED ONTO THE FACE OF CURB EVERY 100'. THE CONTRACTOR SHALL MAINTAIN THESE STATION MARKS VISIBLE UNTIL FINAL INSPECTION. COST TO BE INCLUDED IN RELATED PAY ITEMS THAT REQUIRE LAYOUTS.

6. ALL WORK SHALL BE PERFORMED WITHIN THE PUBLIC RIGHT OF WAY UNLESS A LICENSE AGREEMENT WITH THE PROPERTY OWNER HAS BEEN EXECUTED.

7. SAW CUTTING OF THE EXISTING SIDEWALKS SHALL BE MADE ONLY AT THE NEAREST FLAG JOINTS. COST OF THE ADDITIONAL QUANTITY TO BE INCLUDED IN THE RELATED BID ITEMS.

8. EXISTING DRIVEWAYS, CURB RAMPS, SIDEWALK, CURB AND GUTTER AND TRAFFIC SEPARATORS WITHIN THE LIMITS OF THIS PROJECT ARE TO REMAIN UNLESS OTHERWISE NOTED IN THE PLANS.

9. ALL EXISTING UTILITIES INCLUDING EXISTING STORM DRAINAGE SYSTEM ARE TO REMAIN UNLESS OTHERWISE NOTED.

10. ALL MILLED AREAS WILL BE COVERED WITH TYPE SP THE SAME DAY THAT MILLING OCCURS. TRAFFIC WILL NOT BE ALLOWED ON MILLED SURFACE AT ANYTIME.

11. CONTRACTOR TO SAW CUT EXISTING ASPHALT PAVEMENT AT THE LIMITS OF THE MILLING AND RESURFACING.

12. ANY GRASSED AREAS DISTURBED DURING CONSTRUCTION ARE TO BE SODDED WITHIN 48 HOURS FROM DISTURBANCE. THESE DISTURBED AREAS TO BE RESTORED TO EQUAL OR BETTER CONDITION USING THE SAME TYPE OF TURF (SOD) AS EXISTING AT NO ADDITIONAL COST TO THE DEPARTMENT.

13. TWO FULL BUSINESS DAYS PRIOR TO DIGGING THE CONTRACTOR SHALL CALL SUNSHINE STATE ONE CALL OF FLORIDA, TELEPHONE NUMBER 811, AND THE UTILITY OWNER AND REQUEST UTILITY LOCATIONS. A CONTRACTOR'S REPRESENTATIVE MUST BE PRESENT WHEN UTILITY COMPANIES LOCATE THEIR FACILITIES.

UTILITY OWNER:

COMPANY	TELEPHONE NUMBERS	CONTACT PERSON
ATLANTIC COMMUNICATIONS	(305) 861-8069 EXT. 3204	DAVID MCBRIDE
AT&T DISTRIBUTION	(954) 309-0753	OTIS KEEVE
BROWARD COUNTY TRAFFIC ENGINEERING DEPARTMENT (BCTED)	(954) 847-2725	GREG LOVAGLIO
BCTED (COPPER INTERCONNECT CABLE)	(954) 847-2752	MIGUEL MORGADO
BCTED (FIBER OPTIC CABLE)	(954) 847-2745	ROBERT BLOUNT
BROWARD COUNTY WATER	(954) 553-6137	DAVID J. O'CONNOR
CITY OF HALLANDALE BEACH	(954) 457-1617	RAISA ZELDIS
CITY OF HOLLYWOOD UTILITIES	(561) 791-9280	GREG JEFFRIES
COMCAST	(954) 447-8408	CHUCK HUSTON
FPL-DISTRIBUTION	(954) 401-4584	BYRON SAMPLE
FPL-TRANSMISSION	(561) 694-4060	GEORGE J. BECK
HOTWIRE COMMUNICATIONS	(954) 628-7022	PHIL GALLUB
MIAMI-DADE COUNTY PUBLIC WORKS	(305) 592-8925 EXT. 258	AURELIO DEL VALLE
MIAMI-DADE WATER & SEWER	(786) 268-5255	PATRICK CHONG
TECO PEOPLES GAS	(954) 453-0812	MAX CHAMORRO
CITY OF NORTH MIAMI BEACH	(305) 948-2980	TARIM ROSSY

Always call 811 two full business days before you dig

Sunshine811.com

14. THE LOCATION OF THE UTILITIES SHOWN IN THE PLANS ARE BASED ON LIMITED INVESTIGATION TECHNIQUES AND SHOULD BE CONSIDERED APPROXIMATE ONLY. THE VERIFIED LOCATIONS/ELEVATIONS APPLY ONLY AT THE POINT SHOWN. INTERPOLATION BETWEEN THESE TWO POINTS HAVE NOT BEEN VERIFIED. UTILITIES SHALL REMAIN UNLESS OTHERWISE NOTED.

15. CONTRACTOR SHALL VERIFY DEPTH OF TRAFFIC CONTROL CABLES, WHEN PRESENT, IN LOCATIONS WHERE SIDEWALK IS BEING REPLACED.

ENVIRONMENTAL NOTES:

1. THE CONTRACTOR SHALL COORDINATE SELECTION AND REVIEW OF ANY PROPOSED STAGING OR STOCKPILING AREAS WITH THE DISTRICT CONSTRUCTION ENVIRONMENTAL COORDINATOR AT (954) 777-4665.

2. NO STAGING, STOCKPILING OR OTHER CONSTRUCTION ACTIVITIES WILL BE ALLOWED WITHIN OR ADJACENT TO THE HALLANDALE CITY BEACH NORTH, HALLANDALE CITY BEACH SOUTH, OR OTHER ENVIRONMENTALLY SENSITIVE LANDS.

3. ALL LANDSCAPE IS DESIGNATED TO REMAIN UNLESS OTHERWISE NOTED IN PLANS. ALL LANDSCAPE WITHIN 5 FEET OF CONSTRUCTION ACTIVITIES SHALL BE PROTECTED AS PER DESIGN STANDARD INDEX 544. COST OF TREE PROTECTION TO BE INCLUDED IN THE RELATED PAY ITEM.

4. NO BEACH ILLUMINATION WILL BE PERMITTED DURING SEA TURTLE NESTING SEASON (MARCH 1 THROUGH OCTOBER 31). SHOULD NIGHT CONSTRUCTION BE NECESSARY DURING THOSE MONTHS, PLEASE CONTACT THE DISTRICT CONSTRUCTION ENVIRONMENTAL COORDINATOR (DCEC) AT (954) 777-4665 TO ENSURE THAT TEMPORARY LIGHTING WILL NOT IMPACT SEA TURTLE NESTING. ANY NIGHT WORK DURING SEA TURTLE NESTING SEASON BETWEEN APPROXIMATE STATION 39+00 AND APPROXIMATE STATION 42+50 OR ANY OTHER AREA WHERE LIGHTING MAY BE VISIBLE FROM THE BEACH, WILL REQUIRE A TEMPORARY LIGHTING PLAN AND PLAN APPROVAL FROM THE FLORIDA FISH AND WILDLIFE CONSERVATION COMMISSION (FWC) AND THE U.S. FISH AND WILDLIFE SERVICE (FWS). THE CONTRACTOR IS RESPONSIBLE FOR ALL COSTS, TIME, AND ASPECTS OF THE TEMPORARY LIGHTING PLAN, INCLUDING BUT NOT LIMITED TO, PREPARATION IN ACCORDANCE WITH AGENCY REQUIREMENTS, REGULATORY AGENCY COORDINATION/APPROVAL PROCESS TIMEFRAMES, AND IMPLEMENTATION.

HARDSCAPE NOTES:

1. ALL HARDSCAPE DESIGN SHALL CONFORM TO HARDSCAPE DETAILS AND ROADWAY PLANS.

2. FOR PATTERN STYLE, DESIGN GEOMETRY, AND MATERIALS FINISHES REFER TO HARDSCAPE DETAILS.

3. FOR PATTERN STYLE AND GEOMETRY OF PROPOSED PATTERNED ASPHALT PEDESTRIAN CROSSWALK, REFER TO HARDSCAPE DETAILS.

NOTICE: THE OFFICIAL RECORD OF THIS SHEET IS THE ELECTRONIC FILE SIGNED AND SEALED UNDER RULE 61G15-23.003, F.A.C.

STORM SEWER MANHOLES TO BE ADJUSTED (PAY ITEM 425-5)

STATION ℄ SURVEY	OFFSET	EA	
		P	F
9+93.33	42.18' LT	1	
17+99.04	40.71' RT	1	
33+28.28	47.80' LT	1	
38+96.29	46.18' LT	1	
41+19.73	48.71' RT	1	
41+19.82	43.10' RT	1	
42+80.34	42.42' RT	1	
42+81.82	27.53' RT	1	
47+70.44	42.24' RT	1	
49+47.71	53.45' RT	1	
50+52.23	72.70' RT	1	
50+74.30	43.88' LT	1	
50+75.89	35.14' RT	1	
52+81.95	39.92' RT	1	
52+91.65	10.04' RT	1	
53+00.31	41.80' LT	1	
	TOTAL	16	

SUMMARY OF MISCELLANEOUS ASPHALT

(PAY ITEM 339-1)

LOCATION	SIDE	UNDER GUARDRAIL				
STA. TO STA.		THICK (IN)	SY		TN	
			P	F	P	F
FROM 49+61.50 ℄ SURVEY TO 50+24.00 ℄ SURVEY	LT	2	24.4		2.4	
TOTAL			24.4		2.4	

SUMMARY OF GUARDRAIL

LOCATION		GUARDRAIL (LF)				END ANCHORAGE ASSEMBLIES (EA)				SPECIAL GUARDRAIL POST (EA)		REMARKS	FIELD BOOK REFERENCE
STATION	SIDE	ROADWAY (PAY ITEM 536-1-1)		GUARDRAIL REMOVAL		TYPE II (PAY ITEM 536-85-25)		PARALLEL (PAY ITEM 536-85-24)					
		P	F	P	F	P	F	P	F	P	F		
FROM 49+61.50 ℄ SURVEY TO 50+24.00 ℄ SURVEY	LT	63.00				1		1					
TOTAL		63.00				1		1					

PAY ITEM NOTES

102-14: TRAFFIC CONTROL OFFICER TO BE USED FOR PACING/ROLLING BLOCKADE OPERATIONS AND TRAFFIC CONTROL AT SIGNALIZED INTERSECTIONS.

110-1-1: INCLUDES THE COST OF REMOVAL AND DISPOSAL OF EXISTING PAVERS AT LOCATIONS INDICATED IN THE PLANS.

425-5: ONLY ONE PAYMENT SHALL BE MADE PER MANHOLE TO BE ADJUSTED. PRICE AND PAYMENT FOR EACH UNIT INCLUDES COST OF ALL ADJUSTMENTS REGARDLESS OF THE NUMBER OF ADJUSTMENTS REQUIRED FOR THE PROPER CONSTRUCTION OF THE PROJECT. MANHOLES SHALL BE ADJUSTED WHENEVER THEY ARE 1/4" OR MORE ABOVE OR BELOW THE PAVEMENT FINAL GRADE ELEVATION.

520-1-7 &: 520-1-10 INCLUDES THE COST OF SAWCUTTING, REMOVAL AND DISPOSAL OF EXISTING CURB AND GUTTER.

522-1: INCLUDES 1638 SY OF REMOVAL AND DISPOSAL OF CONCRETE PAVEMENT IN AREAS WHERE PROPOSED SIDEWALK WILL BE CONSTRUCTED. INCLUDES EXCAVATION AND FILL FOR THE CONSTRUCTION OF THE NEW SIDEWALK. INCLUDES THE SOIL PREPARATION AND CONCRETE PLACEMENT WHERE 4" THICK CONCRETE IS PROPOSED IN PAVER AREAS AND MEDIANS TO ACCEPT DETECTABLE WARNING DEVICES. INCLUDE COST FOR THE ADJUSTMENT OF EXISTING HANDRAIL WHEN RECONSTRUCTING THE CURB RAMP AND SIDEWALK AT THE SW. CORNER OF SR AIA AND HALLANDALE BEACH BLVD. IT ALSO INCLUDES THE COST OF PROVIDING INTEGRAL COLOR CONCRETE WITH BROOM FINISH COLOR AT LOCATIONS INDICATED IN THE PLANS.

0000-200-1: INCLUDES 2077 SY OF REMOVAL OF CONCRETE PAVEMENT IN AREAS WHERE COLORED CONCRETE SIDEWALK WITH SURFACE-SEEDED AGGREGATE FINISH WILL BE PLACED. INCLUDES EXCAVATION AND FILL FOR THE CONSTRUCTION OF THE NEW SIDEWALK.

527-2: INCLUDES PLACEMENT OF THE DETECTABLE WARNING SURFACE AS PER MANUFACTURERS SPECIFICATIONS ON CONCRETE SURFACES. ALSO INCLUDES PLACEMENT OF A 4" THICK CONCRETE SLAB DIRECTLY UNDER THE DETECTABLE WARNING SURFACE IN PAVER AREAS AS SPECIFIED IN THE HARDSCAPE DETAILS.

570-1-2: ST. AGUSTINE GRASS SHALL ONLY BE USED IN IRRIGATED AREAS ONLY.

NOTICE: THE OFFICIAL RECORD OF THIS SHEET IS THE ELECTRONIC FILE SIGNED AND SEALED UNDER RULE 61G15-23.003, F.A.C.

SUMMARY OF EROSION AND SEDIMENT CONTROL DEVICES

LOCATION		SIDE	SEDIMENT BARRIER (104-10-3)		FLOATING TURBIDITY BARRIER (104-11)		INLET PROTECTION (104-18)		REMARKS	FIELD BOOK REFERENCE
			LF		LF		EA			
STA. TO STA.	OFF.		P	F	P	F	P	F		
10+35.68 TO 26+02.39	@ROW	LT	1574							
26+64.16 TO 30+84.93	@ROW	LT	422							
31+93.29 TO 35+34.96	@ROW	LT	344							
35+54.17 TO 49+48.85	@ROW	LT	1395							
53+98.85 TO 54+32.74	@ROW	LT	34							
54+58.49 TO 55+01.05	@ROW	LT	43							
55+44.04 TO 57+84.22	@ROW	LT	240							
10+35.68 TO 41+93.06	@ROW	RT	3148							
42+87.46 TO 50+08.12	@ROW	RT	730							
56+25.28 TO 57+23.05	@ROW	RT	98							
9+95.00	880.00'	LT			63				@INTERCOSTAL	
35+10.00	610.00'	LT			63				@INTERCOSTAL	
51+04.50	630.00'	LT			63				@INTERCOSTAL	
12+00.45	41.00'	RT					1			
12+02.69	40.62'	LT					1			
17+57.34	40.90'	RT					1			
17+96.44	40.83'	LT					1			
23+96.26	40.65'	RT					1			
24+08.18	40.98'	RT					1			
30+18.01	40.53'	LT					1			
30+18.04	41.03'	RT					1			
32+06.09	57.69'	LT					1			
35+20.41	40.85'	RT					1			
35+20.65	40.72'	LT					1			
41+19.05	60.18'	RT					1			
41+19.06	40.90'	LT					1			
47+69.16	69.10'	RT					1			
47+70.79	42.43'	LT					1			
52+80.34	44.77'	RT					1			
53+00.60	44.46'	LT					1			
54+76.94	40.86'	LT					1			
TOTAL			8028		189		18			

SUMMARY OF LITTER REMOVAL AND MOWING*

CONST. PHASE	DURATION (DAYS)	FREQUENCY (DAYS)	LITTER REMOVAL (107-1)			MOWING (107-2)			REMARKS
			CYCLES	AREA		CYCLES	AREA		
				AC/CYCLE	TOTAL (AC)		AC/CYCLE	TOTAL (AC)	
1	286	30	9	3.380	30.420	9	1.188	10.692	
1A	185	30	6	3.380	20.280	6	0.917	5.502	
11	49	30	1	3.380	3.380	1	0.917	0.917	
111	36	30	1	3.380	3.380	1	0.917	0.917	
IV	45	30	1	3.380	3.380	1	0.917	0.917	
			TOTAL	P	60.84	TOTAL	P	18.94	
				F			F		

* THE PHASE DURATION SHOWN ARE NOT BASED ON PROJECT SCHEDULE AND SHOULD NOT BE USED FOR SCHEDULING PURPOSES.

SUMMARY OF TEMPORARY SIGNALIZATION*

PHASE	DURATION	TEMP SIGNALS AND MAINTENANCE PER INTERSECTION, EACH DAY						TEMP DETECTION AND MAINTENANCE PER INTERSECTION, EACH DAY					
		PAY ITEM 102-104						PAY ITEM 102-107-1					
		EXISTING			TEMPORARY			EXISTING			TEMPORARY/NEW		
	DAYS	#	PLAN	FINAL	#	PLAN	FINAL	#	PLAN	FINAL	#	PLAN	FINAL
1	286	7	2,002			0		7	2,002			0	
1A	185	7	1,295			0		7	1,295			0	
11	49	7	343			0		7	343			0	
111	36	7	252			0		7	252			0	
IV	45	7	315			0		7	315			0	
SUBTOTAL	601	ED	4,207			0		ED	4,207			0	
TOTAL-PLAN		ED	4,207			0		ED	4,207			0	
TOTAL-FINAL		ED						ED					

* THE PHASE DURATION SHOWN ARE NOT BASED ON PROJECT SCHEDULE AND SHOULD NOT BE USED FOR SCHEDULING PURPOSES.

NOTICE: THE OFFICIAL RECORD OF THIS SHEET IS THE ELECTRONIC FILE SIGNED AND SEALED UNDER RULE 61G15-23.003, F.A.C.

REVISIONS

DATE	DESCRIPTION	DATE	DESCRIPTION

A&P Consulting Transportation Engineers Corp.
10305 N.W. 41 Street, suite 115
Miami, FL 33178
(305) 592-7283 / fax: (305) 593-1594
CA No. : EB-0007797
Eithel M. Sierra, P.E. No. 55401

STATE OF FLORIDA
DEPARTMENT OF TRANSPORTATION

ROAD NO.	COUNTY	FINANCIAL PROJECT ID
A1A	BROWARD	428727-1-52-01

SUMMARY OF QUANTITIES

SHEET NO. 10

SUMMARY OF DETECTABLE WARNING
(PAY ITEM 527-2)

LOCATION	SIDE	OFFSET	QUANTITY (SF)						FIELD BOOK REFERENCE
			PROPOSED CURB RAMP		MID-BLOCK CROSSING		EXISTING CURB RAMP		
STATION			P	F	P	F	P	F	
10+37.85	LT	44.89'	11						
10+66.98	LT	40.67'	8						
10+65.12	RT	40.98'	8						
17+80.64	LT	40.88'	8						
17+83.83	RT	40.76'	8						
18+14.40	RT	43.83'	11						
18+90.60	RT	46.89'	8						
26+03.13	RT	40.94'	8						
26+02.58	LT	40.76'	8						
31+04.48	LT	60.14'	11						
31+72.29	LT	63.61'	9						
35+98.81	RT	40.85'	8						
35+99.05	LT	40.67'	8						
41+73.50	RT	63.46'	8						
41+75.79	LT	3.39'			10				
41+75.98	RT	3.87'			10				
41+76.05	LT	42.00'	8						
42+25.00	RT	70.33'					20		
42+45.17	RT	66.17'					15		
42+62.79	RT	67.82'					10		
42+83.39	RT	67.89'					19		
50+33.50	RT	78.82'	8						
50+40.29	RT	13.59'	13						
50+42.46	LT	3.21'	13						
50+42.64	RT	53.25'	13						
50+49.51	LT	33.62'	13						
53+55.94	LT	49.19'	10						
53+90.41	LT	46.52'	10						
54+18.16	LT	40.91'	8						
54+19.24	RT	5.18'			10				
54+19.50	RT	40.58'	8						
54+19.52	LT	5.97'			10				
SUBTOTAL			226		40		64		

SUMMARY OF DETECTABLE WARNING
(PAY ITEM 527-2)

LOCATION	SIDE	OFFSET	QUANTITY (SF)						FIELD BOOK REFERENCE
			PROPOSED CURB RAMP		MID-BLOCK CROSSING		EXISTING CURB RAMP		
STATION			P	F	P	F	P	F	
9+38.63 ℄ HALLANDALE AVE	LT	109.14'	8						
9+43.12 ℄ HALLANDALE AVE	LT	20.93'	8						
9+52.72 ℄ HALLANDALE AVE	LT	93.41'	19						
9+53.05 ℄ HALLANDALE AVE	LT	77.79'	13						
9+53.39 ℄ HALLANDALE AVE	LT	61.42'	15						
9+53.71 ℄ HALLANDALE AVE	RT	5.24'	24						
9+53.82 ℄ HALLANDALE AVE	LT	40.92'	15						
9+54.55 ℄ HALLANDALE AVE	LT	6.07'	13						
10+57.05 ℄ HALLANDALE AVE	LT	72.74'	8						
10+59.98 ℄ HALLANDALE AVE	LT	51.98'	14						
10+61.58 ℄ HALLANDALE AVE	LT	22.90'	15						
10+62.43 ℄ HALLANDALE AVE	RT	0.31'	13						
10+66.18 ℄ HALLANDALE AVE	RT	12.36'	19						
SUBTOTAL			184						
TOTAL	P	514							
	F								

SUMMARY OF PIPE LINER
(PAY ITEM 431-1-1)

LOCATION	SIDE	QUANTITY (LF)			
		P		F	
STA. TO STA.					
FROM 12+00.45 ℄ SURVEY	RT	90			
TO 12+02.65 ℄ SURVEY	LT				
TOTAL		90			

NOTICE: THE OFFICIAL RECORD OF THIS SHEET IS THE ELECTRONIC FILE SIGNED AND SEALED UNDER RULE 61G15-23.003, F.A.C.

REVISIONS			
DATE	DESCRIPTION	DATE	DESCRIPTION

A&P Consulting Transportation Engineers Corp.
10305 N.W. 41 Street, suite 115
Miami, FL 33178
(305) 592-7283 / fax: (305) 593-1594
CA No. : EB-0007797
Eithel M. Sierra, P.E. No. 55401

STATE OF FLORIDA
DEPARTMENT OF TRANSPORTATION

ROAD NO.	COUNTY	FINANCIAL PROJECT ID
AIA	BROWARD	428727-1-52-01

SUMMARY OF QUANTITIES

SHEET NO.
11

SUMMARY OF COLORED CONCRETE SIDEWALK WITH SURFACE-SEEDED AGGREGATE FINISH

PAY ITEM NO.	DESCRIPTION	UNIT	SHEET NUMBERS 13 PLAN	13 FINAL	14 PLAN	14 FINAL	15 PLAN	15 FINAL	16 PLAN	16 FINAL	17 PLAN	17 FINAL	18 PLAN	18 FINAL	19 PLAN	19 FINAL	20 PLAN	20 FINAL	- PLAN	- FINAL	- PLAN	- FINAL	TOTAL THIS SHEET PLAN	TOTAL THIS SHEET FINAL	GRAND TOTAL PLAN	GRAND TOTAL FINAL	REF. SHEET
0000-200-1	INTEGRAL COLORED CONCRETE WITH BROOM FINISH COLOR TO MATCH SCOFIELD CHROMIX #5130 (SPRING BEIGE)	SY	62		87.8		101.4		122.3		81		119.5		130.2		69.3						774		2961		
0000-200-1	COLOR 1: INTEGRAL COLORED CONCRETE WITH BROOM FINISH COLOR TO MATCH SCOFIELD CHROMIX #11266 (COOL GRAY) AGGREGATE MIX TO INCLUDE: 60% DARK BLUE GLASS; 20% TURQUOISE GLASS; 10% CRYSTAL TEAL GLASS; 10% SEASHELL	SY	46.4		75.4		63.8		75.4		63.8		87		87		40.6						539				
0000-200-1	COLOR 2: INTEGRAL COLORED CONCRETE WITH BROOM FINISH COLOR TO MATCH SCOFIELD CHROMIX #11266 (COOL GRAY) AGGREGATE MIX TO INCLUDE: 10% DARK BLUE GLASS; 50% TURQUOISE GLASS; 20% CRYSTAL TEAL GLASS; 10% SEASHELL; 10% MIRROR FLECK	SY	48.6		56.8		97.1		115.8		67.9		97.1		118.8		67.3						669				
0000-200-1	COLOR 3: INTEGRAL COLORED CONCRETE WITH BROOM FINISH COLOR TO MATCH SCOFIELD CHROMIX #3987 (PORCELAIN GRAY) AGGREGATE MIX TO INCLUDE: 50% CRYSTAL WHITE ONYX; 20% LIGHT BLUE GLASS; 10% AQUA GREEN GLASS; 20% MIRROR FLECK	SY	50.5		82.1		69.5		82.1		69.5		94.8		94.8		44.2						588				
0000-200-1	COLOR 4: INTEGRAL COLORED CONCRETE WITH BROOM FINISH COLOR TO MATCH SCOFIELD CHROMIX #5130 (SPRING BEIGE) AGGREGATE MIX TO INCLUDE: 60% SEASHELL; 20% CRYSTAL WHITE ONYX; 10% DARK GREEN GLASS; 10% CRYSTAL TEAL GLASS	SY	28.6		32.3		57.2		70		35.3		57.2		69.2		41.4						391				

SUMMARY OF PATTERNED PAVEMENT
(PAY ITEM 523-1)

STATION	SIDE	AREA (SY) P	AREA (SY) F	FIELD BOOK REFERENCE
10+67.00	LT/RT	91		
17+85.00	LT/RT	91		
26+03.00	LT/RT	91		
35+98.00	LT/RT	91		
41+75.00	RT	64		
41+76.00	LT	40		
42+35.00	RT	28		
42+75.00	RT	23		
50+37.00	RT	16		
50+41.00	LT	21		
50+42.00	RT	44		
50+46.00	LT	35		
50+64.00	RT	26		
50+79.00	LT	39		
51+15.00	RT	24		
51+24.00	LT	18		
51+56.00	LT	24		
TOTAL		766		

NOTICE: THE OFFICIAL RECORD OF THIS SHEET IS THE ELECTRONIC FILE SIGNED AND SEALED UNDER RULE 61G10-11.011, F.A.C.

REVISIONS

DATE	DESCRIPTION	DATE	DESCRIPTION

Landscape Architect of Record:
Tammy D. Cook-Weedon, R.L.A. License No. 1328

CALVIN, GIORDANO & ASSOCIATES, INC.
1800 Eller Drive, Suite 600
Fort Lauderdale, Florida 33316
Certificate of Authorization LC00000339
Vendor I.D. No. 65-001-3869

STATE OF FLORIDA
DEPARTMENT OF TRANSPORTATION

ROAD NO.	COUNTY	FINANCIAL PROJECT ID
A1A	BROWARD	428727-1-52-01

SUMMARY OF QUANTITIES

SHEET NO. 12

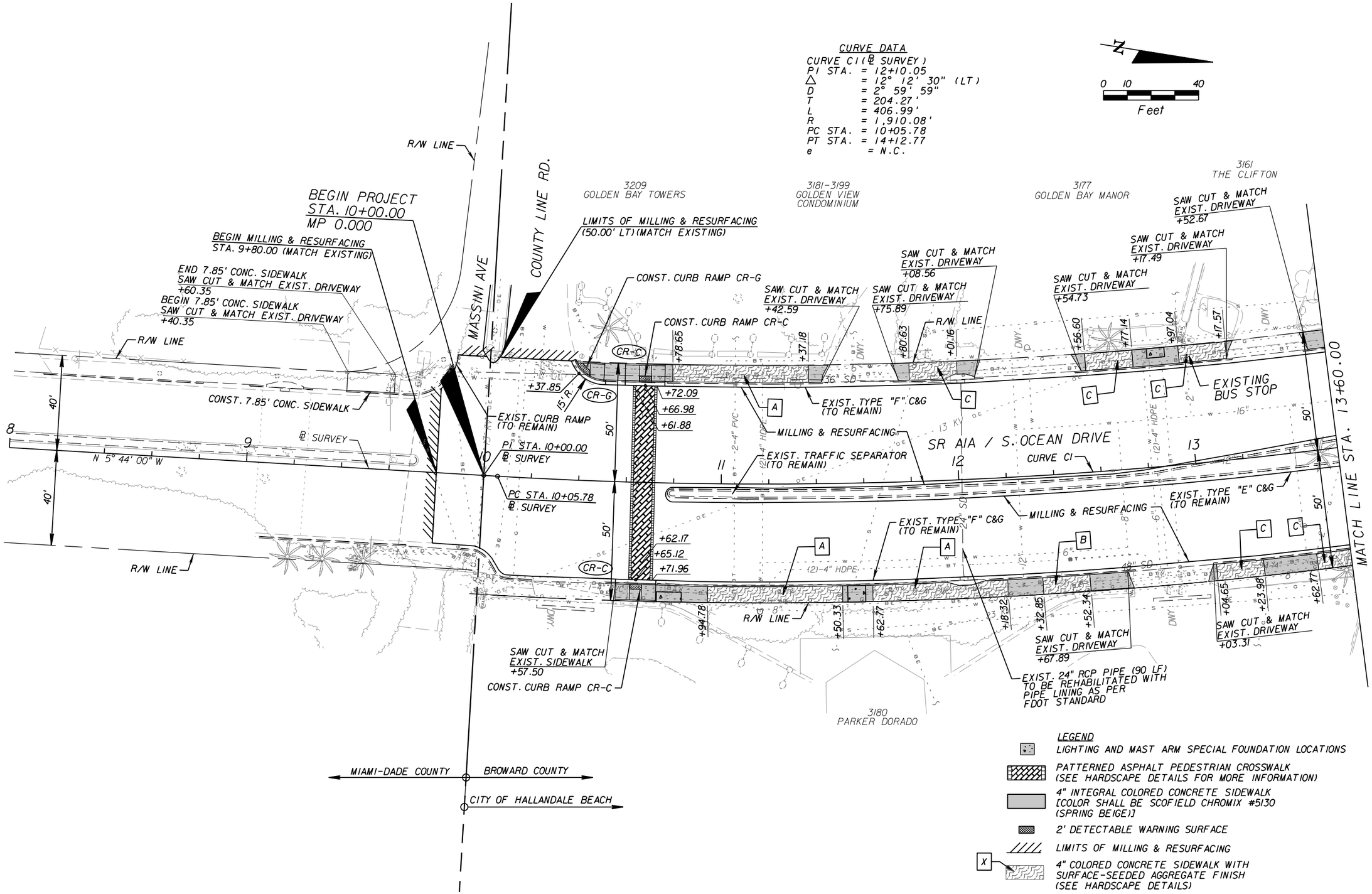

REVISIONS			
DATE	DESCRIPTION	DATE	DESCRIPTION

A&P Consulting Transportation Engineers Corp.
10305 N.W. 41 Street, suite 115
Miami, FL 33178
(305) 592-7283 / fax: (305) 593-1594
CA No. : EB-0007797
Eithel M. Sierra, P.E. No. 55401

STATE OF FLORIDA
DEPARTMENT OF TRANSPORTATION

ROAD NO.	COUNTY	FINANCIAL PROJECT ID
A1A	BROWARD	428727-1-52-01

ROADWAY PLAN

SHEET NO. 13

NOTICE: THE OFFICIAL RECORD OF THIS SHEET IS THE ELECTRONIC FILE SIGNED AND SEALED UNDER RULE 61G15-23.003, F.A.C.

CURVE DATA

CURVE C1 (℄ SURVEY)
PI STA. = 12+10.05
△ = 12° 12' 30" (LT)
D = 2° 59' 59"
T = 204.27'
L = 406.99'
R = 1,910.08'
PC STA. = 10+05.78
PT STA. = 14+12.77
e = N.C.

CURVE DATA

CURVE C2 (℄ SURVEY)
PI STA. = 19+00.90
△ = 21° 32' 27" (RT)
D = 5° 59' 50"
T = 181.74'
L = 359.18'
R = 955.37'
PC STA. = 17+19.16
PT STA. = 20+78.34
e = N.C.

N

0 10 40
Feet

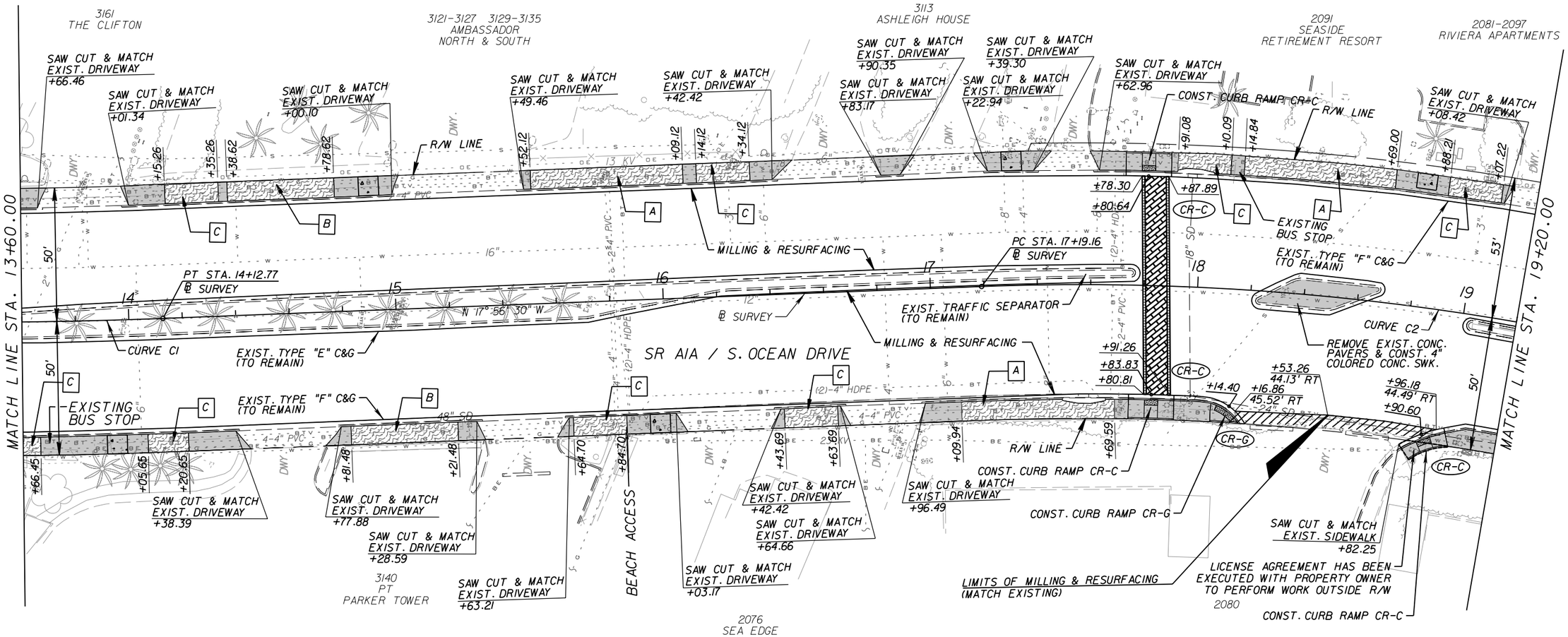

LEGEND

- LIGHTING AND MAST ARM SPECIAL FOUNDATION LOCATIONS
- PATTERNED ASPHALT PEDESTRIAN CROSSWALK (SEE HARDSCAPE DETAILS FOR MORE INFORMATION)
- 4" INTEGRAL COLORED CONCRETE SIDEWALK [COLOR SHALL BE SCOFIELD CHROMIX #5130 (SPRING BEIGE)]
- 2' DETECTABLE WARNING SURFACE
- LIMITS OF MILLING & RESURFACING
- X 4" COLORED CONCRETE SIDEWALK WITH SURFACE-SEEDED AGGREGATE FINISH (SEE HARDSCAPE DETAILS)

NOTICE: THE OFFICIAL RECORD OF THIS SHEET IS THE ELECTRONIC FILE SIGNED AND SEALED UNDER RULE 61G15-23.003, F.A.C.

REVISIONS			
DATE	DESCRIPTION	DATE	DESCRIPTION

A&P Consulting Transportation Engineers Corp.
10305 N.W. 41 Street, suite 115
Miami, FL 33178
(305) 592-7283 / fax: (305) 593-1594
CA No. : EB-0007797
Eithel M. Sierra, P.E. No. 55401

STATE OF FLORIDA
DEPARTMENT OF TRANSPORTATION

ROAD NO.	COUNTY	FINANCIAL PROJECT ID
AIA	BROWARD	428727-1-52-01

ROADWAY PLAN

SHEET NO. 14

CURVE DATA

CURVE C2(℄ SURVEY)
PI STA. = 19+00.90
△ = 21° 32' 27" (RT)
D = 5° 59' 50"
T = 181.74'
L = 359.18'
R = 955.37'
PC STA. = 17+19.16
PT STA. = 20+78.34
e = N.C.

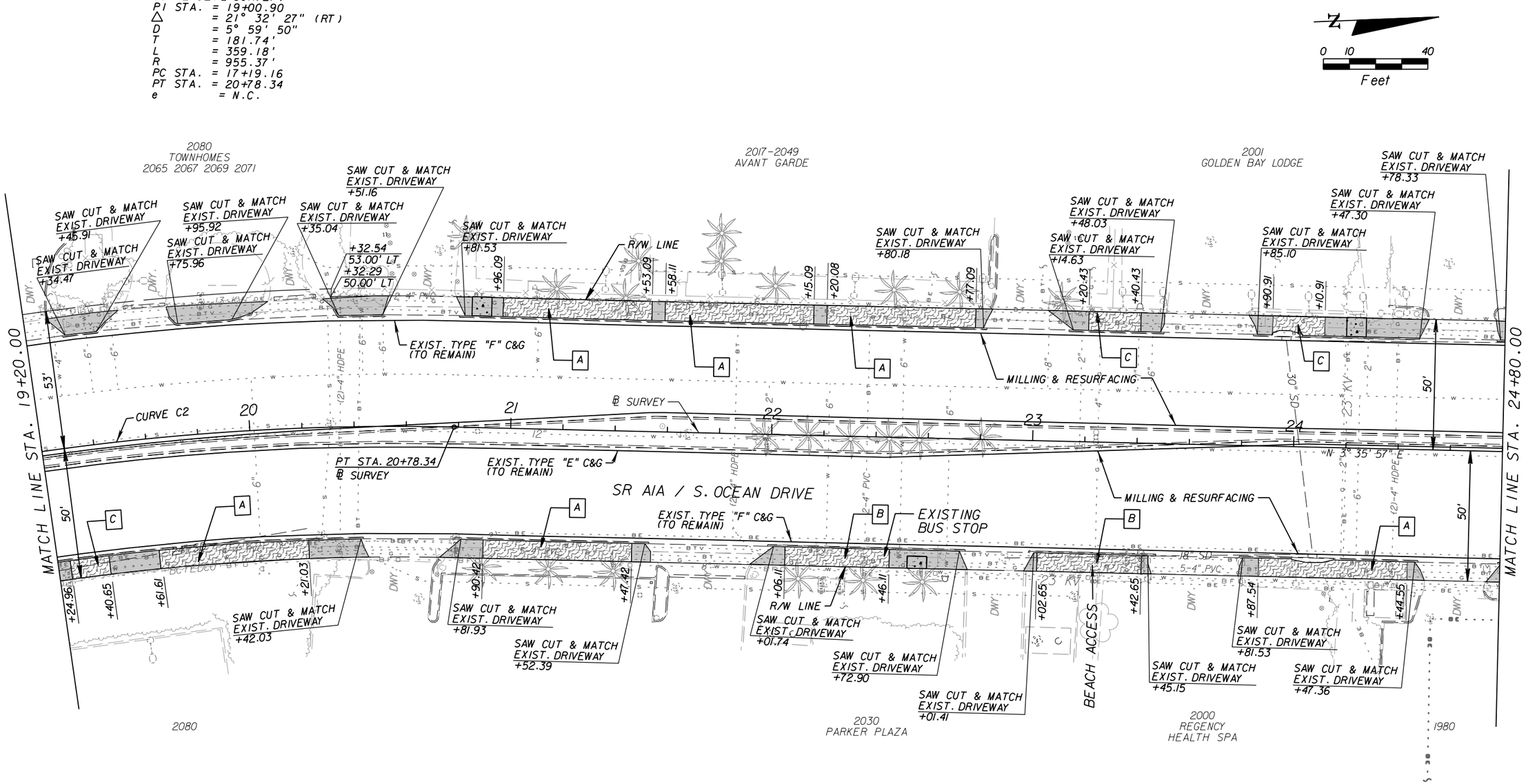

LEGEND

- LIGHTING AND MAST ARM SPECIAL FOUNDATION LOCATIONS
- 4" INTEGRAL COLORED CONCRETE SIDEWALK [COLOR SHALL BE SCOFIELD CHROMIX #5130 (SPRING BEIGE)]
- X — 4" COLORED CONCRETE SIDEWALK WITH SURFACE-SEEDED AGGREGATE FINISH (SEE HARDSCAPE DETAILS)

NOTICE: THE OFFICIAL RECORD OF THIS SHEET IS THE ELECTRONIC FILE SIGNED AND SEALED UNDER RULE 61G15-23.003, F.A.C.

REVISIONS			
DATE	DESCRIPTION	DATE	DESCRIPTION

A&P Consulting Transportation Engineers Corp.
10305 N.W. 41 Street, suite 115
Miami, FL 33178
(305) 592-7283 / fax: (305) 593-1594
CA No. : EB-0007797
Eithel M. Sierra, P.E. No. 55401

STATE OF FLORIDA
DEPARTMENT OF TRANSPORTATION

ROAD NO.	COUNTY	FINANCIAL PROJECT ID
AIA	BROWARD	428727-1-52-01

ROADWAY PLAN

SHEET NO. 15

CURVE DATA

CURVE C3(℄ SURVEY)
PI STA. = 28+96.60
△ = 1° 20' 00" (RT)
D = 0° 30' 00"
T = 133.34'
L = 266.67'
R = 11,459.20'
PC STA. = 27+63.26
PT STA. = 30+29.93
e = N.C.

N
0 10 40
Feet

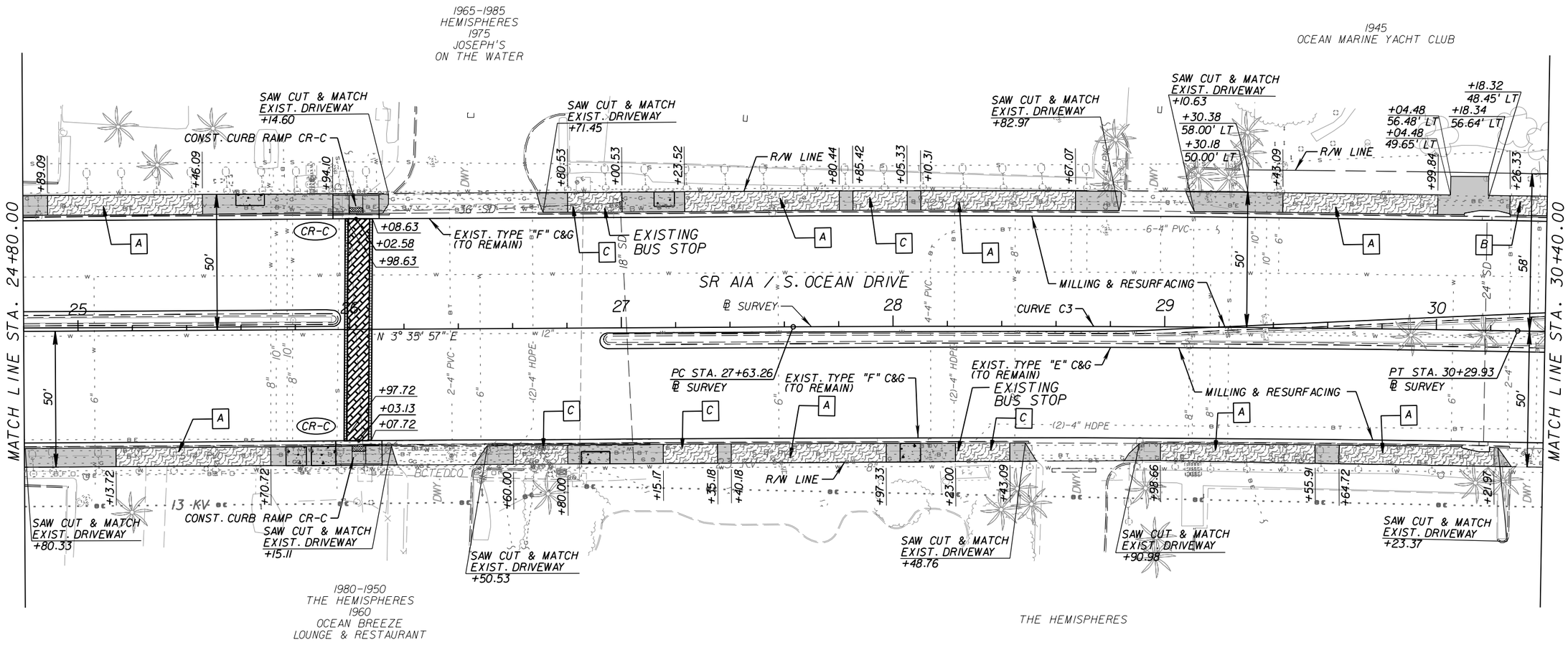

LEGEND

- LIGHTING AND MAST ARM SPECIAL FOUNDATION LOCATIONS
- PATTERNED ASPHALT PEDESTRIAN CROSSWALK (SEE HARDSCAPE DETAILS FOR MORE INFORMATION)
- 4" INTEGRAL COLORED CONCRETE SIDEWALK [COLOR SHALL BE SCOFIELD CHROMIX #5130 (SPRING BEIGE)]
- 2' DETECTABLE WARNING SURFACE
- X — 4" COLORED CONCRETE SIDEWALK WITH SURFACE-SEEDED AGGREGATE FINISH (SEE HARDSCAPE DETAILS)

REVISIONS			
DATE	DESCRIPTION	DATE	DESCRIPTION

A&P Consulting Transportation Engineers Corp.
10305 N.W. 41 Street, suite 115
Miami, FL 33178
(305) 592-7283 / fax: (305) 593-1594
CA No. : EB-0007797
Eithel M. Sierra, P.E. No. 55401

STATE OF FLORIDA
DEPARTMENT OF TRANSPORTATION

ROAD NO.	COUNTY	FINANCIAL PROJECT ID
A1A	BROWARD	428727-1-52-01

ROADWAY PLAN

SHEET NO. 16

NOTICE: THE OFFICIAL RECORD OF THIS SHEET IS THE ELECTRONIC FILE SIGNED AND SEALED UNDER RULE 61G15-23.003, F.A.C.

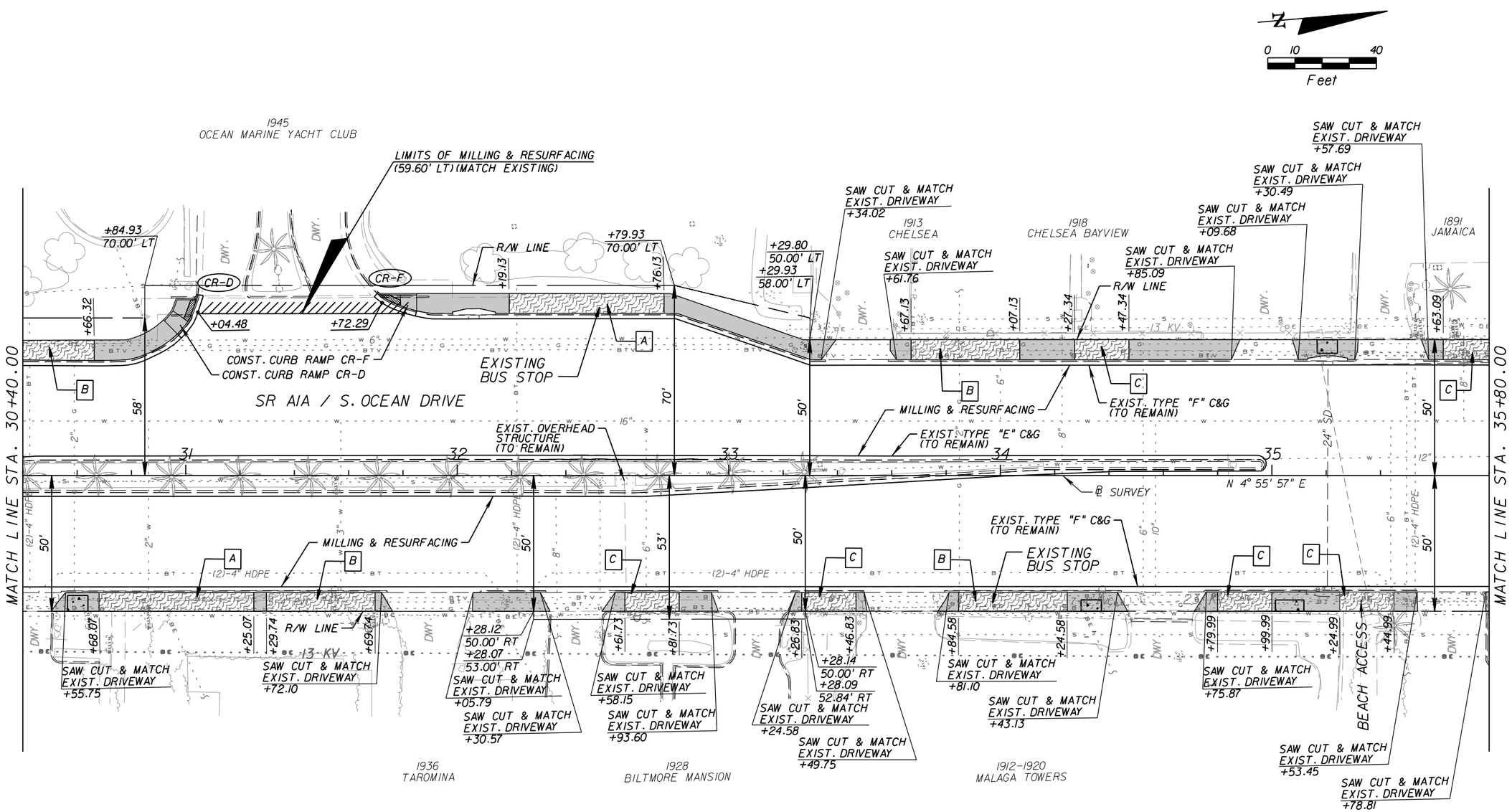

REVISIONS			
DATE	DESCRIPTION	DATE	DESCRIPTION

A&P Consulting Transportation Engineers Corp.
10305 N.W. 41 Street, suite 115
Miami, FL 33178
(305) 592-7283 / fax: (305) 593-1594
CA No. : EB-0007797
Eithel M. Sierra, P.E. No. 55401

STATE OF FLORIDA
DEPARTMENT OF TRANSPORTATION

ROAD NO.	COUNTY	FINANCIAL PROJECT ID
AIA	BROWARD	428727-1-52-01

ROADWAY PLAN

SHEET NO. 17

NOTICE: THE OFFICIAL RECORD OF THIS SHEET IS THE ELECTRONIC FILE SIGNED AND SEALED UNDER RULE 61G15-23.003, F.A.C.

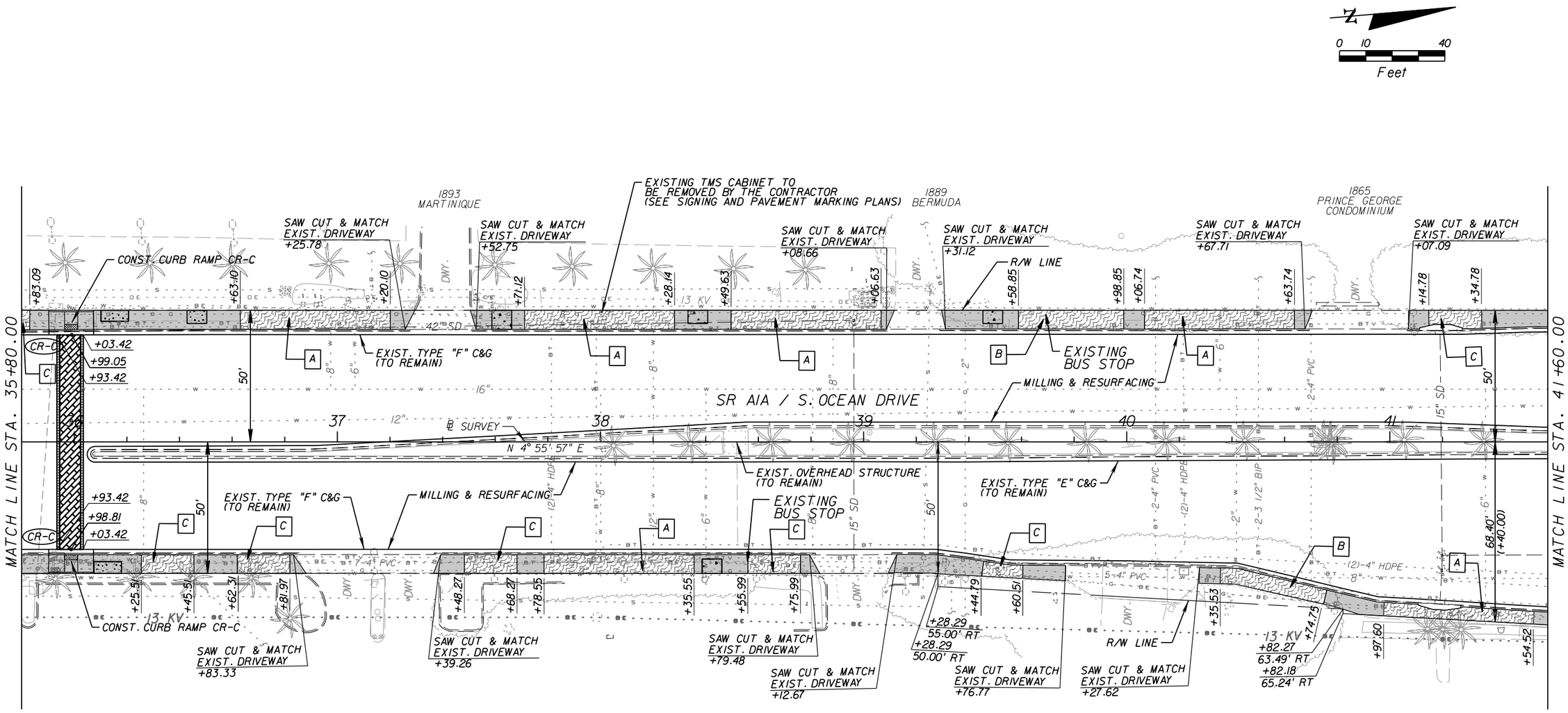

LEGEND

- LIGHTING AND MAST ARM SPECIAL FOUNDATION LOCATIONS
- PATTERNED ASPHALT PEDESTRIAN CROSSWALK (SEE HARDSCAPE DETAILS FOR MORE INFORMATION)
- 4" INTEGRAL COLORED CONCRETE SIDEWALK [COLOR SHALL BE SCOFIELD CHROMIX #5130 (SPRING BEIGE)]
- 2' DETECTABLE WARNING SURFACE
- X — 4" COLORED CONCRETE SIDEWALK WITH SURFACE-SEEDED AGGREGATE FINISH (SEE HARDSCAPE DETAILS)

REVISIONS			
DATE	DESCRIPTION	DATE	DESCRIPTION

A&P Consulting Transportation Engineers Corp.
10305 N.W. 41 Street, suite 115
Miami, FL 33178
(305) 592-7283 / fax: (305) 593-1594
CA No. : EB-0007797
Eithel M. Sierra, P.E. No. 55401

STATE OF FLORIDA
DEPARTMENT OF TRANSPORTATION

ROAD NO.	COUNTY	FINANCIAL PROJECT ID
AIA	BROWARD	428727-1-52-01

ROADWAY PLAN

SHEET NO. 18

NOTICE: THE OFFICIAL RECORD OF THIS SHEET IS THE ELECTRONIC FILE SIGNED AND SEALED UNDER RULE 61G15-23.003, F.A.C.

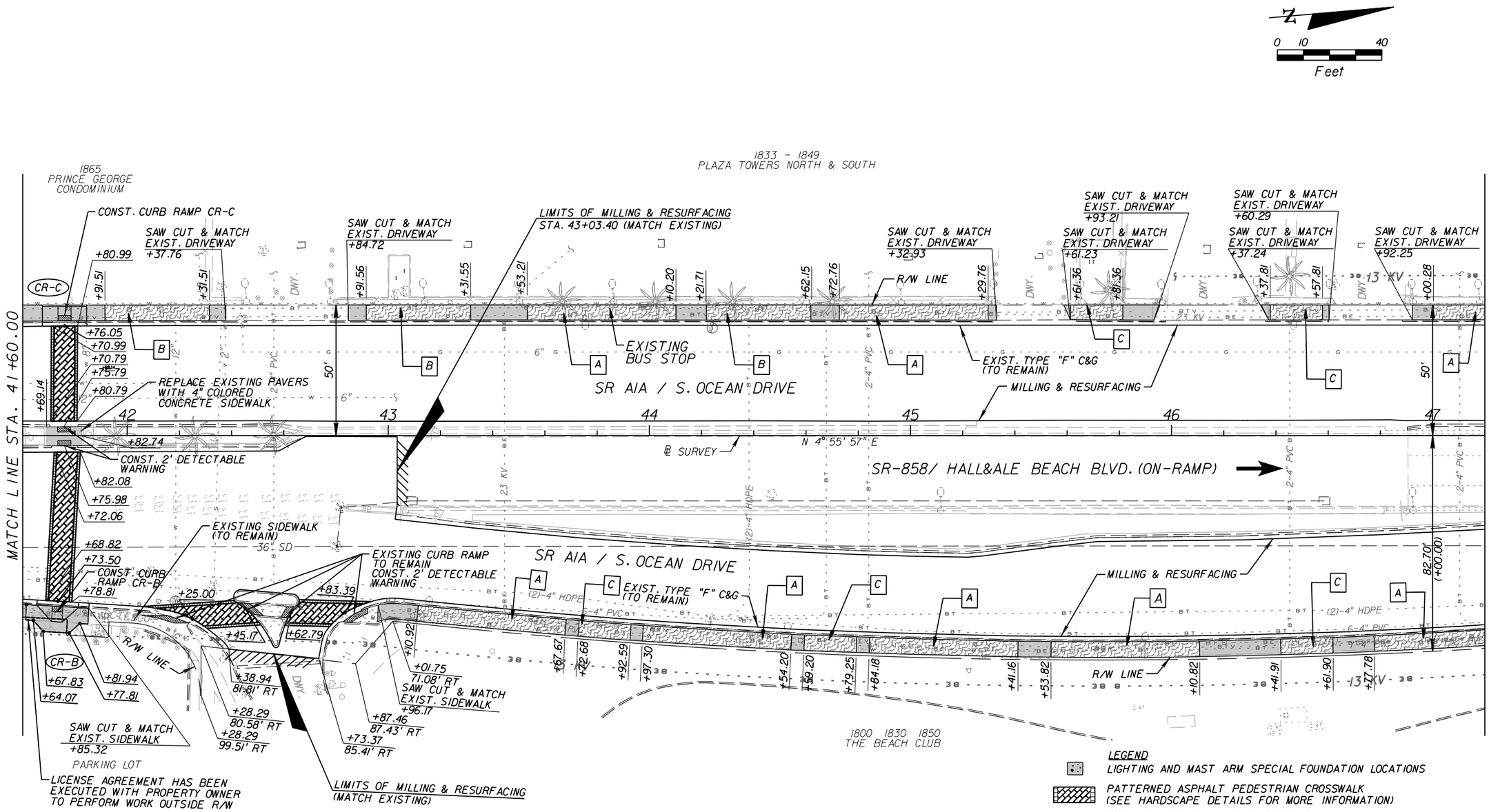

NOTICE: THE OFFICIAL RECORD OF THIS SHEET IS THE ELECTRONIC FILE SIGNED AND SEALED UNDER RULE 61G15-23.003, F.A.C.

REVISIONS			
DATE	DESCRIPTION	DATE	DESCRIPTION

A&P Consulting Transportation Engineers Corp.
10305 N.W. 41 Street, suite 115
Miami, FL 33178
(305) 592-7283 / fax: (305) 593-1594
CA No. : EB-0007797
Eithel M. Sierra, P.E. No. 55401

STATE OF FLORIDA
DEPARTMENT OF TRANSPORTATION

ROAD NO.	COUNTY	FINANCIAL PROJECT ID
AIA	BROWARD	428727-1-52-01

ROADWAY PLAN

SHEET NO. 19

emsierra 12/5/2013 11:14:28 AM H:\e\Projects\428727\5201\roadway\planrd07.dgn

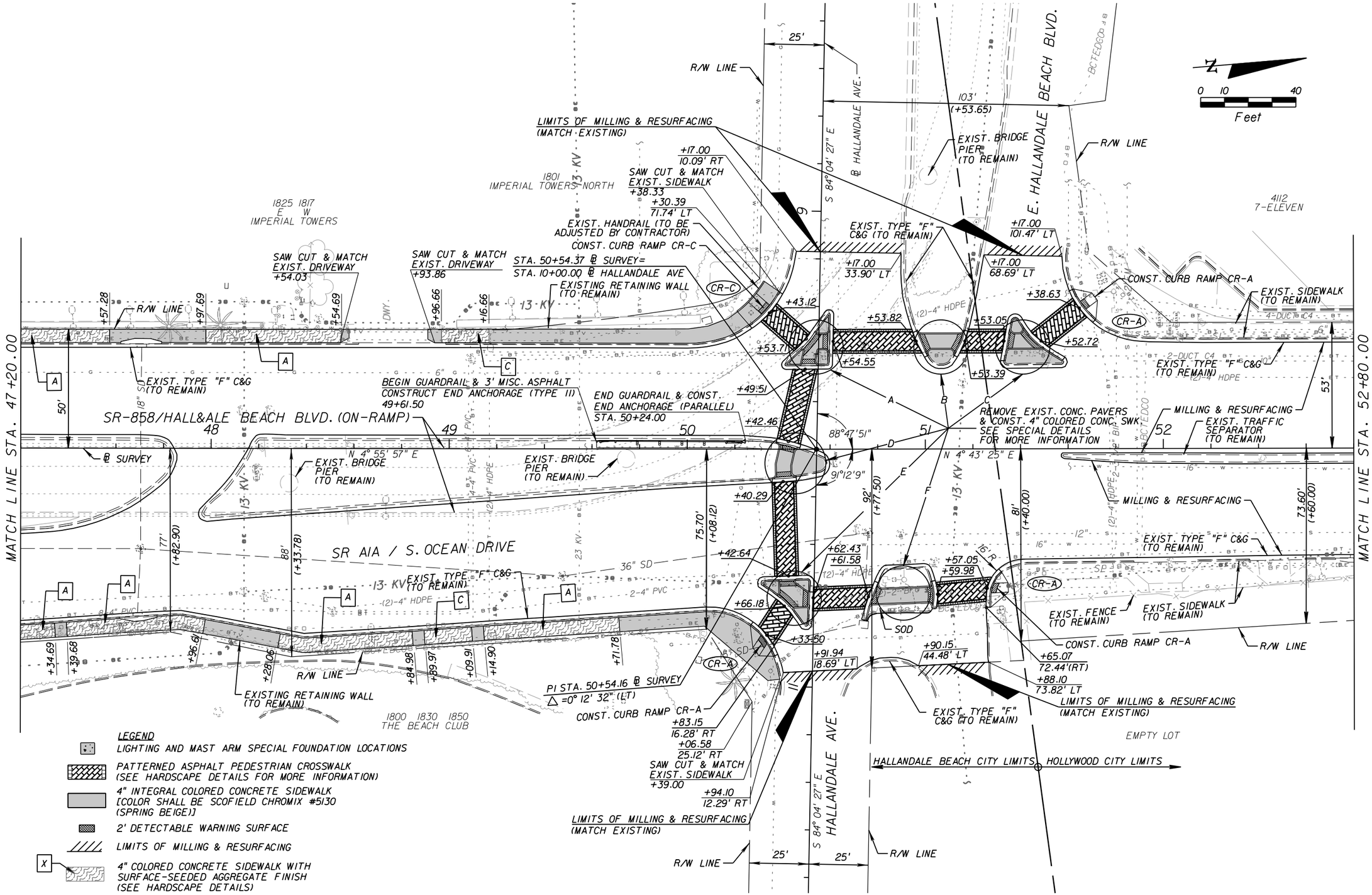

LEGEND

- LIGHTING AND MAST ARM SPECIAL FOUNDATION LOCATIONS
- PATTERNED ASPHALT PEDESTRIAN CROSSWALK (SEE HARDSCAPE DETAILS FOR MORE INFORMATION)
- 4" INTEGRAL COLORED CONCRETE SIDEWALK [COLOR SHALL BE SCOFIELD CHROMIX #5130 (SPRING BEIGE)]
- 2' DETECTABLE WARNING SURFACE
- LIMITS OF MILLING & RESURFACING
- X 4" COLORED CONCRETE SIDEWALK WITH SURFACE-SEEDED AGGREGATE FINISH (SEE HARDSCAPE DETAILS)

REVISIONS			
DATE	DESCRIPTION	DATE	DESCRIPTION

A&P Consulting Transportation Engineers Corp.
10305 N.W. 41 Street, suite 115
Miami, FL 33178
(305) 592-7283 / fax: (305) 593-1594
CA No. : EB-0007797
Eithel M. Sierra, P.E. No. 55401

STATE OF FLORIDA
DEPARTMENT OF TRANSPORTATION

ROAD NO.	COUNTY	FINANCIAL PROJECT ID
A1A	BROWARD	428727-1-52-01

ROADWAY PLAN

SHEET NO. 20

NOTICE: THE OFFICIAL RECORD OF THIS SHEET IS THE ELECTRONIC FILE SIGNED AND SEALED UNDER RULE 61G15-23.003, F.A.C.

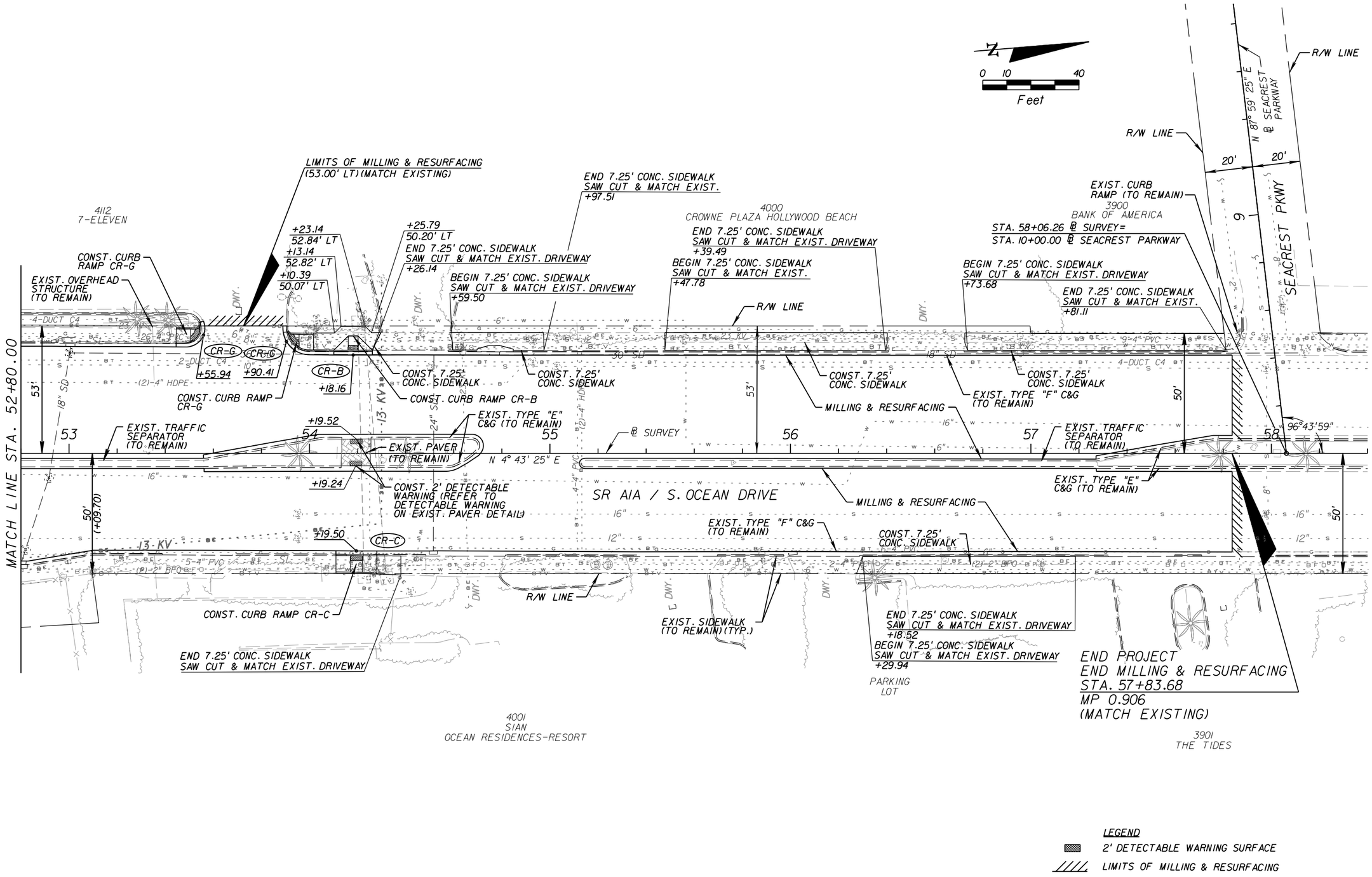

LEGEND

2' DETECTABLE WARNING SURFACE

LIMITS OF MILLING & RESURFACING

NOTICE: THE OFFICIAL RECORD OF THIS SHEET IS THE ELECTRONIC FILE SIGNED AND SEALED UNDER RULE 61G15-23.003, F.A.C.

REVISIONS			
DATE	DESCRIPTION	DATE	DESCRIPTION

A&P Consulting Transportation Engineers Corp.
10305 N.W. 41 Street, suite 115
Miami, FL 33178
(305) 592-7283 / fax: (305) 593-1594
CA No. : EB-0007797
Eithel M. Sierra, P.E. No. 55401

STATE OF FLORIDA
DEPARTMENT OF TRANSPORTATION

ROAD NO.	COUNTY	FINANCIAL PROJECT ID
AIA	BROWARD	428727-1-52-01

ROADWAY PLAN

SHEET NO. 21

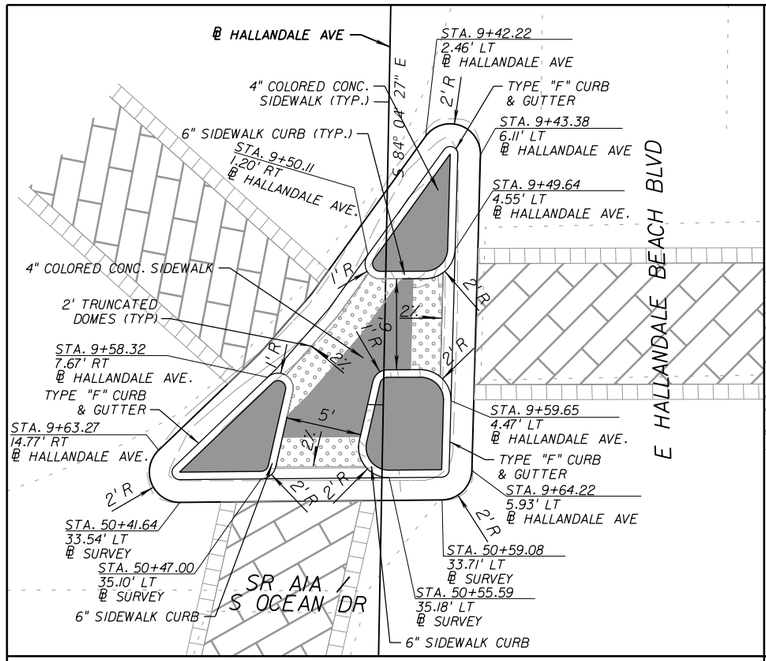

SPECIAL DETAIL A

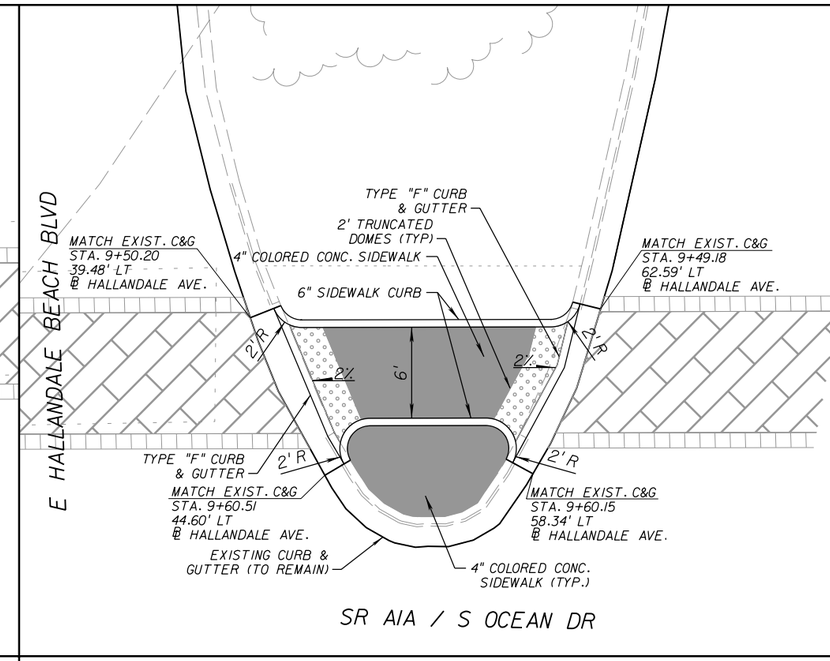

SPECIAL DETAIL B

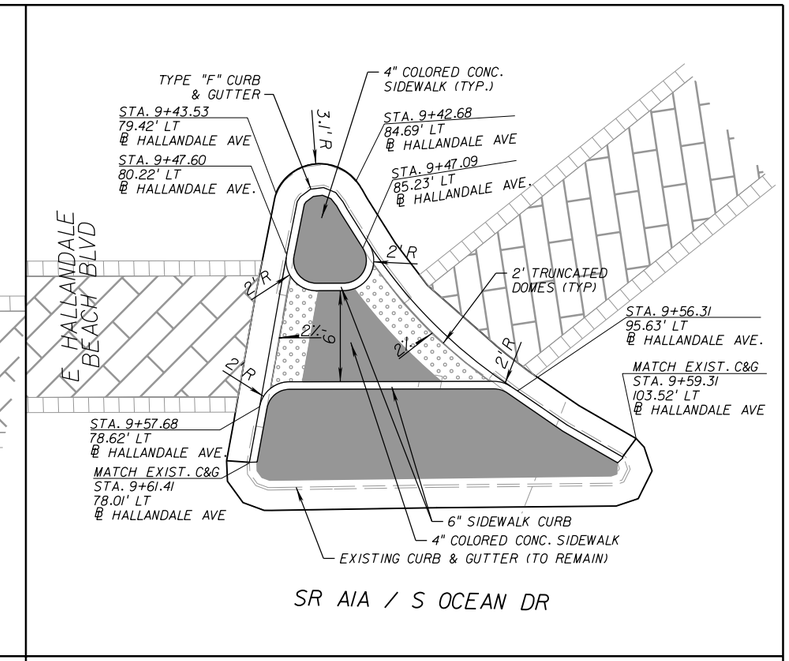

SPECIAL DETAIL C

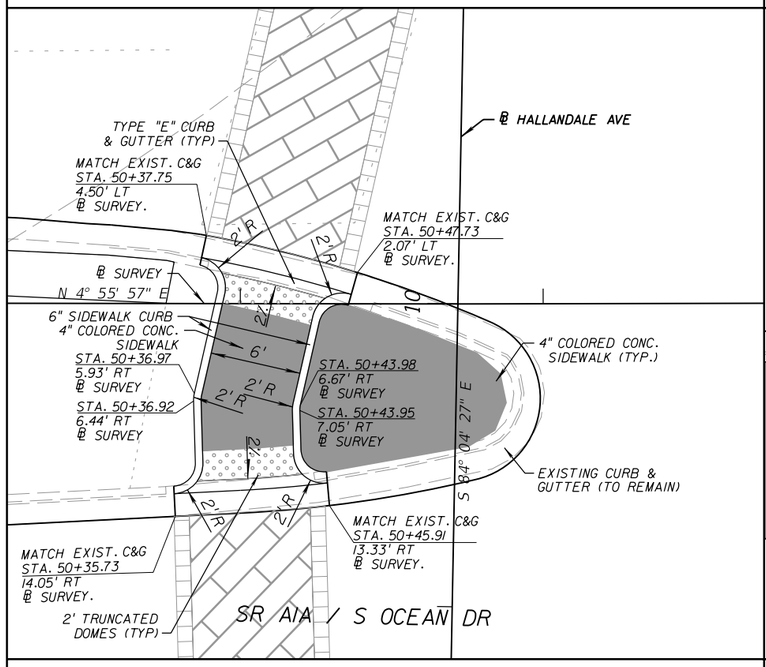

SPECIAL DETAIL D

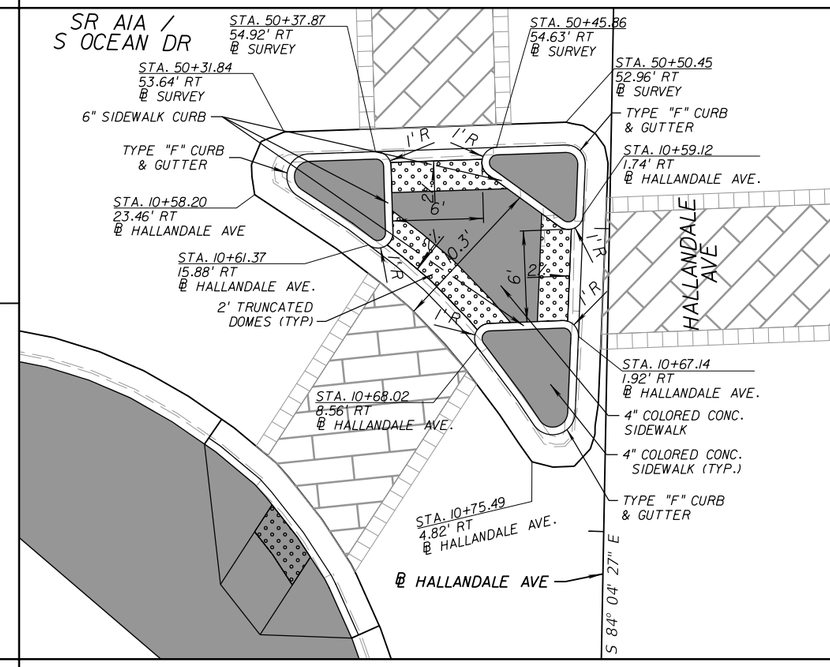

SPECIAL DETAIL E

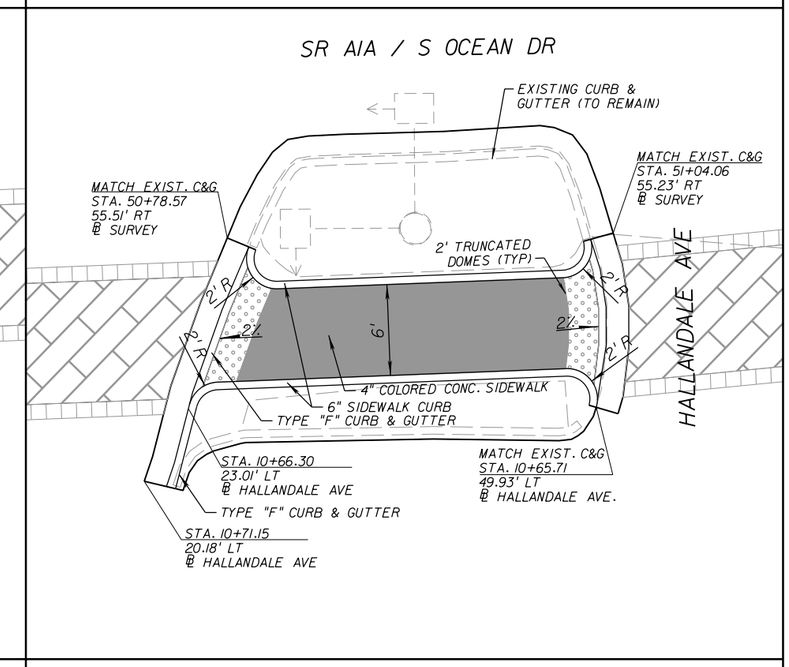

SPECIAL DETAIL F

REVISIONS			
DATE	DESCRIPTION	DATE	DESCRIPTION

A&P Consulting Transportation Engineers Corp.
10305 N.W. 41 Street, suite 115
Miami, FL 33178
(305) 592-7283 / fax: (305) 593-1594
CA No. : EB-0007797
Eithel M. Sierra, P.E. No. 55401

STATE OF FLORIDA
DEPARTMENT OF TRANSPORTATION

ROAD NO.	COUNTY	FINANCIAL PROJECT ID
AIA	BROWARD	428727-1-52-01

SPECIAL DETAILS

SHEET NO. 22

NOTICE: THE OFFICIAL RECORD OF THIS SHEET IS THE ELECTRONIC FILE SIGNED AND SEALED UNDER RULE 61G15-23.003, F.A.C.

NOTE:

FOR JOINT INFORMATION, REFER TO INDEX 310, SHEET 1 OF 2.

PATTERN STYLE A

N.T.S.

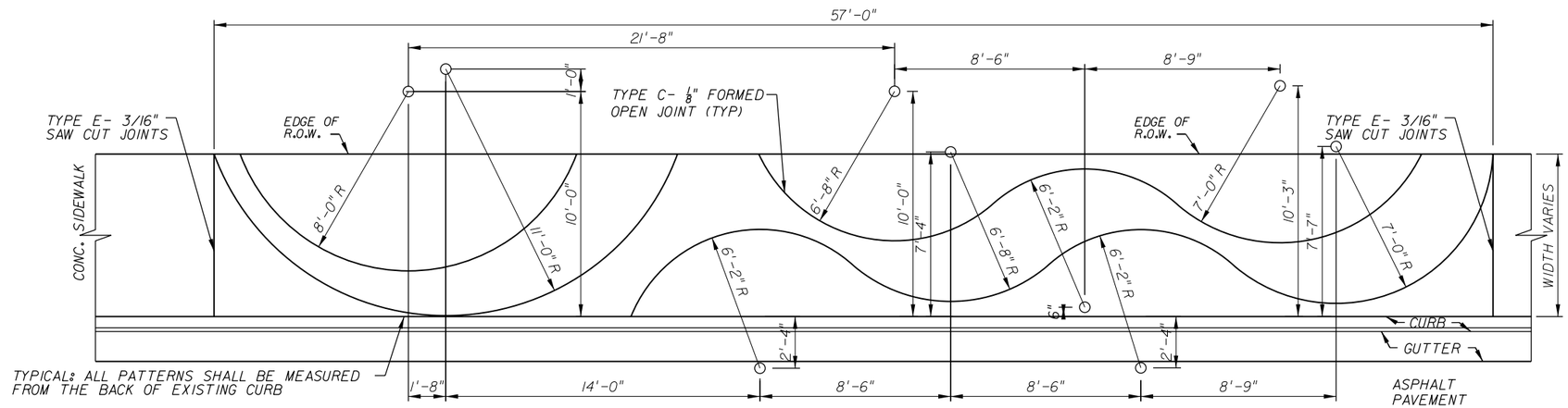

STATE ROAD AIA

DIRECTION OF TRAFFIC FLOW

PATTERN STYLE B

N.T.S.

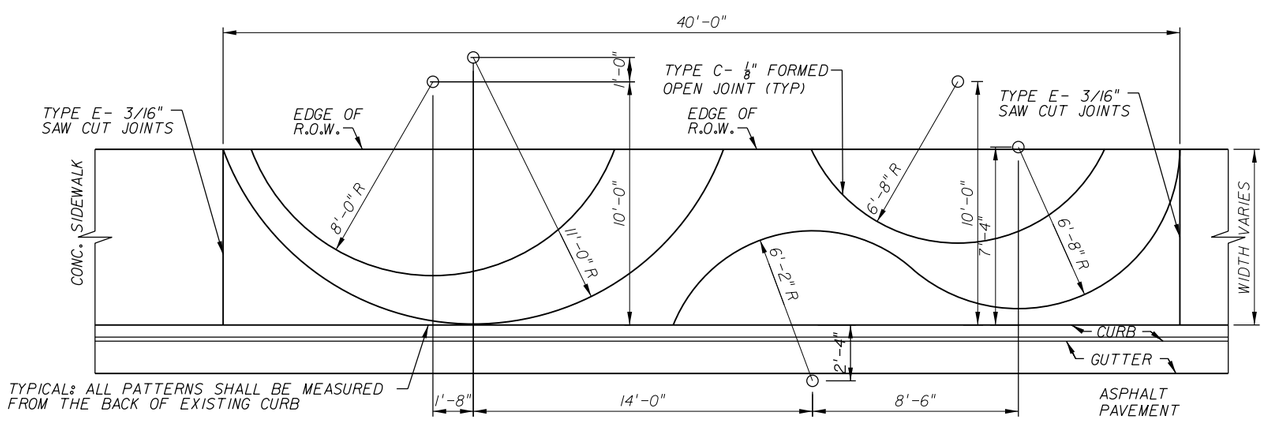

STATE ROAD AIA

DIRECTION OF TRAFFIC FLOW

PATTERN STYLE C

N.T.S.

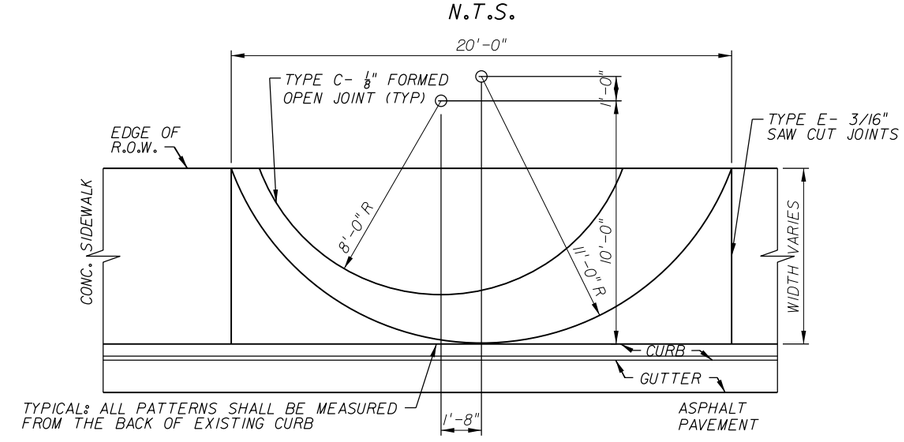

STATE ROAD AIA

DIRECTION OF TRAFFIC FLOW

NOTICE: THE OFFICIAL RECORD OF THIS SHEET IS THE ELECTRONIC FILE SIGNED AND SEALED UNDER RULE 61G10-11.011, F.A.C.

REVISIONS			
DATE	DESCRIPTION	DATE	DESCRIPTION

Landscape Architect of Record:
Tammy D. Cook-Weedon, R.L.A. License No. 1328

CALVIN, GIORDANO & ASSOCIATES, INC.
1800 Eller Drive, Suite 600
Fort Lauderdale, Florida 33316
Certificate of Authorization LC00000339
Vendor I.D. No. 65-001-3869

STATE OF FLORIDA
DEPARTMENT OF TRANSPORTATION

ROAD NO.	COUNTY	FINANCIAL PROJECT ID
A1A	BROWARD	428727-1-52-01

HARDSCAPE DETAILS

SHEET NO. 23

emslerra 12/5/2013 11:14:32 AM H:\e\Projects\42872715201\roadway\SPDTRD01.DGN

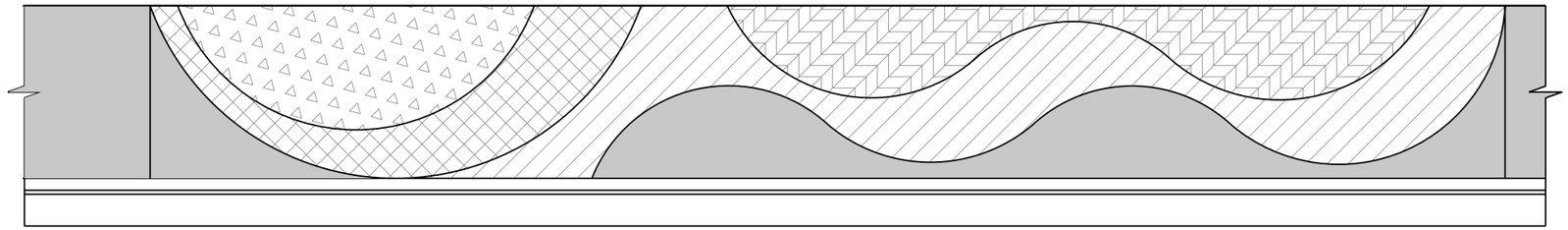

COLOR DISTRIBUTION KEY
PATTERN STYLE A

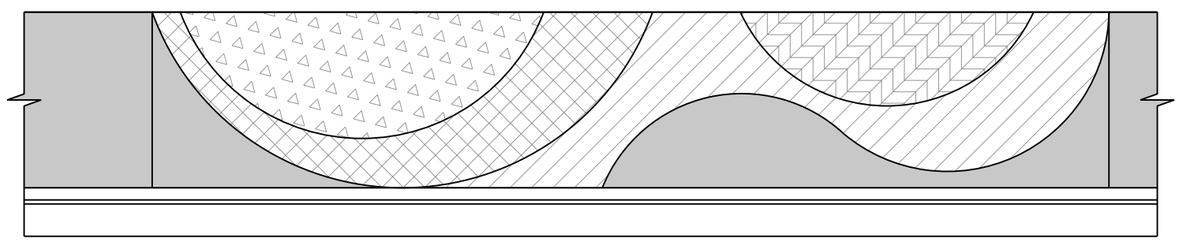

COLOR DISTRIBUTION KEY
PATTERN STYLE B

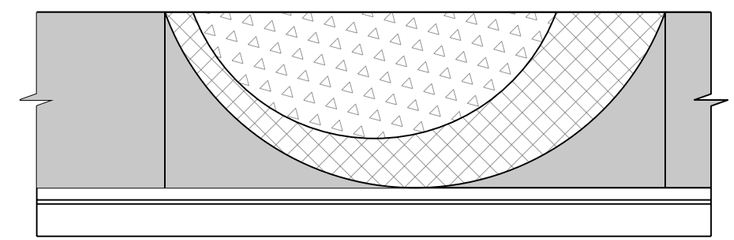

COLOR DISTRIBUTION KEY
PATTERN STYLE C

LEGEND:

INTEGRAL COLORED CONCRETE WITH BROOM FINISH
COLOR TO MATCH SCOFIELD CHROMIX #5130 (SPRING BEIGE)

COLOR 1:
INTEGRAL COLORED CONCRETE WITH BROOM FINISH
COLOR TO MATCH SCOFIELD CHROMIX #1266 (COOL GRAY)
AGGREGATE MIX TO INCLUDE: 60% DARK BLUE GLASS; 20% TURQUOISE GLASS; 10% CRYSTAL TEAL GLASS; 10% SEASHELL

COLOR 2:
INTEGRAL COLORED CONCRETE WITH BROOM FINISH
COLOR TO MATCH SCOFIELD CHROMIX #1266 (COOL GRAY)
AGGREGATE MIX TO INCLUDE: 10% DARK BLUE GLASS; 50% TURQUOISE GLASS; 20% CRYSTAL TEAL GLASS; 10% SEASHELL; 10% MIRROR FLECK

COLOR 3:
INTEGRAL COLORED CONCRETE WITH BROOM FINISH
COLOR TO MATCH SCOFIELD CHROMIX #3987 (PORCELAIN GRAY)
AGGREGATE MIX TO INCLUDE: 50% CRYSTAL WHITE ONYX; 20% LIGHT BLUE GLASS; 10% AQUA GREEN GLASS; 20% MIRROR FLECK

COLOR 4:
INTEGRAL COLORED CONCRETE WITH BROOM FINISH
COLOR TO MATCH SCOFIELD CHROMIX #5130 (SPRING BEIGE)
AGGREGATE MIX TO INCLUDE: 60% SEASHELL; 20% CRYSTAL WHITE ONYX; 10% DARK GREEN GLASS; 10% CRYSTAL TEAL GLASS

NOTES:

1. ALL CONCRETE SIDEWALK SHALL BE CONSTRUCTED TO MATCH COLOR SCOFIELD CHROMIX ADMIXTURES FOR COLOR-CONDITIONED CONCRETE COLOR CHART A-312.10, UNLESS OTHERWISE INDICATED ON ROADWAY PLANS.
2. COLORED GLASS SHALL MATCH COLOR AMERICAN SPECIALTY GLASS COLOR CHART AVAILABLE AT HTTP://WWW.AMERICANSPECIALTYGLASS.COM/LANDSCAPE/
3. STONE AGGREGATES SHALL MATCH COLOR KAFKA GRANITE LLC SAMPLES AVAILABLE AT HTTP://KAFKAGRANITE.COM/ARCHITECTURAL_AGGREGATE_COLORS/INDEX.PHP

NOTICE: THE OFFICIAL RECORD OF THIS SHEET IS THE ELECTRONIC FILE SIGNED AND SEALED UNDER RULE 61G10-11.011, F.A.C.

REVISIONS			
DATE	DESCRIPTION	DATE	DESCRIPTION

Landscape Architect of Record:
Tammy D. Cook-Weedon, R.L.A. License No. 1328

CALVIN, GIORDANO & ASSOCIATES, INC.
1800 Eller Drive, Suite 600
Fort Lauderdale, Florida 33316
Certificate of Authorization LC00000339
Vendor I.D. No. 65-001-3869

STATE OF FLORIDA
DEPARTMENT OF TRANSPORTATION

ROAD NO.	COUNTY	FINANCIAL PROJECT ID
A1A	BROWARD	428727-1-52-01

HARDSCAPE DETAILS

SHEET NO.
24

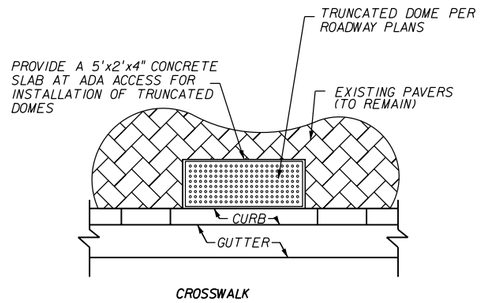

DETECTABLE WARNING ON EXISTING PAVERS DETAIL

N.T.S.

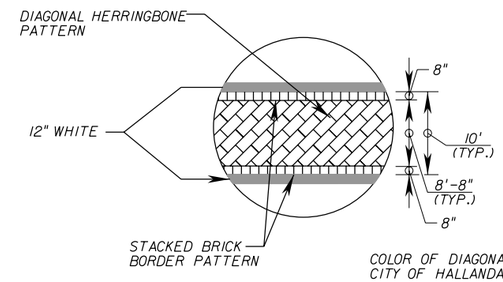

COLOR OF DIAGONAL HERRINGBONE AND BRICK BORDER PATTERNS TO MATCH CITY OF HALLANDALE BEACH CUSTOM COLOR: "BEACH RED".

PATTERNED ASPHALT PEDESTRIAN CROSSWALK DETAIL

N.T.S.

NOTICE: THE OFFICIAL RECORD OF THIS SHEET IS THE ELECTRONIC FILE SIGNED AND SEALED UNDER RULE 61G15-23.003, F.A.C.

REVISIONS			
DATE	DESCRIPTION	DATE	DESCRIPTION

A&P Consulting Transportation Engineers Corp.
10305 N.W. 41 Street, suite 115
Miami, FL 33178
(305) 592-7283 / fax: (305) 593-1594
CA No. : EB-0007797
Eithel M. Sierra, P.E. No. 55401

STATE OF FLORIDA
DEPARTMENT OF TRANSPORTATION

ROAD NO.	COUNTY	FINANCIAL PROJECT ID
A1A	BROWARD	428727-1-52-01

HARDSCAPE DETAILS

SHEET NO.
25

THE FOLLOWING NARRATIVE OF THE STORM WATER POLLUTION PREVENTION PLAN CONTAINS REFERENCES TO THE STANDARD SPECIFICATIONS FOR ROAD AND BRIDGE CONSTRUCTION, THE DESIGN STANDARDS, AND OTHER SHEETS OF THESE CONSTRUCTION PLANS. THE FIRST SHEET OF THE CONSTRUCTION PLANS (CALLED THE KEY SHEET) CONTAINS AN INDEX TO THE OTHER SHEETS. THE COMPLETE STORM WATER POLLUTION PREVENTION PLAN INCLUDES:

A) THE FOLLOWING NARRATIVE AND REFERENCED DOCUMENTS,
B) THE CONTRACTOR'S APPROVED EROSION AND SEDIMENT CONTROL PLAN REQUIRED BY SPECIFICATION SECTION 104, AND
C) REPORTS OF INSPECTIONS MADE DURING CONSTRUCTION.

1.0 SITE DESCRIPTION:

1.A. NATURE OF CONSTRUCTION ACTIVITY:

THE PROJECT INVOLVES IMPROVEMENTS TO SR A1A/SOUTH OCEAN DRIVE FROM MIAMI DADE/BROWARD COUNTY LINE (MP 0.00) TO SEACREST PARKWAY (MP 0.906) INCLUDING MILLING & RESURFACING, SIDEWALK, SIGNING & PAVEMENT MARKING, SIGNALIZATION, AND DECORATIVE LIGHTING.

TOTAL DISTANCE OF 0.906 MILES.

1.B. SEQUENCE OF MAJOR SOIL DISTURBING ACTIVITIES:

IN THE SECTION 104 EROSION & SEDIMENT CONTROL PLAN, THE CONTRACTOR SHALL PROVIDE A DETAILED SEQUENCE OF CONSTRUCTION FOR ALL CONSTRUCTION ACTIVITIES. THE CONTRACTOR SHALL FOLLOW THE SEQUENCE OF MAJOR ACTIVITIES GIVEN DESCRIBED BELOW, UNLESS THE CONTRACTOR PROPOSES A DIFFERENT SEQUENCE THAT IS EQUAL OR BETTER AT CONTROLLING EROSION AND TRAPPING SEDIMENT AND IS APPROVED BY THE ENGINEER.

INSTALL PERIMETER EROSION AND SEDIMENT CONTROLS AFTER CLEARING AND GRUBBING NECESSARY FOR INSTALLATION OF CONTROLS BUT BEFORE CLEARING AND GRUBBING OTHER AREAS OF THE SITE.

1. CLEARING AND GRUBBING.

2. EARTHWORK ASSOCIATED WITH DECORATIVE LIGHTING, SIGNALIZATION, AND SIDEWALK REPLACEMENT.

1.C. AREA ESTIMATES:

TOTAL SITE AREA: 9.62 AC.
TOTAL AREA TO BE DISTURBED: 1.02 AC.

1.D. QUALITY OF EXISTING STORM WATER DISCHARGE

RUNOFF COEFFICIENTS:
BEFORE: 0.82
DURING: 0.83
AFTER: 0.84

SOILS DATA: THE RESULTS OF THE MAST ARM CORE BORINGS ALONG THE ROADWAY ARE SHOWN IN THE REPORT OF CORE BORINGS SHEET(S). THE NUMBERS FOR THESE ARE IDENTIFIED ON THE KEY SHEET OF THESE CONSTRUCTION PLANS (SEE SIGNALIZATION PLANS). IN GENERAL, THE SOILS ARE FINE SANDS.

OUTFALL INFORMATION: THERE ARE 3 OUTFALLS WITHIN THE PROJECT:

1- DESCRIPTION: EXISTING ENDWALL AT STA. 9+95.00 OFFSET 880' LT (SR A1A)
RECEIVING WATER NAME: INTERCOSTAL WATERWAY

2- DESCRIPTION: EXISTING ENDWALL AT STA. 35+10.00 OFFSET 610' LT (SR A1A)
RECEIVING WATER NAME: INTERCOSTAL WATERWAY

3- DESCRIPTION: EXISTING ENDWALL AT STA. 51+04.50 OFFSET 630' LT (SR A1A)
RECEIVING WATER NAME: INTERCOSTAL WATERWAY

1.E. SITE MAP:

THE CONSTRUCTION PLANS ARE BEING USED AS THE SITE MAPS. THE LOCATION OF THE REQUIRED INFORMATION IS DESCRIBED BELOW. THE SHEET NUMBERS FOR THE PLAN SHEETS REFERENCED BELOW ARE IDENTIFIED ON THE KEY SHEET OF THESE CONSTRUCTION PLANS.

* APPROXIMATE SLOPES: THE SLOPES OF THE SITE CAN BE SEEN IN THE TYPICAL SECTION SHEETS.

* AREAS OF SOIL DISTURBANCE: THE AREAS TO BE DISTURBED ARE INDICATED ON THE PLAN SHEETS. ANY AREAS WHERE PERMANENT FEATURES ARE SHOWN TO BE CONSTRUCTED ABOVE OR BELOW GROUND WILL BE DISTURBED.

* AREAS NOT TO BE DISTURBED: THE MILLING AND RESURFACING ACTIVITIES WILL NOT BE DISTURBING THE SOIL.

* LOCATIONS OF CONTROLS: THE TEMPORARY CONTROLS (INLET PROTECTION AND PERIMETER CONTROL) WILL BE LOCATED ON ALL EXISTING INLETS. TABLES PROVIDING SUMMARIES OF TEMPORARY EROSION AND SEDIMENT CONTROL ITEMS ARE PROVIDED IN THE SUMMARY OF QUANTITIES SHEETS.

* SURFACE WATERS: THE ONLY SURFACE WATERS NEAR THE SITE IS THE INTERCOSTAL WATERWAY.

* DISCHARGE POINTS TO SURFACE WATERS: LOCATED AT THE AFOREMENTIONED OUTFALLS.

1.F. RECEIVING WATERS:

THE EXISTING DRAINAGE SYSTEM DISCHARGES TO THE INTERCOSTAL WATERWAY, LOCATED DIRECTLY WEST OF THE PROJECT LIMITS.

2.0 CONTROLS:

2.A. EROSION AND SEDIMENT CONTROLS:

IN THE SECTION 104 EROSION & SEDIMENT CONTROL PLAN, THE CONTRACTOR SHALL DESCRIBE THE PROPOSED STABILIZATION AND STRUCTURAL PRACTICES BASED ON THE CONTRACTOR'S PROPOSED TRAFFIC CONTROL PLAN. THE FOLLOWING RECOMMENDED GUIDELINES FOR STABILIZATION AND STRUCTURAL PRACTICES ARE BASED ON THE TRAFFIC CONTROL PLAN (TCP) OUTLINED IN THE CONSTRUCTION PLANS. WHERE FOLLOWING THE TRAFFIC CONTROL PLAN (TCP) OUTLINED IN THESE CONSTRUCTION PLANS, THE CONTRACTOR MAY CHOOSE TO ACCEPT THE FOLLOWING GUIDELINES OR MODIFY THEM IN SECTION 104 EROSION AND SEDIMENT CONTROL PLAN, SUBJECT TO APPROVAL FROM THE ENGINEER.

FOR ALL PHASES OF CONSTRUCTION, INSTALL PERIMETER CONTROLS SUCH AS SILT FENCE AND INLET PROTECTION SYSTEM BEFORE DISTURBING SOIL UPLAND OF THE CONTROLS.

PROTECT EXISTING INLET USING TEMPORARY EROSION AND SEDIMENT CONTROL DEVICES AT LOCATIONS INDICATED IN THE SUMMARY OF QUANTITIES PLANS.

2.A.1 STABILIZATION PRACTICES:

IN THE SECTION 104 EROSION & SEDIMENT CONTROL PLANS, THE CONTRACTOR SHALL DESCRIBE THE STABILIZATION PRACTICES PROPOSED TO CONTROL EROSION. THE CONTRACTOR SHALL INITIATE ALL STABILIZATION MEASURES AS SOON AS PRACTICAL, BUT IN NO CASE MORE THAN 14 DAYS, IN PORTIONS OF THE SITE WHERE CONSTRUCTION ACTIVITIES HAVE TEMPORARILY OR PERMANENTLY CEASED THE STABILIZATION PRACTICES PROPOSED BY THE CONTRACTOR SHALL INCLUDE AT LEAST THE FOLLOWING:

TEMPORARY:

* FILTER FABRICS IN ACCORDANCE WITH SPECIFICATION SECTION 104.

PERMANENT:

* ASPHALT OR CONCRETE SURFACE.

* SOD IN ACCORDANCE WITH SPECIFICATION SECTION 570.

2.A.2 STRUCTURAL PRACTICES:

IN THE SECTION 104 EROSION & SEDIMENT CONTROL PLAN, THE CONTRACTOR SHALL DESCRIBE THE PROPOSED STRUCTURAL PRACTICES TO CONTROL OR TRAP SEDIMENT AND OTHERWISE PREVENT THE DISCHARGE OF POLLUTANTS FROM EXPOSED AREAS OF THE SITE. ALL SEDIMENT CONTROLS SHALL BE IN PLACE BEFORE ANY SOIL DISTURBING ACTIVITY UPSTREAM OF THE CONTROL. THE STRUCTURAL PRACTICES PROPOSED BY THE CONTRACTOR SHALL INCLUDE AT LEAST THE FOLLOWING.

TEMPORARY:

* INLET PROTECTION SYSTEM IN ACCORDANCE WITH DESIGN STANDARD 102 AND SPECIFICATION SECTION 104.
* SILT FENCE IN ACCORDANCE WITH DESIGN STANDARD 102 AND SPECIFICATION SECTION 104.
* FLOATING TURBIDITY BARRIER SHALL BE PLACED ON A 20' RADIUS CENTERED ON THE OUTFALLS ALONG THE INTERCOSTAL WATERWAY MENTIONED IN THIS STORM WATER POLLUTION PREVENTION PLAN.

PERMANENT:

* SOD.

2.B. STORM WATER MANAGEMENT:

THE RUNOFF IS COLLECTED BY AND EXISTING STORM SEWER SYSTEM. FRENCH DRAIN WILL PROVIDE WATER QUALITY TREATMENT.
DESIGN STANDARDS.

2.C. OTHER CONTROLS:

2.C.1 WASTE DISPOSAL:

IN THE SECTION 104 EROSION & SEDIMENT CONTROL PLAN, THE CONTRACTOR SHALL DESCRIBE THE PROPOSED METHODS TO PREVENT THE DISCHARGE OF SOLID MATERIAL, INCLUDING BUILDING MATERIALS, TO WATERS OF THE UNITED STATES. AT A MINIMUM, THE PROPOSED METHODS SHALL:

* PROVIDE LITTER CONTROL AND COLLECTION WITHIN THE PROJECT DURING CONSTRUCTION ACTIVITIES.

* DISPOSE OF ALL FERTILIZER OR OTHER CHEMICAL CONTAINERS ACCORDING TO EPA'S STANDARD PRACTICES AS DETAILED BY THE MANUFACTURER.

* DISPOSE OF ALL SOLID MATERIALS INCLUDING BUILDING AND CONSTRUCTION MATERIAL OFF THE PROJECT SITE BUT NOT IN SURFACE WATERS, OR WETLANDS.

NOTICE: THE OFFICIAL RECORD OF THIS SHEET IS THE ELECTRONIC FILE SIGNED AND SEALED UNDER RULE 61G15-23.003, F.A.C.

REVISIONS			
DATE	DESCRIPTION	DATE	DESCRIPTION

A&P Consulting Transportation Engineers Corp.
10305 N.W. 41 Street, suite 115
Miami, FL 33178
(305) 592-7283 / fax: (305) 593-1594
CA No. : EB-0007797
Lazaro Ferrero, P.E. No. 58025

STATE OF FLORIDA
DEPARTMENT OF TRANSPORTATION

ROAD NO.	COUNTY	FINANCIAL PROJECT ID
A1A	BROWARD	428727-1-52-01

STORM WATER POLLUTION PREVENTION PLAN

SHEET NO. 26

2.C.2 OFF SITE VEHICLE TRACKING:

IN THE SECTION 104 EROSION & SEDIMENT CONTROL PLAN, THE CONTRACTOR SHALL DESCRIBE THE PROPOSED METHODS FOR MINIMIZING OFF SITE VEHICLE TRACKING OF SEDIMENT AND GENERATING DUST. AT A MINIMUM, THE PROPOSED METHODS SHALL INCLUDE:

* COVERING LOADED HAUL TRUCKS WITH TARPAULIN.

* REMOVING EXCESS DIRT FROM ROADS DAILY.

* STABILIZING CONSTRUCTION ENTRANCES ACCORDING TO DESIGN STANDARD 106.

* USING ROADWAY SWEEPERS DURING DUST GENERATING ACTIVITIES SUCH AS EXCAVATION AND MILLING OPERATIONS. BROOM MACHINES ARE NOT PERMITTED.

2.C.3 STATE AND LOCAL REGULATIONS FOR WASTE DISPOSAL, SANITARY SEWER, OR SEPTIC TANK REGULATIONS:

IN THE SECTION 104 EROSION & SEDIMENT CONTROL PLAN, THE CONTRACTOR SHALL DESCRIBE THE PROPOSED PROCEDURES TO COMPLY WITH APPLICABLE STATE AND LOCAL REGULATIONS FOR WASTE DISPOSAL, AND SANITARY SEWER OR SEPTIC SYSTEMS.

2.C.4 FERTILIZERS AND PESTICIDES:

IN THE SECTION 104 EROSION & SEDIMENT CONTROL PLAN, THE CONTRACTOR SHALL DESCRIBE THE PROCEDURES FOR APPLYING FERTILIZERS AND PESTICIDES. THE PROPOSED PROCEDURES SHALL COMPLY WITH APPLICABLE SUBSECTIONS OF EITHER SECTION 570 OF THE FDOT STANDARD SPECIFICATIONS.

2.C.5 HAZARDOUS MATERIALS AND SUBSTANCES:

IN THE SECTION 104 EROSION & SEDIMENT CONTROL PLAN, THE CONTRACTOR SHALL PROVIDE A LIST OF HAZARDOUS MATERIALS AND SUBSTANCES THAT ARE LIKELY TO BE USED ON THE JOB AND PROVIDE A PLAN ADDRESSING THE GENERATION, APPLICATION, MIGRATION, STORAGE, AND DISPOSAL OF THESE SUBSTANCES.

2.D. STATE AND LOCAL PERMITS TO BE APPLIED FOR:

* FDEP NPDES GENERAL PERMIT FOR DISCHARGE FROM CONSTRUCTION ACTIVITIES
* SFWMD NO NOTICE GENERAL ENVIRONMENTAL RESOURCE PERMIT

3.0 MAINTENANCE:

IN THE SECTION 104 EROSION & SEDIMENT CONTROL PLAN, THE CONTRACTOR SHALL PROVIDE A PLAN FOR MAINTAINING ALL EROSION AND SEDIMENT CONTROLS THROUGHOUT CONSTRUCTION. THE MAINTENANCE PLAN SHALL AT A MINIMUM, COMPLY WITH THE FOLLOWING.

* INLET PROTECTION: THE CONTRACTOR SHALL INSPECT THE PROTECTED INLETS EVERY TWO WEEKS AND REPLACE THE FILTER FABRIC AND INLET PROTECTION SYSTEM IF NECESSARY.

4.0 INSPECTIONS:

ALL EROSION CONTROL FEATURES ARE TO BE INSPECTED AT LEAST ONCE EVERY SEVEN CALENDAR DAYS AND WITHIN 24 HOURS OF THE END OF A STORM OF 0.5" OR GREATER. WHERE SITES HAVE PERMANENTLY STABILIZED, AN INSPECTION SHALL BE CONDUCTED AT LEAST ONCE EVERY 30 DAYS. IN ADDITION, A DAILY REVIEW OF THE LOCATION OF EROSION CONTROL DEVICES SHALL BE MADE IN AREAS WHERE CONSTRUCTION ACTIVITIES HAVE CHANGED THE NATURAL CONTOUR AND DRAINAGE RUNOFF, IN ORDER TO ENSURE THAT SILT FENCES AND OTHER EROSION CONTROL DEVICES ARE PROPERLY LOCATED FOR EFFICACY. A FORM ACCEPTABLE TO THE FDOT WILL BE USED TO REPORT ALL INSPECTION FINDINGS AND CORRECTIVE ACTIONS TAKEN AS A RESULT OF THE INSPECTION. EACH INSPECTION REPORT SHALL BE SIGNED AND SUBMITTED WEEKLY TO THE PROJECT ENGINEER. IF A REPAIR IS NECESSARY, IT WILL BE INITIATED WITH 24 HOURS OF BEING NOTED IN CONTRACTOR'S INSPECTION REPORT.

* POINTS OF DISCHARGE TO WATERS OF THE UNITED STATES.

* POINTS OF DISCHARGE TO MUNICIPAL SEPARATE STORM SEWER SYSTEMS.

* DISTURBED AREAS OF THE SITE THAT HAVE NOT BEEN FINALLY STABILIZED.

* AREAS USED FOR STORAGE OF MATERIALS THAT ARE EXPOSED TO PRECIPITATION.

* STRUCTURAL CONTROLS.

* STORM WATER MANAGEMENT SYSTEMS.

* LOCATIONS WHERE VEHICLES ENTER OR EXIT THE SITE.

5.0 NON STORM WATER DISCHARGES:

IN THE SECTION 104 EROSION & SEDIMENT CONTROL PLAN, THE CONTRACTOR SHALL IDENTIFY ALL ANTICIPATED NON-STORM WATER DISCHARGES (EXCEPT FLOWS FROM FIRE FIGHTING ACTIVITIES). THE CONTRACTOR SHALL DESCRIBE THE PROPOSED MEASURES TO PREVENT POLLUTION OF THESE NON-STORM WATER DISCHARGES. IF THE CONTRACTOR ENCOUNTERS CONTAMINATED SOIL OR GROUNDWATER, CONTACT DISTRICT CONTAMINATION IMPACT COORDINATOR (DCIC) AT PHONE NUMBER (954) 777-4286.

6.0 CONTRACTOR SUBMITTAL:

IT IS THE RESPONSIBILITY OF THE CONTRACTOR TO DEVELOP AN EROSION CONTROL PLAN THAT PROVIDES A DETAILED DESCRIPTION OF ALL EROSION AND SEDIMENT CONTROLS, BMPS, AND MEASURES THAT WILL BE IMPLEMENTED AT THE CONSTRUCTION SITE FOR EACH ACTIVITY IDENTIFIED IN SECTION 1.B SEQUENCE OF SOIL DISTURBING ACTIVITIES. CONTRACTOR IS RESPONSIBLE FOR PROVIDING TIMEFRAMES IN WHICH THE CONTROLS WILL BE IMPLEMENTED, MAINTAINED AND REMOVED. THIS INFORMATION SHALL BE KEPT AT THE PROJECT FIELD OFFICE IN ORDER FOR THE PROJECT TO BE CONSIDERED IN COMPLIANCE WITH THE FDEP GENERIC PERMIT FOR STORM WATER DISCHARGE FROM LARGE AND SMALL CONSTRUCTION SITES.

THE CONTRACTOR IS RESPONSIBLE FOR ENSURING THE FOLLOWING ITEMS ARE ON SITE:

1. COPY OF THE SWPPP WITH THE ORIGINAL CERTIFICATION SIGNATURES.
2. COPY OF THE CONTRACTOR'S EROSION CONTROL PLAN.
3. HAZARDOUS SPILL CONTROL PLAN WITH GUIDELINES ON CONTACTING THE 24-HOUR EMERGENCY RESPONSE PROGRAM FOR HAZARDOUS MATERIAL SPILLS. THIS SHALL INCLUDE COPIES OF DISCHARGE NOTIFICATIONS THAT HAVE OCCURRED WITHIN THE PROJECT LIMITS.
4. COMPLETED INSPECTION FORMS.

NOTICE: THE OFFICIAL RECORD OF THIS SHEET IS THE ELECTRONIC FILE SIGNED AND SEALED UNDER RULE 61G15-23.003, F.A.C.

GENERAL NOTES:

1. TRAFFIC CONTROLS SHALL BE IN ACCORDANCE WITH THE PROJECT PLANS, THE CURRENT EDITION OF THE FLORIDA DOT DESIGN STANDARDS (600 SERIES), THE STANDARD SPECIFICATION FOR ROAD AND BRIDGE CONSTRUCTION, AND THE MANUAL ON UNIFORM TRAFFIC CONTROL DEVICES (2009 EDITION) AS MINIMUM CRITERIA.

2. THE CONTRACTOR SHALL IMMEDIATELY REPAIR ALL POTHOLES THAT DEVELOP WITHIN THE PROJECT LIMITS AND WILL MAINTAIN A SUPPLY OF COLD MIX ON THE PROJECT SITE TO EXPEDITE THOSE REPAIRS. COST OF REPAIR TO BE INCLUDED IN PAY ITEM 102-1, MAINTENANCE OF TRAFFIC.

3. NOTIFICATION OF LANE CLOSURES OR TEMPORARY DETOURS SHALL BE ACCOMPLISHED 14 WORKING DAYS PRIOR TO CLOSURE, DETOUR OR MOT PHASE CHANGE BY SUBMITTING THE REQUIRED LANE CLOSURE FORM, SKETCHES, CALCULATIONS, AND OTHER DATA THROUGH THE ENGINEER TO THE DISTRICT TRAFFIC OPERATIONS OFFICE.

4. AT THE DISCRETION OF THE ENGINEER, IF A LANE CLOSURE CAUSES EXTENDED CONGESTION OR DELAY, THE CONTRACTOR SHALL BE DIRECTED TO REOPEN THE CLOSED LANE(S) UNTIL SUCH TIME THAT THE TRAFFIC FLOW HAS RETURNED TO AN ACCEPTABLE LEVEL.

5. THE TRAFFIC AND TRAVEL WAYS SHALL NOT BE ALTERED BY THE CONTRACTOR TO CREATE A WORK ZONE UNTIL ALL LABOR AND MATERIAL ARE AVAILABLE FOR THE CONSTRUCTION IN THAT AREA.

6. ARROWS ON THE TCP DENOTE THE DIRECTION OF TRAFFIC ONLY AND DO NOT REFLECT PAVEMENT MARKINGS UNLESS SPECIFICALLY NOTED.

7. NO LANE CLOSURE ON S.R. A1A / SOUTH OCEAN DRIVE AND HALLANDALE BEACH BLVD INTERSECTION SHALL BE ALLOWED DURING THE FOLLOWING HOURS:
   - FROM 8:30 AM TO 7:30 PM FOR PHASES I.
   - FROM 7:30 AM TO 11:00 PM FOR PHASE II, III, AND IV.
   - LANE CLOSURES FOR CONCRETE POURS WILL ONLY BE ALLOWED FROM 6:30 AM TO 8:30 AM DURING PHASE I.

SIGNALS:

8. CONTRACTOR SHALL NOTIFY BROWARD COUNTY TRAFFIC ENGINEERING (954-847-2745) 48 HOURS PRIOR TO ANY MODIFICATION OF AN EXISTING TRAFFIC SIGNAL SYSTEM. THE CONTRACTOR SHALL HAVE FULL RESPONSIBILITY FOR THE MAINTENANCE OF THE EXISTING SIGNALS WITHIN THE PROJECT LIMITS. SHOULD VEHICLE DETECTION OF ANY TYPE BECOME DAMAGED DURING CONSTRUCTION, THE CONTRACTOR SHALL: (1) IMMEDIATELY IMPLEMENT REPAIRS TO BRING DETECTOR(S) INTO WORKING CONDITION OR, (2) COORDINATE WITH BROWARD COUNTY TRAFFIC ENGINEERING TO IMPLEMENT TEMPORARY SIGNAL TIMING TO ACCOMMODATE TURNING MOVEMENTS UNTIL REPAIRS ARE COMPLETED. COST OF MAINTAINING THE EXISTING TRAFFIC SIGNAL AND TRAFFIC DETECTION SHALL BE INCLUDED IN PAY ITEM 102-104 TEMPORARY SIGNAL AND MAINTENANCE AND PAY ITEM 102-107-1 TEMPORARY DETECTION AND MAINTENANCE.

9. EXISTING INTERCONNECT COMMUNICATION TO EXISTING SIGNALIZATION SHALL BE MAINTAINED BY PROVIDING TEMPORARY INTERCONNECT OR PHONE LINES AND CONNECTIONS.

10. EXISTING INTERCONNECT CONDUIT AND CABLE DAMAGED AS A RESULT OF CONSTRUCTION SHALL BE REPLACED.

11. IN ALL CASES, DAMAGED COMMUNICATIONS CABLE SHALL BE REPLACED AS AN ENTIRE RUN FROM APPROVED JUNCTION POINT TO JUNCTION POINT AND SHALL BE TERMINATED IN PULL/JUNCTION BOXES. THE CONTRACTOR SHALL OBTAIN SYSTEMS COMMUNICATIONS INFORMATION FROM BCTED (954-847-2745)

12. COST OF MAINTAINING COMMUNICATIONS, INCLUDING TEMPORARY LINES, CABLE, CONDUIT, AND REPLACING DAMAGED CABLE AND CONDUIT SHALL BE INCLUDED IN 102-1 MAINTENANCE OF TRAFFIC.

MARKINGS:

13. ALL TEMPORARY STRIPES AND MARKINGS SHALL BE PAINT ONLY, UNLESS OTHERWISE SPECIFIED ON THE PLANS OR APPROVED BY THE ENGINEER.

INTERSECTIONS:

14. CONTRACTOR SHALL BE RESPONSIBLE TO REPLACE CONCRETE CURB OR SIDEWALK WITHIN 48 HOURS OF THE TIME FROM REMOVAL OF EXISTING CONCRETE CURB OR SIDEWALK.

15. CONTRACTOR SHALL NOT WORK ON MORE THAN ONE CORNER OF AN INTERSECTION AT A TIME.

16. TWO CONSTRUCTION INFORMATION SIGNS ARE REQUIRED FOR THIS PROJECT. SEE INDEX 600, SHEET No. 7 OF 13 FOR SIGN DETAILS. COST OF FURNISHING, INSTALLING, AND REMOVING THE SIGNS IS INCLUDED IN ITEM 102-1, MAINTENANCE OF TRAFFIC.

17. ALL LANES OF S.R. A1A / SOUTH OCEAN DRIVE MUST BE OPEN TO TRAFFIC DURING AN EVACUATION NOTICE OF HURRICANE OR OTHER CATASTROPHIC EVENT AND SHALL REMAIN OPEN FOR THE DURATION OF THE EVENT OR AS DIRECTED BY THE PROJECT ENGINEER.

PEDESTRIANS, BICYCLES, AND WHEELCHAIRS:

18 CONSTRUCTION ACTIVITIES THAT INVOLVE SIDEWALKS ON BOTH SIDES OF THE STREET ARE NOT ALLOWED UNLESS APPROVED BY THE ENGINEER.

LIGHTING:

19. THE CONTRACTOR SHALL MAINTAIN THE EXISTING LIGHTING SYSTEM UNTIL THE PROPOSED LIGHTING SYSTEM IS IN SERVICE. THIS WILL INCLUDE BUT NOT BE LIMITED TO ROUTINE MAINTENANCE OF AND REPLACEMENTS RESULTING FROM ANY DAMAGE BY THE CONTRACTOR OR HIS SUBCONTRACTORS TO LUMINARIES, FUSES, BALLAST, POLES, BASES, OR ANY INCIDENTAL PARTS. COST TO BE INCLUDED IN PAY ITEM 102-1, MAINTENANCE OF TRAFFIC.

20. THE CONTRACTOR SHALL INSTALL THE PROPOSED LIGHTING SYSTEM, INCLUDING CONDUIT, PULL BOXES, AND SERVICE CONNECTIONS AND HAVE THE SYSTEM IN OPERATION BEFORE TAKING THE EXISTING SYSTEM OUT OF SERVICE. COST TO MAINTAIN THE PROPOSED LIGHTING SYSTEM IN SERVICE PRIOR TO FINAL ACCEPTANCE SHALL BE INCLUDED IN PAY ITEM 102-1, MAINTENANCE OF TRAFFIC.

ADVANCE CONSTRUCTION NOTICE:

21. THE CONTRACTOR SHALL FURNISH AND MAINTAIN PORTABLE CHANGEABLE MESSAGE SIGN AT LOCATIONS INDICATED BY THE ENGINEER. MESSAGE FOR THE PCMS SHALL BE AS DIRECTED BY THE ENGINEER. THE PCMS SHALL BE IN PLACE TWO WEEKS BEFORE THE START OF ANY WORK ITEMS AFFECTING THE EXISTING VEHICULAR AND PEDESTRIAN TRAFFIC. ALSO, A PCMS SHALL BE PLACED AT THE RAMP OF HALLANDALE BEACH BLVD GOING WESTBOUND DURING MILLING AND RESURFACING OPERATIONS OF THE RAMP. PCMS INSTALLATION, OPERATION, AND REMOVAL SHALL BE PAID UNDER PAY ITEM 102-99, PORTABLE CHANGEABLE MESSAGE SIGN, TEMPORARY.

PORTABLE CHANGEABLE MESSAGE SIGN (PCMS)

TWO WEEKS PRIOR TO CONSTRUCTION AT BEGINNING AND END OF PROJECT:

DISPLAY 1	DISPLAY 2
ROAD WORK BEGINS	ENTER DATE

DURING MILLING AND RESURFACING OPERATIONS OF THE RAMP TO HALLANDALE BEACH BOULEVARD WESTBOUND PRIOR TO THE RAMP'S ENTRANCE:

DISPLAY 1	DISPLAY 2
RAMP CLOSED	USE NEXT SIGNAL

NOTICE: THE OFFICIAL RECORD OF THIS SHEET IS THE ELECTRONIC FILE SIGNED AND SEALED UNDER RULE 61G15-23.003, F.A.C.

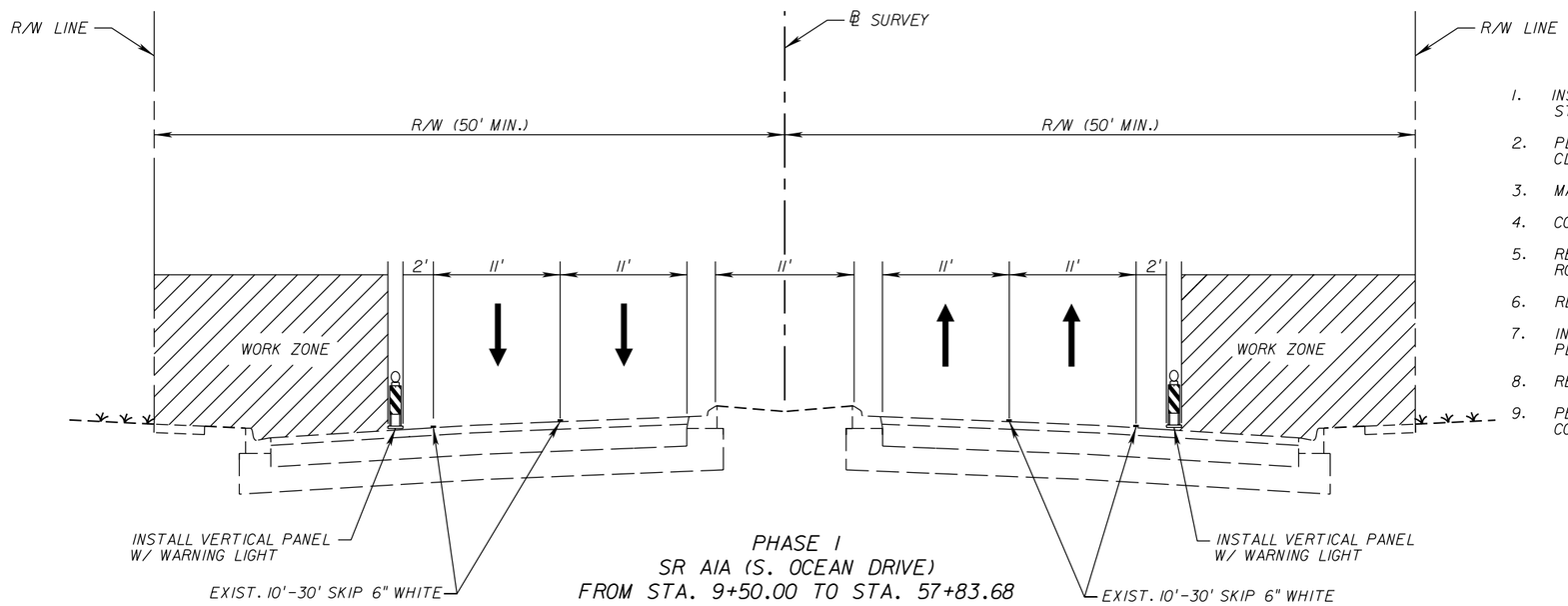

PHASE I
SR AIA (S. OCEAN DRIVE)
FROM STA. 9+50.00 TO STA. 57+83.68

PHASE I

1. INSTALL AND MAINTAIN TEMPORARY EROSION AND SEDIMENT CONTROL DEVICE AS PER STORM WATER POLLUTION PREVENTION PLAN.
2. PLACE TEMPORARY WORK SIGNS, BARRICADES, AND OTHER TRAFFIC CONTROL DEVICES TO CLOSE NORTHBOUND AND SOUTHBOUND OUTSIDE LANES AS PER INDEX 600, 613, AND 616.
3. MAINTAIN PEDESTRIAN TRAFFIC DURING SIDEWALK CONSTRUCTION AS PER INDEX 660.
4. CONSTRUCT CURB RAMPS AS SPECIFIED IN THE ROADWAY PLANS.
5. RECONSTRUCT CURB AND GUTTER, SOD AREAS AND SIDEWALK AS SPECIFIED IN THE ROADWAY PLANS.
6. REHABILITATE DRAINAGE PIPE AS INDICATED IN ROADWAY PLANS.
7. INSTALL TRAFFIC ASSEMBLIES AS SPECIFIED IN THE SIGNING AND PAVEMENT MARKING PLANS.
8. REPLACE PTMS SITES AS SPECIFIED IN THE PLANS.
9. PERFORM SIGNALIZATION AND LIGHTING IMPROVEMENTS AS SPECIFIED IN THE RELATED COMPONENT PLAN SET.

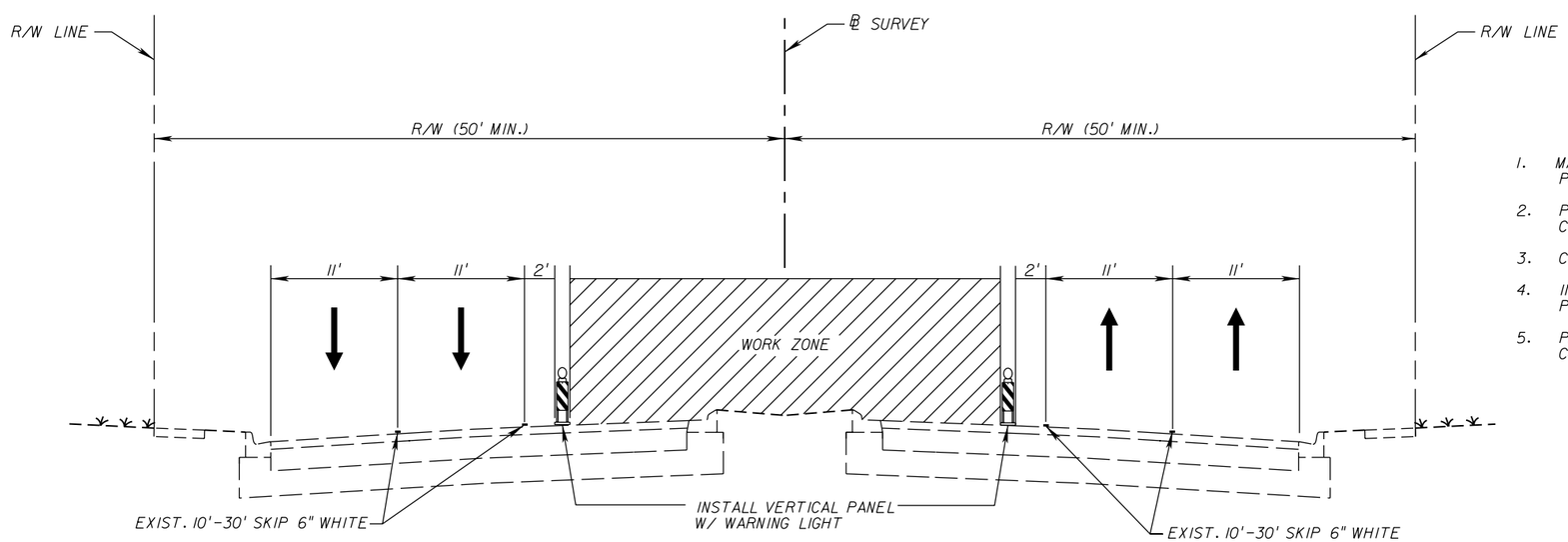

PHASE IA
SR AIA (S. OCEAN DRIVE)
FROM STA. 10+00.00 TO STA. 57+83.68

PHASE IA

1. MAINTAIN TEMPORARY EROSION AND SEDIMENT CONTROL DEVICE AS PER STORM WATER POLLUTION PREVENTION PLAN.
2. PLACE TEMPORARY WORK SIGNS, BARRICADES, AND OTHER TRAFFIC CONTROL DEVICES TO CLOSE NORTHBOUND AND SOUTHBOUND INSIDE LANES AS PER INDEX 600, 613, AND 616.
3. CONSTRUCT MEDIAN CROSSWALKS AS SPECIFIED IN THE ROADWAY PLANS.
4. INSTALL TRAFFIC ASSEMBLIES AS SPECIFIED IN THE SIGNING AND PAVEMENT MARKING PLANS.
5. PERFORM SIGNALIZATION AND LIGHTING IMPROVEMENTS AS SPECIFIED IN THE RELATED COMPONENT PLAN SET.

NOTICE: THE OFFICIAL RECORD OF THIS SHEET IS THE ELECTRONIC FILE SIGNED AND SEALED UNDER RULE 61G15-23.003, F.A.C.

REVISIONS			
DATE	DESCRIPTION	DATE	DESCRIPTION

A&P Consulting Transportation Engineers Corp.
10305 N.W. 41 Street, suite 115
Miami, FL 33178
(305) 592-7283 / fax: (305) 593-1594
CA No. : EB-0007797
Eithel M. Sierra, P.E. No. 55401

STATE OF FLORIDA
DEPARTMENT OF TRANSPORTATION

ROAD NO.	COUNTY	FINANCIAL PROJECT ID
AIA	BROWARD	428727-1-52-01

TEMPORARY TRAFFIC CONTROL PLAN

SHEET NO. 29

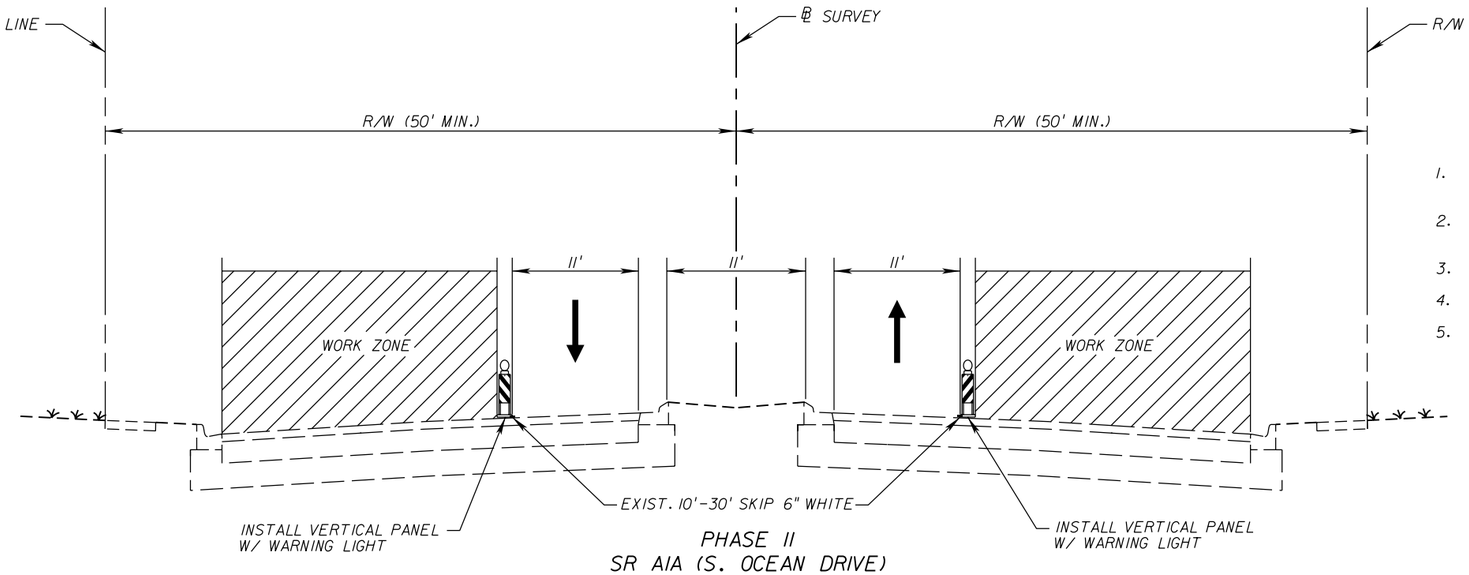

PHASE II
SR AIA (S. OCEAN DRIVE)
FROM STA. 9+80.00 TO STA. 57+83.68

PHASE II

1. MAINTAIN TEMPORARY EROSION AND SEDIMENT CONTROL DEVICE AS PER STORM WATER POLLUTION PREVENTION PLAN.
2. PLACE TEMPORARY WORK SIGNS, BARRICADES, AND OTHER TRAFFIC CONTROL DEVICES TO CLOSE NORTHBOUND AND SOUTHBOUND OUTSIDE LANES AS PER INDEX 600, 613, AND 616.
3. MILL AND RESURFACE UP TO THE STRUCTURAL COURSE.
4. PLACE TEMPORARY PAVEMENT MARKINGS.
5. ADJUST MANHOLE AND VALVE BOX COVERS AS SPECIFIED IN THE ROADWAY PLANS.

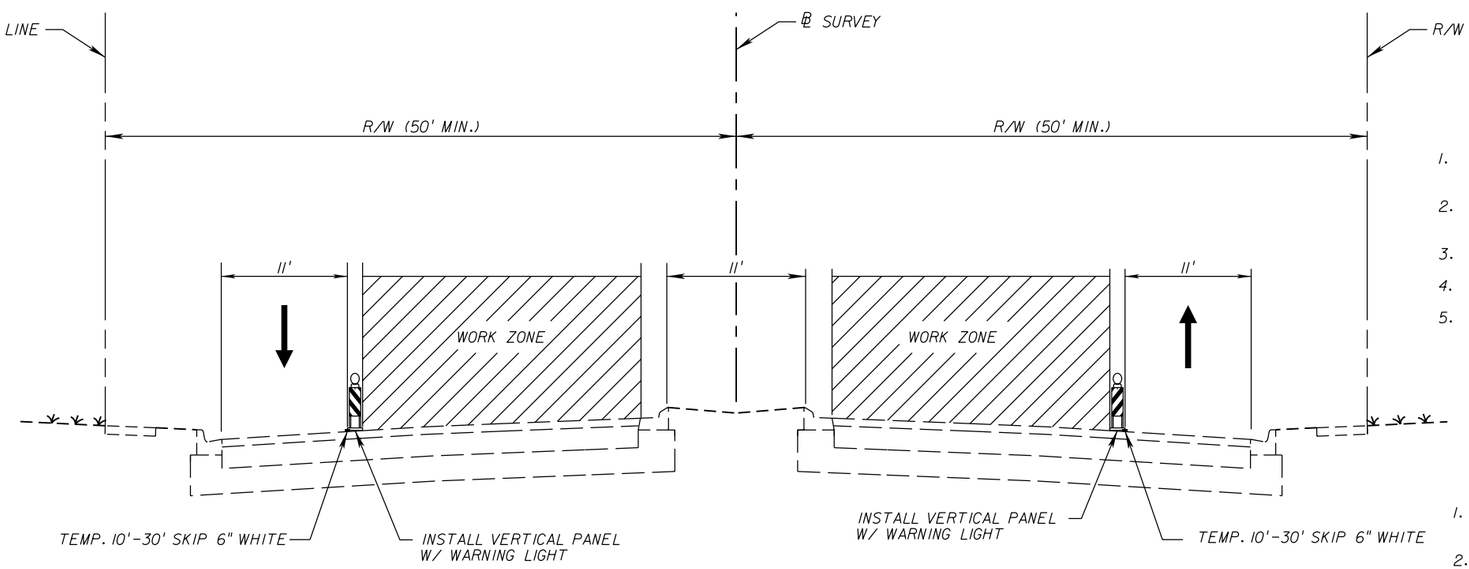

PHASE III
SR AIA (S. OCEAN DRIVE)
FROM STA. 9+80.00 TO STA. 57+83.68

PHASE III

1. MAINTAIN TEMPORARY EROSION AND SEDIMENT CONTROL DEVICE AS PER STORM WATER POLLUTION PREVENTION PLAN.
2. PLACE TEMPORARY WORK SIGNS, BARRICADES, AND OTHER TRAFFIC CONTROL DEVICES TO CLOSE NORTHBOUND AND SOUTHBOUND MIDDLE AND INSIDE LANES AS PER INDEX 600 AND 618.
3. MILL AND RESURFACE UP TO THE STRUCTURAL COURSE.
4. PLACE TEMPORARY PAVEMENT MARKINGS.
5. ADJUST MANHOLE AND VALVE BOX COVERS AS SPECIFIED IN THE ROADWAY PLANS.

PHASE IV

1. MAINTAIN TEMPORARY EROSION AND SEDIMENT CONTROL DEVICE AS PER STORM WATER POLLUTION PREVENTION PLAN.
2. PLACE TEMPORARY WORK SIGNS, BARRICADES, AND OTHER TRAFFIC CONTROL DEVICES AS PER INDEX 600, 613, 615, AND 618.
3. PLACE FRICTION COURSE AS SPECIFIED IN THE ROADWAY PLANS.
4. PLACE FINAL PAVEMENT MARKINGS AND RPM'S AS SPECIFIED IN THE SIGNING AND PAVEMENT MARKINGS PLANS.
5. PLACE FINAL TRAFFIC ASSEMBLIES (LOOPS, PIEZOS).

NOTICE: THE OFFICIAL RECORD OF THIS SHEET IS THE ELECTRONIC FILE SIGNED AND SEALED UNDER RULE 61G15-23.003, F.A.C.

REVISIONS			
DATE	DESCRIPTION	DATE	DESCRIPTION

A&P Consulting Transportation Engineers Corp.
10305 N.W. 41 Street, suite 115
Miami, FL 33178
(305) 592-7283 / fax: (305) 593-1594
CA No. : EB-0007797
Eithel M. Sierra, P.E. No. 55401

STATE OF FLORIDA
DEPARTMENT OF TRANSPORTATION

ROAD NO.	COUNTY	FINANCIAL PROJECT ID
AIA	BROWARD	428727-1-52-01

TEMPORARY TRAFFIC CONTROL PLAN

SHEET NO. 30

LEGEND:

1. EXISTING **WATER VALVES** (TO BE ADJUSTED BY CITY OF HALLANDALE BEACH)
2. EXISTING **CATV BOX** (TO BE ADJUSTED BY COMCAST)
2A. EXISTING **CATV BOX** (TO BE RELOCATED OUTSIDE OF CURB RAMP BY COMCAST)
3. EXISTING **TELE MH** (TO BE ADJUSTED BY AT&T)
4. EXISTING **SAN MH TOP** (TO BE ADJUSTED BY CITY OF HALLANDALE BEACH)
5. EXISTING **STORM MH TOP** (TO BE ADJUSTED BY CONTRACTOR)
8. EXISTING **ELECT. MH TOP** (TO BE ADJUSTED BY FPL)
9. EXISTING **FIRE HYDRANT** (TO BE RELOCATED BY CITY OF HALLANDALE BEACH)
10. EXISTING **STREET LIGHT BE** (TO BE PLACED OUT OF SERVICE BY CONTRACTOR)
11. EXISTING **GAS VALVE** (TO BE ADJUSTED BY TECO PEOPLE GAS)
12. EXISTING **WATER METER** (TO BE REPLACED BY CITY OF HALLANDALE BEACH)
13. EXISTING **BT LINE** (TO BE RELOCATED BY AT&T)
14. EXISTING **GAS LINE** (TO BE RELOCATED BY TECO PEOPLE GAS)
15. EXISTING **BTV LINE** (TO BE RELOCATED BY COMCAST)
16. EXISTING **WATER LINE** (TO BE RELOCATED BY CITY OF HALLANDALE BEACH)
17. EXISTING **FOC LINE** (TO BE RELOCATED BY AT&T)
18. EXISTING **SAN MH TOP** (TO BE ADJUSTED BY CITY OF HOLLYWOOD)
20. EXISTING **WATER VALVE** (TO BE ADJUSTED BY CITY OF HOLLYWOOD)
21. EXISTING **FIRE HYDRANT** (TO BE RELOCATED BY CITY OF HOLLYWOOD)
22. EXISTING **LUMINAIRE ATTACHED TO FPL POLE** (TO BE REMOVED BY FPL DISTRIBUTION)
23. EXISTING **IRRIGATION SYSTEM** (TO BE RELOCATED BY THE CITY OF HALLANDALE BEACH)
25. EXISTING **ELECT. PULL BOX** (TO BE ADJUSTED BY FPL)
26. EXISTING **WATER LINE** (TO BE RELOCATED BY NORTH-MIAMI BEACH)
27. PROPOSED **FIRE HYDRANT** (TO BE INSTALLED BY CITY OF HALLANDALE BEACH UNDER A SEPARATE PERMIT PRIOR TO CONSTRUCTION)

UTILITY ADJUSTMENTS LEGEND

REVISIONS			
DATE	DESCRIPTION	DATE	DESCRIPTION

A&P Consulting Transportation Engineers Corp.
10305 N.W. 41 Street, suite 115
Miami, FL 33178
(305) 592-7283 / fax: (305) 593-1594
CA No. : EB-0007797
Eithel M. Sierra, P.E. No. 55401

STATE OF FLORIDA
DEPARTMENT OF TRANSPORTATION

ROAD NO.	COUNTY	FINANCIAL PROJECT ID
A1A	BROWARD	428727-1-52-01

UTILITY ADJUSTMENTS

SHEET NO. 31

NOTICE: THE OFFICIAL RECORD OF THIS SHEET IS THE ELECTRONIC FILE SIGNED AND SEALED UNDER RULE 61G15-23.003, F.A.C.

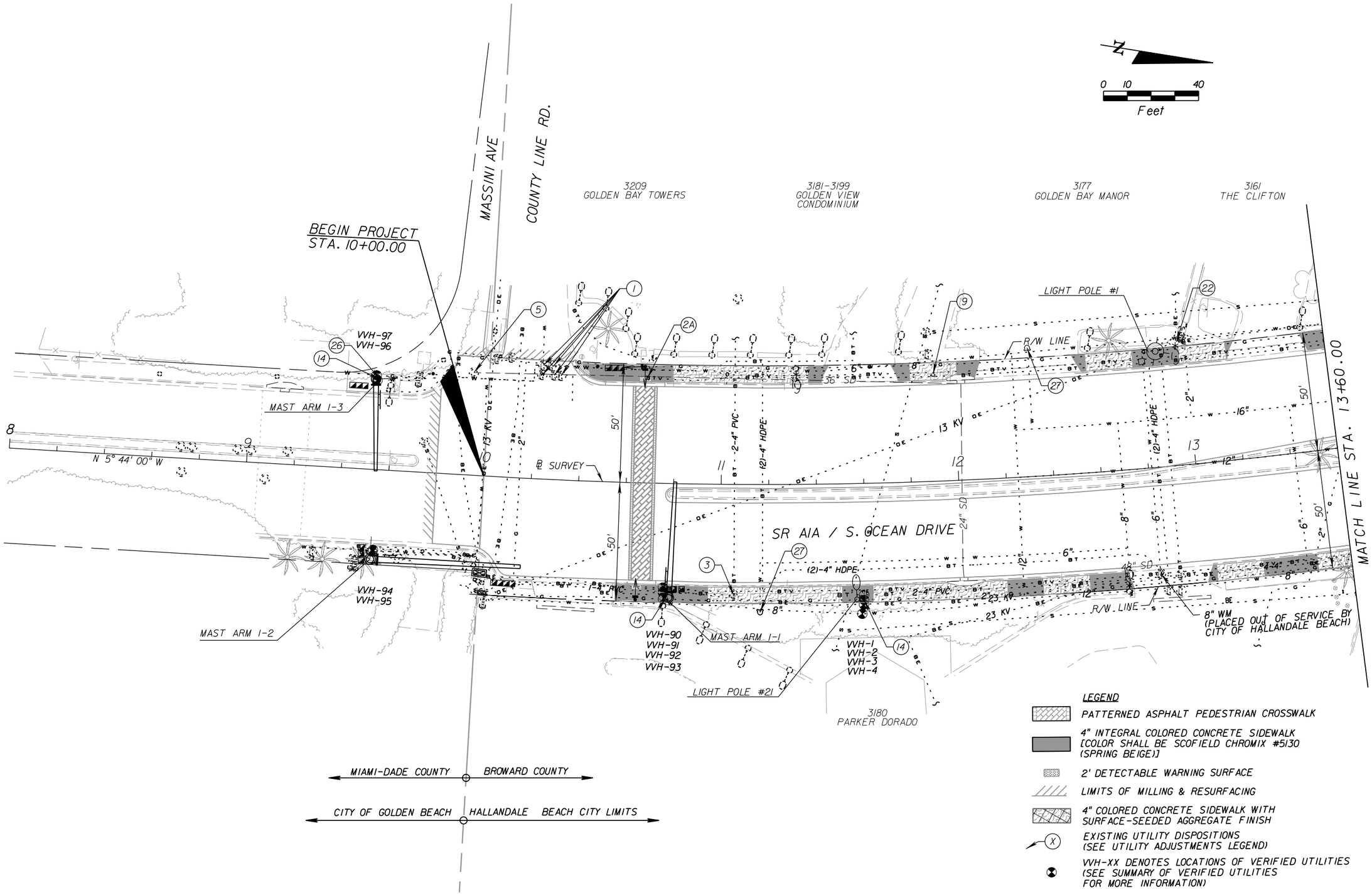

NOTICE: THE OFFICIAL RECORD OF THIS SHEET IS THE ELECTRONIC FILE SIGNED AND SEALED UNDER RULE 61G15-23.003, F.A.C.

REVISIONS			
DATE	DESCRIPTION	DATE	DESCRIPTION

A&P Consulting Transportation Engineers Corp.
10305 N.W. 41 Street, suite 115
Miami, FL 33178
(305) 592-7283 / fax: (305) 593-1594
CA No. : EB-0007797
Eithel M. Sierra, P.E. No. 55401

STATE OF FLORIDA
DEPARTMENT OF TRANSPORTATION

ROAD NO.	COUNTY	FINANCIAL PROJECT ID
AIA	BROWARD	428727-1-52-01

UTILITY ADJUSTMENTS

SHEET NO. 32

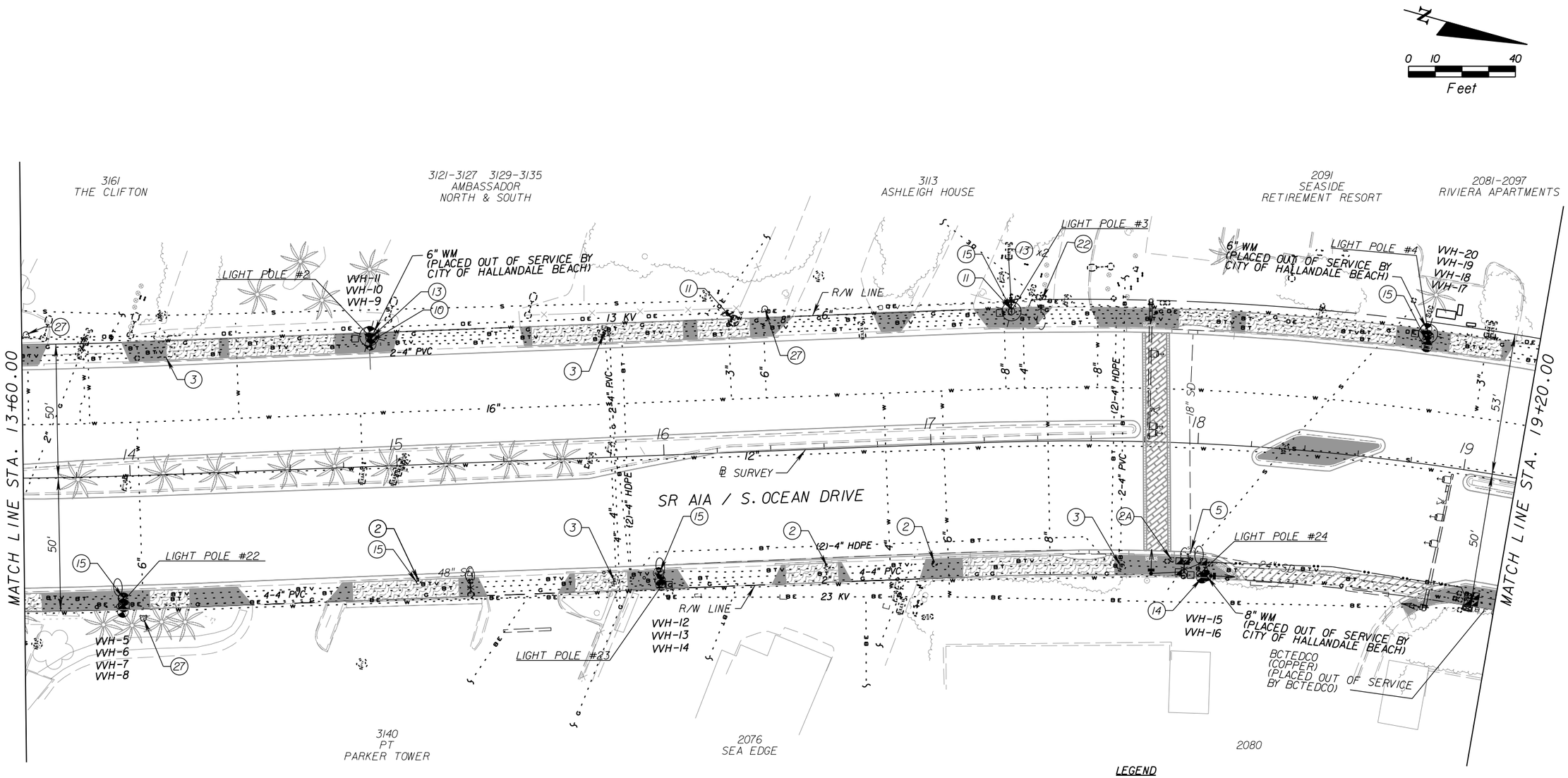

LEGEND

- PATTERNED ASPHALT PEDESTRIAN CROSSWALK
- 4" INTEGRAL COLORED CONCRETE SIDEWALK [COLOR SHALL BE SCOFIELD CHROMIX #5130 (SPRING BEIGE)]
- 2' DETECTABLE WARNING SURFACE
- LIMITS OF MILLING & RESURFACING
- 4" COLORED CONCRETE SIDEWALK WITH SURFACE-SEEDED AGGREGATE FINISH
- (X) EXISTING UTILITY DISPOSITIONS (SEE UTILITY ADJUSTMENTS LEGEND)
- VVH-XX DENOTES LOCATIONS OF VERIFIED UTILITIES (SEE SUMMARY OF VERIFIED UTILITIES FOR MORE INFORMATION)

REVISIONS			
DATE	DESCRIPTION	DATE	DESCRIPTION

A&P Consulting Transportation Engineers Corp.
10305 N.W. 41 Street, suite 115
Miami, FL 33178
(305) 592-7283 / fax: (305) 593-1594
CA No. : EB-0007797
Eithel M. Sierra, P.E. No. 55401

STATE OF FLORIDA
DEPARTMENT OF TRANSPORTATION

ROAD NO.	COUNTY	FINANCIAL PROJECT ID
AIA	BROWARD	428727-1-52-01

UTILITY ADJUSTMENTS

SHEET NO. 33

NOTICE: THE OFFICIAL RECORD OF THIS SHEET IS THE ELECTRONIC FILE SIGNED AND SEALED UNDER RULE 61G15-23.003, F.A.C.

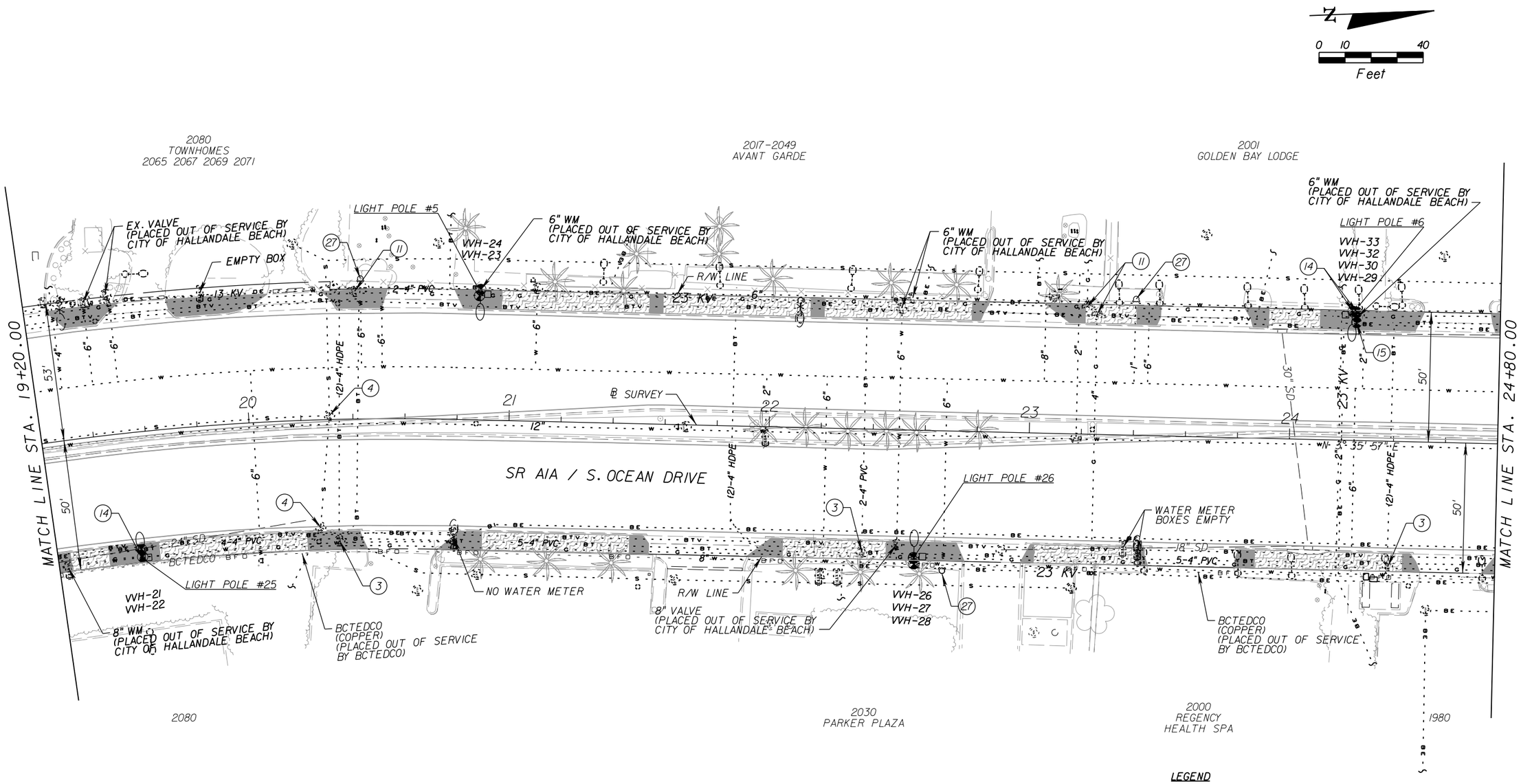

LEGEND

4" INTEGRAL COLORED CONCRETE SIDEWALK [COLOR SHALL BE SCOFIELD CHROMIX #5130 (SPRING BEIGE)]

4" COLORED CONCRETE SIDEWALK WITH SURFACE-SEEDED AGGREGATE FINISH

(X) EXISTING UTILITY DISPOSITIONS (SEE UTILITY ADJUSTMENTS LEGEND)

VVH-XX DENOTES LOCATIONS OF VERIFIED UTILITIES (SEE SUMMARY OF VERIFIED UTILITIES FOR MORE INFORMATION)

NOTICE: THE OFFICIAL RECORD OF THIS SHEET IS THE ELECTRONIC FILE SIGNED AND SEALED UNDER RULE 61G15-23.003, F.A.C.

REVISIONS			
DATE	DESCRIPTION	DATE	DESCRIPTION

A&P Consulting Transportation Engineers Corp.
10305 N.W. 41 Street, suite 115
Miami, FL 33178
(305) 592-7283 / fax: (305) 593-1594
CA No. : EB-0007797
Eithel M. Sierra, P.E. No. 55401

STATE OF FLORIDA
DEPARTMENT OF TRANSPORTATION

ROAD NO.	COUNTY	FINANCIAL PROJECT ID
AIA	BROWARD	428727-1-52-01

UTILITY ADJUSTMENTS

SHEET NO. 34

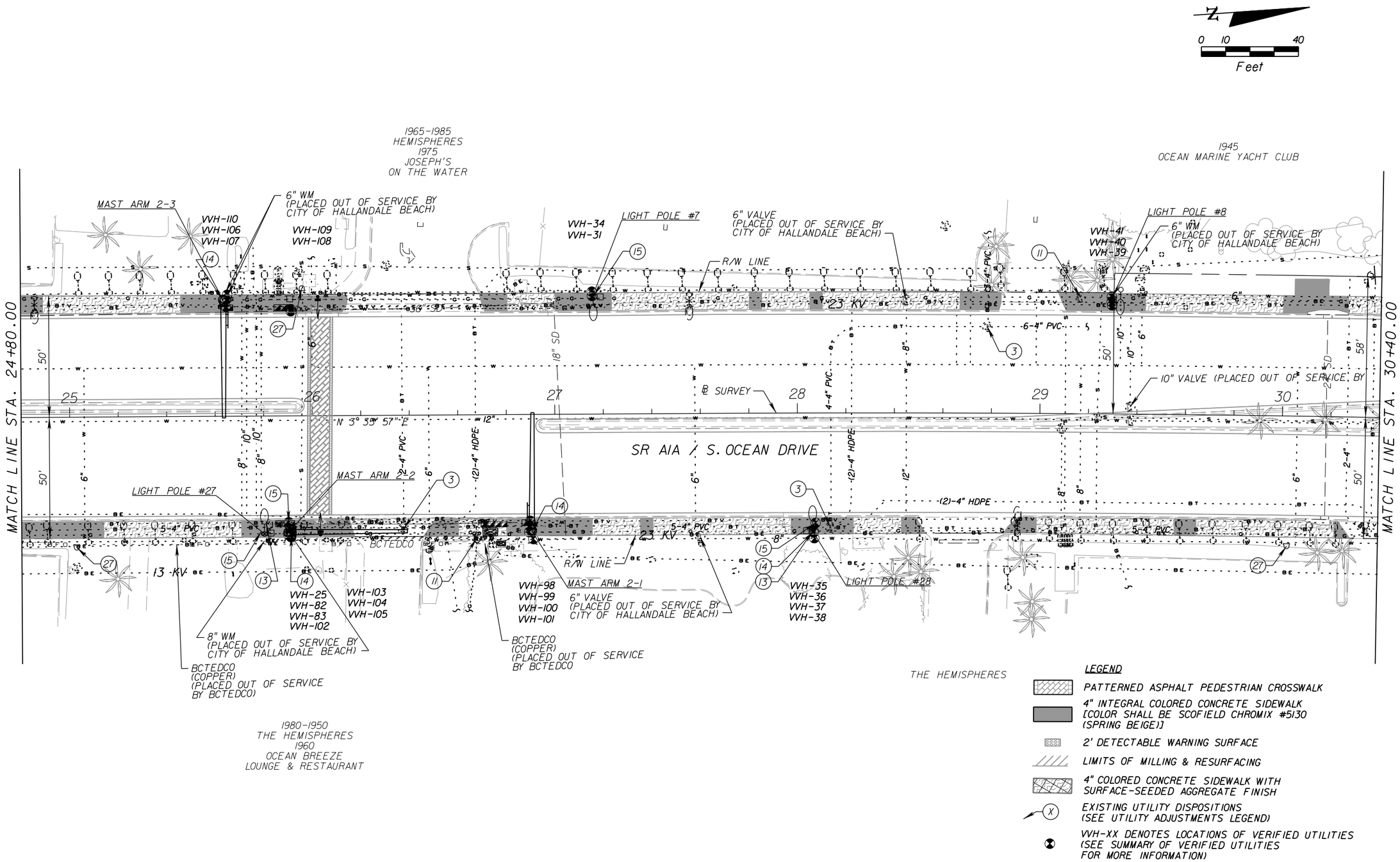

NOTICE: THE OFFICIAL RECORD OF THIS SHEET IS THE ELECTRONIC FILE SIGNED AND SEALED UNDER RULE 61G15-23.003, F.A.C.

REVISIONS			
DATE	DESCRIPTION	DATE	DESCRIPTION

A&P Consulting Transportation Engineers Corp.
10305 N.W. 41 Street, suite 115
Miami, FL 33178
(305) 592-7283 / fax: (305) 593-1594
CA No. : EB-0007797
Eithel M. Sierra, P.E. No. 55401

STATE OF FLORIDA
DEPARTMENT OF TRANSPORTATION

ROAD NO.	COUNTY	FINANCIAL PROJECT ID
AIA	BROWARD	428727-1-52-01

UTILITY ADJUSTMENTS

SHEET NO. 35

emsierra 12/5/2013 11:14:50 AM H:\e\Projects\428727\5201\roadway\utadrd04.dgn

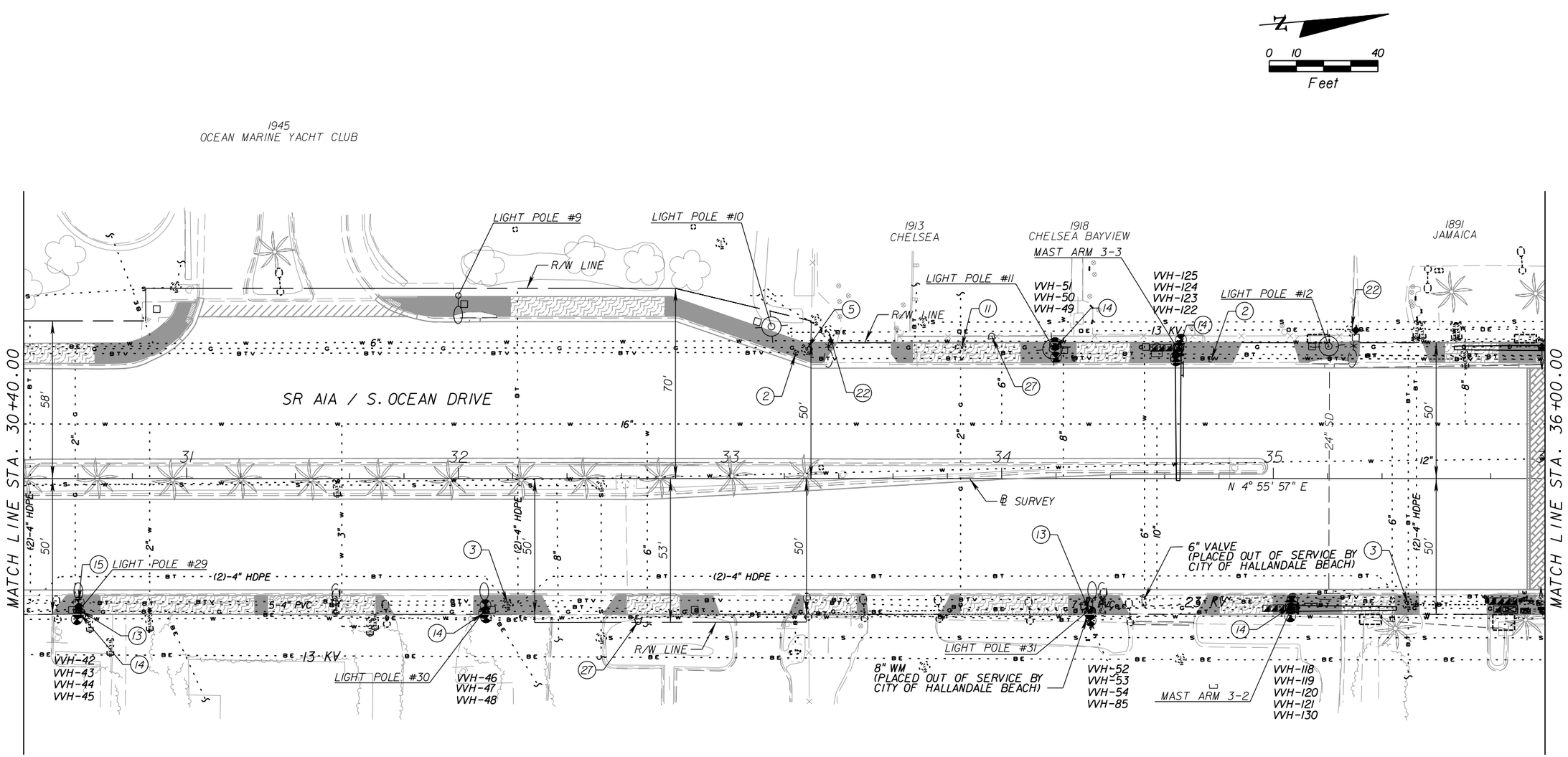

LEGEND

- 4" INTEGRAL COLORED CONCRETE SIDEWALK [COLOR SHALL BE SCOFIELD CHROMIX #5130 (SPRING BEIGE)]
- 2' DETECTABLE WARNING SURFACE
- LIMITS OF MILLING & RESURFACING
- 4" COLORED CONCRETE SIDEWALK WITH SURFACE-SEEDED AGGREGATE FINISH
- (X) EXISTING UTILITY DISPOSITIONS (SEE UTILITY ADJUSTMENTS LEGEND)
- VVH-XX DENOTES LOCATIONS OF VERIFIED UTILITIES (SEE SUMMARY OF VERIFIED UTILITIES FOR MORE INFORMATION)

REVISIONS			
DATE	DESCRIPTION	DATE	DESCRIPTION

A&P Consulting Transportation Engineers Corp.
10305 N.W. 41 Street, suite 115
Miami, FL 33178
(305) 592-7283 / fax: (305) 593-1594
CA No. : EB-0007797
Eithel M. Sierra, P.E. No. 55401

STATE OF FLORIDA
DEPARTMENT OF TRANSPORTATION

ROAD NO.	COUNTY	FINANCIAL PROJECT ID
A1A	BROWARD	428727-1-52-01

UTILITY ADJUSTMENTS

SHEET NO. 36

NOTICE: THE OFFICIAL RECORD OF THIS SHEET IS THE ELECTRONIC FILE SIGNED AND SEALED UNDER RULE 61G15-23.003, F.A.C.

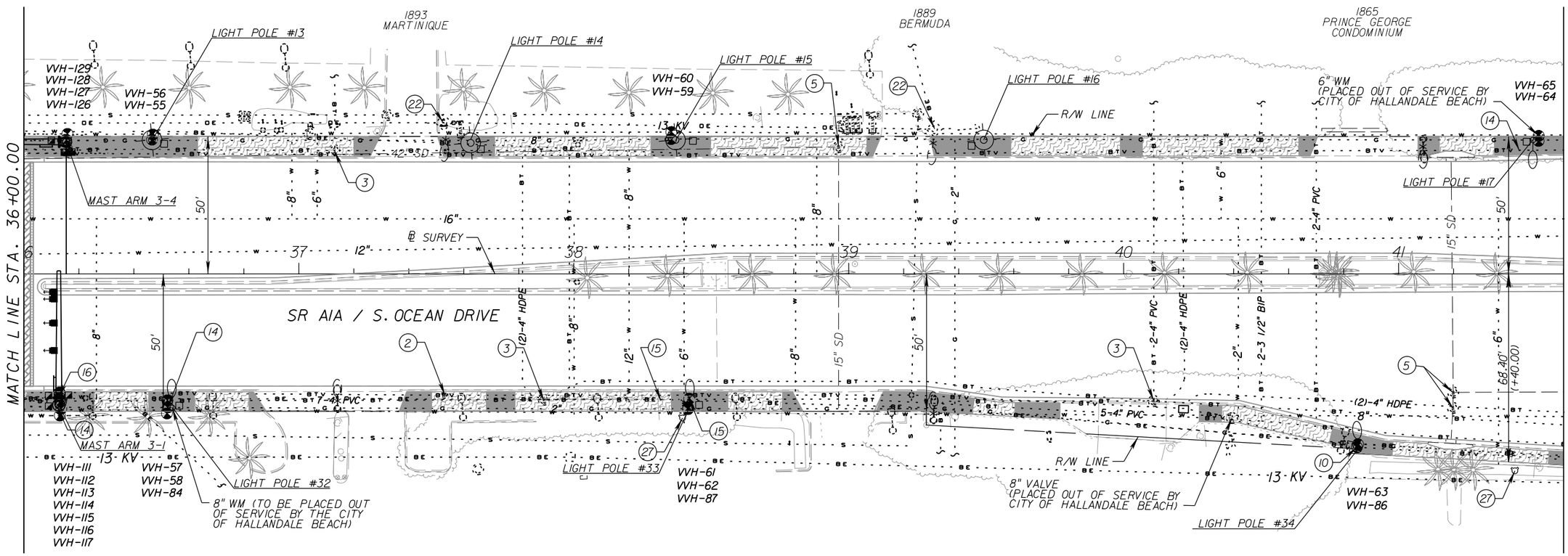

LEGEND

- PATTERNED ASPHALT PEDESTRIAN CROSSWALK
- 4" INTEGRAL COLORED CONCRETE SIDEWALK [COLOR SHALL BE SCOFIELD CHROMIX #5130 (SPRING BEIGE)]
- 2' DETECTABLE WARNING SURFACE
- 4" COLORED CONCRETE SIDEWALK WITH SURFACE-SEEDED AGGREGATE FINISH
- (X) EXISTING UTILITY DISPOSITIONS (SEE UTILITY ADJUSTMENTS LEGEND)
- VVH-XX DENOTES LOCATIONS OF VERIFIED UTILITIES (SEE SUMMARY OF VERIFIED UTILITIES FOR MORE INFORMATION)

REVISIONS			
DATE	DESCRIPTION	DATE	DESCRIPTION

A&P Consulting Transportation Engineers Corp.
10305 N.W. 41 Street, suite 115
Miami, FL 33178
(305) 592-7283 / fax: (305) 593-1594
CA No. : EB-0007797
Eithel M. Sierra, P.E. No. 55401

STATE OF FLORIDA
DEPARTMENT OF TRANSPORTATION

ROAD NO.	COUNTY	FINANCIAL PROJECT ID
AIA	BROWARD	428727-1-52-01

UTILITY ADJUSTMENTS

SHEET NO. 37

NOTICE: THE OFFICIAL RECORD OF THIS SHEET IS THE ELECTRONIC FILE SIGNED AND SEALED UNDER RULE 61G15-23.003, F.A.C.

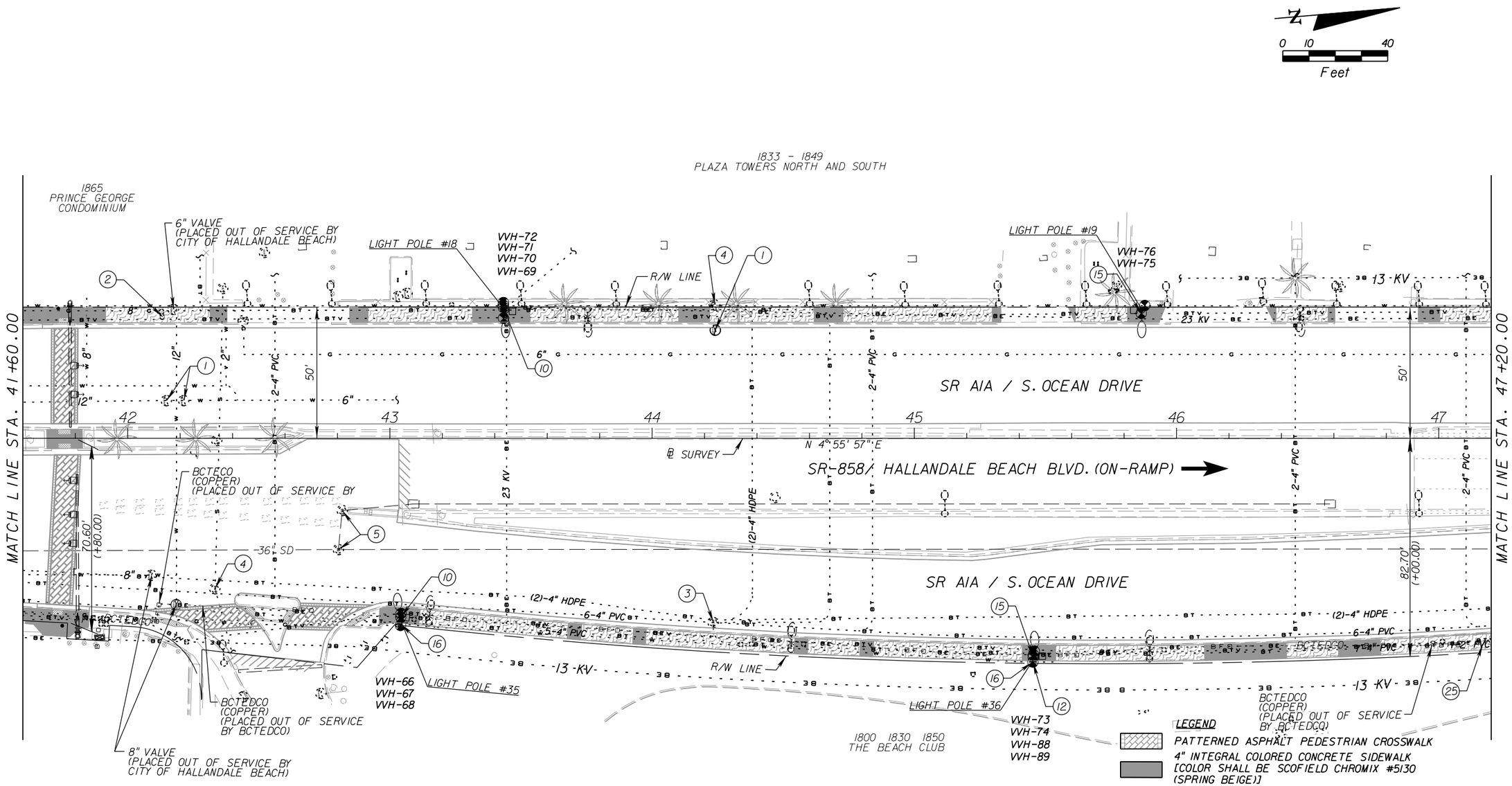

REVISIONS			
DATE	DESCRIPTION	DATE	DESCRIPTION

A&P Consulting Transportation Engineers Corp.
10305 N.W. 41 Street, suite 115
Miami, FL 33178
(305) 592-7283 / fax: (305) 593-1594
CA No. : EB-0007797
Eithel M. Sierra, P.E. No. 55401

STATE OF FLORIDA
DEPARTMENT OF TRANSPORTATION

ROAD NO.	COUNTY	FINANCIAL PROJECT ID
AIA	BROWARD	428727-1-52-01

UTILITY ADJUSTMENTS

SHEET NO.
38

NOTICE: THE OFFICIAL RECORD OF THIS SHEET IS THE ELECTRONIC FILE SIGNED AND SEALED UNDER RULE 61G15-23.003, F.A.C.

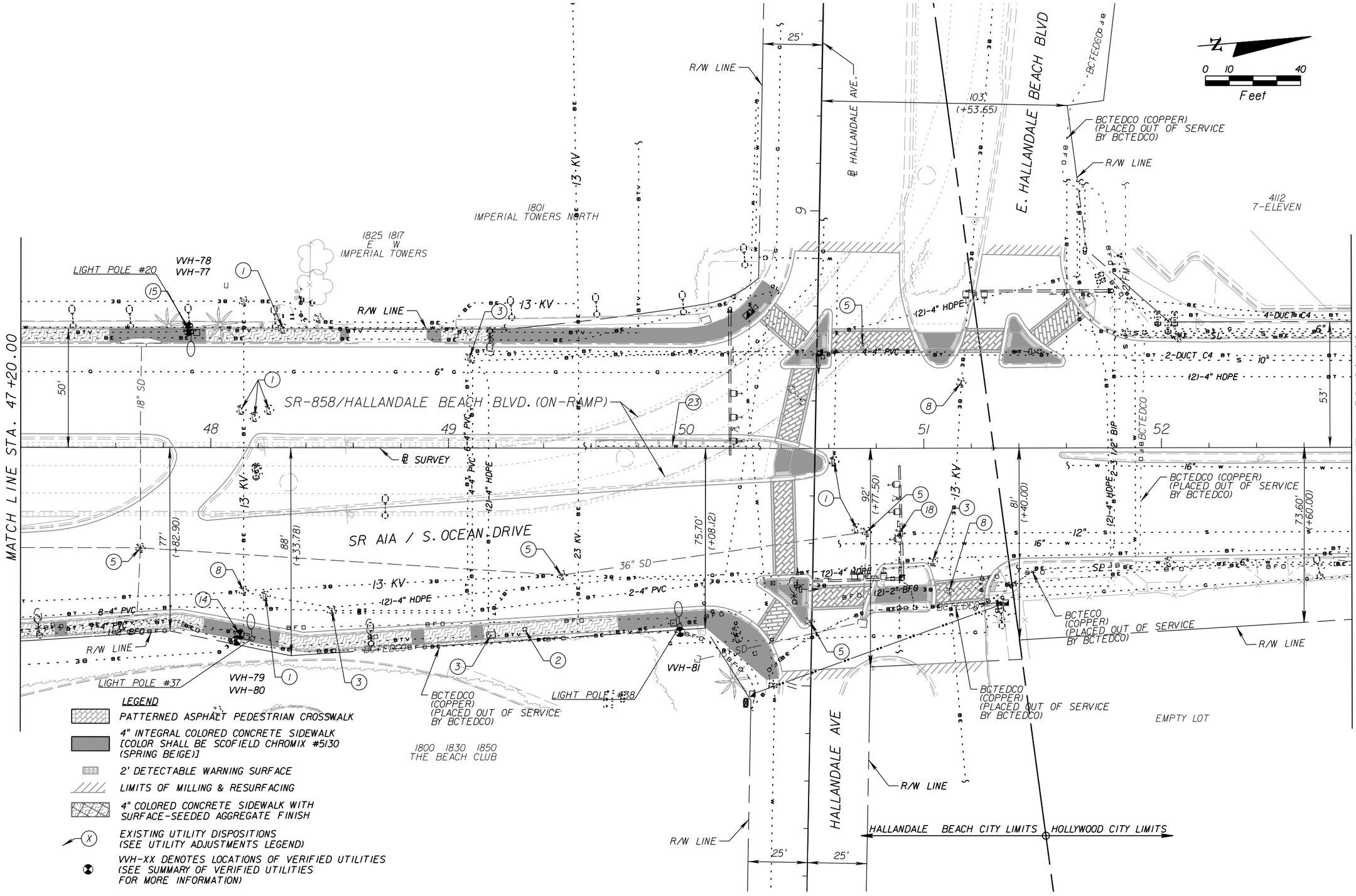

REVISIONS			
DATE	DESCRIPTION	DATE	DESCRIPTION

A&P Consulting Transportation Engineers Corp.
10305 N.W. 41 Street, suite 115
Miami, FL 33178
(305) 592-7283 / fax: (305) 593-1594
CA No. : EB-0007797
Eithel M. Sierra, P.E. No. 55401

STATE OF FLORIDA
DEPARTMENT OF TRANSPORTATION

ROAD NO.	COUNTY	FINANCIAL PROJECT ID
AIA	BROWARD	428727-1-52-01

UTILITY ADJUSTMENTS

SHEET NO. 39

NOTICE: THE OFFICIAL RECORD OF THIS SHEET IS THE ELECTRONIC FILE SIGNED AND SEALED UNDER RULE 61G15-23.003, F.A.C.

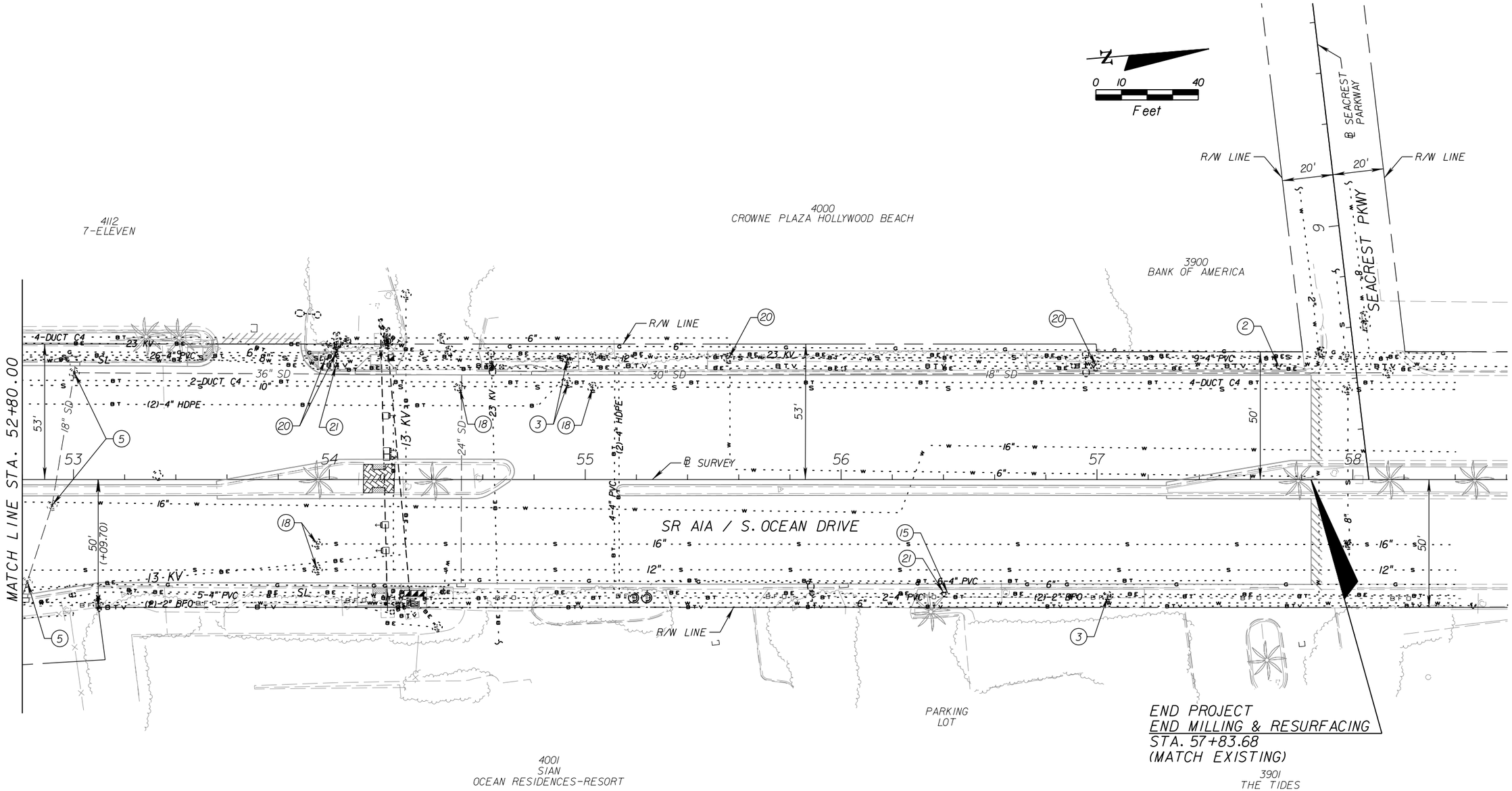

LEGEND

- 2' DETECTABLE WARNING SURFACE
- LIMITS OF MILLING & RESURFACING
- (X) EXISTING UTILITY DISPOSITIONS (SEE UTILITY ADJUSTMENTS LEGEND)
- VVH-XX DENOTES LOCATIONS OF VERIFIED UTILITIES (SEE SUMMARY OF VERIFIED UTILITIES FOR MORE INFORMATION)

NOTICE: THE OFFICIAL RECORD OF THIS SHEET IS THE ELECTRONIC FILE SIGNED AND SEALED UNDER RULE 61G15-23.003, F.A.C.

REVISIONS			
DATE	DESCRIPTION	DATE	DESCRIPTION

A&P Consulting Transportation Engineers Corp.
10305 N.W. 41 Street, suite 115
Miami, FL 33178
(305) 592-7283 / fax: (305) 593-1594
CA No. : EB-0007797
Eithel M. Sierra, P.E. No. 55401

STATE OF FLORIDA
DEPARTMENT OF TRANSPORTATION

ROAD NO.	COUNTY	FINANCIAL PROJECT ID
AIA	BROWARD	428727-1-52-01

UTILITY ADJUSTMENTS

SHEET NO. 40

SUMMARY OF VERIFIED UTILITIES

Vvh #	UTILITY DESCRIPTION (Owner, type)	SIZE	MATERIALS	B/L and/or C/L STATION	B/L and/or C/L OFFSET	B/L and/or C/L LT/RT	EXISTING GROUND ELEVATION	TOP ELEVATION	COMMENTS
1	AT&T, BT DUCT SYSTEM	24"x30"	ROUGH POUR	11+59.19	46.84'	RT	2.54'	-0.14'	FOUND (2) 4" ACP BT PIPES ABOVE BT DUCT .
									T.C. = 2.68', B.C. = 5.72'
2	FLORIDA POWER & LIGHT-BROWARD, BE	1-1/2"	PVC	11+58.97	50.95'	RT	2.84'	1.74'	WATER NOT FOUND. FOUND IRRIGATION
									LINE AT DEPTH OF 0.50 FEET
3	TECO PEOPLES GAS SOUTH FLORIDA, GAS	2''	W/STL	11+59.07	49.01'	RT	2.61'	-0.66'	NO COMMENTS
4	CITY OF HALLANDALE BEACH, WATER	8''	C.I.	11+58.23	54.86'	RT	2.94'	-0.11'	NO COMMENTS
5	COMCAST, CATV	1''	PLA	13+96.13	45.70'	RT	2.73'	1.68'	FOUND (2) 1' PLA CATV T.C.=1.05' B.C.=1.21'
6	AT&T, BT DUCT SYSTEM	4''	PVC / ACP	13+96.16	48.10'	RT	2.62'	-1.10'	FOUND (4) 4" PVC/ACP BT T.C.=3.72' B.C.=6.80' ALSO FOUND
									(1) 24"X36" BT DUCT WITHIN THE SAME TOP AND BOTTOM COVER;
									T.C. = 3.72', B.C. = 6.80'.
7	TECO PEOPLES GAS SOUTH FLORIDA, GAS	2''	W/STL	13+96.16	48.81'	RT	2.63'	-1.77'	NO COMMENTS
8	CITY OF HALLANDALE BEACH, WATER	8''	C.I.	13+95.76	50.88'	RT	2.80'	-1.18'	ALSO FOUND (1) 1/2" GALV UNKNOWN UTILITY;
									T.C. = 1.60', B.C= 1.68'
9	AT&T, BT DUCT SYSTEM	4''	ACP	14+91.88	45.62'	LT	2.51'	-0.41'	FOUND (2) 4" BT, T.C. = 2.92', B.C. =3.25'
10	TECO PEOPLES GAS SOUTH FLORIDA, GAS	8''	W/STL	14+92.09	48.22'	LT	2.46'	-1.03'	NO COMMENTS
11	CITY OF HALLANDALE BEACH, WATER	8''	ACP	14+91.63	50.47'	LT	2.55'	-1.73'	NO COMMENTS
12	COMCAST, CATV	1''	PLA	15+96.27	44.01'	RT	2.55'	1.25'	FOUND (2) 1' PLA CATV T.C.=1.30' B.C.=1.34'
13	AT&T, BT DUCT SYSTEM	4''	ACP	15+96.78	46.90'	RT	2.57'	-1.20'	FOUND (6) 4" ACP BT ,T.C.=3.77' B.T.=6.77'
									ALSO FOUND (1) 4" C.I. PIPE AT A DEPTH OF 3.05'
									AND 1 STREET LIGHT CONDUIT TO A DEPTH OF OF 2.00'.
									FIELD CREW WAS NOT ABLE TO SEE UTILITY DUE TO WATER.
14	TECO PEOPLES GAS SOUTH FLORIDA, GAS	2''	W/STL	15+97.08	48.59'	RT	2.57'	-0.96'	NO COMMENTS
15	TECO PEOPLES GAS SOUTH FLORIDA, GAS	2''	W/STL	18+03.98	50.15'	RT	2.37'	-0.39'	ALSO FOUND (1)6" C.I. UNKNOWN UTILITY ABOVE GAS LINE;
									T.C. = 2.20', B.C. = 2.70'.
16	CITY OF HALLANDALE BEACH, WATER	8''	C.I.	18+05.67	49.27'	RT	2.36'	-0.84'	THERE IS A TELEPHONE LINE AT APPROXIMATELY 3.20' WEST OF
									THIS TEST HOLE LOCATION, AND APPROXIMATELY 5.0' WEST OF
									PROPOSED CENTER OF LIGHT POLE.
17	COMCAST, CATV	2''	PVC	18+80.17	45.64'	LT	2.48'	0.63'	FOUND (2) 1' PLA CATV T.C.=1.85' B.C.=2.35'
18	AT&T, TELEPHONE	4''	PVC	18+80.27	43.69'	LT	2.30'	1.30'	ALSO FOUND (1) 1/2" PLA TELEPHONE CABLE WITHIN THE SAME
									TOP AND BOTTOM COVER (T.C. = 1.00, B.C. = 1.70').
									IN ADDITION FIELD CREW FOUND (1) 2" PVC B.E.; T.C.= 1.50'
									B.C.=1.67', LOCATED APPROXIMATELY 4" WEST OF TELEPHONE.
19	TECO PEOPLES GAS SOUTH FLORIDA, GAS	8''	W/STL	18+80.43	47.42'	LT	2.27'	-0.53'	NO COMMENTS
20	CITY OF HALLANDALE BEACH, WATER	8''	ACP	18+79.38	50.34'	LT	2.63'	-1.27'	NO COMMENTS
21	AT&T, BT DUCT SYSTEM	4''	ACP	19+53.69	44.81'	RT	2.72'	-0.08'	FOUND (6) 4" ACP BT, T.C.= 2.80' B.C.= 5.39'
									ALSO FOUND (2) 2" PLA CATV ABOVE TELEPHONE TO A DEPTH OF
									1.37', AND ON THE EAST SIDE OF CATV, FOUND (1) STREET
									LIGHT CONDUIT TO A DEPTH OF 1.48'.
22	TECO PEOPLES GAS SOUTH FLORIDA, GAS	2''	W/STL	19+53.87	47.91'	RT	2.60'	-0.55'	NO COMMENTS
23	TECO PEOPLES GAS SOUTH FLORIDA, GAS	8''	W/STL	20+87.53	47.78'	LT	2.79'	-0.19'	NO COMMENTS
24	CITY OF HALLANDALE BEACH, WATER	8''	ACP	20+87.96	50.18'	LT	2.92'	-0.81'	ALSO FOUND (1) 1" PVC B.E. T.C. = 0.70', B.C. = 0.78'
									ABOVE UTILITY
25	TECO PEOPLES GAS SOUTH FLORIDA, GAS	2''	W/STL	25+91.13	49.10'	RT	2.50'	-1.10'	FIELD CREW WAS NOT ABLE TO SEE UTILITY DUE TO WATER.
									UTILITY LOCATED BY AIRLANCE.
26	AT&T, BT DUCT SYSTEM	4''	ACP	22+56.61	48.95'	RT	2.48'	-0.30'	FOUND (8) 4" ACP BT T.C.=2.78' B.C.=5.78', FIELD CREW WAS
									NOT ABLE TO SEE UTILITY DUE TO WATER. UTILITY LOCATED
27	TECO PEOPLES GAS SOUTH FLORIDA, GAS	2''	W/STL	22+56.66	49.31'	RT	2.49'	-0.47'	BY COMPANY.
									NO COMMENTS
28	CITY OF HALLANDALE BEACH, WATER	8''	ACP	22+56.81	51.35'	RT	2.52'	-1.08'	FIELD CREW WAS NOT ABLE TO SEE UTILITY DUE TO WATER.
									UTILITY LOCATED BY AIRLANCE.
29	TECO PEOPLES GAS SOUTH FLORIDA, GAS	8''	W/STL	24+24.96	47.39'	LT	2.26'	-0.21'	NO COMMENTS
30	CITY OF HALLANDALE BEACH, WATER	8''	ACP	24+23.27	49.59'	LT	2.32'	-1.25'	TEST HOLE EXCAVATED ON GRASS, CHISX WAS INSTALLED ON SWK.
31	CITY OF HALLANDALE BEACH, WATER	8''	ACP	27+15.56	50.48'	LT	3.36'	-1.20'	ALSO FOUND (1) 1" & (1) 2" PVC IRRIGATION LINE ;
									T.C. = 0.70', B.C. = 0.96'.
32	COMCAST, CATV	SEE NOTES	PVC / PLA	24+24.78	45.29'	LT	2.33'	1.23'	FOUND (1) 4" PVC, (3) 1/2" PLA CABLE AND (1) 1" PLA
									CABLE AND (1) 1" PLA CABLE WITHIN THE SAME TOP AND
33	TECO PEOPLES GAS SOUTH FLORIDA, GAS	2''	W/STL	24+24.78	49.22'	LT	2.32'	0.05'	BOTTOM COVER (T.C. = 1.10, B.C. = 2.60).
									NO COMMENTS
34	TECO PEOPLES GAS SOUTH FLORIDA, GAS	8''	W/STL	27+15.61	48.73'	LT	3.03'	0.33'	THERE IS A STORM LINE 2.70 FEET TO THE EAST OF THIS TEST
									HOLE LOCATION

REVISIONS

DATE	DESCRIPTION	DATE	DESCRIPTION

FRANK PARUAS, PSM, PROJECT SURVEYOR
LICENSE NUMBER 6625
F.R. ALEMAN & ASSOCIATES, INC.
10305 N.W. 41 STREET, SUITE 200
MIAMI, FLORIDA 33178
CERTIFICATE OF AUTHORIZATION LB 6785

STATE OF FLORIDA
DEPARTMENT OF TRANSPORTATION

ROAD NO.	COUNTY	FINANCIAL PROJECT ID
A1A	BROWARD	428727-1-52-01

SUMMARY OF VERIFIED UTILITIES

SHEET NO. UTV-1

NOTICE: THE OFFICIAL RECORD OF THIS SHEET IS THE ELECTRONIC FILE SIGNED AND SEALED UNDER RULE 5J-17.062, F.A.C.

SUMMARY OF VERIFIED UTILITIES

Vvh #	UTILITY DESCRIPTION (Owner, type)	SIZE	MATERIALS	B/L and/or C/L			EXISTING GROUND ELEVATION	TOP ELEVATION	COMMENTS
				STATION	OFFSET	LT/RT			
35	AT&T, BT DUCT SYSTEM	4''	ACP	28+06.61	48.84'	RT	2.77'	-0.70'	FOUND (4) 4" ACP BT, T.C.=3.47 B.C=5.26' ALSO FOUND
									CONCRETE BELOW BT DUCT SYSTEM (4-4" PVC)
36	TECO PEOPLES GAS SOUTH FLORIDA, GAS	2''	W/STL	28+06.61	49.26'	RT	2.78'	-0.54'	TEST HOLE EXCAVATED ON GRASS, CHISX WAS INSTALLED ON SWK.
37	COMCAST, CATV	1/2"	PLA	28+07.46	45.35'	RT	2.75'	0.96'	FOUND (3) 1/2" PLA CATV, T.C.=1.79' B.C.=2.75' ALSO
									FOUND (1) 4" PVC TELEFHONE ; T.C. = 2.42'
38	CITY OF HALLANDALE BEACH, WATER	8''	D.I.	28+06.88	51.62'	RT	2.76'	-0.94'	ALSO FOUND ON TOP OF WATER (1) 1-1/2" STEEL T.C. =1.65'
									AND ON WEST SIDE (1) 1/2" PIPE T.C.=0.97'
39	COMCAST, CATV	SEE NOTES	PVC	29+29.41	44.79'	LT	2.53'	1.40'	FOUND (1) 1/2" PLA CABLE, (1) 1" PLA CABLE AND (2) 2"
									CABLE WITHIN THE SAME TOP AND BOTTOM COVER (T.C. = 1.13',
									B.C. = 1.95').
40	TECO PEOPLES GAS SOUTH FLORIDA, GAS	8''	W/STL	29+29.20	46.15'	LT	2.50'	-0.35'	NO COMMENTS
41	CITY OF HALLANDALE BEACH, WATER	8''	ACP	29+29.20	48.35'	LT	2.52'	-1.23'	FIELD CREW WAS NOT ABLE TO SEE UTILITY DUE TO WATER.
									UTILITY LOCATED BY AIRLANCE.
42	COMCAST, CATV	1/2"	PLA	30+60.26	45.53'	RT	2.36'	1.26'	FOUND (2) 1/2" PLA CATV T.C.=1.10' B.C.=1.26'
43	AT&T, BT DUCT SYSTEM	4''	ACP	30+60.34	48.27'	RT	2.26'	-0.54'	FOUND (6) 4" ACP BT T.C.=2.80' B.C.=4.80'
44	TECO PEOPLES GAS SOUTH FLORIDA, GAS	2''	W/STL	30+60.39	49.31'	RT	2.29'	-0.08'	NO COMMENTS
45	CITY OF HALLANDALE BEACH, WATER	8''	C.I.	30+59.54	51.76'	RT	2.64'	-1.46'	NO COMMENTS
46	AT&T, BT DUCT SYSTEM	26"X24"	SMOOTH POUR	32+09.99	46.58'	RT	2.36'	0.27'	FOUND (6) 4" CONDUITS ENCASED IN CONCRETE
47	TECO PEOPLES GAS SOUTH FLORIDA, GAS	2''	W/STL	32+09.42	49.45'	RT	2.41'	-0.60'	NO COMMENTS
48	CITY OF HALLANDALE BEACH, WATER	8''	C.I.	32+10.18	51.10'	RT	2.85'	-0.49'	NO COMMENTS
49	TECO PEOPLES GAS SOUTH FLORIDA, GAS	8''	W/STL	34+19.63	49.17'	LT	2.15'	-0.20'	NO COMMENTS
50	COMCAST, CATV	1-1/2"	PLA	34+19.96	44.54'	LT	2.43'	0.98'	FOUND (4) 1-1/2" PLA CATV, T.C.=1.45' B.C.=2.12' ALSO
									FOUND (1) 2" BE PVC T.C. = 1.50' B.C. = 1.66'. FIELD
									LOCATED ELECTRIC AND CATV LINES. THIS PIPE WAS NOT
									LOCATED AS PER CLIENT'S REQUEST.
51	CITY OF HALLANDALE BEACH, WATER	8''	ACP	34+19.64	49.89'	LT	2.23'	-1.57'	NO COMMENTS
52	AT&T, BT DUCT SYSTEM	4''	ACP	34+32.32	48.96'	RT	2.38'	-1.07'	FOUND (6) 4" ACP BT T.C.=3.45' B.C.=4.79'
53	TECO PEOPLES GAS SOUTH FLORIDA, GAS	2''	W/STL	34+32.62	49.49'	RT	2.40'	-0.95'	NO COMMENTS
54	CITY OF HALLANDALE BEACH, WATER	8''	C.I.	34+32.62	49.99'	RT	2.42'	-1.13'	FOUND TOP COVER FROM WEST SIDE OF CONCRETE.
									FIELD CREW WAS NOT ABLE TO SEE UTILITY DUE TO WATER.
									UTILITY LOCATED BY AIRLANCE.
55	TECO PEOPLES GAS SOUTH FLORIDA, GAS	8''	W/STL	36+46.60	48.88'	LT	2.64'	0.08'	NO COMMENTS
56	CITY OF HALLANDALE BEACH, WATER	8''	ACP	36+46.88	50.72'	LT	2.81'	-0.94'	NO COMMENTS
57	AT&T, BT DUCT SYSTEM	4''	ACP	36+52.20	45.99'	RT	2.75'	-1.15'	FOUND (6) 4" ACP BT T.C.=3.90' B.C.=5.17'
58	TECO PEOPLES GAS SOUTH FLORIDA, GAS	2''	W/STL	36+52.35	48.58'	RT	2.65'	-1.14'	FIELD CREW WAS NOT ABLE TO SEE UTILITY DUE TO WATER.
									UTILITY LOCATED BY AIRLANCE.
59	TECO PEOPLES GAS SOUTH FLORIDA, GAS	8''	W/STL	38+35.37	49.06'	LT	2.87'	0.17'	NO COMMENTS
60	CITY OF HALLANDALE BEACH, WATER	8''	ACP	38+35.47	51.63'	LT	2.87'	-1.03'	NO COMMENTS
61	AT&T, BT DUCT SYSTEM	4''	ACP	38+41.61	48.63'	RT	2.68'	-1.62'	FOUND (6) 4" ACP BT T.C.=4.30' B.C.=6.98'.
									FIELD CREW WAS NOT ABLE TO SEE UTILITY DUE TO WATER.
									UTILITY LOCATED BY AIRLANCE.
62	TECO PEOPLES GAS SOUTH FLORIDA, GAS	2''	W/STL	38+41.56	49.19'	RT	2.70'	-0.90'	FIELD CREW WAS NOT ABLE TO SEE UTILITY DUE TO WATER.
									UTILITY LOCATED BY AIRLANCE.
63	FLORIDA POWER & LIGHT-BROWARD, BE	2''	PVC	40+84.83	63.01'	RT	2.03'	0.38'	NO COMMENTS
64	TECO PEOPLES GAS SOUTH FLORIDA, GAS	8''	W/STL	41+50.88	48.40'	LT	2.54'	0.56'	NO COMMENTS
65	CITY OF HALLANDALE BEACH, WATER	8''	ACP	41+50.95	50.23'	LT	2.85'	-0.75'	NO COMMENTS
66	TECO PEOPLES GAS SOUTH FLORIDA, GAS	2''	W/STL	43+04.03	71.36'	RT	2.66'	0.41'	FOUND (2) 2" PVC IRRIGATION T.C.=1.80' B.C.=1.96'
67	FLORIDA POWER & LIGHT-BROWARD, BE	2''	PVC	43+04.12	68.20'	RT	2.45'	0.00'	NO COMMENTS
68	AT&T, FOC DUCT SYSTEM	1-1/2"	PLA	43+04.23	66.79'	RT	2.44'	0.24'	FOUND (2) 1-1/2"" PLA FOC T.C.=2.20' B.C.=2.70'
69	COMCAST, CATV	1/2"	PLA	43+43.28	51.78'	LT	2.92'	-2.48'	FIELD CREW WAS NOT ABLE TO SEE UTILITY DUE TO WATER.
									UTILITY LOCATED BY AIRLANCE.
70	AT&T, BT	3''	PLA	43+43.29	45.80'	LT	2.72'	0.15'	NO COMMENTS
71	CITY OF HALLANDALE BEACH, WATER	8''	ACP	43+43.18	50.80'	LT	2.95'	-1.26'	NO COMMENTS
72	FLORIDA POWER & LIGHT-BROWARD, BE	1/2"	STL	43+43.23	49.95'	LT	2.81'	2.13'	NO COMMENTS
73	COMCAST, CATV	12"X16"	ROUGH POUR	45+45.32	83.39'	RT	2.63'	1.57'	NO COMMENTS
74	AT&T, BT DUCT SYSTEM	1-1/2"	PLA	45+45.74	81.17'	RT	2.61'	-0.06'	FOUND (2) 1-1/2" PLA BT T.C.=2.67' B.C=2.87'
75	COMCAST, CATV	2''	PLA	45+86.51	47.66'	LT	2.81'	0.79'	NO COMMENTS
76	CITY OF HALLANDALE BEACH, WATER	8''	ACP	45+87.87	50.65'	LT	3.00'	0.41'	NO COMMENTS
77	COMCAST, CATV	2''	PLA	47+90.58	49.12'	LT	2.59'	-0.05'	NO COMMENTS
78	CITY OF HALLANDALE BEACH, WATER	8''	ACP	47+90.45	50.64'	LT	2.59'	-0.23'	NO COMMENTS
79	FLORIDA POWER & LIGHT-BROWARD, BE DUCT SYSTEM	36"X27"	ROUGH POUR	48+12.38	78.74'	RT	2.25'	-1.35'	NO COMMENTS
80	COMCAST, CATV	12"X18"	ROUGH POUR	48+10.92	81.24'	RT	3.99'	2.14'	NO COMMENTS
81	COMCAST, CATV	2''	PVC	49+97.51	77.30'	RT	3.43'	1.10'	FOUND (2) 2" PVC CATV T.C.=2.33' B.C.=2.66'
82	CITY OF HALLANDALE BEACH, WATER	24"X12"	ROUGH POUR	25+90.96	49.94'	RT	2.51'	-0.64'	ALSO FOUND ON TOP OF WATER (1) 1/2" CABLE RUNNING
									NW T.C. =3.10'.

REVISIONS

DATE	DESCRIPTION	DATE	DESCRIPTION

FRANK PARUAS, PSM, PROJECT SURVEYOR
LICENSE NUMBER 6625
F.R. ALEMAN & ASSOCIATES, INC.
10305 N.W. 41 STREET, SUITE 200
MIAMI, FLORIDA 33178
CERTIFICATE OF AUTHORIZATION LB 6785

STATE OF FLORIDA
DEPARTMENT OF TRANSPORTATION

ROAD NO.	COUNTY	FINANCIAL PROJECT ID
AIA	BROWARD	428727-1-52-01

SUMMARY OF VERIFIED UTILITIES

SHEET NO.
UTV-2

NOTICE: THE OFFICIAL RECORD OF THIS SHEET IS THE ELECTRONIC FILE SIGNED AND SEALED UNDER RULE 5J-17.062, F.A.C.

SUMMARY OF VERIFIED UTILITIES

Vvh #	UTILITY DESCRIPTION (Owner, type)	SIZE	MATERIALS	B/L and/or C/L			EXISTING GROUND ELEVATION	TOP ELEVATION	COMMENTS
				STATION	OFFSET	LT/RT			
83	AT&T, BT DUCT SYSTEM	4"	ACP	25+91.21	48.03'	RT	2.30'	-1.60'	FOUND (6) 4" ACP BT T.C.=3.90' B.C.=5.39' ALSO FOUND
									ON WEST SIDE OF BT DUCT SYSTEM (2) 1/2"CABLE T.C.=1.15'.
									FIELD CREW WAS NOT ABLE TO SEE UTILITY DUE TO WATER.
									UTILITY LOCATED BY AIRLANCE.
84	CITY OF HALLANDALE BEACH, WATER	8"	C.I.	36+52.03	50.75'	RT	3.85'	-0.73'	FIELD CREW WAS NOT ABLE TO SEE UTILITY DUE TO WATER.
									UTILITY LOCATED BY AIRLANCE.
85	COMCAST, CATV	24"X12"	ROUGH POUR	34+32.75	52.31'	RT	2.44'	0.94'	FIELD CREW WAS NOT ABLE TO SEE UTILITY DUE TO CONCRETE.
86	TECO PEOPLES GAS SOUTH FLORIDA, GAS	2"	W/STL	40+85.21	61.96'	RT	1.99'	-0.05'	NO COMMENTS
87	COMCAST, CATV	2"	PVC	38+41.97	45.38'	RT	2.66'	1.50'	FOUND (2) 2" PVC CATV T.C.=1.16' B.C.=30'
88	BROWARD COUNTY TRAFFIC, FIBER OPTIC CABLE	2"	PLA	45+45.41	82.56'	RT	2.63'	0.13'	ALSO FOUND (1) 2"PVC ST-LIGHTS T.C.=2.70' B.C.=2.86'
89	CITY OF HALLANDALE BEACH, WATER	4"	PVC	45+45.20	85.32'	RT	2.59'	1.99'	NO COMMENTS
90	TECO PEOPLES GAS SOUTH FLORIDA, GAS	2"	W/STL	10+76.53	48.6944	RT	2.716	-0.714	NO COMMENTS
91	FLORIDA POWER & LIGHT-BROWARD, BE DUCT SYSTEM	30"X16"	ROUGH POUR	10+76.48	46.0813	RT	2.641	-1.689	NO COMMENTS
92	AT&T, BT DUCT SYSTEM	4"	PVC	10+76.47	45.5314	RT	2.614	0.034	NO COMMENTS
93	COMCAST, CATV	1/2"	PLA	10+76.40	43.8316	RT	2.636	1.336	FOUND (2) 11/2" PVC STR. LIGHTS T.C. = 2.23', B.C. = 2.4'
94	CITY OF HALLANDALE BEACH, WATER	8"	C.I.	9+54.99	34.56'	RT	3.52'	1.63'	FOUND WATER IN CONFLICT WHERE CATV WAS REQUESTED
95	FLORIDA POWER & LIGHT-BROWARD, BE DUCT SYSTEM	SEE NOTES	PVC	9+55.23	33.77'	RT	3.36'	2.11'	FOUND (1) 2" AND (1) 4" PVC CATV, (1) 2" AND (1) 4"
									PVC CATV, (1) 2" AND (1) 4" PVC BE WITHIN THE SAME
									TOP AND BOTTOM COVER (T.C. = 1.25, B.C. = 3.23'). ALSO
									FOUND ON EAST SIDE OF BE (1) 8" C.I. WATER AT 1.89'.
96	TECO PEOPLES GAS SOUTH FLORIDA, GAS	2"	W/STL	9+53.01	37.58'	LT	3.17'	0.07'	FOUND FPLDUCT AT APPROXIMATED 3' EAST OF GAS PIPE
97	CITY OF HALLANDALE BEACH, WATER	8"	ACP	9+52.55	39.61'	LT	3.18'	-0.12'	NO COMMENTS
98	TECO PEOPLES GAS SOUTH FLORIDA, GAS	2"	W/STL	26+89.18	48.51'	RT	2.73'	-0.76'	NO COMMENTS
99	AT&T, BT DUCT SYSTEM	4"	ACP	26+89.41	45.75'	RT	2.76'	-0.09'	NO COMMENTS
100	CITY OF HALLANDALE BEACH, WATER	8"	C.I.	26+90.88	51.39'	RT	2.71'	-2.71'	FIELD CREW WAS NOT ABLE TO SEE UTILITY DUE TO WATER.
									UTILITY LOCATED BY AIRLANCE.
101	COMCAST, CATV	1"	PLA	26+89.64	43.86'	RT	2.73'	1.73'	ALSO FOUND (2) 1-1/2" PLA CATV
102	TECO PEOPLES GAS SOUTH FLORIDA, GAS	2"	W/STL	25+89.96	49.16'	RT	2.51'	-1.09'	NO COMMENTS
103	AT&T, BT DUCT SYSTEM	4"	ACP	25+89.90	48.14'	RT	2.50'	-1.43'	FOUND (6) 4" ACP CONDUITS. FIELD CREW WAS NOT ABLE TO SEE
									UTILITY DUE TO WATER. UTILITY LOCATED BY AIRLANCE.
104	CITY OF HALLANDALE BEACH, WATER	20"	CONCRETE	25+91.03	49.96'	RT	2.52'	-0.36'	FOUND ON TOP OF 8" WATER CONCRETE SLAB. FIELD CREW WAS
									NOT ABLE TO SEE UTILITY. UTILITY LOCATED BY AIRLANCE.
105	COMCAST, CATV	SEE NOTES	PLA	25+90.08	43.87'	RT	2.84'	1.74'	FOUND (2) 1/2"AND (1) 1" PLA CATV T.C.=1.10' B.C.=1.23'
106	AT&T, BT	1/4"	PLA	25+64.63	45.17'	LT	2.73'	1.86'	ALSO FOUND (1) 24" RCP STORM; T.C. = 3.80', B.C. = 5.80'
107	TECO PEOPLES GAS SOUTH FLORIDA, GAS	8"	STL	25+65.17	48.52'	LT	2.59'	-0.76'	NO COMMENTS
108	FLORIDA POWER & LIGHT-BROWARD, BE	1-1/2"	PVC	25+91.38	43.19'	LT	2.90'	1.67'	NO COMMENTS
110	CITY OF HALLANDALE BEACH, WATER	8"	C.I.	25+65.25	50.11'	LT	2.73'	-1.26'	NO COMMENTS
110	CITY OF HALLANDALE BEACH, WATER	8"	ACP	25+90.53	50.21'	LT	2.32'	-1.02'	NO COMMENTS
111	CITY OF HALLANDALE BEACH, WATER	8"	C.I.	36+13.06	51.51'	RT	3.43'	-1.34'	FIELD CREW WAS NOT ABLE TO SEE UTILITY DUE TO WATER.
									UTILITY LOCATED BY AIRLANCE.
112	TECO PEOPLES GAS SOUTH FLORIDA, GAS	2"	W/STL	36+13.60	49.05'	RT	2.46'	-1.09'	FIELD CREW WAS NOT ABLE TO SEE UTILITY DUE TO WATER.
									UTILITY LOCATED BY AIRLANCE.
113	AT&T, BT DUCT SYSTEM	4"	ACP	36+13.63	46.28'	RT	2.39'	-1.83'	FIELD CREW WAS NOT ABLE TO SEE UTILITY DUE TO WATER.
									UTILITY LOCATED BY AIRLANCE.
114	FLORIDA POWER & LIGHT-BROWARD, BE DUCT SYSTEM	1-1/2"	PVC	36+13.03	45.05'	RT	2.34'	1.14'	FOUND (2) 1-1/2" PVC BE AND (1) 2" PVC BE T.C.=1.20'
									B.C.=1.53'
115	AT&T, BT DUCT SYSTEM	1"	PLA	36+13.01	44.16'	RT	2.18'	1.28'	FOUND (2) 1" PLA BT AND (2) 1/2" PLA BT T.C.=0.90'
									B.C.=1.73'
116	CITY OF HALLANDALE BEACH, WATER	3"	C.I.	36+13.03	43.57'	RT	2.15'	0.05'	NO COMMENTS
117	COMCAST, CATV	1-1/2"	PLA	36+12.98	43.12'	RT	2.13'	1.63'	FOUND (2)1-1/2" AND (1)1/4" PLA CATV T.C.=0.50'B.C.=0.83'
118	TECO PEOPLES GAS SOUTH FLORIDA, GAS	2"	W/STL	35+06.35	47.23'	RT	2.14'	-0.96'	NO COMMENTS
119	AT&T, BT DUCT SYSTEM	4"	ACP	35+06.34	46.55'	RT	2.12'	0.12'	FOUND (8) 4" ACP BT T.C.=2.00' B.C.=4.50'. FIELD CREW WAS
									NOT ABLE TO SEE UTILITY DUE TO WATER. UTILITY LOCATED
									BY AIRLANCE.
120	FLORIDA POWER & LIGHT-BROWARD, BE	2"	PVC	35+06.88	45.03'	RT	2.11'	0.27'	NO COMMENTS
121	COMCAST, CATV	SEE NOTES	PLA	35+07.10	44.26'	RT	2.06'	1.31'	FOUND (3)1/2" PLA AND (1)1" PLA CATV ALSO FOUND ON WEST
									SIDES OF CATV (2) 4" PVC PIPE AT 0.50'
122	CITY OF HALLANDALE BEACH, WATER	8"	ACP	34+66.01	51.15'	LT	2.71'	-1.67'	FIELD CREW WAS NOT ABLE TO SEE UTILITY DUE TO WATER.
123	AT&T, BT DUCT SYSTEM	2"	PVC	34+64.06	44.59'	LT	2.61'	1.19'	ALSO FOUND (2)1" AND (1)1/2" PLA BT T.C.=1.42' B.C.=1.84'
124	TECO PEOPLES GAS SOUTH FLORIDA, GAS	8"	W/STL	34+65.14	48.71'	LT	2.41'	0.01'	NO COMMENTS
125	COMCAST, CATV	1-1/2"	PLA	34+64.13	43.51'	LT	2.58'	1.23'	FOUND (3) 1-1/2" PLA CATV T.C.=1.35' B.C.=1.85' ALSO
									FOUND STORM LINE AT 2.75'
126	TECO PEOPLES GAS SOUTH FLORIDA, GAS	8"	W/STL	36+15.43	48.77'	LT	2.58'	0.12'	NO COMMENTS
127	AT&T, BT	1/2"	PLA	36+15.75	45.36'	LT	2.70'	1.27'	FOUND (2) 1/2" PLA BT T.C.=1.43' B.C.=2.43' ALSO FOUND
									STORM IS 3.20' EAST OF TEST HOLE.

REVISIONS

DATE	DESCRIPTION	DATE	DESCRIPTION

FRANK PARUAS, PSM, PROJECT SURVEYOR
LICENSE NUMBER 6625
F.R. ALEMAN & ASSOCIATES, INC.
10305 N.W. 41 STREET, SUITE 200
MIAMI, FLORIDA 33178
CERTIFICATE OF AUTHORIZATION LB 6785

STATE OF FLORIDA
DEPARTMENT OF TRANSPORTATION

ROAD NO.	COUNTY	FINANCIAL PROJECT ID
A1A	BROWARD	428727-1-52-01

SUMMARY OF VERIFIED UTILITIES

SHEET NO. UTV-3

NOTICE: THE OFFICIAL RECORD OF THIS SHEET IS THE ELECTRONIC FILE SIGNED AND SEALED UNDER RULE 5J-17.062, F.A.C.

SUMMARY OF VERIFIED UTILITIES

Vvh #	UTILITY DESCRIPTION (Owner, type)	SIZE	MATERIALS	B/L and/or C/L			EXISTING GROUND ELEVATION	TOP ELEVATION	COMMENTS
				STATION	OFFSET	LT/RT			
128	COMCAST, CATV	2''	PVC	36+15.79	44.51'	LT	2.68'	1.28'	ALSO FOUND (2) 1-1/2" PLA CATV WITHIN THE SAME TOP AND AND BOTTOM COVER (T.C. = 1.40, B.C. = 1.78').
129	CITY OF HALLANDALE BEACH, WATER	8''	ACP	36+15.85	50.94'	LT	2.77'	-1.15'	NO COMMENTS
130	CITY OF HALLANDALE BEACH, WATER	8''	C.I.	35+06.19	50.77'	RT	1.98'	-4.12'	NO COMMENTS

REVISIONS			
DATE	DESCRIPTION	DATE	DESCRIPTION

FRANK PARUAS, PSM, PROJECT SURVEYOR
LICENSE NUMBER 6625
F.R. ALEMAN & ASSOCIATES, INC.
10305 N.W. 41 STREET, SUITE 200
MIAMI, FLORIDA 33178
CERTIFICATE OF AUTHORIZATION LB 6785

STATE OF FLORIDA
DEPARTMENT OF TRANSPORTATION

ROAD NO.	COUNTY	FINANCIAL PROJECT ID
A1A	BROWARD	428727-1-52-01

SUMMARY OF VERIFIED UTILITIES

SHEET NO.
UTV-4

emslerra 12/4/2013 5:39:57 PM H:\e\Projects\4287271520\roadway\SBVHRD04.dgn

NOTICE: THE OFFICIAL RECORD OF THIS SHEET IS THE ELECTRONIC FILE SIGNED AND SEALED UNDER RULE 5J-17.062, F.A.C.

SPECIFIC PURPOSE SURVEY

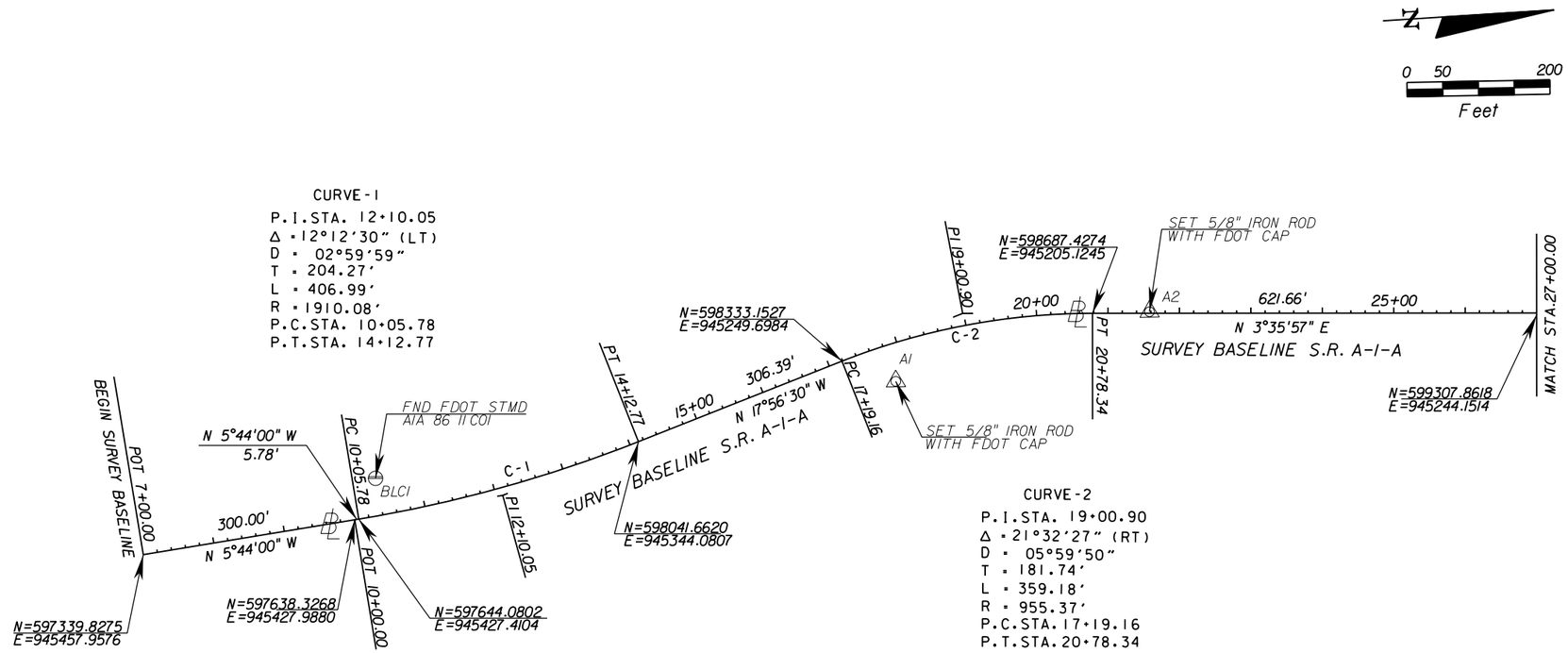

LEGEND

FDOT	FLORIDA DEPARTMENT OF TRANSPORTATION
&	AND
℄	BASELINE OF SURVEY
N	NORTHING
E	EASTING
LB	LICENSE BUSINESS
NO.	NUMBER
PK	PARKER KALON
P.I.	POINT OF INTERSECTION
P.O.T.	POINT ON TANGENT
P.C.C.	POINT OF COMPOUND CURVATURE
P.R.C.	POINT OF REVERSE CURVATURE
Δ	DELTA OF CURVE
D	DEGREE OF CURVE
T	TANGENT
L	LENGTH OF CURVE
R	RADIUS
PSM	PROFESSIONAL SURVEYOR AND MAPPER
RD.	ROAD
S.R.	STATE ROAD
STA.	STATION
ST.	STREET
W/	WITH
FND.	FOUND
△	IRON PIPE W/CAP
⊖	STAMPED DISC
⊙	SET 1" IRON PIPE
△	SET PK NAIL & WASHER
℄	BASELINE OF SURVEY

CURVE-2
P.I.STA. 19+00.90
Δ = 21°32'27" (RT)
D = 05°59'50"
T = 181.74'
L = 359.18'
R = 955.37'
P.C.STA.17+19.16
P.T.STA.20+78.34

BEARINGS AND COORDINATES ARE RELATIVE TO THE STATE PLANE COORDINATES, FLORIDA EAST ZONE, NORTH AMERICAN DATUM (NAD) OF 83/90 ADJUSTMENT AS PER 4 BLC POINTS PROVIDED BY DISTRIC IV SURVEY DEPT.IN THE NEAR VICINITY OF THE PROJECT
A BEARING OF N 4°41'24" W HAS BEEN ESTABLISHED BETWEEN MONUMENTS
BLC1 STAMPED FDOT AIA 86 11C01 TO
BLC2 STAMPED FDOT AIA 86 11C02
VERTICAL DATUM NAVD 1988
PROJECT UNITS US SURVEY FEET
FIELD BOOK REFERENCES 43/9560,
ELECTRONIC DATABASE CTLSRD01.DGN

SURVEYOR'S NOTES:

THIS PROJECT NETWORK CONTROL (PNC) IS BASED ON DISTRICT IV PROVIDED CONTROL POINTS (4) BLC1, BLC2, BLC3 AND BLC4. FROM N.G.S., NOAA
BLC1 FILE: BLC11790.110 000277089
BLC2 FILE: BLC21790.110 000277088
BLC3 FILE: BLC31730.110 000274115
BLC4 FILE: BLC41790.110 000277090

THE BASELINE SHOWN IS A "BEST FIT APPROACH" TO THE MEASUREMENTS OBTAINED TO THE EXISTING RIGHT OF WAY OCCUPATION FOUND.
SOME OF THE GEOMETRY OF THE BASELINE MAY DIFFER SLIGHTLY TO THE .PREVIOUS RECORDED VALUES

SURVEY LIMITS: S.R. A1A 300' SOUTH OF COUNTY LINE ROAD TO SEACREST PRWY

SURVEYOR'S CERTIFICATION
I HEREBY CERTIFY THIS SPECIFIC PURPOSE SURVEY WAS MADE FOR THE PURPOSE OF SURVEYING, REFERENCING, DESCRIBING AND MAPPING THE PRIMARY NETWORK CONTROL OR BASELINE FOR THE TRANSPORTATION FACILITY DEPICTED HEREON AND THAT SAID SURVEY WAS DONE UNDER MY RESPONSIBLE CHARGE AND MEETS THE MINIMUM TECHNICAL STANDARDS SET FORTH BY THE FLORIDA BOARD OF PROFESSIONAL SURVEYORS AND MAPPERS IN CHAPTER 5J-17 FLORIDA ADMINISTRATIVE CODE PURSUANT TO SECTION 472.027 FLORIDA STATUTES. THIS MAP CONSISTING OF SHEETS CTL-1 THROUGH CTL-3 IS A TRUE, ACCURATE AND COMPLETE DEPICTION OF THE RESULTS OF A FIELD SURVEY PERFORMED UNDER MY DIRECTION AND COMPLETED ON 4-26-12

SURVEYOR FRANK PARUAS PLS NUMBER 6625

NOTICE: THE OFFICIAL RECORD OF THIS SHEET IS THE ELECTRONIC FILE SIGNED AND SEALED UNDER RULE 5J-17.062, F.A.C.

REVISIONS			
DATE	DESCRIPTION	DATE	DESCRIPTION

FRANK PARUAS, PROJECT SURVEYOR
SURVEYOR LICENSE NUMBER 6625
F.R. ALEMAN & ASSOCIATES, INC.
10305 N.W. 41 STREET, SUITE 200
MIAMI, FLORIDA 33178
CERTIFICATE OF AUTHORIZATION LB 6785

STATE OF FLORIDA
DEPARTMENT OF TRANSPORTATION

ROAD NO.	COUNTY	FINANCIAL PROJECT ID
A1A	BROWARD	428727-1-52-01

PROJECT NETWORK CONTROL

SHEET NO.
CTL-1

emslerra 12/2/2013 7:11:41 PM H:\e\Projects\4287271520\roadway\CTLSRD01.dgn

SPECIFIC PURPOSE SURVEY

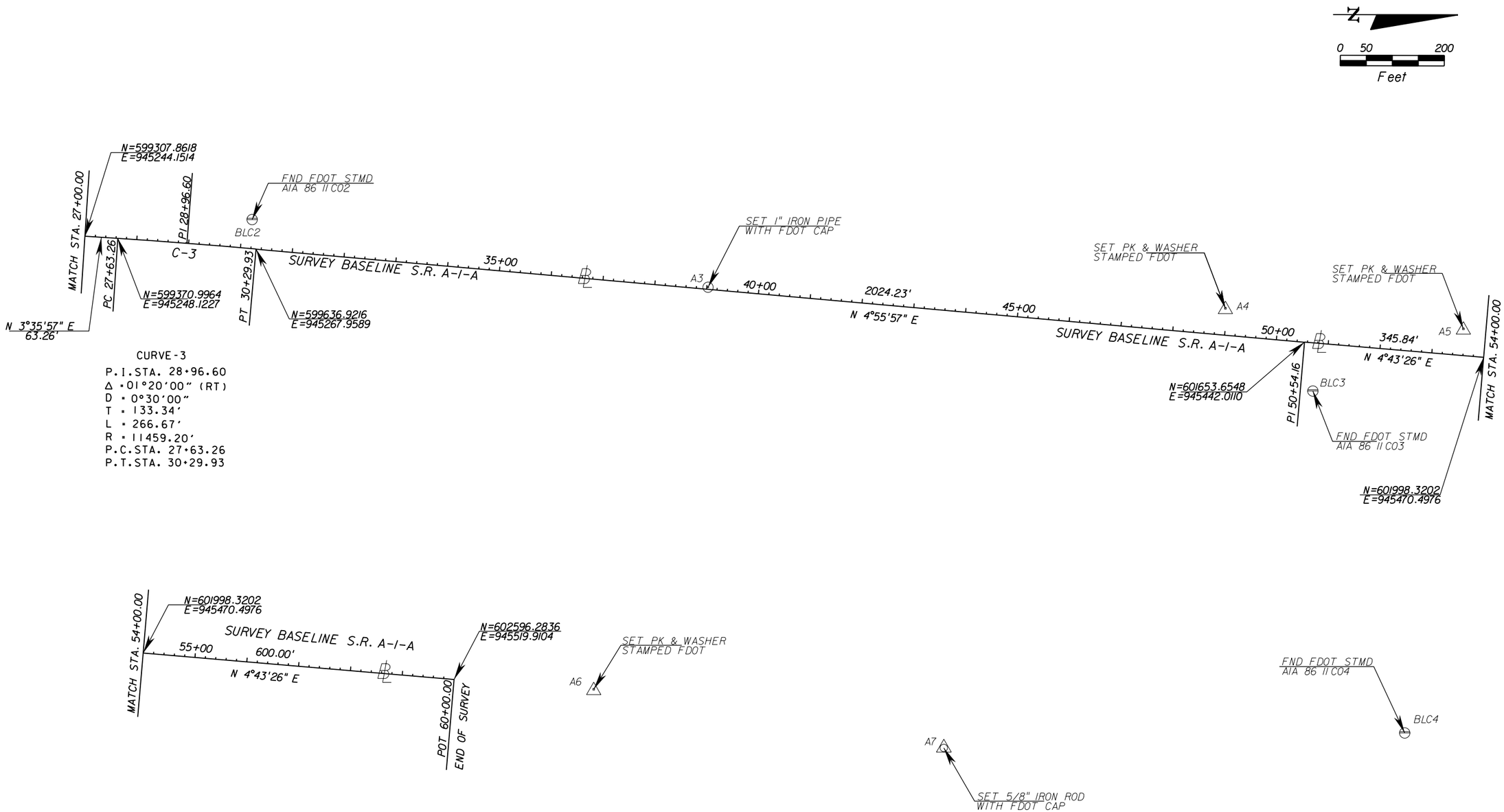

REVISIONS			
DATE	DESCRIPTION	DATE	DESCRIPTION

FRANK PARUAS, PROJECT SURVEYOR
SURVEYOR LICENSE NUMBER 6625
F.R. ALEMAN & ASSOCIATES, INC.
10305 N.W. 41 STREET, SUITE 200
MIAMI, FLORIDA 33178
CERTIFICATE OF AUTHORIZATION LB 6785

STATE OF FLORIDA
DEPARTMENT OF TRANSPORTATION

ROAD NO.	COUNTY	FINANCIAL PROJECT ID
A1A	BROWARD	428727-1-52-01

PROJECT NETWORK CONTROL

SHEET NO.
CTL-2

emslerra 12/2/2013 7:11:42 PM H:\e\Projects\4287271520\roadway\CTLSRD02.dgn

NOTICE: THE OFFICIAL RECORD OF THIS SHEET IS THE ELECTRONIC FILE SIGNED AND SEALED UNDER RULE 5J-17.062, F.A.C.

SPECIFIC PURPOSE SURVEY

BASELINE SURVEY S.R. AIA

	STATION	NORTHING	EASTING	MONUMENT DESCRIPTION
P.O.T.	7+00.00	597339.8275	945457.9576	NOT FOUND OR SET
P.O.T.	10+00.00	597638.3268	945427.9880	FOUND PK NAIL WITH 3"X3" SQUARE WASHER
P.C.	10+05.78	597644.0802	945427.4104	FOUND PK NAIL WITH 3"X3" SQUARE WASHER
P.I.	12+10.05	597847.3268	945407.0047	NOT FOUND OR SET
P.T.	14+12.77	598041.6620	945344.0807	NOT FOUND OR SET
P.C.	17+19.16	598333.1527	945249.6984	NOT FOUND OR SET
P.I.	19+00.90	598506.0505	945193.7155	NOT FOUND OR SET
P.T.	20+78.34	598687.4274	945205.1245	NOT FOUND OR SET
P.C.	27+63.26	599370.9964	945248.1227	NOT FOUND OR SET
P.I.	28+96.60	599504.0744	945256.4936	NOT FOUND OR SET
P.C.	27+63.26	599370.9964	945248.1227	NOT FOUND OR SET
P.I.	28+96.60	599504.0744	945256.4936	NOT FOUND OR SET
P.T.	30+29.93	599636.9216	945267.9589	NOT FOUND OR SET
P.I.	50+54.16	601653.6548	945442.0110	NOT FOUND OR SET
P.O.T.	60+00.00	602596.2836	945519.9104	NOT FOUND OR SET

PROJECT NETWORK CONTROL TABULATION SHEET DETAILS

POINT NAME	(X) EASTING	(Y) NORTHING	SCALE FACTOR	LATITUDE	LONGITUDE	BASELINE STATION	OFFSET	(Z) ELEVATION	DESCRIPTION
BLC1	945371.9446	597671.1505	1.00003708	25°46'21.191518"	80°07'10.887649"	10+39.17	52.20' LT	2.439'	FND FDOT BRASS DISK STAMPED AIA 86 II C01
AA1	945282.6712	598406.5258	1.00003702	25°58'38.218581"	80°07'11.811604"	17+82.29	52.00' RT	2.825'	SET 5/8" IRON ROD WITH FDOT CAP
AA2	945207.9605	598767.1542	1.00003698	25°58'41.795144"	80°07'12.603640"	21+58.09	2.17' LT	3.669'	SET 1" IRON PIPE WITH FDOT CAP
BLC2	945211.2986	599629.2830	1.00003698	25°58'50.333255"	80°07'12.503513"	30+17.51	55.80' LT	2.591'	FND FDOT BRASS DISK STAMPED AIA 86 II C02
AA3	945339.3506	600506.3170	1.00003706	25°58'59.010669"	80°07'11.035700"	39+02.25	3.63' LT	3.458'	SET 5/8" IRON ROD WITH FDOT CAP
AA4	945377.5218	601501.3799	1.00003709	25°59'8.863000"	80°07'10.544020"	48+96.91	51.16' LT	2.743'	SET PK & WASHER STAMPED FDOT
BLC3	945536.1568	601669.9843	1.00003719	25°59'10.522238"	80°07'8.793260"	50+78.19	92.48' RT	2.962'	FND FDOT BRASS DISK STAMPED AIA 86 II C03
AA5	945415.8953	601959.1280	1.00003711	25°59'13.393872"	80°07'10.089747"	53+56.45	51.18' LT	2.518'	SET PK & WASHER STAMPED FDOT
AA6	945538.2793	602864.8568	1.00003719	25°59'22.355833"	80°07'8.681784"			3.888'	SET PK & WASHER STAMPED FDOT
AA7	945649.2876	603538.4278	1.00003727	25°59'29.019311"	80°07'7.415566"			3.011'	SET 5/8" IRON ROD WITH FDOT CAP
BLC4	945618.3187	604424.7229	1.00003725	25°59'37.79903"	80°07'7.689468"			2.735'	FND FDOT BRASS DISK STAMPED AIA 86 II C04

REVISIONS

DATE	DESCRIPTION	DATE	DESCRIPTION

FRANK PARUAS, PROJECT SURVEYOR
LICENSE NUMBER 6625
F.R. ALEMAN & ASSOCIATES, INC.
10305 N.W. 41 STREET, SUITE 200
MIAMI, FLORIDA 33178
CERTIFICATE OF AUTHORIZATION LB 6785

STATE OF FLORIDA
DEPARTMENT OF TRANSPORTATION

ROAD NO.	COUNTY	FINANCIAL PROJECT ID
AIA	BROWARD	428727-1-52-01

PROJECT NETWORK CONTROL

SHEET NO.
CTL-3

NOTICE: THE OFFICIAL RECORD OF THIS SHEET IS THE ELECTRONIC FILE SIGNED AND SEALED UNDER RULE 5J-17.062, F.A.C.

STATE OF FLORIDA
DEPARTMENT OF TRANSPORTATION

CONTRACT PLANS

FINANCIAL PROJECT ID 428727-1-52-01
(FEDERAL FUNDS)
BROWARD COUNTY (86030)
STATE ROAD NO. A1A
SOUTH OCEAN DRIVE
FROM COUNTY LINE ROAD TO SEACREST PARKWAY

SIGNING AND PAVEMENT MARKING PLANS

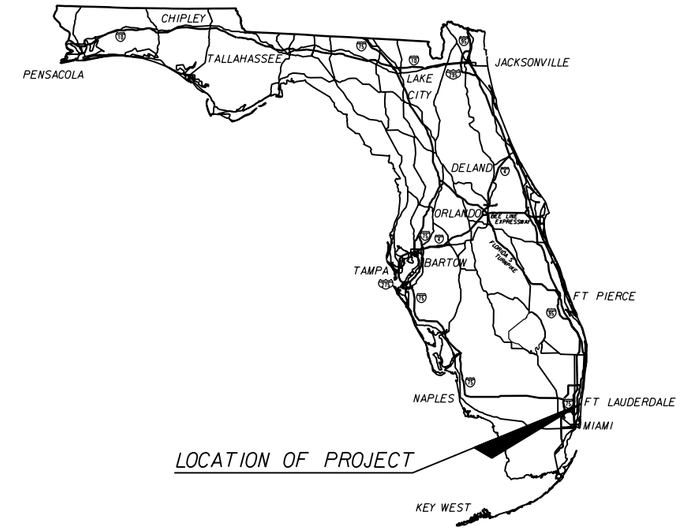

INDEX OF SIGNING AND PAVEMENT MARKING PLANS

SHEET NO.	SHEET DESCRIPTION
S-1	KEY SHEET
S-2	TABULATION OF QUANTITIES
S-3	GENERAL NOTES
S-4 TO S-12	SIGNING AND PAVEMENT MARKINGS
S-13	SIGNING AND PAVEMENT MARKINGS DETAILS
S-14	GUIDE SIGN WORK SHEET
S-15	UNDERGROUND TMS ENCLOSURE DETAILS
S-16	UNDERGROUND TMS BACKPLANE WIRING DETAILS

SIGNING AND PAVEMENT MARKING
SHOP DRAWINGS TO BE SUBMITTED TO:

MICHEL A. RODRIGUEZ, P.E.
AES ENGINEERING, INC.
13500 SW 88th STREET, SUITE 265
MIAMI, FLORIDA 33186
TEL. (786) 250-8809

PLANS PREPARED BY:

AES ENGINEERING, INC
13500 S.W. 88th STREET, SUITE 265
MIAMI, FLORIDA 33186
TEL. (786) 250-8809
CONTRACT No. : C-9495
VENDOR N0. F274343167-001
CA No. 29369
MICHEL A. RODRIGUEZ, P.E. No 63342

NOTE: THE SCALE OF THESE PLANS MAY HAVE CHANGED DUE TO REPRODUCTION.

KEY SHEET REVISIONS	
DATE	DESCRIPTION

SIGNING AND PAVEMENT MARKING PLANS
ENGINEER OF RECORD: MICHEL A. RODRIGUEZ, P.E.

P.E. NO.: 63342

FISCAL YEAR	SHEET NO.
14	S-1

FDOT PROJECT MANAGER: FAUSTO GOMEZ, P.E.

NOTICE: THE OFFICIAL RECORD OF THIS SHEET IS THE ELECTRONIC FILE SIGNED AND SEALED UNDER RULE 61G15-23.003, F.A.C.

TABULATION OF QUANTITIES

PAY ITEM NO.	DESCRIPTION	UNIT	SHEET NUMBERS S-4 PLAN	S-4 FINAL	S-5 PLAN	S-5 FINAL	S-6 PLAN	S-6 FINAL	S-7 PLAN	S-7 FINAL	S-8 PLAN	S-8 FINAL	S-9 PLAN	S-9 FINAL	S-10 PLAN	S-10 FINAL	S-11 PLAN	S-11 FINAL	S-12 PLAN	S-12 FINAL	TOTAL THIS SHEET PLAN	TOTAL THIS SHEET FINAL	GRAND TOTAL PLAN	GRAND TOTAL FINAL	REF. SHEET
630-2-12	CONDUIT, FURNISH AND INSTALL, DIRECTIONAL BORE	LF	-		111		-		-		-		91		-		-		72		274		274		
635-2-11	PULL & SPLICES BOX, F&I, 13" X 24" COVER SIZE	EA	-		3		-		-		-		3		-		-		3		9		9		
635-2-13	PULL & SPLICE BOX, F&I, 30" X 60" RECTANGULAR OR 36" COVER SIZE	EA	-		1		-		-		-		1		-		-		1		3		3		
690-50	CONTROLLER ASSEMBLY, REMOVE, COMPLETE ASSEMBLY	EA	-		-		-		-		-		1		-		-		-		1		1		
700-1-11	SINGLE POST SIGN, F&I, LESS THAN 12 SF	AS	5		7		2		2		1		8		5		14		8		52		52		
700-1-12	SINGLE POST SIGN, F&I, 12 - 20 SF	AS	1		-		-		-		-		-		-		1		1		3		3		
700-1-13	SINGLE POST SIGN, F&I, 21 - 30 SF	AS	-		-		-		-		-		-		1		-		-		1		1		
700-1-21	SINGLE POST SIGN, F&I, BARRIER MOUNTED, LESS THAN 12 SF	AS	-		-		-		-		-		-		-		1				1		1		
700-1-60	SINGLE POST SIGN, REMOVE	AS	8		4		-		2		-		6		5		8		4		37		37		
705-11-3	DELINEATOR, FLEXIBLE HIGH VISIBILITY, MEDIAN	EA	-		-		-		-		-		-		12		6		-		18		18		
710-90	PAINTED PAVEMENT MARKING, FINAL SURFACE	LS																			1		1		
*	RETRO-REFLECTIVE PAVT. MARKER (WHITE/RED)	EA	56		74		76		78		68		86		82		122		81		723		723		
*	RETRO-REFLECTIVE PAVT. MARKER (YELLOW/YELLOW)	EA	8		57		-		16		8		8		15		63		18		193		193		
*	RETRO-REFLECTIVE PAVT. MARKER (BLUE/BLUE)	EA	2		6		6		5		3		3		1		1		3		30		30		
*	RETRO-REFLECTIVE PAVT. MARKER (WHITE)	EA	-		-		-		-		-		-		12		18		-		30		30		
*	PAINTED PAVEMENT MARKINGS, STANDARD, WHITE, ISLAND NOSE	SF	-		-		-		-		-		-		5.40		4.80		-		10.20		10.20		
*	PAINTED PAVEMENT MARKINGS, STANDARD, YELLOW, ISLAND NOSE	SF	2.30		53.70		-		5.50		2.40		2.30		-		24.00		7.80		98		98		
*	PAINTED PAVEMENT MARKINGS, STANDARD, WHITE, SOLID, 12"	LF	275		164		-		164		-		164		288		444		39		1538		1538		
*	PAINTED PAVEMENT MARKINGS, STANDARD, WHITE, SOLID, 18"	LF	-		-		-		-		-		-		-		25		-		25		25		
*	PAINTED PAVEMENT MARKINGS, STANDARD, WHITE, SOLID, 24"	LF	68		83		-		83		42		96		48		159		58		637		637		
*	PAINTED PAVEMENT MARKINGS, STANDARD, WHITE, 6-10 GAP EXTENSION, 6"	LF	35		48		108		48		140		48		30		36		59		552		552		
*	PAINTED PAVEMENT MARKINGS, STANDARD, WHITE, 2-4 GUIDELINE, 6"	LF	-		-		-		-		-		36		12		116		-		164		164		
*	PAINTED PAVEMENT MARKINGS, STANDARD, WHITE, MESSAGE	EA	3		-		-		-		-		6		-		2		1		12		12		
*	PAINTED PAVEMENT MARKINGS, STANDARD, WHITE, DIRECTIONAL ARROWS (LEFT TURN)	EA	3		-		3		5		1		2		-		6		4		24		24		
*	PAINTED PAVEMENT MARKINGS, STANDARD, WHITE, DIRECTIONAL ARROWS (RIGHT TURN)	EA	3		-		-		-		2		1		1		4		1		12		12		
*	PAINTED PAVEMENT MARKINGS, STANDARD, WHITE, DIRECTIONAL ARROWS (U-TURN)	EA	-		2		-		-		-		-		2		1		-		5		5		
*	PAINTED PAVEMENT MARKINGS, STANDARD, YELLOW, SOLID, 18"	LF	-		-		-		-		-		-		72		52		-		124		124		
*	PAINTED PAVEMENT MARKINGS, STANDARD, WHITE, SOLID, 6"	NM	0.200		0.263		0.317		0.447		0.280		0.323		0.264		0.391		0.339		2.824		2.824		
*	PAINTED PAVEMENT MARKINGS, STANDARD, WHITE, SOLID, 8"	LF	217		312		80		-		159		307		513		819		333		2704		2704		
*	PAINTED PAVEMENT MARKINGS, STANDARD, WHITE, 6", 10'-30' SKIP	GM	0.121		0.250		0.333		0.242		0.280		0.242		0.258		0.181		0.167		2.074		2.074		
*	PAINTED PAVEMENT MARKINGS, STANDARD, WHITE, 12" WIDE, 3'-9' SKIP	GM	0.023		0.043		-		-		-		0.066		-		-		-		0.132		0.132		
*	PAINTED PAVEMENT MARKINGS, STANDARD, YELLOW, SOLID, 6"	NM	0.107		0.185		0.212		0.174		0.173		0.209		0.158		0.161		0.180		1.559		1.559		
*	PAINTED PAVEMENT MARKINGS, STANDARD, YELLOW, SOLID, 8"	LF	-		-		-		-		-		-		296		164		-		460		460		
711-14-123	THERMOPLASTIC, PREFORMED, WHITE, SOLID, 12"	LF	-		-		-		-		-		-		-		-		163		163		163		
711-14-125	THERMOPLASTIC, PREFORMED, WHITE, SOLID, 24"	LF	-		-		-		-		-		-		-		-		120		120		120		
711-14-160	THERMOPLASTIC PREFORMED WHITE MESSAGE	EA	3		5		6		5		4		7		2		5		1		38		38		
711-14-170	THERMOPLASTIC PREFORMED WHITE ARROW	EA	-		-		-		-		-		2		2		5		-		9		9		
741-1-11	TMS SENSOR-NON-WEIGHT, FURNISH & INSTALL, TYPE 1 AXLE SENSOR-IN ROAD	EA	-		6		-		-		-		6		-		-		6		18		18		
745-70-12	TMS INDUCTIVE LOOP ASSEM, F&I, 2 LOOPS / LANES	AS	-		6		-		-		-		6		-		-		6		18		18		

* THESE QUANTITIES ARE PAID FOR UNDER PAINTED PAVEMENT MARKINGS (FINAL SURFACE), LUMP SUM - ITEM 710-90. THE QUANTITIES SHOWN ARE FOR ONE APPLICATION; SEE SPECIFICATION 710 FOR THE NUMBER OF APPLICATIONS REQUIRED.

REVISIONS			
DATE	DESCRIPTION	DATE	DESCRIPTION

ENGINEER OF RECORD:
AES ENGINEERING, INC
13500 S.W. 88th STREET, SUITE 265
MIAMI, FLORIDA 33186
TEL. (786) 250-8809
CA No. 29369
MICHEL A. RODRIGUEZ, P.E. 63342

STATE OF FLORIDA
DEPARTMENT OF TRANSPORTATION

ROAD NO.	COUNTY	FINANCIAL PROJECT ID
A1A	BROWARD	428727-1-52-01

TABULATION OF QUANTITIES

SHEET NO. S-2

NOTICE: THE OFFICIAL RECORD OF THIS SHEET IS THE ELECTRONIC FILE SIGNED AND SEALED UNDER RULE 61G15-23.003, F.A.C.

SIGNING AND PAVEMENT MARKINGS GENERAL NOTES

1. SIGNING AND PAVEMENT MARKING TO BE DONE IN ACCORDANCE WITH THE MANUAL OF UNIFORM TRAFFIC CONTROL DEVICES, AND F.D.O.T. DESIGN STANDARDS.

2. REFER TO F.D.O.T. DESIGN STANDARDS INDEX. No. 17352 FOR RETRO-REFLECTIVE PAVEMENT MARKER PLACEMENT DETAILS, AND SIGNING AND PAVEMENT MARKINGS DETAILS SHEET.

3. THE SIGN LOCATIONS SHOWN ARE APPROXIMATE AND ANY REQUIRE FIELD ADJUSTMENT AS DIRECTED BY THE ENGINEER.

4. ALL FLORIDA ROUTE MARKERS MUST CONFORM TO F.D.O.T. DESIGN STANDARDS INDEX No. 17355.

5. ALL ROUTE MARKER AUXILIARIES SHALL MATCH THE COLOR COMBINATION OF THE RESPECTIVE MARKER WHICH THEY SUPPLEMENT.

6. ANY EXISTING SIGN TO REMAIN THAT IS DISTURBED DURING CONSTRUCTION OR RELOCATED SHALL BE RESET TO CURRENT STANDARDS FOR HEIGHT, OFFSET, AND METHOD OF INSTALLATION. COST OF THIS WORK SHALL BE REFLECTED IN THE PAY ITEM No. 102-1 IN THE SUMMARY OF ROADWAY PAY ITEMS. IF SIGNS ARE DAMAGED BY THE CONTRACTOR, THE SIGNS SHALL BE REPLACED AT THE CONTRACTOR'S EXPENSE.

7. ANY EXISTING SINGLE-POST, MULTI-POST AND OVERHEAD SIGNS WITHIN THE PROJECT LIMITS SHALL REMAIN UNLESS OTHERWISE NOTED IN THE PLANS.

8. THE CONTRACTOR SHALL CALL THE SUNSHINE ONE CALL OF FLORIDA, INC. AT 811 AND UTILITY OWNERS 48 HOURS BEFORE BEGINNING WORK. ALL UTILITY OWNERS MAY NOT BE A MEMBER, REQUIRING DIRECT CONTACT.

9. THE CONTRACTOR IS HEREBY NOTIFIED THAT ABOVE GROUND OR UNDERGROUND UTILITIES MAY BE IN THE AREA OF THIS PROJECT AND ARE TO BE ADJUSTED BY OTHERS.

10. ALL EXISTING PAVEMENT MARKINGS OUTSIDE THE LIMITS OF CONSTRUCTION THAT ARE ALTERED SHALL BE REPLACED UPON COMPLETION OF THE PROJECT AT NO ADDITIONAL COST.

11. ALL SIGNS AND SUPPORTS SHOWN IN THE PLANS FOR REMOVAL SHALL BE COMPLETELY REMOVED AND BECOME THE PROPERTY OF THE CONTRACTOR TO BE DISPOSED PROPERLY UNLESS OTHERWISE NOTED IN THE PLANS.

12. MATCH EXISTING PAVEMENT MARKINGS AT THE AND THE END OF THE PROJECT AND AT ALL SIDE STREETS WITHOUT JOGS AND OFFSETS.

13. INCORRECTLY PLACED THERMOPLASTIC MARKINGS OVER FRICTION COURSE WILL BE REMOVED BY MILLING AND REPLACING THE FRICTION COURSE TO A MINIMUM WIDTH OF 18" AT THE CONTRACTOR'S EXPENSE. THE ENGINEER MAY APPROVE AN ALTERNATIVE METHOD IF IT CAN BE DEMONSTRATED TO COMPLETELY REMOVE THE MARKINGS WITHOUT DAMAGING THE ASPHALT.

14. THE CONTRACTOR SHALL SUBMIT A LIST OF EXISTING SIGNS TO THE PROJECT ENGINEER AT THE PRE-CONSTRUCTION CONFERENCE. ANY LOST OR DAMAGED DURING CONSTRUCTION SIGNS SHALL BE REPLACED AT NO ADDITIONAL COST. COST OF MAINTAINING OF EXISTING SIGNS TO BE INCLUDED IN ITEM 102-1, MAINTENANCE OF TRAFFIC.

15. CALL THE PLANNING DEPARTMENT (5) FIVE DAYS PRIOR TO CUTTING THE INDUCTIVE LOOPS INTO THE FRICTION COURSE, IN ORDER TO PERFORM A FINAL INSPECTION PRIOR TO FINAL ACCEPTANCE. CONTACT KARA SCHAWRTZ AT (954) 777-4364 OR E-MAIL AT Kara.Schawrtz@dot.state.fl.us

16. CONTRACTOR SHALL INSTALL BLUE RAISED PAVEMENT MARKER TO IDENTIFY FIRE HYDRANTS. FOR INSTALLATION GUIDELINES REFER TO TRAFFIC ENGINEERING MANUAL (T.E.M.) SECTION 4.3. REFER TO TABLE ABOVE FOR FIRE HYDRANT LOCATION.

	* FIRE HYDRANT				
NO.	STATION	F.H. LOCATION	NO.	STATION	F.H. LOCATION
1	11+16	RT	16	25+96	LT
2	12+32	LT	17	27+60	RT
3	13+62	LT	18	29+42	LT
4	14+03	RT	19	30+02	RT
5	13+98	MEDIAN	20	32+66	RT
6	15+71	MEDIAN	21	33+96	LT
7	16+40	LT	22	35+44	RT
8	18+42	LT	23	37+04	LT
9	20+02	RT	24	38+40	RT
10	20+44	LT	25	41+42	RT
11	21+08	LT	26	45+22	RT
12	21+64	MEDIAN	27	50+20	LT
13	22+68	RT	28	53+10	RT
14	23+40	LT	29	54+03	LT
15	25+03	RT	30	56+40	RT

* FIRE HYDRANT LOCATIONS NEED TO BE FIELD VERIFIED BY THE CONTRACTOR BEFORE THE PLACEMENT OF BLUE RPM'S.

17. TMS LOCATONS:

SITE 86-0421:
SR AIA - NORTH OF BROWARD/DADE COUNTY LINE
INSTALL INDUCTIVE LOOP ASSEMBLIES AND PIEZOELECTRIC AXLE SENSORS AT APPROXIMATE STATION 15+00 FOR THE NORTHBOUND DIRECTION AND STATION 15+50 FOR THE SOUTHBOUND DIRECTION. INSTALL SPECIAL PULL BOX (635-2-13) 'UNDERGROUND PTMS/VAULT' AT APPROXIMATE STATION 15+08 FOR BOTH DIRECTIONS. PLACEMENT WILL BE ON THE EAST SIDE OF THE ROADWAY, IN THE SIDEWALK OR AT RIGHT OF WAY LINE.

SITE 86-5044:
SR AIA - SOUTH OF SR 858/HALLANDALE BEACH BOULEVARD
INSTALL INDUCTIVE LOOP ASSEMBLIES AND PIEZOELECTRIC AXLE SENSORS AT APPROXIMATE STATION 38+25 FOR BOTH NORTH AND SOUTH BOUND DIRECTIONS. INSTALL SPECIAL PULL BOX (635-2-13) 'UNDERGROUND PTMS/VAULT' AT APPROXIMATE STATION 38+25 FOR BOTH DIRECTIONS. PLACEMENT WILL BE ON THE EAST SIDE OF THE ROADWAY, IN THE SIDEWALK OR AT RIGHT OF WAY LINE.

SITE 86-0418:
SR AIA - NORTH OF SR 858/HALLANDALE BEACH BOULEVARD
INSTALL INDUCTIVE LOOP ASSEMBLIES AND PIEZOELECTRIC AXLE SENSORS AT APPROXIMATE STATION 56+40 FOR BOTH NORTH AND SOUTH BOUND DIRECTIONS. INSTALL SPECIAL PULL BOX (635-2-13) 'UNDERGROUND PTMS/VAULT' AT APPROXIMATE STATION 56+40 FOR BOTH DIRECTIONS. PLACEMENT WILL BE ON THE EAST SIDE OF THE ROADWAY, IN THE SIDEWALK OR AT RIGHT OF WAY LINE.

18. CONTRACTOR SHALL PROVIDE A FDOT APPROVED PULL BOX OF NON-METALLIC CONSTRUCTION WITH RECESSED COVER LOGO " TRAFFIC SIGNALS ".

19. PAY ITEM No. 635-2-13 INCLUDES PTMS UNDERGROUND ENCLOSURE, BACKPLATE, WIRING, AND ALL OTHER LABOR AND EQUIPMENT NECESSARY FOR A COMPLETE AND ACCEPTABLE INSTALLATION PER THE PLANS.

20. CONTRACTOR SHALL USE CAUTION WHEN DIGGING FOR THE INSTALLATION OF THE PTMS ENCLOSURE AS UNDERGROUND UTILITIES MAY BE PRESENT.

21. THE CONTRACTOR SHALL FURNISH AND INSTALL LOOP ASSEMBLIES PER DESIGN STANDARS 17721 AND 17900.

NOTICE: THE OFFICIAL RECORD OF THIS SHEET IS THE ELECTRONIC FILE SIGNED AND SEALED UNDER RULE 61G15-23.003, F.A.C.

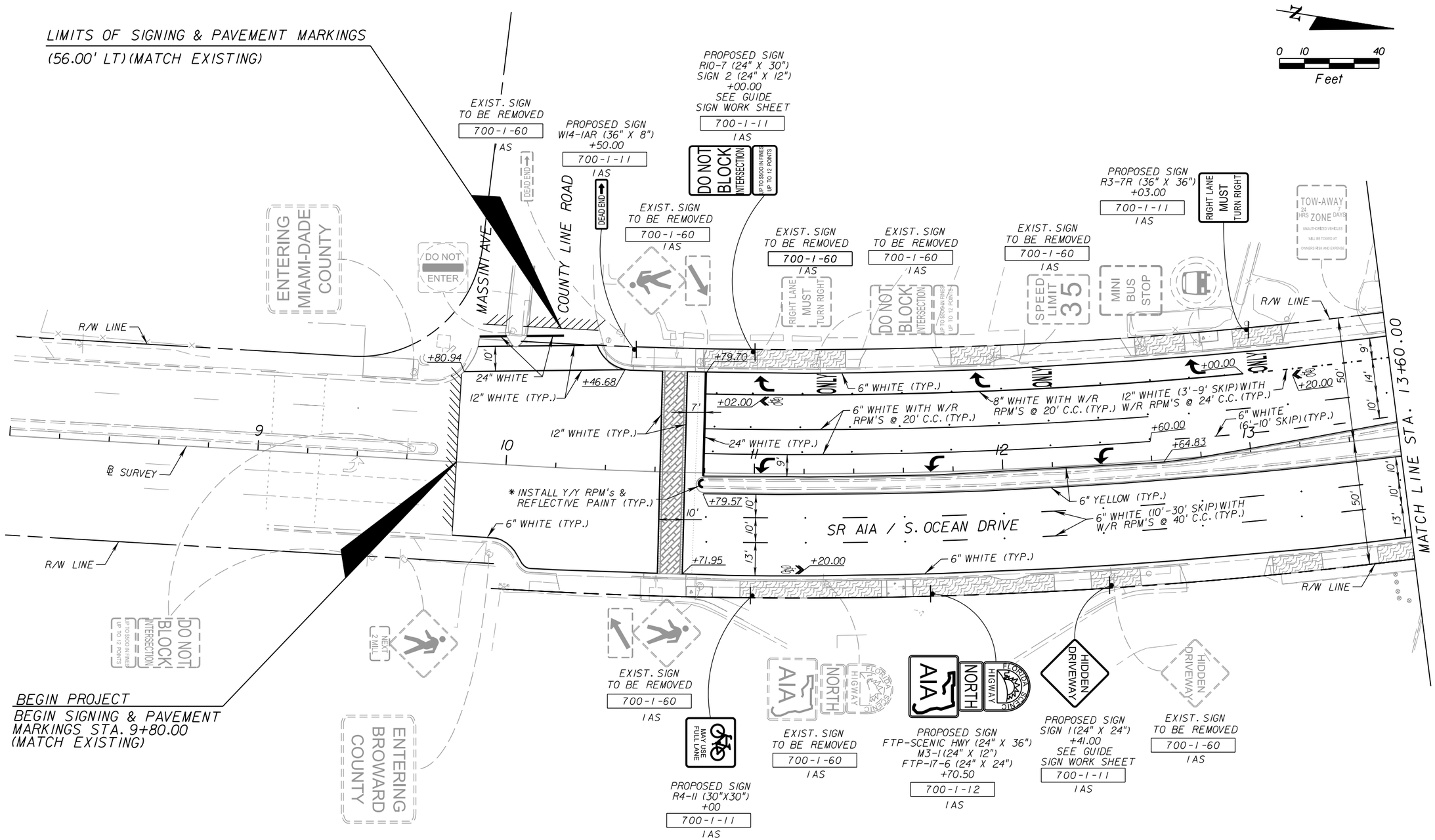

* NOTES:

FOR ADDITIONAL INFORMATION REFER TO SIGNING AND PAVEMENT MARKINGS DETAILS SHEET S-13.

REVISIONS			
DATE	DESCRIPTION	DATE	DESCRIPTION

ENGINEER OF RECORD:
AES ENGINEERING, INC
13500 S.W. 88th STREET, SUITE 265
MIAMI, FLORIDA 33186
TEL. (786) 250-8809
CA No. 29369
MICHEL A. RODRIGUEZ, P.E. 63342

STATE OF FLORIDA
DEPARTMENT OF TRANSPORTATION

ROAD NO.	COUNTY	FINANCIAL PROJECT ID
A1A	BROWARD	428727-1-52-01

SIGNING AND PAVEMENT MARKINGS

SHEET NO. S-4

emslerra 12/5/2013 11:16:07 AM H:\e\Projects\4287271520l\signing\plansp04.dgn

NOTICE: THE OFFICIAL RECORD OF THIS SHEET IS THE ELECTRONIC FILE SIGNED AND SEALED UNDER RULE 61G15-23.003, F.A.C.

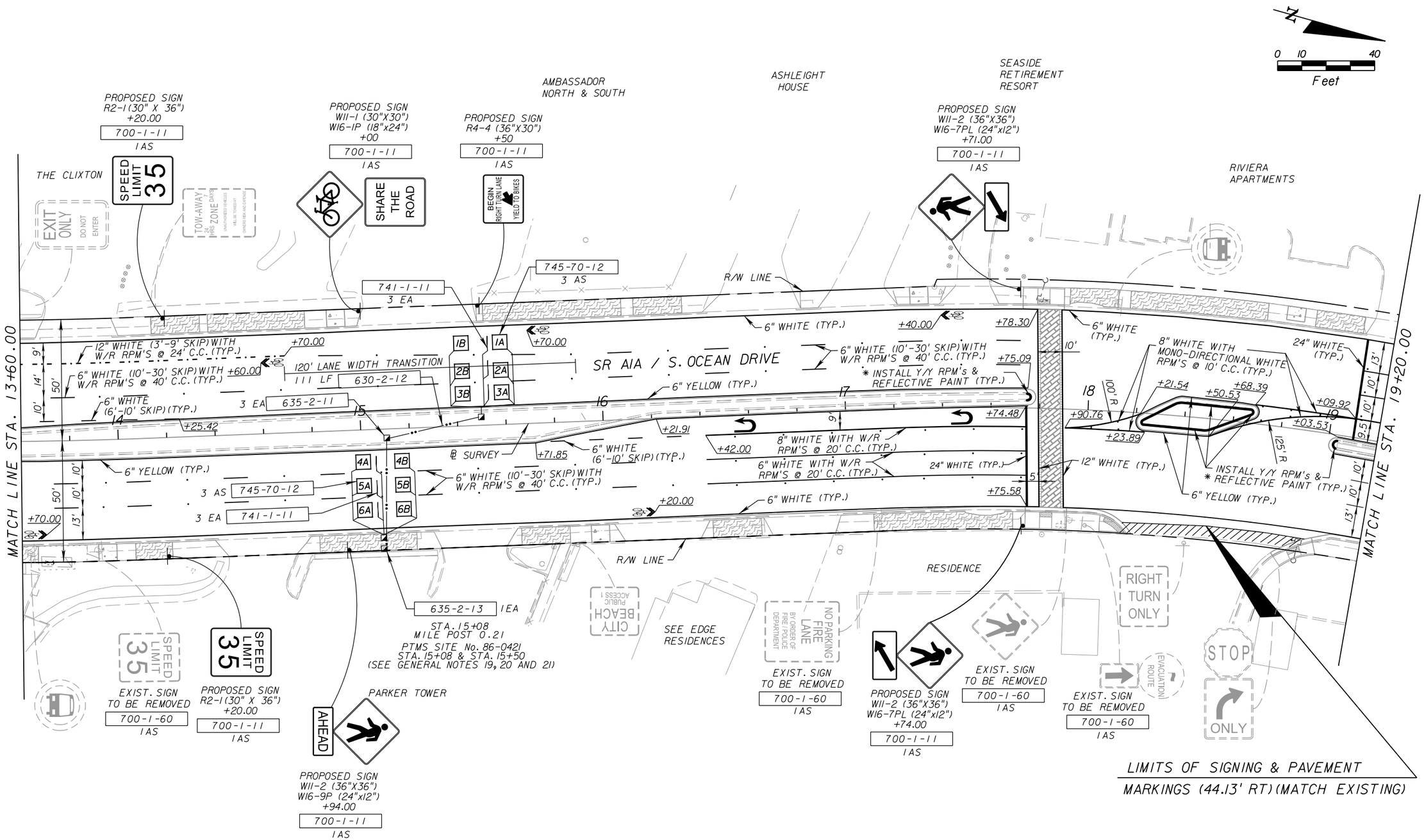

* NOTE:

FOR ADDITIONAL INFORMATION REFER TO SIGNING AND PAVEMENT MARKINGS DETAILS SHEET S-13.

REVISIONS			
DATE	DESCRIPTION	DATE	DESCRIPTION

ENGINEER OF RECORD:
AES ENGINEERING, INC
13500 S.W. 88th STREET, SUITE 265
MIAMI, FLORIDA 33186
TEL. (786) 250-8809
CA No. 29369
MICHEL A. RODRIGUEZ, P.E. 63342

STATE OF FLORIDA
DEPARTMENT OF TRANSPORTATION

ROAD NO.	COUNTY	FINANCIAL PROJECT ID
AIA	BROWARD	428727-1-52-01

SIGNING AND PAVEMENT MARKINGS

SHEET NO. S-5

NOTICE: THE OFFICIAL RECORD OF THIS SHEET IS THE ELECTRONIC FILE SIGNED AND SEALED UNDER RULE 61G15-23.003, F.A.C.

emslerra 12/5/2013 11:16:08 AM H:\e\Projects\4287271520\1\signing\plansp05.dgn

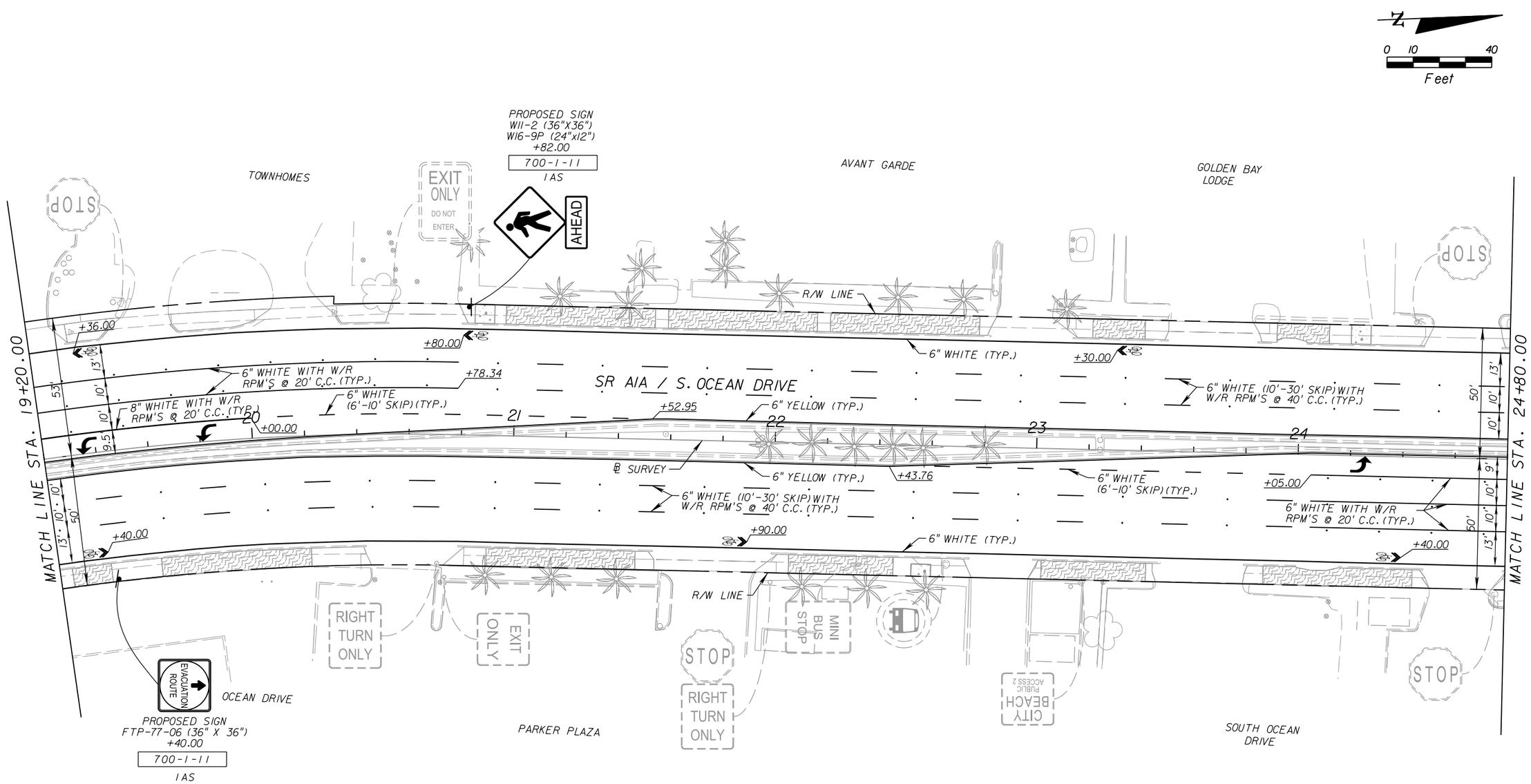

REVISIONS			
DATE	DESCRIPTION	DATE	DESCRIPTION

ENGINEER OF RECORD:
AES ENGINEERING, INC
13500 S.W. 88th STREET, SUITE 265
MIAMI, FLORIDA 33186
TEL. (786) 250-8809
CA No. 29369
MICHEL A. RODRIGUEZ, P.E. 63342

STATE OF FLORIDA
DEPARTMENT OF TRANSPORTATION

ROAD NO.	COUNTY	FINANCIAL PROJECT ID
A1A	BROWARD	428727-1-52-01

SIGNING AND PAVEMENT MARKINGS

SHEET NO.
S-6

emslerra 12/5/2013 11:16:10 AM H:\e\Projects\4287271520I\signing\plansp06.dgn

NOTICE: THE OFFICIAL RECORD OF THIS SHEET IS THE ELECTRONIC FILE SIGNED AND SEALED UNDER RULE 61G15-23.003, F.A.C.

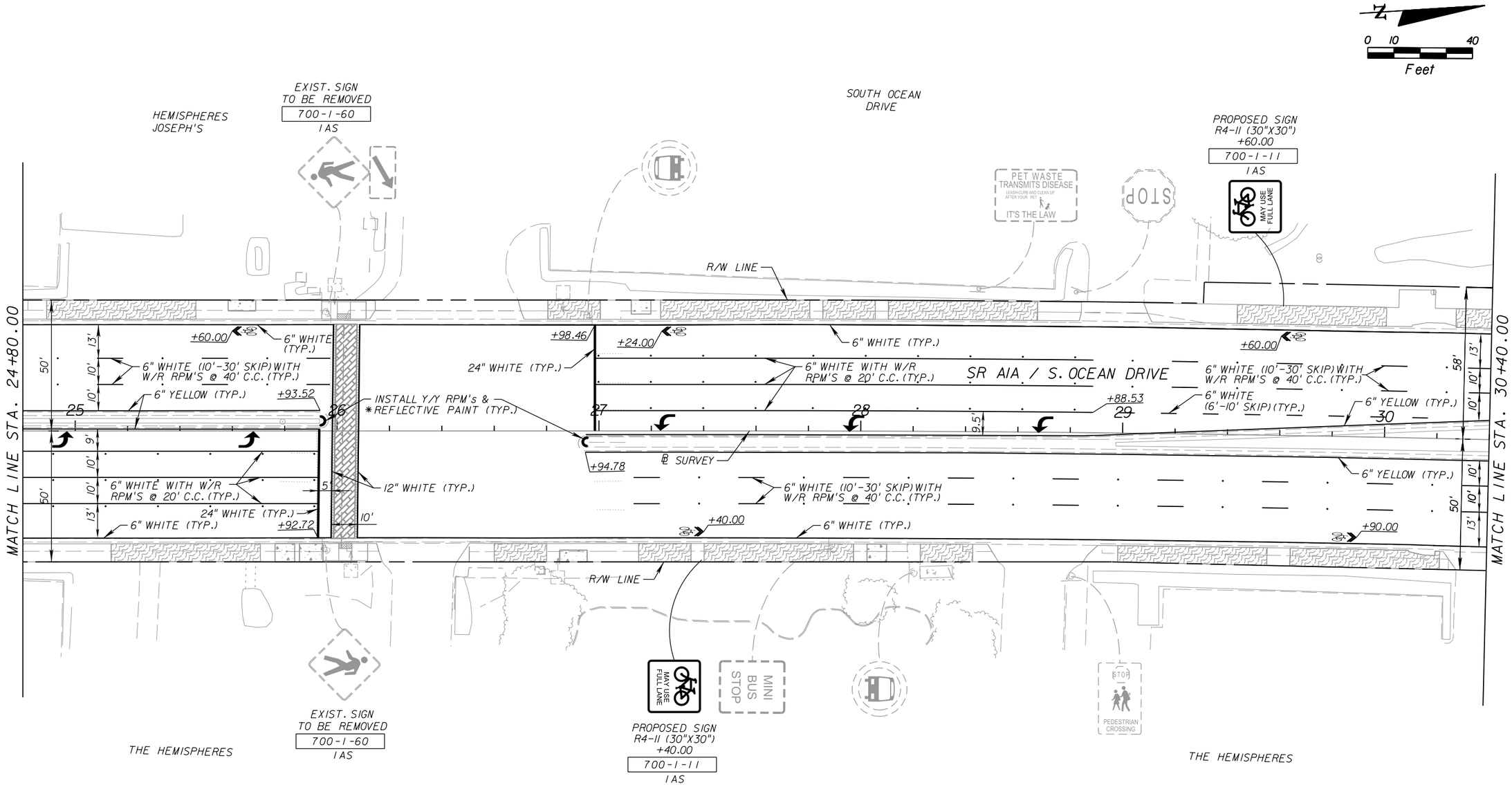

* NOTE:

FOR ADDITIONAL INFORMATION REFER TO
SIGNING AND PAVEMENT MARKINGS DETAILS SHEET S-13.

REVISIONS			
DATE	DESCRIPTION	DATE	DESCRIPTION

ENGINEER OF RECORD:
AES ENGINEERING, INC
13500 S.W. 88th STREET, SUITE 265
MIAMI, FLORIDA 33186
TEL. (786) 250-8809
CA No. 29369
MICHEL A. RODRIGUEZ, P.E. 63342

STATE OF FLORIDA
DEPARTMENT OF TRANSPORTATION

ROAD NO.	COUNTY	FINANCIAL PROJECT ID
AIA	BROWARD	428727-1-52-01

SIGNING AND PAVEMENT MARKINGS

SHEET NO.
S-7

emslerra 12/5/2013 11:16:11 AM H:\e\Projects\428727\5201\signing\plansp07.dgn

NOTICE: THE OFFICIAL RECORD OF THIS SHEET IS THE ELECTRONIC FILE SIGNED AND SEALED UNDER RULE 61G15-23.003, F.A.C.

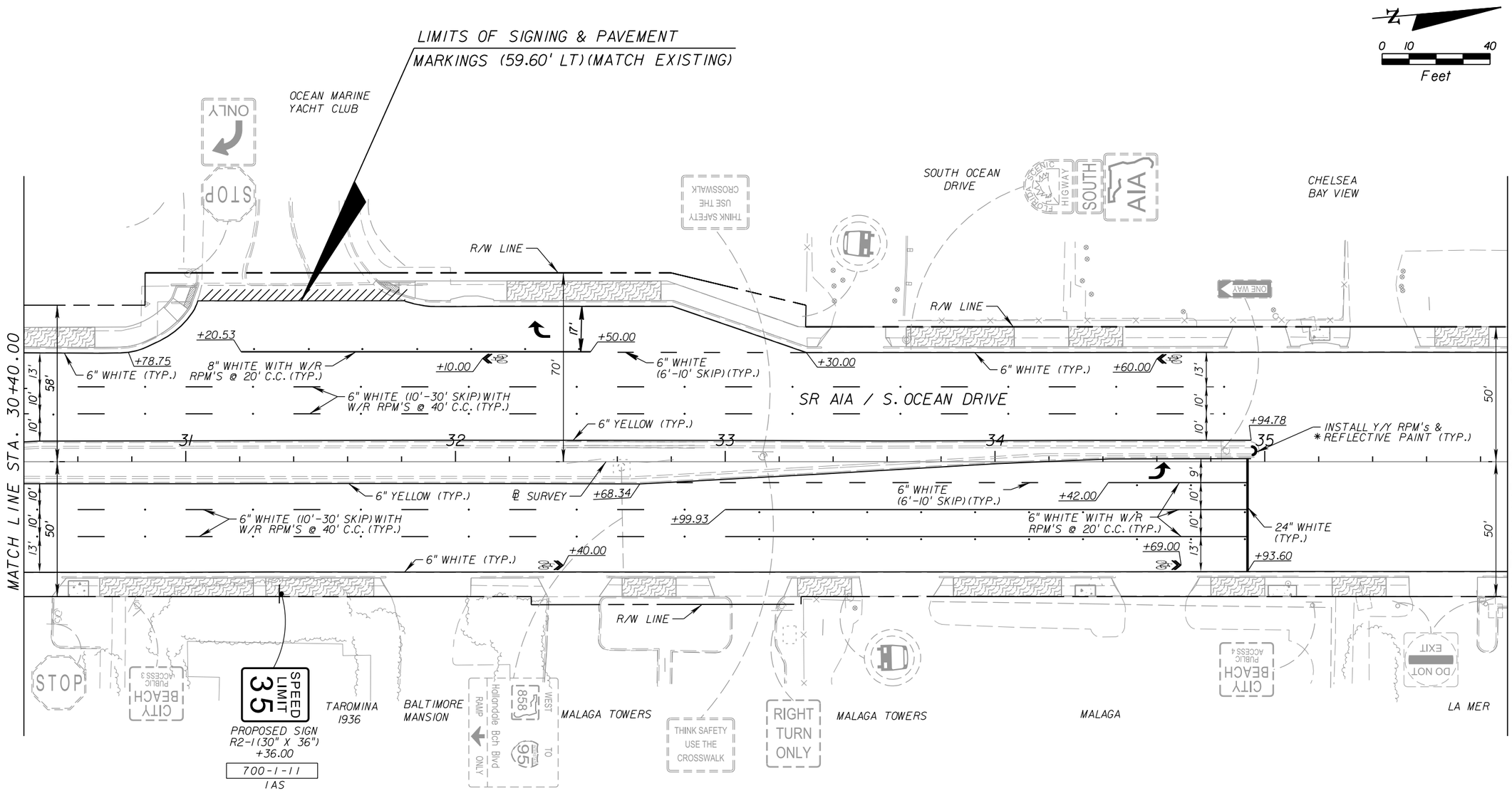

* NOTE:

FOR ADDITIONAL INFORMATION REFER TO
SIGNING AND PAVEMENT MARKINGS DETAILS SHEET S-13.

REVISIONS			
DATE	DESCRIPTION	DATE	DESCRIPTION

ENGINEER OF RECORD:
AES ENGINEERING, INC
13500 S.W. 88th STREET, SUITE 265
MIAMI, FLORIDA 33186
TEL. (786) 250-8809
CA No. 29369
MICHEL A. RODRIGUEZ, P.E. 63342

STATE OF FLORIDA
DEPARTMENT OF TRANSPORTATION

ROAD NO.	COUNTY	FINANCIAL PROJECT ID
AIA	BROWARD	428727-1-52-01

SIGNING AND PAVEMENT MARKINGS

SHEET NO.
S-8

NOTICE: THE OFFICIAL RECORD OF THIS SHEET IS THE ELECTRONIC FILE SIGNED AND SEALED UNDER RULE 61G15-23.003, F.A.C.

emslerra 12/5/2013 11:16:12 AM H:\e\Projects\428727\5201\signing\plansp08.dgn

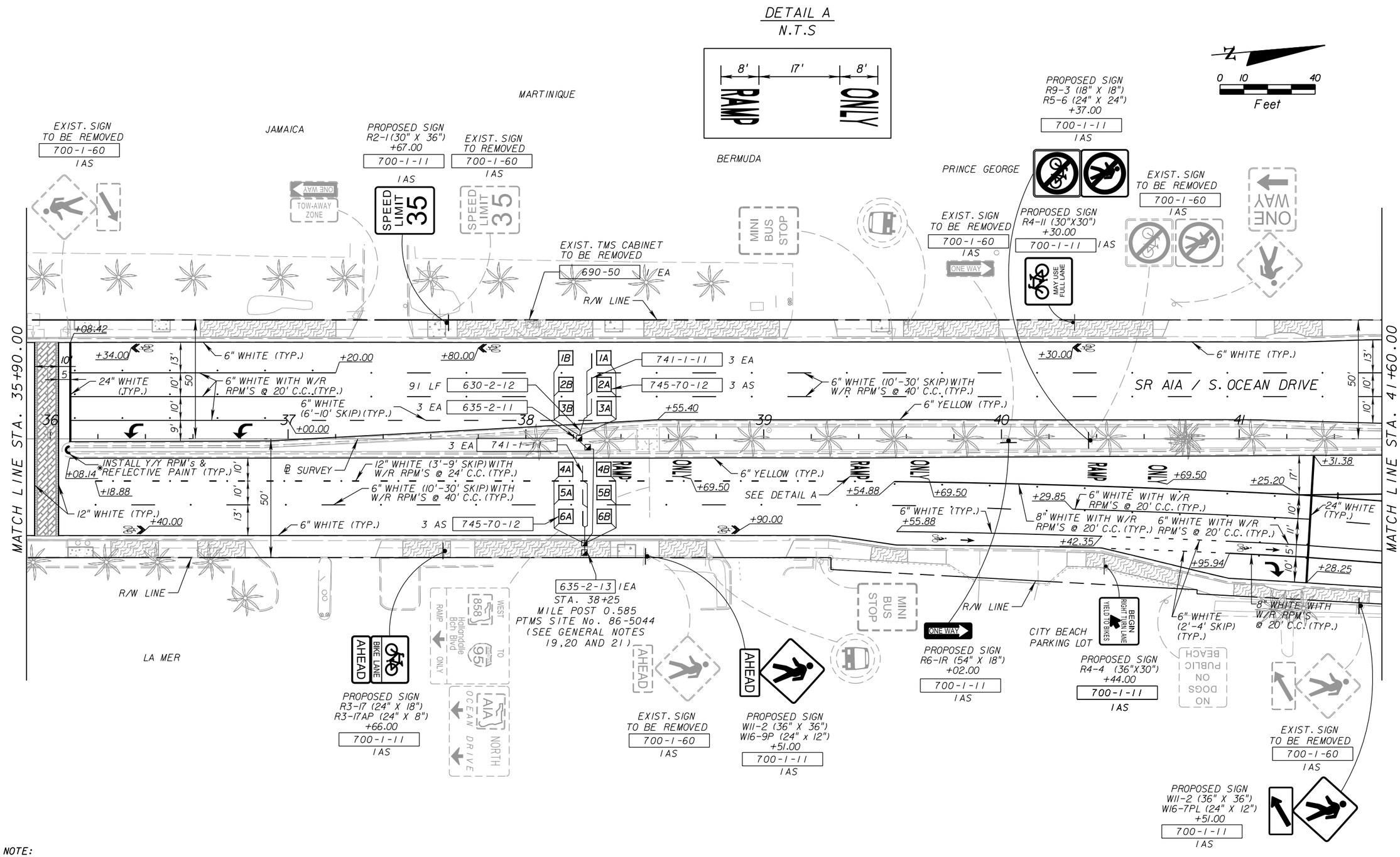

* NOTE:

FOR ADDITIONAL INFORMATION REFER TO SIGNING AND PAVEMENT MARKINGS DETAILS SHEET S-13.

REVISIONS			
DATE	DESCRIPTION	DATE	DESCRIPTION

ENGINEER OF RECORD:
AES ENGINEERING, INC
13500 S.W. 88th STREET, SUITE 265
MIAMI, FLORIDA 33186
TEL. (786) 250-8809
CA No. 29369
MICHEL A. RODRIGUEZ, P.E. 63342

STATE OF FLORIDA
DEPARTMENT OF TRANSPORTATION

ROAD NO.	COUNTY	FINANCIAL PROJECT ID
AIA	BROWARD	428727-1-52-01

SIGNING AND PAVEMENT MARKINGS

SHEET NO. S-9

NOTICE: THE OFFICIAL RECORD OF THIS SHEET IS THE ELECTRONIC FILE SIGNED AND SEALED UNDER RULE 61G15-23.003, F.A.C.

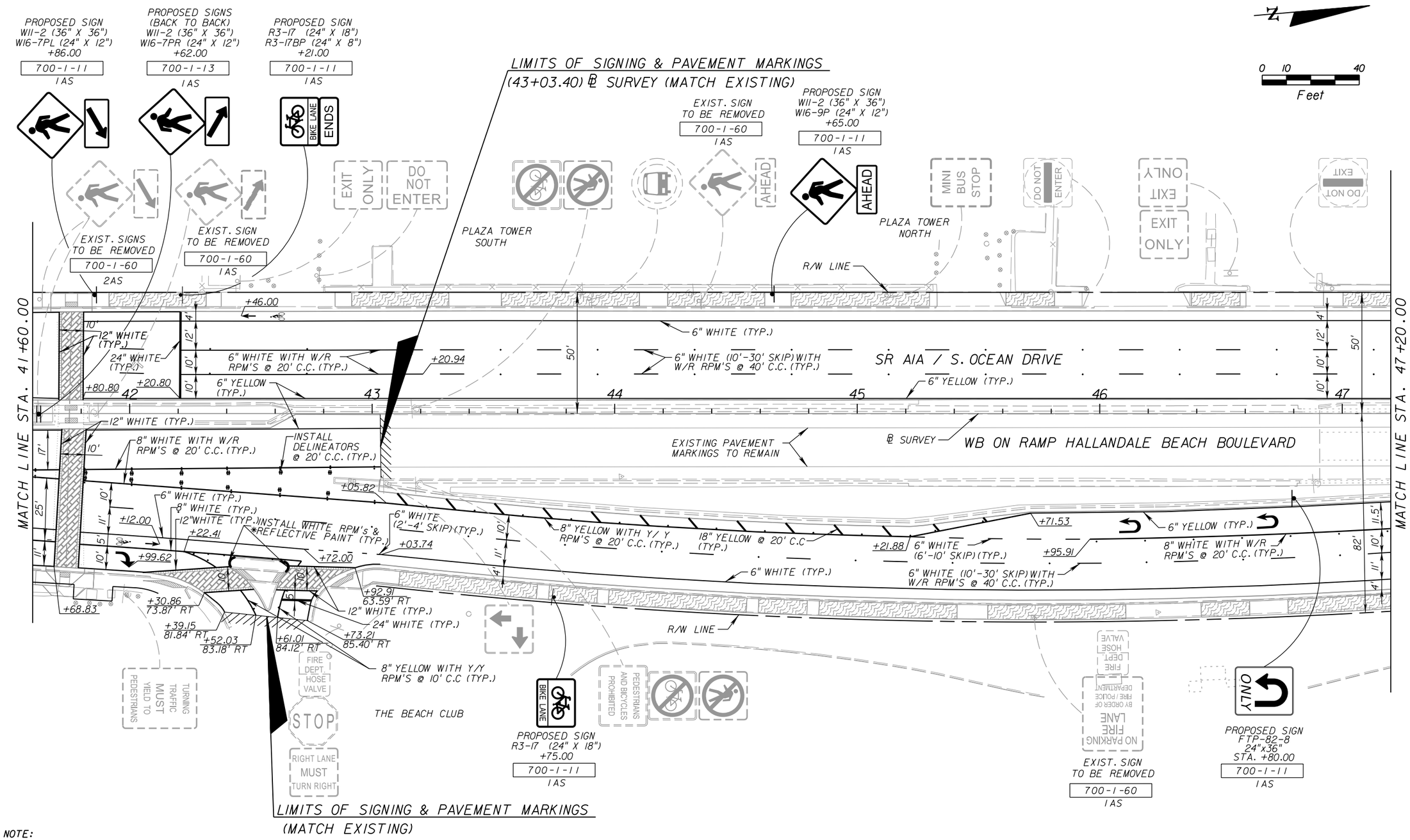

* NOTE:

FOR ADDITIONAL INFORMATION REFER TO SIGNING AND PAVEMENT MARKINGS DETAILS SHEET S-13.

REVISIONS			
DATE	DESCRIPTION	DATE	DESCRIPTION

ENGINEER OF RECORD:
AES ENGINEERING, INC
13500 S.W. 88th STREET, SUITE 265
MIAMI, FLORIDA 33186
TEL. (786) 250-8809
CA No. 29369
MICHEL A. RODRIGUEZ, P.E. 63342

STATE OF FLORIDA
DEPARTMENT OF TRANSPORTATION

ROAD NO.	COUNTY	FINANCIAL PROJECT ID
AIA	BROWARD	428727-1-52-01

SIGNING AND PAVEMENT MARKINGS

SHEET NO.
S-10

emslerra 12/5/2013 11:16:15 AM H:\e\Projects\428727152O1\signing\planspl0.dgn

NOTICE: THE OFFICIAL RECORD OF THIS SHEET IS THE ELECTRONIC FILE SIGNED AND SEALED UNDER RULE 61G15-23.003, F.A.C.

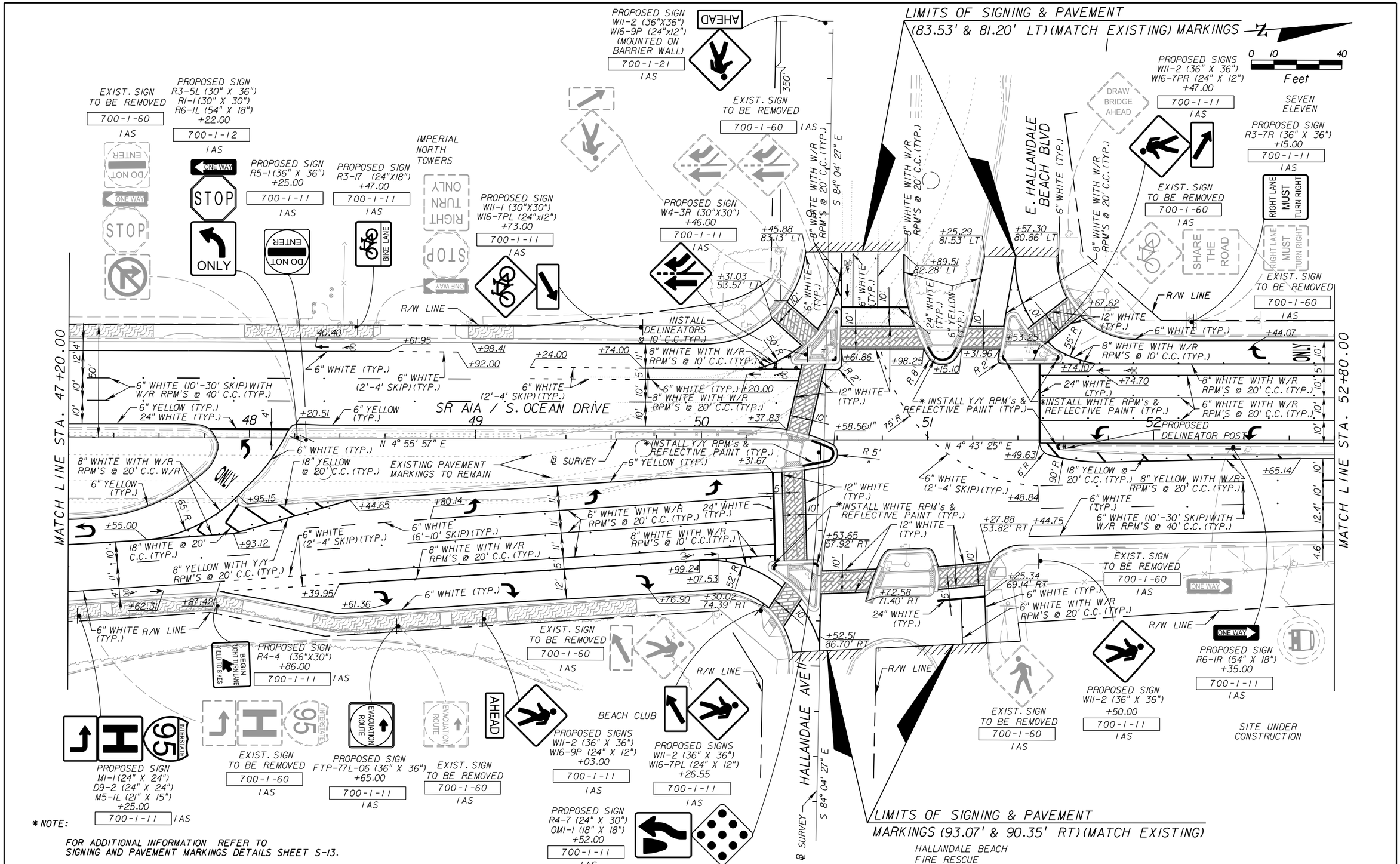

*NOTE:

FOR ADDITIONAL INFORMATION REFER TO SIGNING AND PAVEMENT MARKINGS DETAILS SHEET S-13.

REVISIONS			
DATE	DESCRIPTION	DATE	DESCRIPTION

ENGINEER OF RECORD:
AES ENGINEERING, INC
13500 S.W. 88th STREET, SUITE 265
MIAMI, FLORIDA 33186
TEL. (786) 250-8809
CA No. 29369
MICHEL A. RODRIGUEZ, P.E. 63342

STATE OF FLORIDA
DEPARTMENT OF TRANSPORTATION

ROAD NO.	COUNTY	FINANCIAL PROJECT ID
A1A	BROWARD	428727-1-52-01

SIGNING AND PAVEMENT MARKINGS

SHEET NO. S-11

emsterra 12/5/2013 11:16:17 AM H:\e\Projects\428727\5201\signing\planspl1.dgn

NOTICE: THE OFFICIAL RECORD OF THIS SHEET IS THE ELECTRONIC FILE SIGNED AND SEALED UNDER RULE 61G15-23.003, F.A.C.

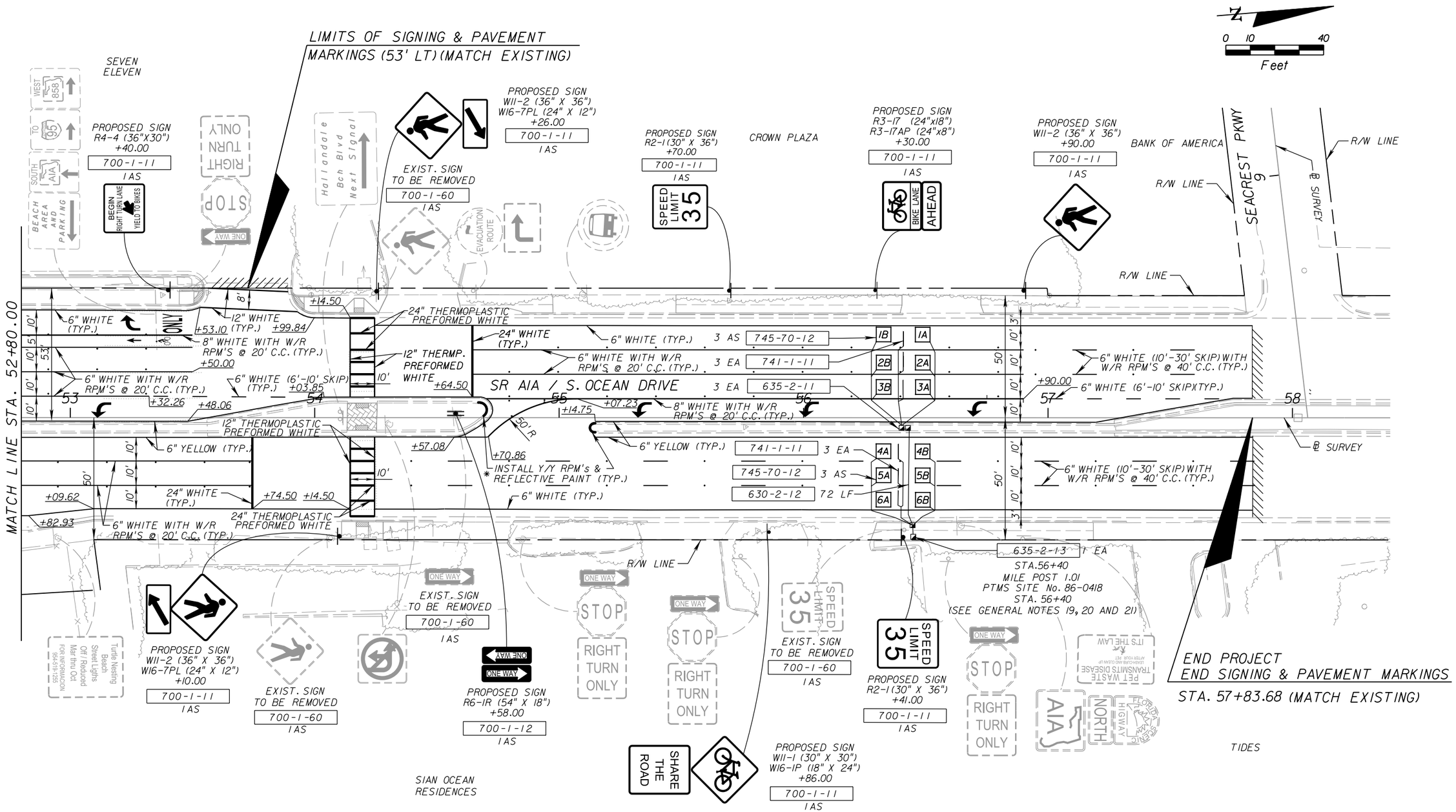

* NOTE:

FOR ADDITIONAL INFORMATION REFER TO SIGNING AND PAVEMENT MARKINGS DETAILS SHEET S-13.

REVISIONS			
DATE	DESCRIPTION	DATE	DESCRIPTION

ENGINEER OF RECORD:
AES ENGINEERING, INC
13500 S.W. 88th STREET, SUITE 265
MIAMI, FLORIDA 33186
TEL. (786) 250-8809
CA No. 29369
MICHEL A. RODRIGUEZ, P.E. 63342

STATE OF FLORIDA
DEPARTMENT OF TRANSPORTATION

ROAD NO.	COUNTY	FINANCIAL PROJECT ID
AIA	BROWARD	428727-1-52-01

SIGNING AND PAVEMENT MARKINGS

SHEET NO. S-12

NOTICE: THE OFFICIAL RECORD OF THIS SHEET IS THE ELECTRONIC FILE SIGNED AND SEALED UNDER RULE 61G15-23.003, F.A.C.

emsterra 12/5/2013 11:16:18 AM H:\e\Projects\428727\5201\signing\planspl2.dgn

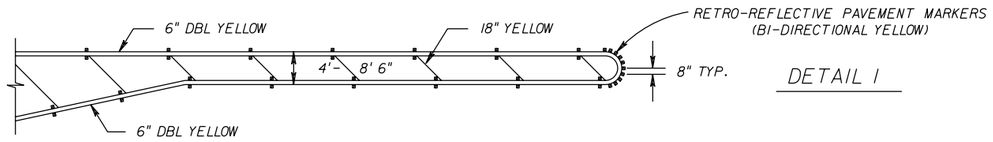

DETAIL 1

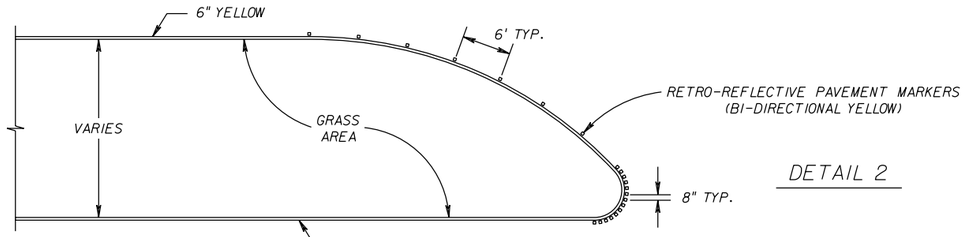

DETAIL 2

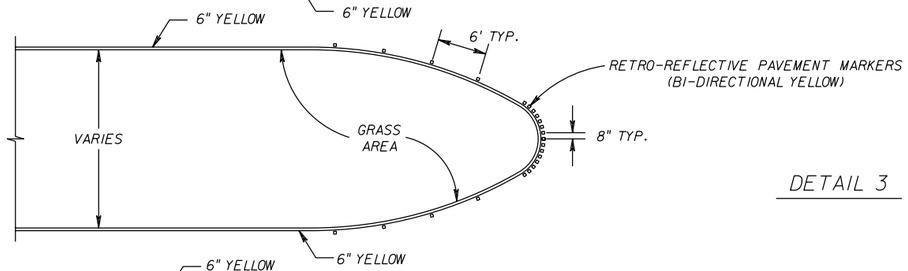

DETAIL 3

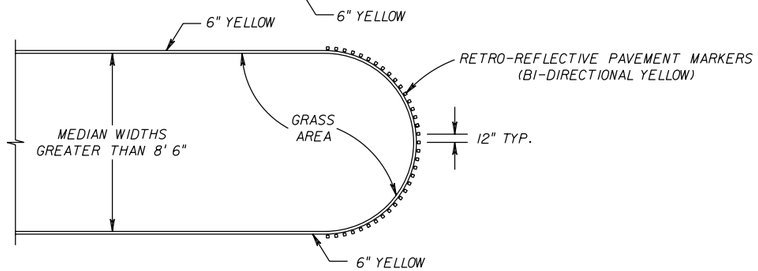

DETAIL 4

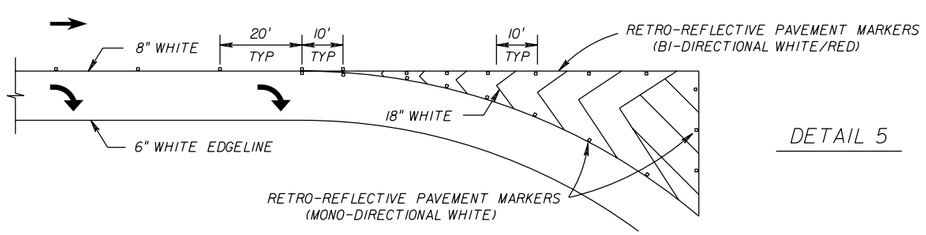

DETAIL 5

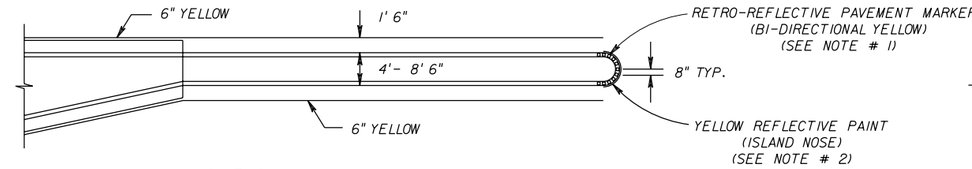

DETAIL 6

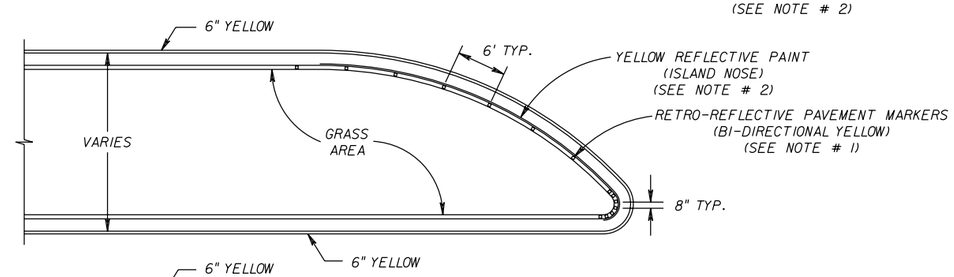

DETAIL 7

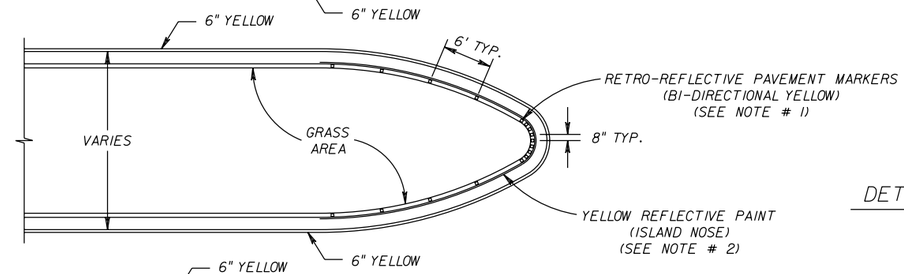

DETAIL 8

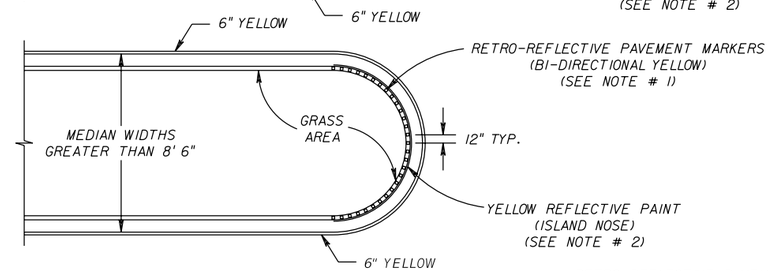

DETAIL 9

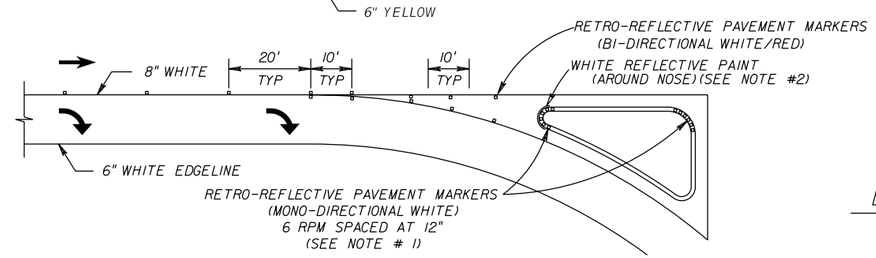

DETAIL 10

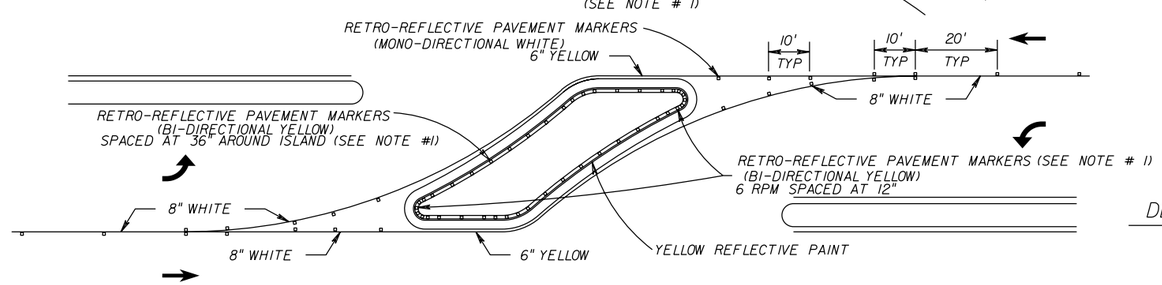

DETAIL 11

NOTES:

1. RETRO-REFLECTIVE PAVEMENT MARKERS SHALL BE INSTALLED ON TOP OF THE CURB (TYPE "D" OR "F") IN ACCORDANCE WITH SECTION 706 OF THE GOVERNING SPECIFICATIONS AND APPLICABLE SPECIAL PROVISIONS. THE RETRO-REFLECTIVE PAVEMENT MARKERS SHALL BE INSTALLED WITHIN 72 HOURS OF CONSTRUCTION OF THE ISLAND NOSE.
2. FURNISH AND INSTALL REFLECTIVE PAINT ON THE FACE OF CURB FOR THE LIMITS SHOWN IN THE ABOVE DETAILS. THE MINIMUM WET FILM THICKNESS FOR ALL PAINTED AREAS SHALL BE 15 MILS.

→ DIRECTION OF TRAFFIC

REVISIONS			
DATE	DESCRIPTION	DATE	DESCRIPTION

ENGINEER OF RECORD:
AES ENGINEERING, INC
13500 S.W. 88th STREET, SUITE 265
MIAMI, FLORIDA 33186
TEL. (786) 250-8809
CA No. 29369
MICHEL A. RODRIGUEZ, P.E. 63342

STATE OF FLORIDA
DEPARTMENT OF TRANSPORTATION

ROAD NO.	COUNTY	FINANCIAL PROJECT ID
AIA	BROWARD	428727-1-52-01

SIGNING AND PAVEMENT MARKINGS DETAILS

SHEET NO.
S-13

NOTICE: THE OFFICIAL RECORD OF THIS SHEET IS THE ELECTRONIC FILE SIGNED AND SEALED UNDER RULE 61G15-23.003, F.A.C.

SIGN NAME	SIGN 1	QTY	1	SIGN NUMBER	STATION(S)
PANEL		BORDER			12+41.00
WIDTH	2'-0"	WIDTH	.0625"		
HEIGHT	2'-0"	RADII	0.156"		
LEGEND	Black	COLOR	Black		
COLOR	Yellow				

SYMBOL(S)	ANGLE	X	Y	WID	HT

SIGN NUMBER		CLEARANCE Edge Of Lane	COLUMN SIZE		AVERAGE LENGTH

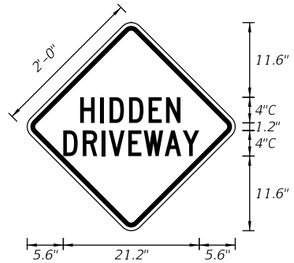

NO. OF LIGHT FIXTURES		FIXTURE SPACING		PHOTOMETRIC CURVE		WATT		VOLTAGE	

COPY	H	I	D	D	E	N		L																
SPACE	8.3	11.4	12.8	15.9	18.9	21.6		15.6																
COPY	D	R	I	V	E	W	A	Y		L														
SPACE	5.6	8.7	11.6	12.7	15.7	18.1	21.4	24.2		21.2														
COPY																								
SPACE																								
COPY																								
SPACE																								
COPY																								
SPACE																								
COPY																								
SPACE																								

SIGN NAME	SIGN 2	QTY	1	SIGN NUMBER	STATION(S)
PANEL		BORDER			11+00.00
WIDTH	2'-0"	WIDTH	0.19"		
HEIGHT	1'-0"	RADII	0.94"		
LEGEND	Black	COLOR	Black		
COLOR	White				

SYMBOL(S)	ANGLE	X	Y	WID	HT

SIGN NUMBER		CLEARANCE Edge Of Lane	COLUMN SIZE		AVERAGE LENGTH

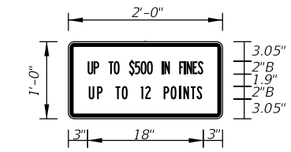

NO. OF LIGHT FIXTURES		FIXTURE SPACING		PHOTOMETRIC CURVE		WATT		VOLTAGE	

COPY	U	P		T	O		$	5	0	0		I	N		F	I	N	E	S		L			
SPACE	3	3.9	4.8	6.3	7.1	8	9.4	10.3	11.2	12.2	13.1	14.6	14.9	15.8	17.3	18.1	18.4	19.3	20.1		18			
COPY	U	P		T	O		1	2		P	O	I	N	T	S		L							
SPACE	3.2	4.5	5.3	7.3	8.3	9.2	11.2	12	12.8	14.8	15.9	17.2	17.9	19.1	20		17.7							
COPY																								
SPACE																								
COPY																								
SPACE																								
COPY																								
SPACE																								
COPY																								
SPACE																								

SIGN NAME		QTY		SIGN NUMBER	STATION(S)
PANEL		BORDER			
WIDTH		WIDTH			
HEIGHT		RADII			
LEGEND		COLOR			
COLOR					

SYMBOL(S)	ANGLE	X	Y	WID	HT

SIGN NUMBER		CLEARANCE Edge Of Lane	COLUMN SIZE		AVERAGE LENGTH

NO. OF LIGHT FIXTURES		FIXTURE SPACING		PHOTOMETRIC CURVE		WATT		VOLTAGE	

COPY																								
SPACE																								
COPY																								
SPACE																								
COPY																								
SPACE																								
COPY																								
SPACE																								
COPY																								
SPACE																								
COPY																								
SPACE																								

SIGN NAME		QTY		SIGN NUMBER	STATION(S)
PANEL		BORDER			
WIDTH		WIDTH			
HEIGHT		RADII			
LEGEND		COLOR			
COLOR					

SYMBOL(S)	ANGLE	X	Y	WID	HT

SIGN NUMBER		CLEARANCE Edge Of Lane	COLUMN SIZE		AVERAGE LENGTH

NO. OF LIGHT FIXTURES		FIXTURE SPACING		PHOTOMETRIC CURVE		WATT		VOLTAGE	

COPY																								
SPACE																								
COPY																								
SPACE																								
COPY																								
SPACE																								
COPY																								
SPACE																								
COPY																								
SPACE																								
COPY																								
SPACE																								

NOTICE: THE OFFICIAL RECORD OF THIS SHEET IS THE ELECTRONIC FILE SIGNED AND SEALED UNDER RULE 61G15-23.003, F.A.C.

REVISIONS			
DATE	DESCRIPTION	DATE	DESCRIPTION

ENGINEER OF RECORD:
AES ENGINEERING, INC
13500 S.W. 88th STREET, SUITE 265
MIAMI, FLORIDA 33186
TEL. (786) 250-8809
CA No. 29369
MICHEL A. RODRIGUEZ, P.E. 63342

STATE OF FLORIDA
DEPARTMENT OF TRANSPORTATION

ROAD NO.	COUNTY	FINANCIAL PROJECT ID
A1A	BROWARD	428727-1-52-01

GUIDE SIGN WORK SHEET

SHEET NO.
S-14

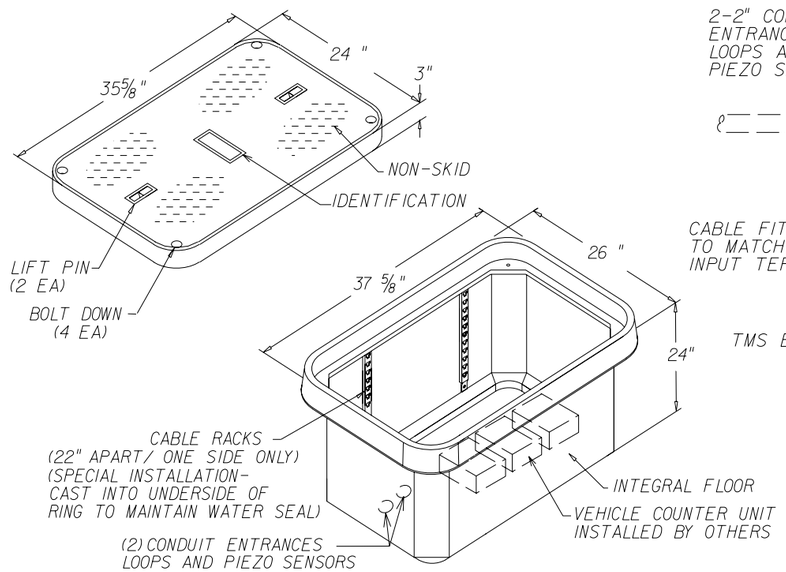

TMS ENCLOSURE LAYOUT
SEE NOTE 1

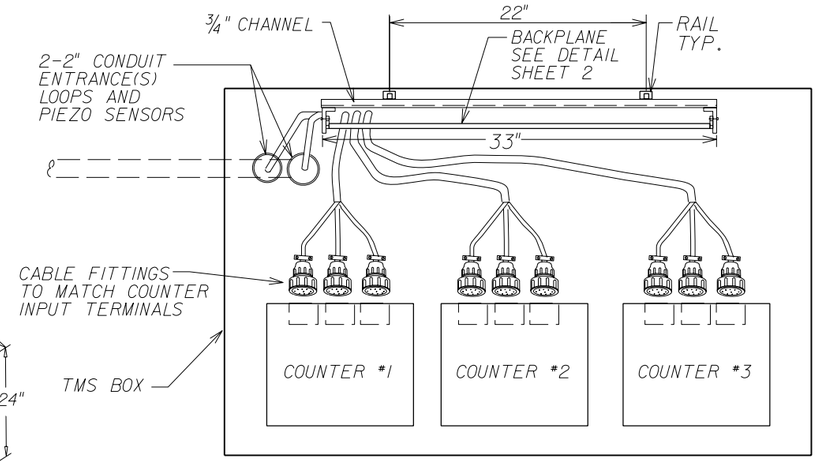

TMS BOX PLAN VIEW

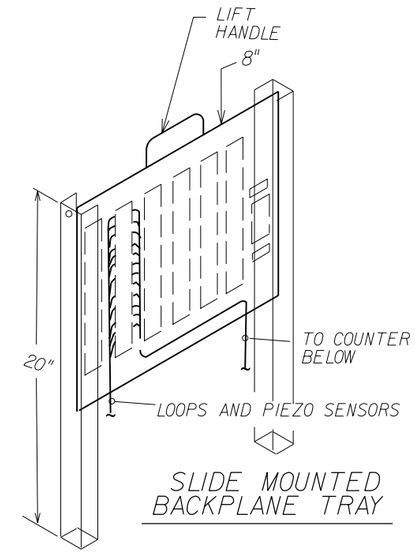

SLIDE MOUNTED BACKPLANE TRAY

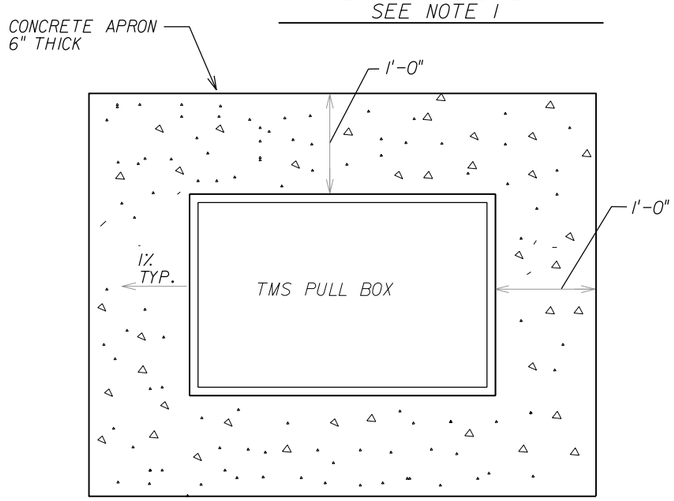

CONCRETE APRON

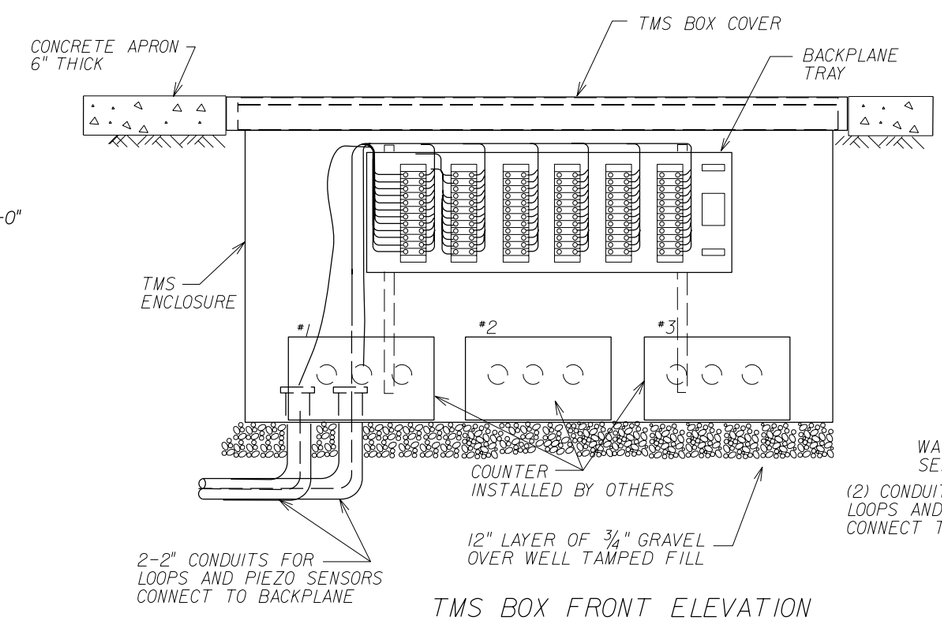

TMS BOX FRONT ELEVATION

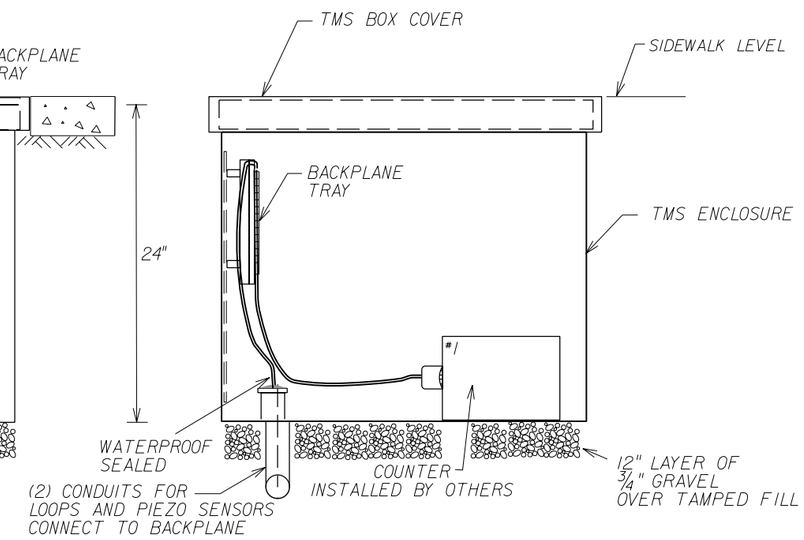

TMS BOX SIDE ELEVATION

NOTES:
1. TMS PULL BOX SHALL NOT BE INSTALLED IN ROADWAY OR DRIVEWAY.

2. CONCRETE PAD AND TMS PULL BOX SHALL BE INSTALLED FLUSH WITH THE FINISHED SIDEWALK AND BE INSTALLED IN A NON-PONDING AREA.

NOT TO SCALE

UNDERGROUND TRAFFIC MONTORING SITE

NOTICE: THE OFFICIAL RECORD OF THIS SHEET IS THE ELECTRONIC FILE SIGNED AND SEALED UNDER RULE 61G15-23.003, F.A.C.

REVISIONS			
DATE	DESCRIPTION	DATE	DESCRIPTION

ENGINEER OF RECORD:
AES ENGINEERING, INC
13500 S.W. 88th STREET, SUITE 265
MIAMI, FLORIDA 33186
TEL. (786) 250-8809
CA No. 29369
MICHEL A. RODRIGUEZ, P.E. 63342

STATE OF FLORIDA
DEPARTMENT OF TRANSPORTATION

ROAD NO.	COUNTY	FINANCIAL PROJECT ID
A1A	BROWARD	428727-1-52-01

UNDERGROUND TMS ENCLOSURE DETAILS

SHEET NO. S-15

emslerra 12/5/2013 11:39:18 AM H:\e\Projects\428727152O1\signing\SPDTSP15.DGN

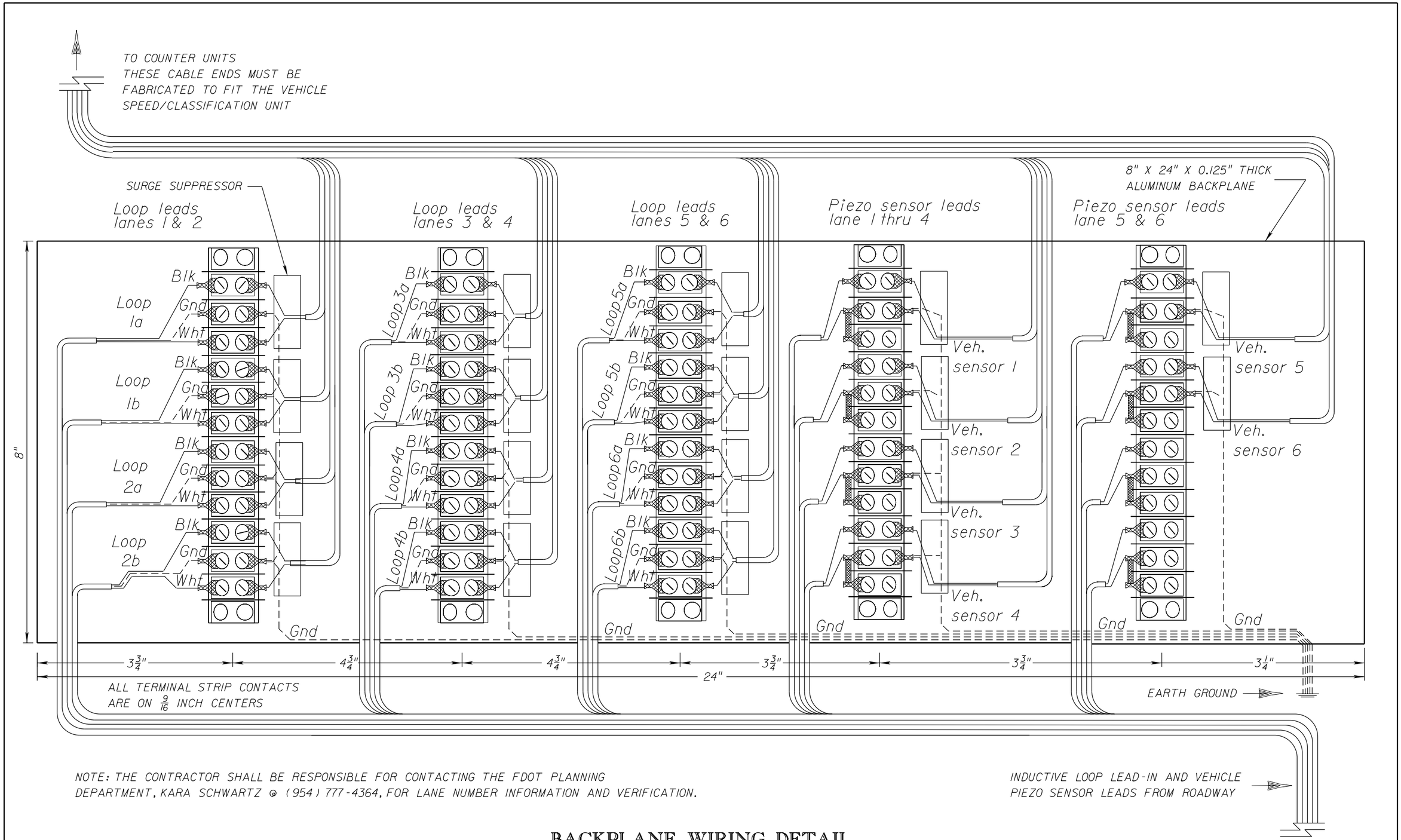

NOTE: THE CONTRACTOR SHALL BE RESPONSIBLE FOR CONTACTING THE FDOT PLANNING DEPARTMENT, KARA SCHWARTZ @ (954) 777-4364, FOR LANE NUMBER INFORMATION AND VERIFICATION.

BACKPLANE WIRING DETAIL

REVISIONS			
DATE	DESCRIPTION	DATE	DESCRIPTION

ENGINEER OF RECORD:
AES ENGINEERING, INC
13500 S.W. 88th STREET, SUITE 265
MIAMI, FLORIDA 33186
TEL. (786) 250-8809
CA No. 29369
MICHEL A. RODRIGUEZ, P.E. 63342

STATE OF FLORIDA
DEPARTMENT OF TRANSPORTATION

ROAD NO.	COUNTY	FINANCIAL PROJECT ID
A1A	BROWARD	428727-1-52-01

UNDERGROUND TMS
BACKPLANE WIRING DETAILS

SHEET NO.
S-16

emslerra 12/5/2013 11:39:19 AM H:\e\Projects\4287271520I\signing\SPDTSP16.DGN

NOTICE: THE OFFICIAL RECORD OF THIS SHEET IS THE ELECTRONIC FILE SIGNED AND SEALED UNDER RULE 61G15-23.003, F.A.C.

STATE OF FLORIDA
DEPARTMENT OF TRANSPORTATION

CONTRACT PLANS

FINANCIAL PROJECT ID 428727-1-52-01
(FEDERAL FUNDS)
BROWARD COUNTY (86030)
STATE ROAD NO. A1A
SOUTH OCEAN DRIVE
FROM COUNTY LINE ROAD TO SEACREST PARKWAY

SIGNALIZATION PLANS

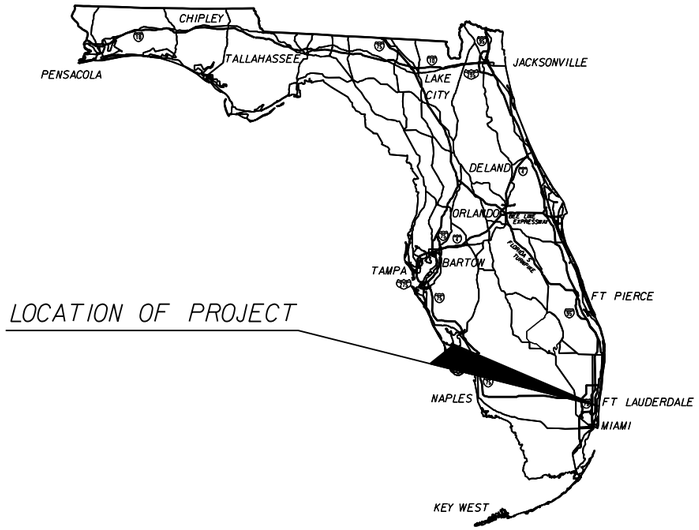

LOCATION OF PROJECT

INDEX OF SIGNALIZATION PLANS

SHEET NO.	SHEET DESCRIPTION
T-1	KEY SHEET
T-2	TABULATION OF QUANTITIES
T-3 thru T-4	GENERAL NOTES
T-5 thru T-11	SIGNALIZATION PLAN
T-12	MAST ARM TABULATION
T-13	STANDARD MAST ARM ASSEMBLIES DATA TABLE
T-14	VIDEO DETECTOR & IISS DETAILS
T-15 thru T-19	MAST ARM POLE LOCATION UTILITY DETAILS
T-20 thru T-21	GUIDE SIGN WORK SHEET
T-22	STRUCTURAL GENERAL NOTES
T-23	FOUNDATION NOTES
T-24	MICROPILE TABLE, NOTES AND DETAILS
T-25	DRILL SHAFT TABLE, NOTES AND DETAILS
T-26	MAST ARM 2-2 MICROPILE FOUNDATION
T-27	MAST ARM DRILL SHAFT FOUNDATION (1 OF 2)
T-28	MAST ARM DRILL SHAFT FOUNDATION (2 OF 2)
T-29	DRILL SHAFT FOUNDATION REINFORCING BAR LIST
GT-1 thru GT-5	REPORT OF CORE BORINGS

SIGNALIZATION SHOP DRAWINGS
TO BE SUBMITTED TO:

AMAZIA KIBOKO, P.E.
10305 N.W. 41st Street
Suite 200
Miami, FL 33178
(305) 591-8777

PLANS PREPARED BY:

F.R. Aleman & Associates Inc.
10305 N.W. 41 STREET
Suite 200
MIAMI FL 33178
Tel: (305) 591-8777
C.A. No. 4658
Vendor No. F592751524
Contract No. C-9495
Amazia Kiboko, P.E. No. 49523

NOTE: THE SCALE OF THESE PLANS MAY HAVE CHANGED DUE TO REPRODUCTION.

KEY SHEET REVISIONS	
DATE	DESCRIPTION

SIGNALIZATION PLANS
ENGINEER OF RECORD: AMAZIA L. KIBOKO, P.E.

P.E. NO.: 49523

FDOT PROJECT MANAGER: FAUSTO GOMEZ, P.E.

FISCAL YEAR	SHEET NO.
14	T-1

NOTICE: THE OFFICIAL RECORD OF THIS SHEET IS THE ELECTRONIC FILE SIGNED AND SEALED UNDER RULE 61G15-23.003, F.A.C.

TABULATION OF QUANTITIES

PAY ITEM NO.	DESCRIPTION	UNIT	SHEET NUMBERS T-5 PLAN	T-5 FINAL	T-6 PLAN	T-6 FINAL	T-7 PLAN	T-7 FINAL	T-8 PLAN	T-8 FINAL	T-9 PLAN	T-9 FINAL	T-10 PLAN	T-10 FINAL	T-11 PLAN	T-11 FINAL	PLAN	FINAL	PLAN	FINAL	PLAN	FINAL	TOTAL THIS SHEET PLAN	TOTAL THIS SHEET FINAL	GRAND TOTAL PLAN	GRAND TOTAL FINAL	REF. SHEET
630-2-11	CONDUIT (F&I) (OPEN TRENCH)	LF	10				45																55		55		
630-2-12	CONDUIT (F&I) (DIRECTIONAL BORE)	LF	390		145		295		495				120		110								1555		1555		
630-2-14	CONDUIT (F&I) (ABOVEGROUND)	LF													40								40		40		
632-7-1	SIGNAL CABLE- RECONSTRUCTED INTERSECTION (F&I)	PI	1		1		1		1		1		1		1								7		7		
634-4-400	SIGNALS - SPAN WIRE ASSEMBLY (ADJUST)	PI													1								1		1		
635-2-11	PULL & SPICE BOX (F&I) (STANDARD SIZE)	EA	16		7		12		17				4		5								61		61		
639-1-123	ELEC. PWR SERV. (F&I) (UNDERGROUND)(METER NOT REQ.)	AS	1				1		1														3		3		
639-2-1	ELECTRICAL SERVICE WIRE (F&I)	LF	10				90		40														140		140		
639-3-11	ELECTRICAL SERVICE DISCONNECT (F&I), POLE MOUNT	EA					1																1		1		
641-2-11	PRESTRESSED CONCRETE POLE, F&I, TYPE P-II PEDESTAL	EA					1																1		1		
646-1-11	ALUMINUM SIGNALS POLE (PEDESTAL)	EA	2		2		2		2				1										9		9		
649-31-101	STEEL M/ARM ASSEMBLY (F&I) (WIND SPEED- 150MPH)	EA	1						1														2		2		
	(SINGLE ARM, W/O LUMINAIRE) (36')																										
649-31-102	STEEL M/ARM ASSEMBLY (F&I) (WIND SPEED- 150MPH)	EA	1				3		3														7		7		
	(SINGLE ARM, W/O LUMINAIRE) (46')																										
649-31-103	STEEL M/ARM ASSEMBLY (F&I) (WIND SPEED- 150MPH)	EA	1																				1		1		
	(SINGLE ARM, W/O LUMINAIRE) (60')																										
650-1-311	TRAFFIC SIGNAL (F&I) (3 SEC) (1 WAY) (ALUM.)	AS	9				6		8														23		23		
650-1-511	TRAFFIC SIGNAL (F&I) (5 SEC) (1 WAY) (ALUM.)	AS	1				2		2														5		5		
653-191	PED. SIGNAL (F&I) (LED-COUNTDOWN) (1 WAY)	AS	4		2		2		2														10		10		
660-4-11	VEHICLE DETECTION SYSTEM - VID. (F&I) (CAB. EQUIP.)	EA	3				3		4						2								12		12		
660-4-12	VEH. DETECT. SYSTEM - VID. (F&I) (ABOVE GND. EQUIP.)	EA	3				3		4						2								12		12		
665-1-11	PED. DETECTOR (F&I) STANDARD	EA	4		4				2				3		2								15		15		
665-1-12	PED. DETECTOR (F&I) ACCESSIBLE	EA					2				2												4		4		
670-5-130	TRAFFIC CONTROLLER ASSEMBLY (F&I) (SPECIAL)	AS	1				1		1														3		3		
684-1-1	ITS MANAGED FIELD ETHERNET SWITCH (F&I)	EA	1				1		1														3		3		
690-10	SIGNAL HEAD TRAFFIC ASSEMBLY (REMOVAL)	EA	8				6		8														22		22		
690-20	SIGNAL PEDESTRIAN ASSEMBLY (REMOVAL)	EA	2		1		2		2				1										8		8		
690-31	SIGNAL PEDESTAL (REMOVAL)	EA							1														1		1		
690-34-1	COMPLETE POLE REMOVAL (DEEP) (DIRECT BURIAL)	EA	4				4		4														12		12		
690-50	CONTROLLER ASSEMBLY (REMOVAL), COMPLETE ASSEMBLY	EA	1				1		1														3		3		
690-60	DETECTOR VEHICLE ASSEMBLY (REMOVAL)	EA	3				3		4														10		10		
690-70	DETECTOR PEDESTRIAN ASSEMBLY (REMOVAL)	EA	2		4		2		2		2		1		2								15		15		
690-80	SPAN WIRE ASSEMBLY (REMOVAL)	EA	4				3		4														11		11		
690-90	CONDUIT & CABLING (REMOVAL)	PI	1				1		1														3		3		
690-100	SIGNAL EQUIPMENT MISCELLANEOUS (REMOVAL)	PI	1				1		1														3		3		
700-3-201	SIGN PANEL, F&I, OVERHEAD MOUNT, UP TO 12 SF	EA	1																				1		1		
700-3-601	SIGN PANELS, REMOVE, UP TO 12 SF	EA	3				3																6		6		
700-5-21	INTERNALLY ILLUMINATED SIGN (F&I) (UP TO 12 SF)	EA	1				1		4														6		6		
700-5-22	INTERNALLY ILLUMINATED SIGN (F&I) (12 TO 18 SF)	EA	2				2																4		4		

REVISIONS			
DATE	DESCRIPTION	DATE	DESCRIPTION

F.R. Aleman & Associates Inc.
10305 N.W. 41 STREET
Suite 200
MIAMI FL 33178
Tel: (305) 591-8777
C.A. No. EB 4658
Amazia Kiboko, P.E. No. 49523

STATE OF FLORIDA
DEPARTMENT OF TRANSPORTATION

ROAD NO.	COUNTY	FINANCIAL PROJECT ID
AIA	BROWARD	428727-1-52-01

TABULATION OF QUANTITIES

SHEET NO. T-2

NOTICE: THE OFFICIAL RECORD OF THIS SHEET IS THE ELECTRONIC FILE SIGNED AND SEALED UNDER RULE 61G15-23.003, F.A.C.

GENERAL NOTES:

1. THE AGENCY RESPONSIBLE FOR MAINTENANCE OF THE TRAFFIC SIGNALS AND RELATED COMMUNICATIONS EQUIPMENT IS BROWARD COUNTY TRAFFIC ENGINEERING DIVISION (BCTED). ALL TRAFFIC SIGNAL AND RELATED COMMUNICATION EQUIPMENT WHEN USING PAY ITEM SERIES: 632, 633, 635, 650, 660, 663, 670, 683, 684, 685, 686 AND 784 FOR THIS CONTRACT SHALL BE COMPATIBLE WITH BCTED'S CENTRAL COMPUTER NETWORK SYSTEM. PRIOR TO ANY PURCHASING OF THE ABOVE PRODUCTS, ENSURE THEY HAVE BEEN APPROVED FOR SYSTEM COMPATIBILITY BY THE MAINTAINING AGENCY.

2. THE CONTRACTOR SHALL MAKE ALL VIDEO DETECTORS INSTALLED AS PART OF THE PROJECT FULLY OPERATIONAL IN ACCORDANCE WITH THEIR ASSOCIATED ISOLATED INTERSECTION SIGNAL TIMING CHART WITHIN 24 HOURS OF THEIR INSTALLATION. INITIAL DETECTION ZONES SHALL BE DIMENSIONED 6'X60' PER LANE, 10' AHEAD OF STOP BARS.

3. THE CONTRACTOR SHALL NOTIFY THE APPROPRIATE UTILITY COMPANY TWO (2) FULL WORKING DAYS IN ADVANCE OF ANY EXCAVATION INVOLVING ITS UTILITIES SO THAT A COMPANY REPRESENTATIVE CAN BE PRESENT. THE LOCATION OF THE UTILITIES SHOWN IN THE PLANS ARE APPROXIMATE ONLY. THE EXACT LOCATION SHALL BE DETERMINED BY THE CONTRACTOR DURING CONSTRUCTION.

UTILITY OWNER:

COMPANY	TELEPHONE NUMBERS	CONTACT PERSON
ATLANTIC COMMUNICATIONS	(305) 861-8069 EXT. 3204	DAVID MCBRIDE
AT&T DISTRIBUTION	(954) 309-0753	OTIS KEEVE
BROWARD COUNTY TRAFFIC ENGINEERING DEPARTMENT (BCTED)	(954) 847-2725	GREG LOVAGLIO
BCTED (COPPER INTERCONNECT CABLE)	(954) 847-2752	MIGUEL MORGADO
BCTED (FIBER OPTIC CABLE)	(954) 847-2745	ROBERT BLOUNT
BROWARD COUNTY WATER	(954) 553-6137	DAVID J. O'CONNOR
CITY OF HALLANDALE BEACH	(954) 457-1617	RAISA ZELDIS
CITY OF HOLLYWOOD UTILITIES	(561) 791-9280	GREG JEFFRIES
COMCAST	(954) 447-8408	CHUCK HUSTON
FPL-DISTRIBUTION	(954) 401-4584	BYRON SAMPLE
FPL-TRANSMISSION	(561) 694-4060	GEORGE J. BECK
HOTWIRE COMMUNICATIONS	(954) 628-7022	PHIL GALLUB
MIAMI-DADE COUNTY PUBLIC WORKS	(305) 592-8925 EXT. 258	AURELIO DEL VALLE
MIAMI-DADE WATER & SEWER	(786) 268-5255	PATRICK CHONG
TECO PEOPLES GAS	(954) 453-0812	MAX CHAMORRO
CITY OF NORTH MIAMI BEACH	(305) 948-2980	TARIM ROSSY

4. THE CONTRACTOR SHALL PROVIDE FOUR (4) COPIES OF MARKED-UP (AS-BUILT) CONSTRUCTION PLANS, AND ONE CAD FILE OF SUCH, SEVEN (7) DAYS PRIOR TO FINAL INSPECTION, BY THE MAINTAINING AGENCY. THE CONTRACTOR SHALL BE REQUIRED TO BECOME FAMILIAR WITH AND COMPLY WITH BCTED'S INSPECTION PROCEDURE.

5. ALL STANDARD PULL BOXES SHALL BE COMPOSITE TYPE AND STAMPED "BROWARD COUNTY TRAFFIC SIGNAL" ON THE COVER. LARGE PULL BOXES SHALL BE STAMPED "BROWARD COUNTY TRAFFIC FIBER OPTICS" ON THE COVER.

6. THE CONTRACTOR SHALL CONTACT THE BROWARD OPERATIONS SIGNALIZATION/LIGHTING COORDINATOR FOR ALL SIGNALIZATION INSPECTIONS AT THE BROWARD OPERATIONS CENTER (954) 776-4300; ANDREW.POERIO@DOT.STATE.FL.US

7. ALL EXISTING SIGNALIZATION EQUIPMENT TO REMAIN, INCLUDING LOOP ASSEMBLIES, IS ASSUMED TO BE IN GOOD WORKING ORDER UNLESS BCTED IS NOTIFIED IN WRITING PRIOR TO THE START OF CONSTRUCTION. ANY SUBSEQUENT DAMAGE TO THE SIGNAL EQUIPMENT SHALL BE REPAIRED BY THE CONTRACTOR.

8. THE CONTRACTOR SHALL TAKE ANY/ALL NECESSARY STEPS TO AVOID ENCROACHING UPON FP&L 13kV ENERGIZED POWER LINE.

9. ALL DISCONNECT WIRING HARNESSES SHALL BE COMPRISED OF NYLON, 12-PIN, MATE-N-LOCK MOTOR MOUNT CONNECTORS (MALE AND FEMALE).

10. WHEN THE DEPARTMENT OF TRANSPORTATION DETERMINES THAT THE NEED FOR A TRAFFIC SIGNAL IS CRITICAL TO THE PUBLIC'S WELFARE, EARLY TURN ON OF THE SIGNAL WILL BE REQUIRED BEFORE THE COMPLETION OF THE CONTRACT. THE CONTRACTOR IS RESPONSIBLE FOR THE INTERSECTION UNTIL THE 90 DAY BURN IN PERIOD HAS BEEN COMPLETED. UPON COMPLETION OF THE 90 DAYS BCTED WILL TAKE OVER MAINTENANCE.

11. PRIOR TO BEGINNING CONSTRUCTION, CONTRACTOR SHALL PROVIDE WRITTEN NOTICE OF COMMENCEMENT, VIA E-MAIL TO BCTED AT TEINSPECTION@BROWARD.ORG. NOTICE SHALL INCLUDE THE DATE OF COMMENCEMENT, LOCATION AND TYPE OF WORK, AND INFORMATION REGARDING ANY MALFUNCTIONING SIGNAL EQUIPMENT MAINTENANCE RESPONSIBILITY BELONGS TO CONTRACTOR UNTIL THE COUNTY ISSUES CONDITIONAL ACCEPTANCE AT FINAL INSPECTION, AT WHICH TIME MAINTENANCE RESPONSIBILITIES ARE PROPERLY TRANSFERRED TO THE COUNTY.

12. NO CHANGES TO THE APPOVED SIGNALIZATION PLAN, EQUIPMENT SPECIFICATIONS OR INSTALLATION DETAILS SHALL BE MADE WITHOUT PRIOR APPROVAL OF BROWARD COUNTY TRAFFIC ENGINEERING DIVISION AND THE ENGINEER OF RECORD.

13. VEHICLE DETECTION OF ALL MINOR MOVEMENTS OF SIGNALIZED LOCATIONS MUST BE PROVIDED FOR THROUGHOUT THE SPAN OF THE PROJECT. IMPLEMENTATION OF THIS DETECTION SHALL BE PAID FOR UNDER 102-107-1. THIS MAY BE DONE WITH EXISTING DETECTION, INTERIM DETECTION AND/OR THE FINAL VEHICLE DETECTORS. ANY MALFUNCTION SHALL BE RESPONDED TO BY THE CONTRACTOR WITHIN TWO (2) HOURS AND SHALL BE REPAIRED WITHIN TWENTY-FOUR (24) HOURS.

14. IT IS THE CONTRACTOR'S RESPONSIBILITY TO REVIEW THE PLACEMENT OF THE VIDEO IMAGE DETECTION DEVICES AND COORDINATE WITH THE ENGINEER OF RECORD TO DETERMINE THE MOST OPTIMAL LOCATION FOR THE INSTALLATION OF THE VIDEO IMAGE DETECTION DEVICES IN ORDER TO MEET THE PERFORMANCE REQUIREMENTS OF THE TECHNICAL SPECIFICATIONS FOR PAY ITEM 660-4-12, AS DESCRIBED ON THE BROWARD COUNTY TRAFFIC ENGINEERING DIVISION WEBSITE.

15. ALL SIGNALIZED EQUIPMENT THAT IS REMOVED EXCEPT AS FURTHER NOTED OR AS DIRECTED BY THE ENGINEER SHALL BE PROPERLY DISPOSED OF AT THE CONTRACTOR'S EXPENSE. THE CONTROLLER CABINET AND ITS CONTENTS, ANY ABOVE GROUND DETECTION, AND ALL LED MODULES (VEHICLE AND PEDESTRIAN) SHALL BE DISASSEMBLED INTO THEIR COMPONENT PARTS, TAGGED AS TO LOCATION, PACKAGED AS NEEDED FOR PROTECTION FROM DAMAGE AND DELIVERED TO:
   BROWARD COUNTY TRAFFIC ENGINEERING DIVISION
   OPERATION BUILDING
   2300 WEST COMMERCIAL BOULEVARD
   FORT LAUDERDALE, FLORIDA 33309
   THE WAREHOUSE MANAGER IS TO BE CONTACTED AT (954) 484-9600, EXT. 276 AT LEAST FORTY-EIGHT (48) HOURS PRIOR TO DELIVERY.

16. EARLY TURN-ON FOR ANY NEW SIGNAL INSTALLATION WILL ONLY BE PERMITTED IF AUTHORIZED IN WRITING BY THE BROWARD COUNTY TRAFFIC ENGINEERING DIVISION OR A REPRESENTATIVE OF THE FLORIDA DEPARTMENT OF TRANSPORTATION SIGNAL INSPECTION COORDINATOR. IF THIS NEED ARISES, EITHER THE DIVISION OR THE DEPARTMENT WILL NEGOTIATE WITH THE CONTRACTOR FOR MAINTENANCE OF THE SIGNAL. NEW SIGNAL LOCATIONS WILL NOT BE PLACED ON FULL COLOR OPERATION UNTIL THE DATE OF INSPECTION EXCEPT AS STATED ABOVE. NEW SIGNAL LOCATIONS SHALL BE FLASHED NO LESS THAN THREE (3) BUSINESS DAYS OR MORE THAN TEN (10) BUSINESS DAYS PRIOR TO THE INSPECTION. SIGNAL HEADS ARE TO REMAIN BAGGED PRIOR TO THIS TIME. CONTACT MR. ANDREW POERIO (FDOT/SIGNAL INSPECTION) AT (954) 868-0023; ANDREW.POERIO@DOT.STATE.FL.US

17. FLORIDA DEPARTMENT OF TRANSPORTATION AND FLORIDA POWER AND LIGHT'S POLICY IS TO SECURE AN ELECTRICAL INSPECTION AND/OR AUTHORIZATION LETTER PRIOR TO ENERGIZING THE NEW ELECTRICAL SERVICE.

18. FOR VERIFIED VERTICAL HORIZONTAL (VVH) TEST HOLE LOCATIONS INDICATED ON THE SIGNALIZATION PLAN SHEETS, REFER TO THE VVH TEST HOLE INFORMATION TABLE LOCATED WITHIN THE ROADWAY PLAN SET FOR UTILITIES THAT ARE IN CONFLICT WITH PROPOSED MAST ARM PLACEMENTS.

COMMUNICATIONS NOTES:

1. THE AGENCY RESPONSIBLE FOR MAINTENANCE OF THE TRAFFIC SIGNALS AND RELATED COMMUNICATIONS EQUIPMENT IS BROWARD COUNTY TRAFFIC ENGINEERING DIVISION (BCTED). ALL TRAFFIC SIGNAL AND RELATED COMMUNICATION EQUIPMENT WHEN USING PAY ITEM SERIES: 632, 633, 635, 650, 660, 663, 670, 683, 684, 685, 686 AND 784 FOR THIS CONTRACT SHALL BE COMPATIBLE WITH BCTED'S CENTRAL COMPUTER NETWORK SYSTEM. PRIOR TO ANY PURCHASING OF THE ABOVE PRODUCTS, ENSURE THEY HAVE BEEN APPROVED FOR SYSTEM COMPATIBILITY BY THE MAINTAINING AGENCY.

2. IF THERE ARE COPPER INTERCONNECT CABLE/S WITHIN YOUR PROJECT LIMITS OR WITHIN 1500 FEET OF YOUR PROJECT LIMITS, CONTACT THE TRAFFIC SIGNAL SUPERVISOR AT TECOMMUNICATIONS@BROWARD.ORG OR 954-847-2752. IF THERE ARE FIBER OPTIC CABLE/S WITHIN YOUR PROJECT LIMITS OR WITHIN 1500 FEET OF YOUR PROJECT LIMITS CONTACT THE COMMUNICATIONS MANAGER AT TECOMMUNICATIONS@BROWARD.ORG OR 954-847-2745.

3. ALL BCTED COMMUNICATIONS CABLES/CONDUIT SHALL BE LOCATED A MINIMUM OF 48 HOURS IN ADVANCE.

BROWARD COUNTY TRAFFIC ENGINEERING DIVISION
PROCEDURE FOR NOTIFICATION OF COMMUNICATION DISRUPTION

4. COPPER INTERCONNECT CABLE NOTIFICATION CONTACT PERSON
   WHEN COMMUNICATIONS TO AN INTERSECTION MUST BE DISRUPTED BY A CONTRACTOR TO PERFORM WORK, THE CONTRACTOR SHALL PROVIDE TWO DAY ADVANCE NOTICE IN WRITING TO THE BROWARD COUNTY TRAFFIC ENGINEERING DIVISION. THIS NOTIFICATION SHALL BE CONVEYED VIA ELECTRONIC MAIL (EMAIL) TO THE TRAFFIC SIGNAL SUPERVISOR AT TECOMMUNICATIONS@BROWARD.ORG.

5. NOTIFICATION SHALL INCLUDE CONTACT PERSON, TELEPHONE NUMBER, PURPOSE, LOCATION AND DURATION. THE DISRUPTION SHALL LAST FOR NO MORE THAN 3 CONSECUTIVE BUSINESS DAYS. WHERE POSSIBLE, THE DISRUPTION SHALL BE DURING OFF PEAK HOURS BEGINNING AT 9:00AM AND ENDING AT 3:00PM.

FIBER OPTIC CABLE NOTIFICATION CONTACT PERSON

6. WHEN COMMUNICATIONS TO AN INTERSECTION MUST BE DISRUPTED BY A CONTRACTOR TO PERFORM WORK, THE CONTRACTOR SHALL PROVIDE TWO DAY ADVANCE NOTICE IN WRITING TO THE BROWARD COUNTY TRAFFIC ENGINEERING DIVISION. THIS NOTIFICATION SHALL BE CONVEYED VIA ELECTRONIC MAIL (EMAIL) TO THE COMMUNICATIONS MANAGER AT TECOMMUNICATIONS@BROWARD.ORG. NOTIFICATION SHALL INCLUDE CONTACT PERSON, TELEPHONE NUMBER, PURPOSE, LOCATION AND DURATION. THE DISRUPTION SHALL LAST FOR NO MORE THAN 3 CONSECUTIVE BUSINESS DAYS. WHERE POSSIBLE, THE DISRUPTION SHALL BE DURING OFF PEAK HOURS BEGINNING AT 9:00AM AND ENDING AT 3:00PM.

NOTICE: THE OFFICIAL RECORD OF THIS SHEET IS THE ELECTRONIC FILE SIGNED AND SEALED UNDER RULE 61G15-23.003, F.A.C.

REVISIONS			
DATE	DESCRIPTION	DATE	DESCRIPTION

F.R. Aleman & Associates Inc.
10305 N.W. 41 STREET
Suite 200
MIAMI FL 33178
Tel: (305) 591-8777
C.A. No. EB 4658
Amazia Kiboko, P.E. No. 49523

STATE OF FLORIDA
DEPARTMENT OF TRANSPORTATION

ROAD NO.	COUNTY	FINANCIAL PROJECT ID
A1A	BROWARD	428727-1-52-01

GENERAL NOTES

SHEET NO. T-3

PAY ITEM NOTES:

101-1	THE CONTRACTOR SHALL PROVIDE ALL NECESSARY EQUIPMENT INCLUDING A TWO-MAN BUCKET OR PLATFORM LIFT TRUCK FOR THE USE BY THE ENGINEER DURING INSPECTION OF TRAFFIC SIGNALS. INCLUDES THE COST OF MAINTAINING COMMUNICATIONS WITH THE CENTRAL SITE INCLUDING TEMPORARY LINES AND CONNECTIONS.
630-2-11 & 630-2-12	A METAL PULL WIRE SHALL BE INSTALLED WITHIN ANY UNUSED CONDUIT AND SPLICED WITHIN THE PULL BOX TO PROVIDE ELECTRICAL CONTINUITY.
635-2-11	PULL BOXES SHALL HAVE NON-METALLIC QUAZITE "HEAVY DUTY" COVERS RATED FOR A STATIC DESIGN LOAD OF AT LEAST 20,000 LBS OVER A 10" SQUARE AREA. COVERS SHALL BE STAMPED "BROWARD COUNTY TRAFFIC SIGNAL" FOR ALL SIGNALIZATION APPLICATIONS. ALL PULL BOXES SHALL BE OF COMPOSITE MATERIAL. PAY ITEM INCLUDES THE COST OF ALL ASSOCIATED WORK FOR REMOVAL OF PULL BOXES FROM RAMP AREA, INTERCEPTING EXISTING CONDUITS AND RE-ROUTING CONDUITS AND CABLE TO NEW PULL BOX, AND REPLACING CONDUCTORS AS REQUIRED (NO SPLICING ALLOWED).
639-1-123	INCLUDES THE COST OF PROVIDING CONCRETE STUB POLE TO MOUNT SIGNAL DISCONNECT. STUB POLE SHALL BE EXPOSED $10\frac{5}{32}$ ABOVE GRADE WITH DISCONNECT MOUNTED AT $8\frac{5}{32}$ TO BOTTOM. DISCONNECT SHALL USE BREAKERS, NO FUSES OR EXTERNAL SWITCHES PERMITTED. SURGE ARRESTOR SHALL BE WIRED ON THE LOAD SIDE OF THE DISCONNECT. INCLUDE CONCRETE STUB POLE.
646-1-11	ALL PEDESTALS SHALL BE ALUMINUM WITH TRANSFORMER BASES.
649-31-101, 649-31-102 & 649-31-103	A GIVEN MAST ARM/POLE ASSEMBLY LOCATION SHALL BE FIELD VERIFIED AND IDENTIFIED AS FREE OF CONFLICTS AND/OR OBJECTS BY THE CONTRACTOR PRIOR TO PROCUREMENT OF THE ASSOCIATED MAST ARM/POLE ASSEMBLY. ASSEMBLIES SHALL BE SUPPLIED WITH A FACTORY APPLIED SOLAR BLACK FINISH (FEDERAL COLOR NO. 27038), MAST ARMS SHALL BE INSTALLED PERPENDICULAR TO APPROACH.
650-1-311 & 650-1-511	ALL TRAFFIC SIGNAL HEADS SHALL BE STANDARD, NOT LIGHTWEIGHT AND PLACED HORIZONTALLY.
653-191	LED PEDESTRIAN SIGNALS ARE TO BE SINGLE SECTION AND PROVIDED WITH INTERNATIONAL STYLE LENSES.
660-4-11	VIDEO DETECTORS SUPPLIES SHALL MEET BCTED FUNCTIONALITY REQUIREMENTS. INCLUDES THE COST OF SUNSHIELDS AND POINT DISCHARGE DISSIPATION TERMINALS FOR EACH CAMERA. VIDEO CAMERAS SHALL BE COLOR AND CONTAINED IN A SEALED PRESSURIZED HOUSING. AN INTEGRATED MENU-DRIVEN INTERFACE, COAX LINE PROTECTORS AND CAMERA POWER PROTECTORS ARE ALSO INCLUDED, AND REQUIRED, UNDER THIS PAY ITEM. VIDEO DETECTORS SHALL BE GROUNDED PER MANUFACTURER'S RECOMMENDATION.
670-5-130	CONTROLLER ASSEMBLY SHALL BE 2070 TS2 TYPE 1 SHELF-MOUNT WITHIN A TYPE VI CABINET AND 16 CHANNEL CONFLICT MONITOR W. ETHERNET PORT. CONTROLLER SHALL INCLUDE A MINIMUM OF 14 LOAD SWITCH BAYS. CONTROLLER SHALL PROVIDE TOTAL UTILITY AND INTEROPERABILITY WITH BROWARD COUNTY'S UTCS COMPUTER SYSTEM. THE TOP OF THE CONTROLLER PAD SHALL BE 0.5 FT ABOVE HIGHEST ROADWAY ELEVATION. CABINET BASES SHALL BE 46"X 30" SIZE. A POWER TRANSFER SWITCH SHALL BE INCLUDED ON THE INSIDE OF THE CABINET. CABINET SHALL BE PROVIDED WITH SUNSHIELDS (TOP, EAST, WEST, AND SOUTH FACES) AND ANTI-GRAFFITI COATING ON ALL SIDES, EXCEPT POLICE DOOR. THIS PAY ITEM INCLUDES THE COST OF THE CONCRETE FOR THE CONTROLLER PAD AND THE SERVICE PAD. INCLUDES COST OF RELOCATING ATMS COMMUNICATION EQUIPMENT.
690-XX	CONTRACTOR SHALL DELIVER ALL REMOVED TRAFFIC SIGNAL EQUIPMENT, EXCEPT CONCRETE STRAIN POLES, TO: THE BROWARD COUNTY TRAFFIC ENGINEERING DIVISION, 2300 W. COMMERCIAL BLVD, FT. LAUDERDALE, FL 33309. THE CONTRACTOR SHALL CONTACT BCTED (7) FULL WORKING DAYS PRIOR TO DELIVERY. REMOVED CONCRETE STRAIN POLES SHALL BE DISPOSED OF AT THE CONTRACTOR'S EXPENSE IN A MANNER AND LOCATION APPROVED BY THE ENGINEER PRIOR TO REMOVAL. ALSO INCLUDES THE COST OF REMOVING, CAREFULLY STOCKPILING, AND RE-INSTALLING GPS PRE-EMPTION EQUIPMENT ONTO NEW SIGNAL SYSTEM. CONTRACTOR SHALL ENSURE GPS PRE-EMPTION IS FULLY FUNCTIONING AS REQUIRED BY BCTED. DAMAGE AND/OR REPLACEMENT OF ANY PRIVATE PROPERTY SHALL BE AT THE CONTRACTORS EXPENSE AND IS INCLUDED IN THE COST OF REMOVAL.
690-100	INCLUDES THE REMOVAL OF ALL MISCELLANEOUS TRAFFIC SIGNAL AND CONTROL DEVICES FROM INTERSECTION LIMITS NOT IDENTIFIED BY OTHER PAY ITEMS, SUCH AS BUT NOT LIMITED TO LOOP ASSEMBLIES, VDS, PULL BOXES, ELECTRICAL SERVICE DISCONNECTS, ETC.
700-5-21 & 700-5-22	ALL INTERNALLY ILLUMINATED STREET SIGNS SHALL BE LED TYPE, PRODUCING A MINIMUM OF 50 LUMENS PER WATT. SIGNS SHALL BE SINGLE-SIDED AND RIGIDLY AFFIXED TO MAST ARMS. SIGN CONDUCTORS SHALL BE ONE CONTINUOUS RUN FROM THE SIGN TO THE DEDICATED CIRCUIT BREAKER WITH NO SPLICES.

NOTICE: THE OFFICIAL RECORD OF THIS SHEET IS THE ELECTRONIC FILE SIGNED AND SEALED UNDER RULE 61G15-23.003, F.A.C.

SIGNAL HEAD DETAILS

2 | 4 | 6 | 4A

R Y G

3-SECT., 1-WAY
9 AS
650- 1-311

1 | 6

R Y XY XG G

5-SECT., 1-WAY
1 AS
650- 1-511

PEDESTRIAN DETECTOR SIGNS

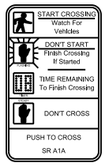

FTP-68B-06 (4 EA)

PEDESTRIAN HEAD DETAILS

P4 | P6

PED. SIGNAL
COUNT-DOWN
1-SECT., 1-WAY
4 AS
653-191

SIGN DETAILS

A

6'-0"

700-5-21 | 1 EA

B

8'-0"

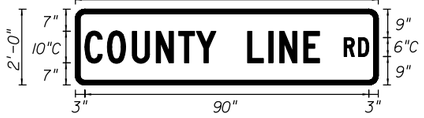

700-5-22 | 2 EA

C

700-3-201 | 1 EA

EXISTING CONTROLLER TIMINGS

CONTROLLER PHASE		1	2	3	4
FACE NUMBER		1,6	2,6	4A	4
DIRECTION		SBL	N/S	EB*	EB**
TIMING FUNCTION	INITIAL GREEN (MIN)	4	7	6	6
	EXTENSION (GAP)	1.5	0.0	2.0	2.0
	MAXIMUM GREEN 1	10	50	18	18
	MAXIMUM GREEN 2				
	YELLOW CLEARANCE	4.0	4.0	4.0	4.0
	ALL RED CLEARANCE	1.0	1.0	1.0	1.0
	PEDESTRIAN WALK		7		7
	PED. CLEARANCE				24
	PHASE RECALL	OFF	MAX	OFF	OFF
	PERMISSIVE	5 SECT			
	FLASH OPERATION		Y	R	R
	GREEN RETURN				

* MASSINI AVENUE
** COUNTY LINE ROAD

EXISTING SOP TO REMAIN

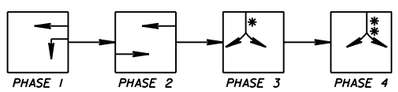

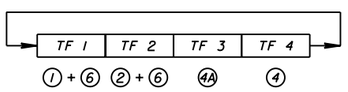

VIDEO DETECTOR CHART

DETECTOR NO.	MOVEMENTS	ZONE
V-1	1,6	OD-1, OD-6/6R
V-2	2	OD-2
V-3	4,4A	OD-4, OD-4A

OD = OCCUPANCY DETECTOR ZONE

CONTROLLER OPERATIONS

1. MAJOR STREET: SR A1A / S. OCEAN DRIVE
   MINOR STREET: MASSINI AVE / COUNTY LINE ROAD
2. FLASHING OPERATION: SR A1A - YELLOW
   MASSINI AVE / COUNTY LINE RD - RED
3. EXISTING SIGNAL OPERATION PLAN TO REMAIN. CONTROLLER TIMING IS EXISTING AND TO REMAIN AS SHOWN.
4. POSTED SPEED LIMIT IS 35 MPH FOR SR A1A / S. OCEAN DRIVE AND 35 MPH FOR MASSINI AVE / COUNTY LINE ROAD.

PLAN SHEET NOTES

1. EXISTING ELECTRICAL SERVICE FOR BCTED TO BE REPLACED.
2. CONTRACTOR TO RESTORE COLORED SIDEWALK IN SW CORNER AFTER INSTALLATION OF MAST ARM POLE 1-3. COST OF RESTORATION INCLUDED IN PAY ITEM 649-31-101.
3. 25' (CLEAR TRUNK) PALM TREE REMOVAL INCLUDED IN PAY ITEM 110-1-1, CLEARING AND GRUBBING.

REMOVAL ITEMS

690-10	8 EA
690-20	2 EA
690-34-1	4 EA
690-50	1 EA
690-60	3 EA
690-70	2 EA
690-80	4 EA
690-90	1 P1
690-100	1 P1
700-3-601	3 EA

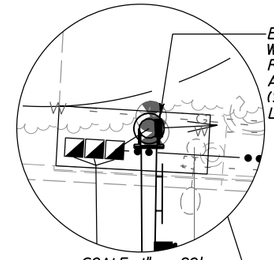

EXISTING GAS MAIN & WATER MAIN TO BE RELOCATED FOR MAST ARM INSTALLATION (SEE MAST ARM POLE LOCATION UTILITY DETAILS)

SCALE: 1" = 20'

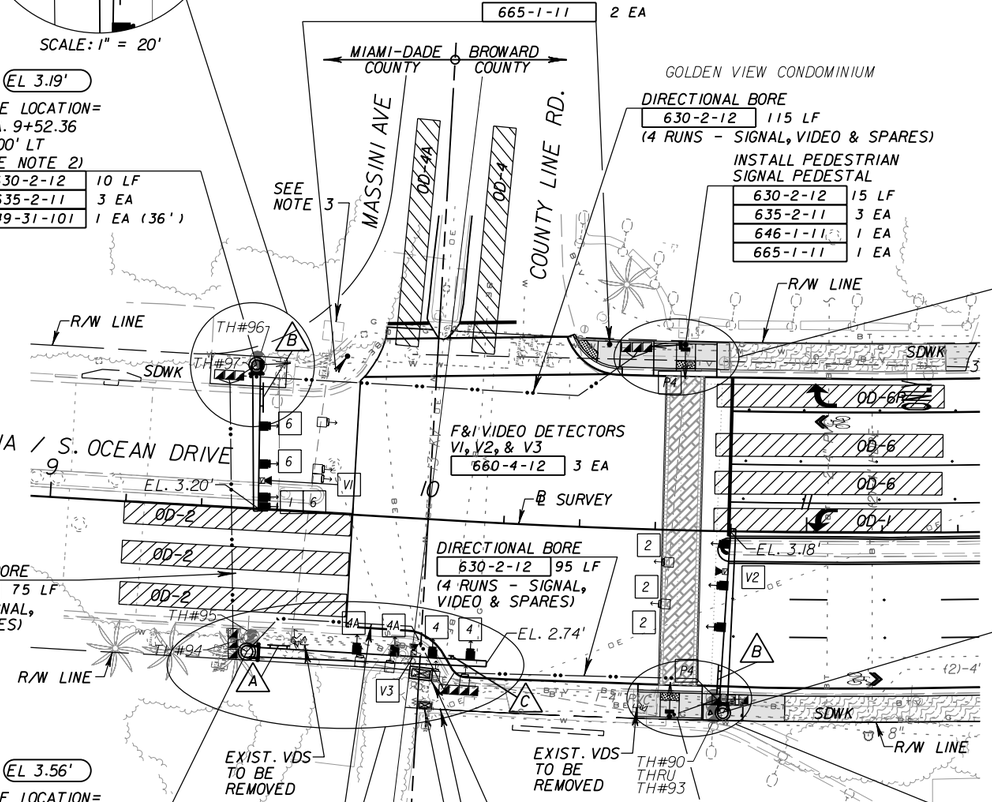

INSTALL PEDESTRIAN DETECTOR ON 5'-6" PEDESTRIAN STUB POLE, INSTALLED ON A TRANSFORMER BASE. CONNECT TO SIGNAL PULL BOX.

665-1-11 | 2 EA

1-3 EL 3.19'

POLE LOCATION=
STA. 9+52.36
38.00' LT
(SEE NOTE 2)

630-2-12	10 LF
635-2-11	3 EA
649-31-101	1 EA (36')

DIRECTIONAL BORE
630-2-12 | 115 LF
(4 RUNS - SIGNAL, VIDEO & SPARES)

INSTALL PEDESTRIAN SIGNAL PEDESTAL

630-2-12	15 LF
635-2-11	3 EA
646-1-11	1 EA
665-1-11	1 EA

F&I VIDEO DETECTORS V1, V2, & V3
660-4-12 | 3 EA

DIRECTIONAL BORE
630-2-12 | 95 LF
(4 RUNS - SIGNAL, VIDEO & SPARES)

DIRECTIONAL BORE
630-2-12 | 75 LF
(4 RUNS - SIGNAL, VIDEO & SPARES)

1-2 EL 3.56'

POLE LOCATION=
STA. 9+54.24
37.75' RT

630-2-11	10 LF
635-2-11	3 EA
649-31-103	1 EA (60')

DIRECTIONAL BORE
630-2-12 | 55 LF
(4 RUNS - SIGNAL, VIDEO & SPARES)

EXIST. VDS TO BE REMOVED

632-7-1	1 P1
635-2-11	4 EA
639-1-123	1 AS
639-2-1	10 LF
660-4-11	3 EA
670-5-130	1 AS
684-1-1	1 EA

EXIST. POLE MOUNTED POWER SERVICE DISCONNECT TO BE REMOVED (SEE NOTE 1)

EXIST. CONTROLLER CABINET TO BE REMOVED

INSTALL PEDESTRIAN SIGNAL PEDESTAL

630-2-12	15 LF
635-2-11	1 EA
646-1-11	1 EA
665-1-11	1 EA

CONTROLLER NOTES:

ALL RECENTLY INSTALLED ATMS CELLULAR COMMUNICATIONS EQUIPMENT TO BE REUSED FROM EXISTING CABINET. CONTRACTOR TO NOTIFY/COORDINATE WITH BCTED BEFORE RE-INSTALLATION.

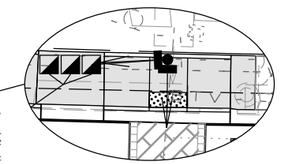

SCALE: 1" = 20'

1-1 EL 2.76'

POLE LOCATION=
STA. 10+78.85
48.08' RT

630-2-12	10 LF
635-2-11	2 EA
649-31-102	1 EA (46')

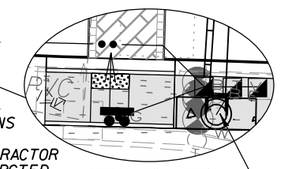

SCALE: 1" = 20'

EXISTING GAS MAIN & BURIED ELECTRIC TO BE RELOCATED FOR MAST ARM INSTALLATION. (SEE MAST ARM POLE LOCATION UTILITY DETAILS)

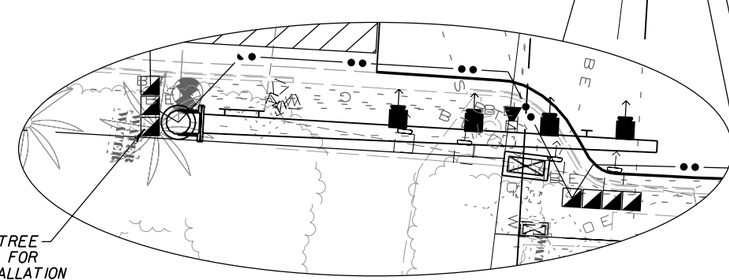

EXISTING PALM TREE TO BE REMOVED FOR MAST ARM INSTALLATION (SEE NOTE 3)

SCALE: 1" = 20'

INTERSECTION # 3047
SR A1A / S. OCEAN DRIVE & DADE-BROWARD COUNTY LINE

NOTICE: THE OFFICIAL RECORD OF THIS SHEET IS THE ELECTRONIC FILE SIGNED AND SEALED UNDER RULE 61G15, F.A.C.

REVISIONS			
DATE	DESCRIPTION	DATE	DESCRIPTION

F.R. Aleman & Associates Inc.
10305 N.W. 41 STREET
Suite 200
MIAMI FL 33178
Tel: (305) 591-8777
C.A. No. EB 4658
Amazia Kiboko, P.E. No. 49523

STATE OF FLORIDA
DEPARTMENT OF TRANSPORTATION

ROAD NO.	COUNTY	FINANCIAL PROJECT ID
A1A	BROWARD	428727-1-52-01

SIGNALIZATION PLAN

SHEET NO. T-5

EXISTING SIGNAL HEAD DETAILS

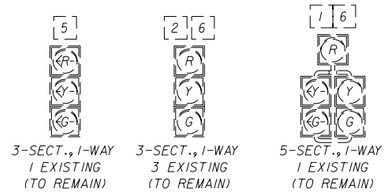

3-SECT., 1-WAY
1 EXISTING
(TO REMAIN)

3-SECT., 1-WAY
3 EXISTING
(TO REMAIN)

5-SECT., 1-WAY
1 EXISTING
(TO REMAIN)

EXISTING PEDESTRIAN HEAD DETAILS

PED. SIGNAL
COUNT-DOWN
1-SECT., 1-WAY
2 EXISTING
(TO REMAIN)

EXISTING SIGN DETAILS

1 EXISTING
(TO REMAIN)

PEDESTRIAN HEAD DETAILS

PED. SIGNAL
COUNT-DOWN
1-SECT., 1-WAY
2 AS
653-191

PEDESTRIAN DETECTOR SIGNS

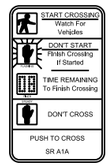

FTP-68B-06 (2 EA)

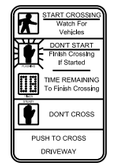

FTP-68B-06 (2 EA)

EXISTING CONTROLLER TIMINGS

	CONTROLLER PHASE	1	2	3	4	5	6
	FACE NUMBER	1	2		P4	5	6
	DIRECTION	SBL	NB		XPED	NBL	SB
TIMING FUNCTION	INITIAL GREEN (MIN)	5	7		7	5	7
	EXTENSION (GAP)	1.5	0.0		0.0	1.5	0.0
	MAXIMUM GREEN 1	12	50		27	12	50
	MAXIMUM GREEN 2						
	YELLOW CLEARANCE	4.0	4.0		4.0	4.0	4.0
	ALL RED CLEARANCE	1.0	1.0		1.0	1.0	1.0
	DETECTOR DELAY					LOCK	
	PEDESTRIAN WALK		7		7		7
	PED. CLEARANCE		21		20		
	PHASE RECALL	OFF	MAX		OFF	OFF	MAX
	PERMISSIVE	5 SECT				NO	
	FLASH OPERATION		Y			R	R
	GREEN RETURN						

EXISTING SOP TO REMAIN

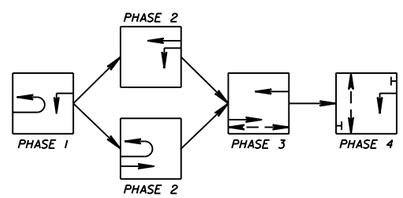

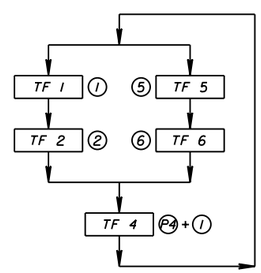

CONTROLLER OPERATIONS

1. MAJOR STREET: SR A1A / S. OCEAN DRIVE
2. FLASHING OPERATION: SIGNAL HEAD NO. 2 & 6 - YELLOW SIGNAL HEAD NO. 1 & 5 - RED
3. EXISTING SIGNAL OPERATION PLAN TO REMAIN. CONTROLLER TIMING IS EXISTING AND TO REMAIN AS SHOWN.
4. POSTED SPEED LIMIT IS 35 MPH FOR SR A1A / S. OCEAN DRIVE.

PLAN SHEET NOTES

1. REMOVE PULL BOXES FROM RAMP AREA. INSTALL NEW PULL BOXES OUTSIDE RAMP AREA. INTERCEPT CONDUITS AND RE-ROUTE CONDUITS AND CABLE TO NEW PULL BOXES. REPLACE CONDUCTORS AS REQUIRED. NO SPLICING ALLOWED.

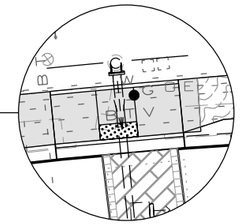

SCALE: 1" = 20'

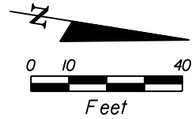

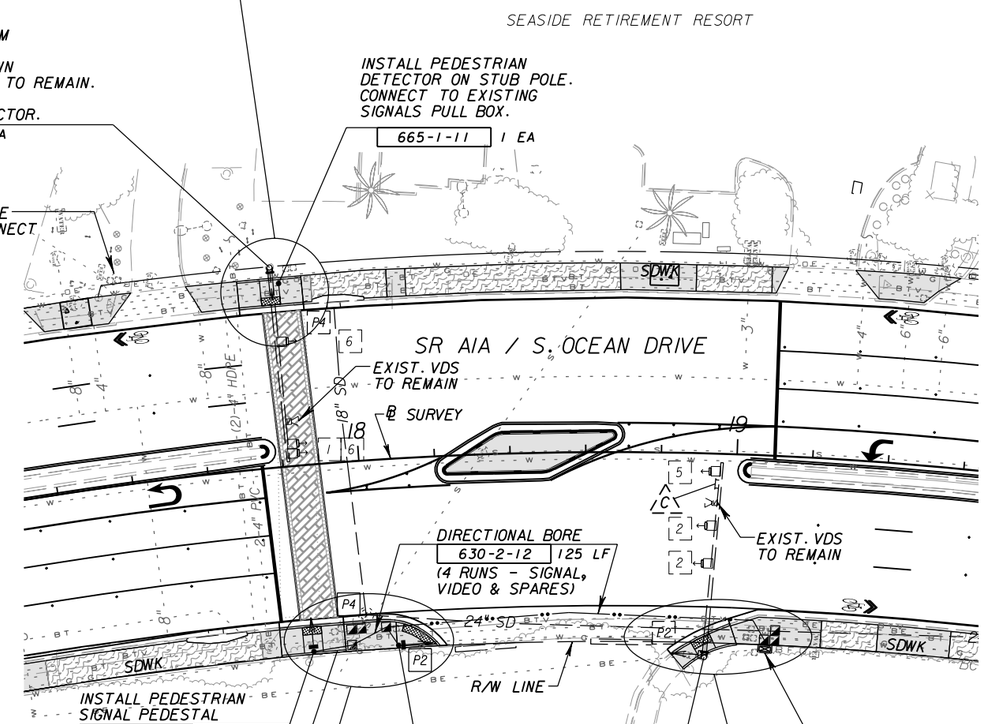

INTERSECTION # 3388
SR A1A / S. OCEAN DRIVE & 2080 MID BLOCK CROSSING

NOTICE: THE OFFICIAL RECORD OF THIS SHEET IS THE ELECTRONIC FILE SIGNED AND SEALED UNDER RULE 61G15, F.A.C.

REVISIONS			
DATE	DESCRIPTION	DATE	DESCRIPTION

F.R. Aleman & Associates Inc.
10305 N.W. 41 STREET
Suite 200
MIAMI FL 33178
Tel: (305) 591-8777
C.A. No. EB 4658
Amazia Kiboko, P.E. No. 49523

STATE OF FLORIDA
DEPARTMENT OF TRANSPORTATION

ROAD NO.	COUNTY	FINANCIAL PROJECT ID
A1A	BROWARD	428727-1-52-01

SIGNALIZATION PLAN

SHEET NO. T-6

SIGNAL HEAD DETAILS

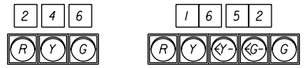

3-SECT., 1-WAY
6 AS
650- 1-311

5-SECT., 1-WAY
2 AS
650- 1-511

SIGN DETAILS

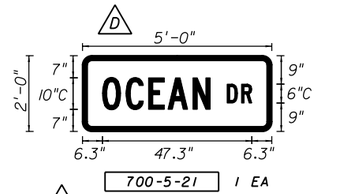

700-5-21 1 EA

700-5-22 2 EA

PEDESTRIAN DETECTOR SIGNS

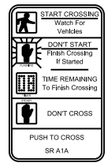

FTP-68B-06 (2 EA)

PEDESTRIAN HEAD DETAILS

PED. SIGNAL
COUNT-DOWN
1-SECT., 1-WAY
2 AS
653-191

EXISTING SOP TO REMAIN

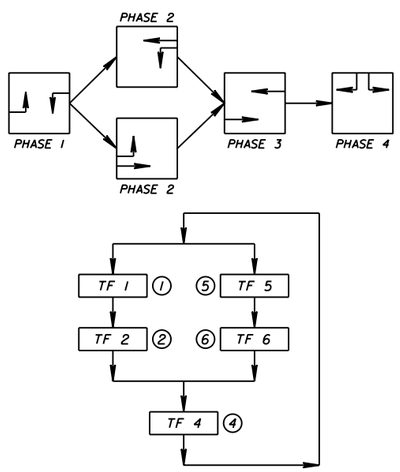

EXISTING CONTROLLER TIMINGS

CONTROLLER PHASE		1	2	3	4	5	6
FACE NUMBER		1	2		4	5	6
DIRECTION		SBL	NB		EB	NBL	SB
TIMING FUNCTION	INITIAL GREEN (MIN)	4	12		6	4	12
	EXTENSION (GAP)	1.5	3.0		2.0	1.5	3.0
	MAXIMUM GREEN 1	12	50		25	12	50
	MAXIMUM GREEN 2						
	YELLOW CLEARANCE	4.0	4.0		4.0	4.0	4.0
	ALL RED CLEARANCE	2.0	2.0		1.5	2.0	2.0
	PEDESTRIAN WALK		7		7+A		
	PED. CLEARANCE				24		
	PHASE RECALL	OFF	MIN		OFF	OFF	MIN
	PERMISSIVE	5 SECT				5 SECT	
	FLASH OPERATION		Y		R		Y
	GREEN RETURN						

VIDEO DETECTOR CHART

DETECTOR NO.	MOVEMENTS	ZONE
V-1	1,6	OD-1, OD-6
V-2	5,2	OD-5, OD-2
V-3	4	OD-4

OD = OCCUPANCY DETECTOR ZONE

CONTROLLER OPERATIONS

1. MAJOR STREET: SR A1A / S. OCEAN DRIVE
   MINOR STREET: HEMISPHERES
2. FLASHING OPERATION: SR A1A - YELLOW
   HEMISPHERES - RED
3. EXISTING SIGNAL OPERATION PLAN TO REMAIN. CONTROLLER TIMING IS EXISTING AND TO REMAIN AS SHOWN.
4. POSTED SPEED LIMIT IS 35 MPH FOR SR A1A / S. OCEAN DRIVE.
5. ALL RECENTLY INSTALLED ATMS CELLULAR COMMUNICATIONS EQUIPMENT TO BE REUSED FROM EXISTING CABINET. CONTRACTOR TO NOTIFY/COORDINATE WITH BCTED BEFORE RE-INSTALLATION.

REMOVAL ITEMS

690-10	6 EA
690-20	2 EA
690-34-1	4 EA
690-50	1 EA
690-60	3 EA
690-70	2 EA
690-80	3 EA
690-90	1 PI
690-100	1 PI
700-3-601	3 EA

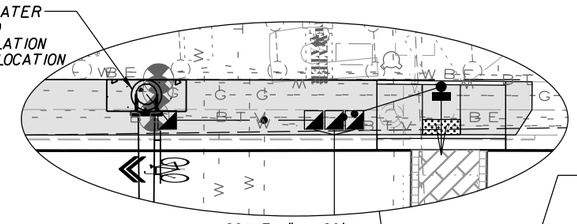

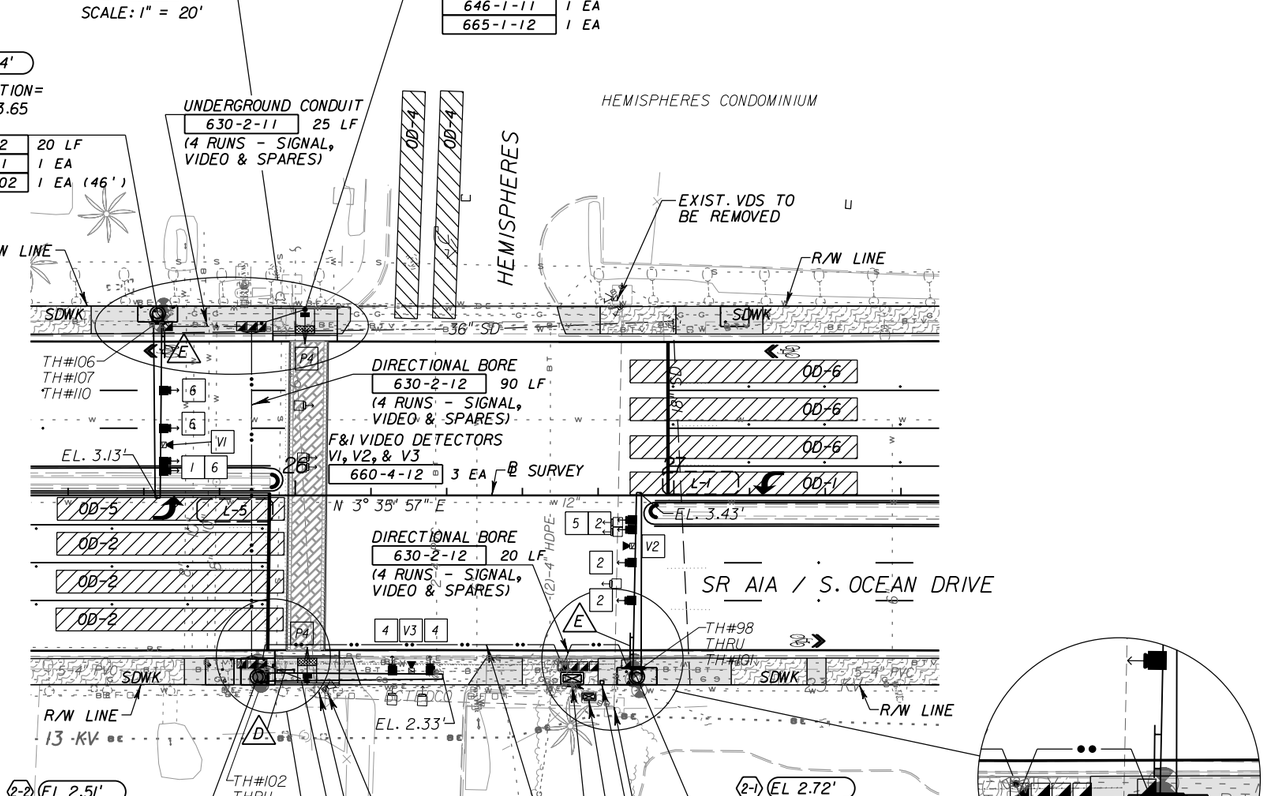

N
0 10 40
Feet

INTERSECTION # 3048
SR A1A / S. OCEAN DRIVE & HEMISPHERES

NOTICE: THE OFFICIAL RECORD OF THIS SHEET IS THE ELECTRONIC FILE SIGNED AND SEALED UNDER RULE 61G15, F.A.C.

REVISIONS			
DATE	DESCRIPTION	DATE	DESCRIPTION

F.R. Aleman & Associates Inc.
10305 N.W. 41 STREET
Suite 200
MIAMI FL 33178
Tel: (305) 591-8777
C.A. No. EB 4658
Amazia Kiboko, P.E. No. 49523

STATE OF FLORIDA
DEPARTMENT OF TRANSPORTATION

ROAD NO.	COUNTY	FINANCIAL PROJECT ID
A1A	BROWARD	428727-1-52-01

SIGNALIZATION PLAN

SHEET NO. T-7

SIGNAL HEAD DETAILS

2 4 6 — R Y G
3-SECT., 1-WAY
8 AS
650- 1-311

1 6 5 2 — R Y FY FG G
5-SECT., 1-WAY
2 AS
650- 1-511

PEDESTRIAN DETECTOR SIGNS

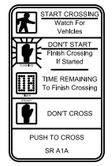

FTP-68B-06 (2 EA)

PEDESTRIAN HEAD DETAILS

P4
PED. SIGNAL
COUNT-DOWN
1-SECT., 1-WAY
2 AS
653-191

SIGN DETAILS

D — 5'-0" × 2'-0"; 7" 10"C 7"; 9" 6"C 9"; 6.3" 47.3" 6.3"
OCEAN DR
700-5-21 2 EA

F — 6'-0" × 2'-0"; 7" 10"C 7"; 9" 6"C 9"; 8" 56" 8"
LA MER DR
700-5-21 2 EA

EXISTING CONTROLLER TIMINGS

		1	2	3	4	5	6
CONTROLLER PHASE		1	2		4,8	5	6
FACE NUMBER		1	2		4,8	5	6
DIRECTION		SBL	NB		E/W	NBL	SB
TIMING FUNCTION	INITIAL GREEN (MIN)	4	12		6	4	12
	EXTENSION (GAP)	1.5	3.0		2.5	1.5	3.0
	MAXIMUM GREEN 1	10	50		15	10	50
	MAXIMUM GREEN 2						
	YELLOW CLEARANCE	4.0	4.0		4.0	4.0	4.0
	ALL RED CLEARANCE	1.5	1.5		1.5	1.5	1.5
	PEDESTRIAN WALK		7		7		7
	PED. CLEARANCE				20		
	PHASE RECALL	OFF	MIN		OFF	OFF	MIN
	PERMISSIVE	5 SECT				5 SECT	
	FLASH OPERATION		Y		R		Y
	GREEN RETURN						

EXISTING SOP TO REMAIN

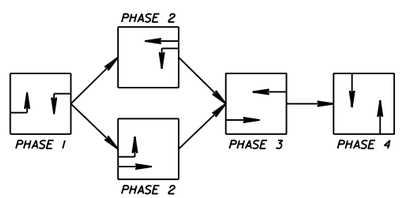

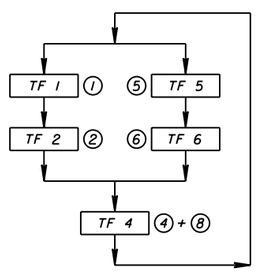

VIDEO DETECTOR CHART

DETECTOR NO.	MOVEMENTS	ZONE
V-1	1,6	OD-1, OD-6
V-2	5,2	OD-5, OD-2
V-3	4	OD-4
V-4	8	OD-8

OD = OCCUPANCY DETECTOR ZONE

CONTROLLER OPERATIONS

1. MAJOR STREET: SR AIA / S. OCEAN DRIVE
   MINOR STREET: LA MER DRIVE
2. FLASHING OPERATION: SR AIA - YELLOW
   LA MER DRIVE - RED
3. EXISTING SIGNAL OPERATION PLAN TO REMAIN. CONTROLLER TIMING IS EXISTING AND TO REMAIN AS SHOWN.
4. POSTED SPEED LIMIT IS 35 MPH FOR SR AIA / S. OCEAN DRIVE.

PLAN SHEET NOTES

1. REMOVE PULL BOX FROM RAMP AREA. INSTALL NEW PULL BOX OUTSIDE RAMP AREA. INTERCEPT CONDUITS AND RE-ROUTE CONDUITS AND CABLE TO NEW PULL BOX. REPLACE CONDUCTORS AS REQUIRED. NO SPLICING ALLOWED.
2. ALL RECENTLY INSTALLED ATMS CELLULAR COMMUNICATIONS EQUIPMENT TO BE REUSED FROM EXISTING CABINET. CONTRACTOR TO NOTIFY/COORDINATE WITH BCTED BEFORE RE-INSTALLATION.
3. LICENSE AGREEMENTS HAVE BEEN EXECUTED WITH PROPERTY OWNERS FOR THE REMOVAL OF EXISTING CONCRETE POLES.

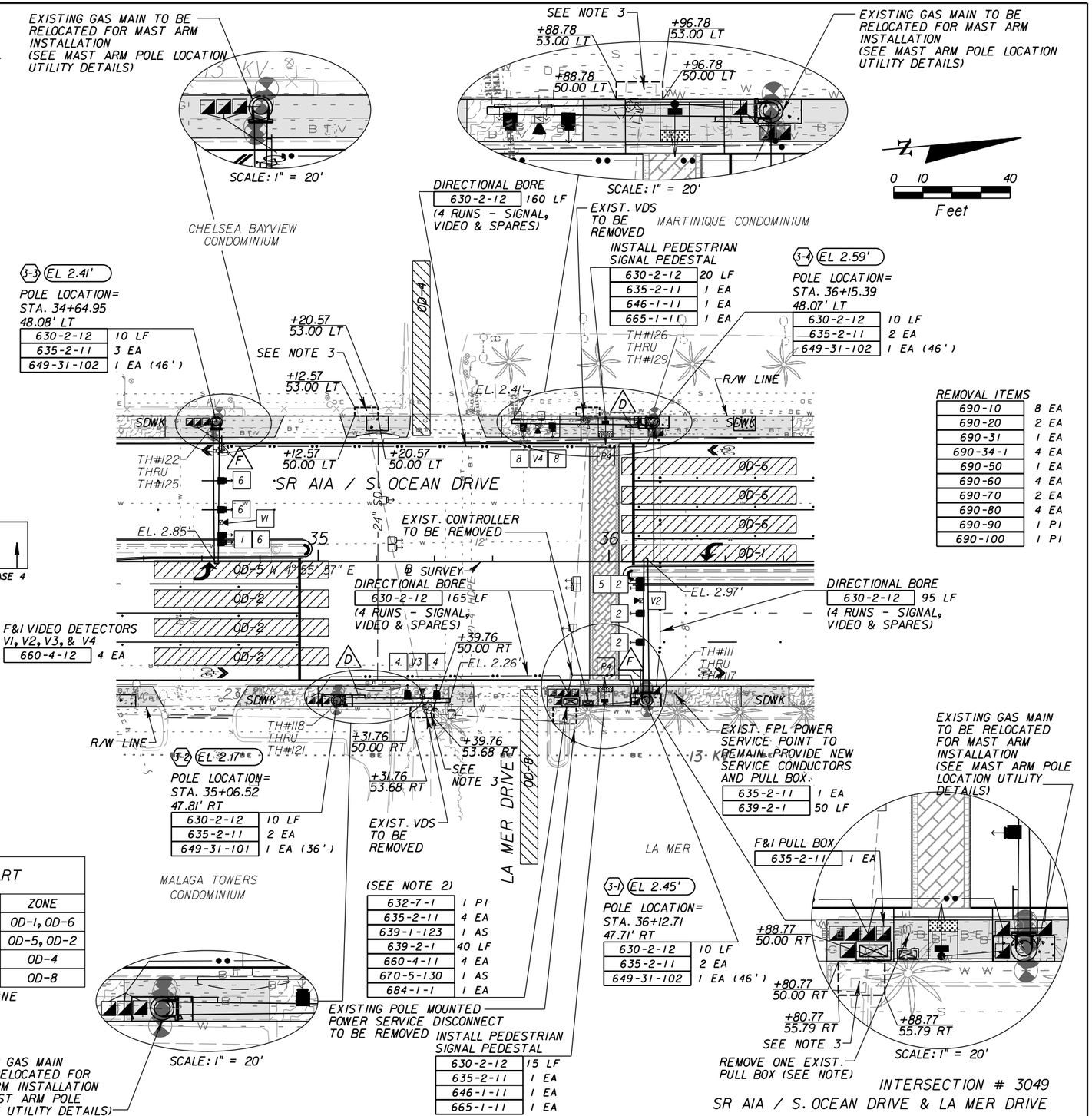

REMOVAL ITEMS

690-10	8 EA
690-20	2 EA
690-31	1 EA
690-34-1	4 EA
690-50	1 EA
690-60	4 EA
690-70	2 EA
690-80	4 EA
690-90	1 PI
690-100	1 PI

NOTICE: THE OFFICIAL RECORD OF THIS SHEET IS THE ELECTRONIC FILE SIGNED AND SEALED UNDER RULE 61G15, F.A.C.

REVISIONS			
DATE	DESCRIPTION	DATE	DESCRIPTION

F.R. Aleman & Associates Inc.
10305 N.W. 41 STREET
Suite 200
MIAMI FL 33178
Tel: (305) 591-8777
C.A. No. EB 4658
Amazia Kiboko, P.E. No. 49523

STATE OF FLORIDA
DEPARTMENT OF TRANSPORTATION

ROAD NO.	COUNTY	FINANCIAL PROJECT ID
A1A	BROWARD	428727-1-52-01

SIGNALIZATION PLAN

SHEET NO. T-8

EXISTING SIGNAL HEAD DETAILS

3-SECT., 1-WAY
5 EXISTING
(TO REMAIN)

EXISTING PEDESTRIAN HEAD DETAILS

PED. SIGNAL
COUNT-DOWN
1-SECT., 1-WAY
2 EXISTING
(TO REMAIN)

PEDESTRIAN DETECTOR SIGNS

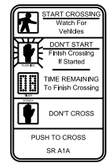

FTP-68B-06 (2 EA)

EXISTING SIGN DETAILS

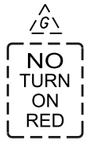

1 EXISTING
(TO REMAIN)

EXISTING CONTROLLER TIMINGS			
	CONTROLLER PHASE	1	2
	FACE NUMBER	2,6	XPED
	DIRECTION	N/S	E/W
TIMING FUNCTION	INITIAL GREEN (MIN)	7	10
	EXTENSION (GAP)	0.0	0.0
	MAXIMUM GREEN 1	55	41
	MAXIMUM GREEN 2		
	YELLOW CLEARANCE	4.0	3.0
	ALL RED CLEARANCE		
	PEDESTRIAN WALK	7	10
	PED. CLEARANCE		
	PHASE RECALL	MAX	OFF
	PERMISSIVE		
	FLASH OPERATION	Y	
	GREEN RETURN		

EXISTING SOP TO REMAIN

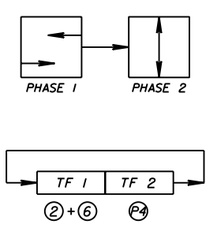

CONTROLLER OPERATIONS

1. MAJOR STREET: SR AIA / S. OCEAN DRIVE
   MINOR MOVEMENT: MIDBLOCK PEDESTRIAN CROSSING.
2. EXISTING SIGNAL OPERATION PLAN TO REMAIN. CONTROLLER TIMING IS EXISTING AND TO REMAIN AS SHOWN.
3. POSTED SPEED LIMIT IS 35 MPH FOR SR AIA / S. OCEAN DRIVE.

PLAN SHEET NOTES

1. FPL POWER SERVICE POINT FUSED INSIDE BROWARD COUNTY STREET LIGHT PULL BOX APPROXIMATELY 10' NW OF CABINET #3051 AT SR AIA / S. OCEAN DRIVE & HALLANDALE BEACH BLVD INTERSECTION ON THE SE CORNER.

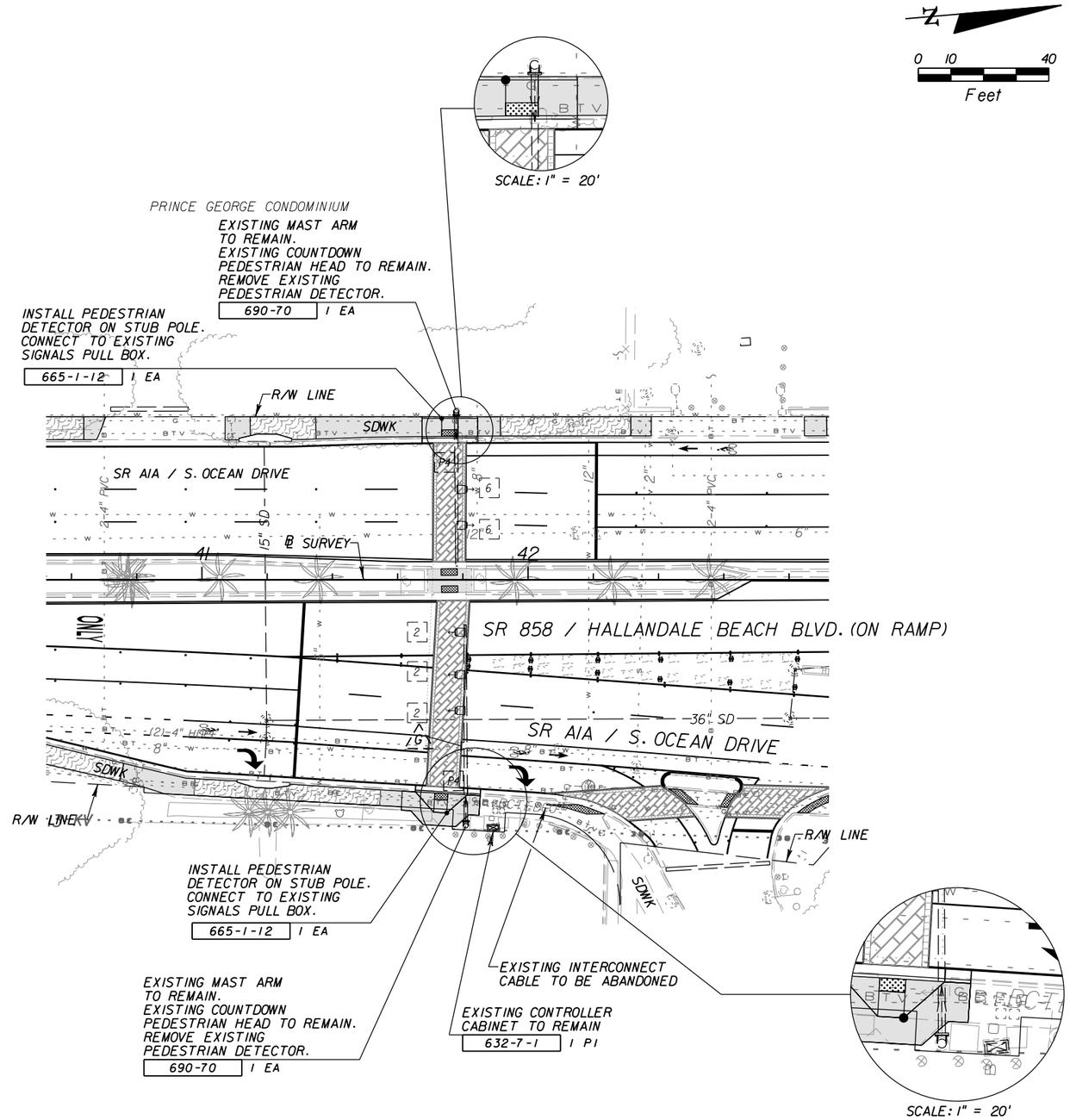

INTERSECTION # 3397
SR AIA / S. OCEAN DRIVE & 1865 MID BLOCK CROSSING

NOTICE: THE OFFICIAL RECORD OF THIS SHEET IS THE ELECTRONIC FILE SIGNED AND SEALED UNDER RULE 61G15, F.A.C.

REVISIONS			
DATE	DESCRIPTION	DATE	DESCRIPTION

F.R. Aleman & Associates Inc.
10305 N.W. 41 STREET
Suite 200
MIAMI FL 33178
Tel: (305) 591-8777
C.A. No. EB 4658
Amazia Kiboko, P.E. No. 49523

STATE OF FLORIDA
DEPARTMENT OF TRANSPORTATION

ROAD NO.	COUNTY	FINANCIAL PROJECT ID
A1A	BROWARD	428727-1-52-01

SIGNALIZATION PLAN

SHEET NO. T-9

EXISTING SIGNAL HEAD DETAILS

3-SECT., 1-WAY
3 EXISTING
(TO REMAIN)

3-SECT., 1-WAY
6 EXISTING
(TO REMAIN)

5-SECT., 1-WAY
1 EXISTING
(TO REMAIN)

EXISTING PEDESTRIAN HEAD DETAILS

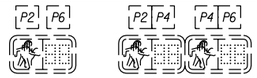

PED. SIGNAL
COUNT-DOWN
1-SECT., 1-WAY
2 EXISTING
(TO REMAIN)

PED. SIGNAL
COUNT-DOWN
1-SECT., 2-WAY
2 EXISTING
(TO REMAIN)

EXISTING PEDESTRIAN DETECTOR SIGNS

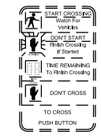

2 EXISTING
(TO BE REMOVED)

EXISTING SIGN DETAILS

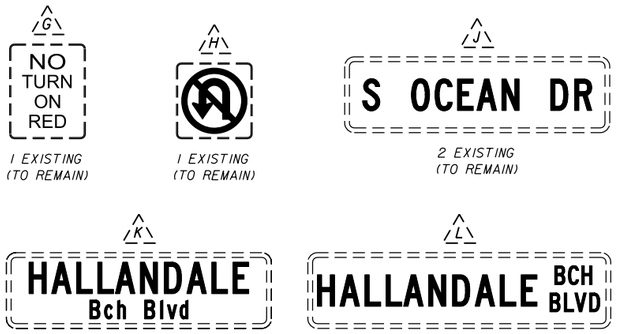

G: 1 EXISTING (TO REMAIN)

H: 1 EXISTING (TO REMAIN)

J: 2 EXISTING (TO REMAIN)

K: 1 EXISTING (TO REMAIN)

L: 1 EXISTING (TO REMAIN)

PEDESTRIAN DETECTOR SIGNS

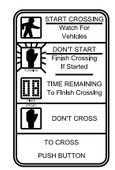

FTP-68B-06 (6 EA)

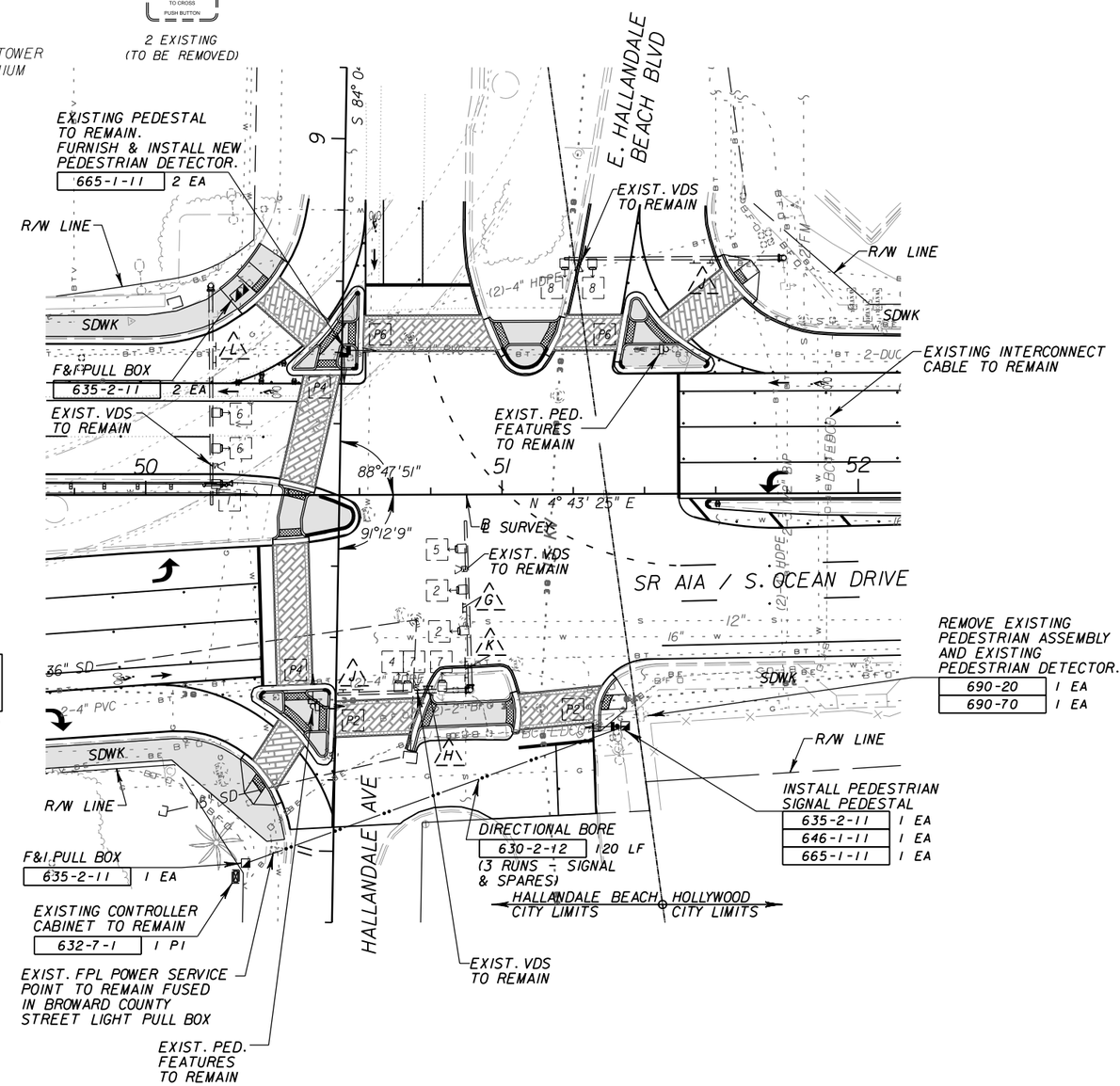

EXISTING CONTROLLER TIMINGS

CONTROLLER PHASE		1	2	3	4	5	6
FACE NUMBER		1	2	3,8	4,7	5	6
DIRECTION		SBL	NB	WB	EB	NBL	SB
TIMING FUNCTION	INITIAL GREEN (MIN)	5	7	15	6	5	7
	EXTENSION (GAP)	1.5	0.0	5.0	2.0	1.5	0.0
	MAXIMUM GREEN 1	15	50	25	35	15	50
	MAXIMUM GREEN 2						
	YELLOW CLEARANCE	4.0	4.0	4.0	4.0	4.0	4.0
	ALL RED CLEARANCE	1.5	1.0	2.0	2.0	1.5	1.0
	PEDESTRIAN WALK		7		7		7
	PED. CLEARANCE		30		26		30
	PHASE RECALL	OFF	MAX	OFF	OFF	OFF	MAX
	PERMISSIVE	NO				NO	
	FLASH OPERATION	R	Y	R	R	R	Y
	GREEN RETURN						

EXISTING SOP TO REMAIN

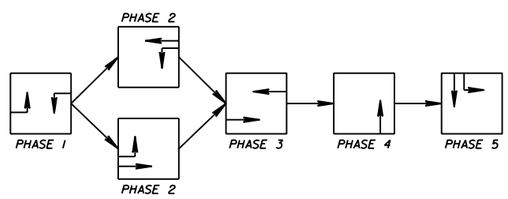

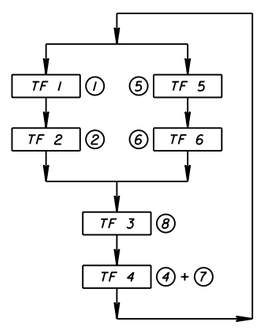

CONTROLLER OPERATIONS

1. MAJOR STREET: SR AIA / S. OCEAN DRIVE
   MINOR STREET: HALLANDALE BEACH BLVD
2. FLASHING OPERATION: SR AIA - YELLOW
   HALLANDALE BEACH BLVD - RED
3. EXISTING SIGNAL OPERATION PLAN TO REMAIN. CONTROLLER TIMING IS EXISTING AND TO REMAIN AS SHOWN.
4. POSTED SPEED LIMIT IS 35 MPH FOR SR AIA / S. OCEAN DRIVE AND 35 MPH FOR HALLANDALE BEACH BLVD.

INTERSECTION # 3051
SR AIA / S. OCEAN DRIVE & HALLANDALE BEACH BLVD

NOTICE: THE OFFICIAL RECORD OF THIS SHEET IS THE ELECTRONIC FILE SIGNED AND SEALED UNDER RULE 61G15, F.A.C.

REVISIONS			
DATE	DESCRIPTION	DATE	DESCRIPTION

F.R. Aleman & Associates Inc.
10305 N.W. 41 STREET
Suite 200
MIAMI FL 33178
Tel: (305) 591-8777
C.A. No. EB 4658
Amazia Kiboko, P.E. No. 49523

STATE OF FLORIDA
DEPARTMENT OF TRANSPORTATION

ROAD NO.	COUNTY	FINANCIAL PROJECT ID
AIA	BROWARD	428727-1-52-01

SIGNALIZATION PLAN

SHEET NO. T-10

emslerra 12/2/2013 7:36:59 PM H:\e\Projects\4287271520I\signals\PLANSG06.dgn

EXISTING SIGNAL HEAD DETAILS

3-SECT., 1-WAY
3 EXISTING
(TO REMAIN)

5-SECT., 1-WAY
1 EXISTING
(TO REMAIN)

EXISTING PEDESTRIAN HEAD DETAILS

PED. SIGNAL
COUNT-DOWN
1-SECT., 1-WAY
2 EXISTING
(TO REMAIN)

PEDESTRIAN DETECTOR SIGNS

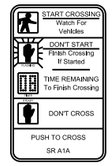

FTP-68B-06 (2 EA)

EXISTING CONTROLLER TIMINGS				
CONTROLLER PHASE		1	2	3	4
FACE NUMBER			2,6	P4,5	1,6
DIRECTION			N/S	XPED	SBL
TIMING FUNCTION	INITIAL GREEN (MIN)		7	7	4
	EXTENSION (GAP)		0.0	0.0	1.5
	MAXIMUM GREEN 1		50	27	10
	MAXIMUM GREEN 2				
	YELLOW CLEARANCE		4.0	4.0	4.0
	ALL RED CLEARANCE		1.0	1.0	1.0
	PEDESTRIAN WALK		7	7	
	PED. CLEARANCE			20	
	PHASE RECALL		MAX	OFF	OFF
	PERMISSIVE				5 SECT
	FLASH OPERATION		Y	(DARK)	
	GREEN RETURN				

EXISTING SOP TO REMAIN

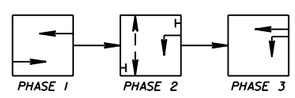

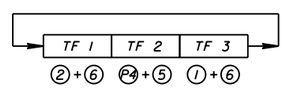

CONTROLLER OPERATIONS

1. MAJOR STREET: SR A1A / S. OCEAN DRIVE
   MINOR MOVEMENT: MIDBLOCK PEDESTRIAN CROSSING.
2. EXISTING SIGNAL OPERATION PLAN TO REMAIN. CONTROLLER TIMING IS EXISTING AND TO REMAIN AS SHOWN.
3. POSTED SPEED LIMIT IS 35 MPH FOR SR A1A / S. OCEAN DRIVE.

PLAN SHEET NOTES

1. REMOVE PULL BOXES FROM RAMP AREA. INSTALL NEW PULL BOXES OUTSIDE RAMP AREA. INTERCEPT CONDUITS AND RE-ROUTE CONDUITS AND CABLE TO NEW PULL BOXES. REPLACE CONDUCTORS AS REQUIRED. NO SPLICING ALLOWED.
2. SPAN WIRE CABLE TO BE TENSIONED IN ORDER TO MEET MAXIMUM SAG LIMITS AS WELL AS VERTICAL CLEARANCE.

VIDEO DETECTOR CHART		
DETECTOR NO.	MOVEMENTS	ZONE
V-1	1,6	OD-1, OD-6
V-2	2	OD-2

OD = OCCUPANCY DETECTOR ZONE

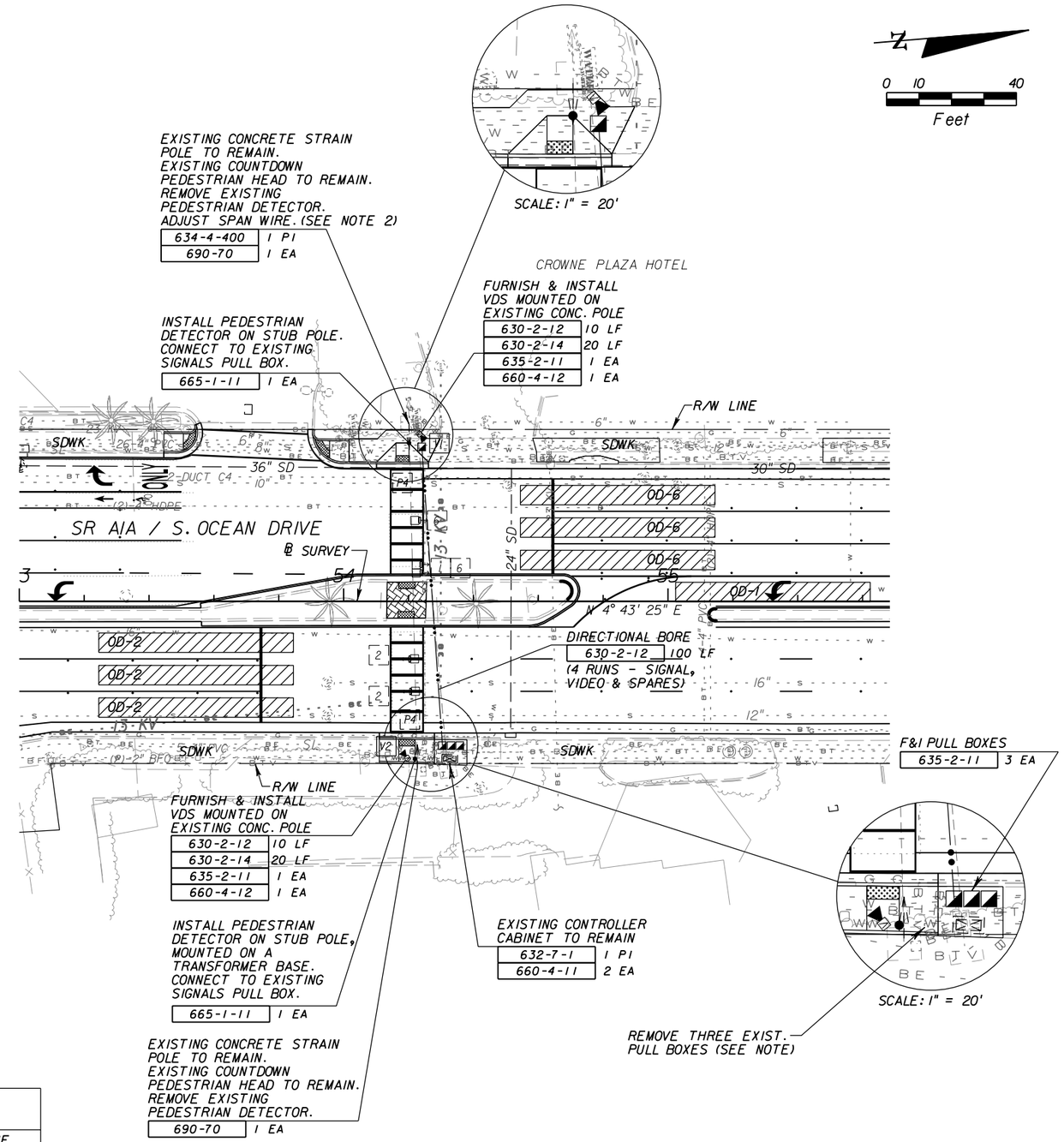

INTERSECTION # 3052
SR A1A / S. OCEAN DRIVE & CROWNE PLAZA MID BLOCK CROSSING

NOTICE: THE OFFICIAL RECORD OF THIS SHEET IS THE ELECTRONIC FILE SIGNED AND SEALED UNDER RULE 61G15, F.A.C.

REVISIONS			
DATE	DESCRIPTION	DATE	DESCRIPTION

F.R. Aleman & Associates Inc.
10305 N.W. 41 STREET
Suite 200
MIAMI FL 33178
Tel: (305) 591-8777
C.A. No. EB 4658
Amazia Kiboko, P.E. No. 49523

STATE OF FLORIDA
DEPARTMENT OF TRANSPORTATION

ROAD NO.	COUNTY	FINANCIAL PROJECT ID
A1A	BROWARD	428727-1-52-01

SIGNALIZATION PLAN

SHEET NO.
T-11

SPECIAL INSTRUCTIONS					
ID NO.	PED. BUTTON		PED. SIGNALS		HANDHOLE LOCATION

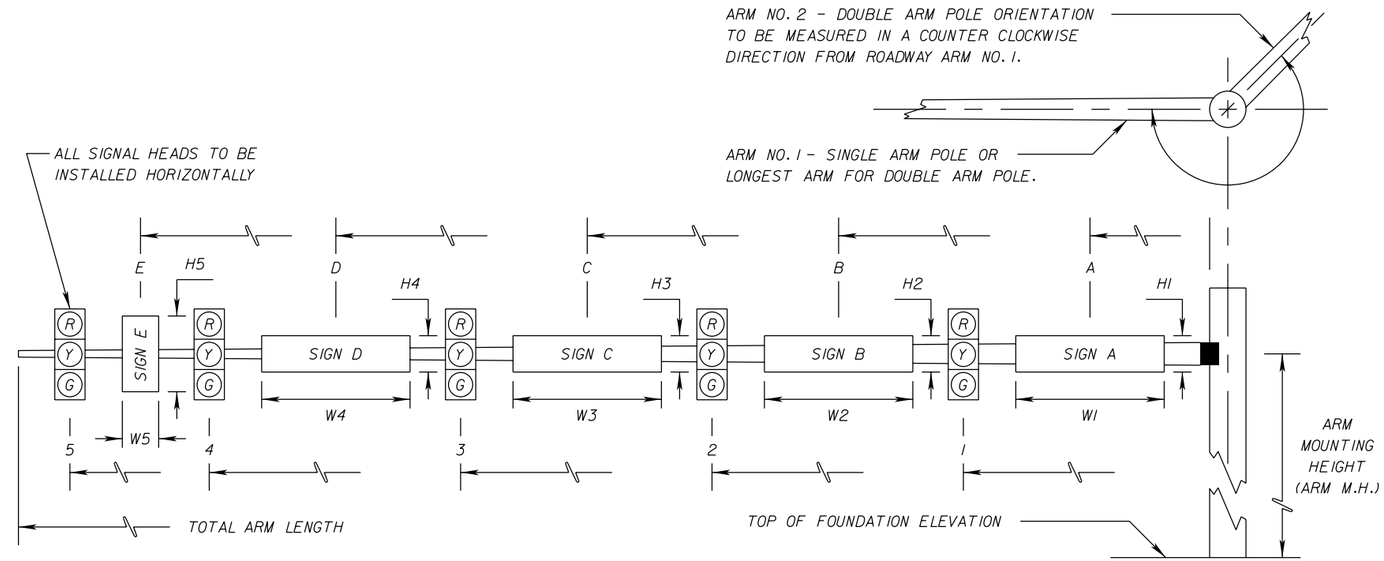

* DENOTES NUMBER OF SECTIONS IN SIGNAL HEAD ASSEMBLY

ID NO.	SHEET NO.	LOCATION BY STA.	TOP OF FOUNDATION ELEVATION	RDWY ARM NO.	CROWN ELEV.	SIGNAL DATA: SIGNAL V/H	BACK PLATES Y/N	PED. SIGNAL Y/N	DISTANCE FROM POLE: 1	*	2	*	3	*	4	*	5	*	TOTAL ARM LENGTH	ARM M.H.	∠ BETWEEN DUAL ARMS 90/270	SIGN DATA: DISTANCE FROM POLE / HEIGHT AND WIDTH OF SIGN: A	H1	W1	B	H2	W2	C	H3	W3	D	H4	W4	E	H5	W5	PAINT COLOR
1-1	T-5	10+78.85	2.76	1	3.18	H	Y	N	19.9	3	30.9	3	41.9	3					46	20		6	2	8														SOLAR BLACK
				2																																		
1-2	T-5	9+54.24	3.56	1	2.74	H	Y	N	25.7	3	35.7	3	45.7	3	55.7	3			60	20		5	2	6	50.55	2.5	3.5											SOLAR BLACK
				2																																		
1-3	T-5	9+52.36	3.19	1	3.20	H	Y	N	13.6	3	23.6	3	33.6	5					36	20		6	2	8														SOLAR BLACK
				2																																		
2-1	T-7	26+90.25	2.72	1	3.43	H	Y	N	17.5	3	27.5	3	37.5	5					46	20		5.5	2	7														SOLAR BLACK
				2																																		
2-2	T-7	25+90.14	2.51	1	2.33	H	Y	N	32.7	3	42.7	3							46	20		4.5	2	5														SOLAR BLACK
				2																																		
2-3	T-7	25+63.65	2.74	1	3.13	H	Y	N	17.5	3	27.5	3	37.5	5					46	20		5.5	2	7														SOLAR BLACK
				2																																		
3-1	T-8	36+12.71	2.45	1	2.97	H	Y	N	17.1	3	27.1	3	37.1	5					46	20		5	2	6														SOLAR BLACK
				2																																		
3-2	T-8	35+06.52	2.17	1	2.26	H	Y	N	21.5	3	31.5	3							36	20		4.5	2	5														SOLAR BLACK
				2																																		
3-3	T-8	34+64.95	2.41	1	2.85	H	Y	N	17.5	3	27.5	3	37.5	5					46	20		5	2	6														SOLAR BLACK
				2																																		
3-4	T-8	36+15.39	2.59	1	2.41	H	Y	N	32.0	3	42.0	3							46	20		4.5	2	5														SOLAR BLACK
				2																																		
				1																																		
				2																																		
				1																																		
				2																																		
				1																																		
				2																																		
				1																																		
				2																																		

REVISIONS			
DATE	DESCRIPTION	DATE	DESCRIPTION

F.R. Aleman & Associates Inc.
10305 N.W. 41 STREET
Suite 200
MIAMI FL 33178
Tel: (305) 591-8777
C.A. No. EB 4658
Amazia Kiboko, P.E. No. 49523

STATE OF FLORIDA
DEPARTMENT OF TRANSPORTATION

ROAD NO.	COUNTY	FINANCIAL PROJECT ID
A1A	BROWARD	428727-1-52-01

MAST ARM TABULATION

SHEET NO.
T-12

NOTICE: THE OFFICIAL RECORD OF THIS SHEET IS THE ELECTRONIC FILE SIGNED AND SEALED UNDER RULE 61G15-23.003, F.A.C.

STANDARD MAST ARM ASSEMBLIES DATA TABLE

Table Date 01-01-12

STRUCTURE ID NUMBERS	ASSEMBLY NUMBERS (1)	FIRST ARM			SECOND ARM			UF (deg)	LL (deg)	POLE				SPECIAL DRILLED SHAFT (4)					
		ARM TYPE	FAA(2) (FT.)	FBA(2) (IN.)	ARM TYPE	FAA(2) (FT.)	FBA(2) (IN.)			POLE TYPE	UAA(3) (FT.)	UB (FT.)	UCA(3) (IN.)	DA (FT.)	DB (FT.)	RA	RB	RC	RD (IN.)
1-1	D3-S2	D3	-	-	-	-	-	-	-	S2	22	20	14.95	SEE TABLE NOTE 5					
1-2	D5-S3	D5	-	-	-	-	-	-	-	S3	22	20	17.11	21	4.5	11	15	10	12
1-3	D1-S1	D1	-	-	-	-	-	-	-	S1	22	20	14.95	21	4.5	11	15	10	12
2-1	D3-S2	D3	-	-	-	-	-	-	-	S2	23	21	14.81	SEE TABLE NOTE 5					
2-2	D3-S2	D3	31	9.62	-	-	-	-	-	S2	22	20	14.95	SEE TABLE NOTE 5					
2-3	D3-S2	D3	-	-	-	-	-	-	-	S2	23	21	14.81	SEE TABLE NOTE 5					
3-1	D3-S2	D3	31	9.62	-	-	-	-	-	S2	23	21	14.81	SEE TABLE NOTE 5					
3-2	D1-S1	D1	31	9.62	-	-	-	-	-	S1	22	20	14.95	SEE TABLE NOTE 5					
3-3	D3-S2	D3	-	-	-	-	-	-	-	S2	23	21	14.81	21	4.5	11	15	10	12
3-4	D3-S2	D3	31	9.62	-	-	-	-	-	S2	22	20	14.95	SEE TABLE NOTE 5					

TABLE NOTES:

1. ASSEMBLY NUMBER LEGEND

   SINGLE ARM:
   ARM TYPE - POLE TYPE = D# - S#

   DOUBLE ARM:
   FIRST ARM TYPE - SECOND ARM TYPE - POLE TYPE = D# - D# - S#
   = E# - E# - T#

2. IF AN ENTRY APPEARS IN COLUMNS "FAA" AND "FBA", A SHORTER ARM IS REQUIRED, THIS IS OBTAINED BY REMOVING LENGTH FROM THE ARM TIP. FOR THESE CASES THE MAST ARM LENGTH SHALL BE SHORTENED FROM "FA" TO "FAA" AND THE TIP DIAMETER SHALL BE INCREASED FROM "FB" TO "FBA".

3. IF AN ENTRY APPEARS IN COLUMNS "UAA" AND "UCA", A SHORTER POLE IS REQUIRED. THIS IS OBTAINED BY REMOVING LENGTH FROM THE POLE TIP. FOR THESE CASES THE POLE HEIGHT SHALL BE SHORTENED FROM "UA" TO "UAA" AND THE POLE TIP DIAMETER SHALL BE INCREASED FROM "UC" TO "UCA".

4. THE FOUNDATION DESIGN SOIL CRITERIA:
   PER PSI INDUSTRIES GEOTECHNICAL REPORT DATED SEPTEMBER 12, 2013.
   SIGNED AND SEALED BY: DHURUVA BADRI, P.E. (P.E. No. 68718)

5. SPECIAL FOUNDATION REQUIRED:
   FOR MAST ARMS 1-1, 2-1, 3-1, 3-2, SEE SHEET T-27.
   FOR MAST ARM 2-2, SEE SHEET T-26
   FOR MAST ARM 2-3 & 3-4, SEE SHEET T-28.

GENERAL NOTES:

1. WORK THIS SHEET WITH THE SIGNAL DESIGNER'S "MAST ARM TABULATION". SEE "MAST ARM TABULATION" FOR SPECIAL INSTRUCTIONS THAT INCLUDE NON-STANDARD HANDHOLE LOCATION, PAINT COLOR, TERMINAL COMPARTMENT REQUIREMENT, AND PEDESTRIAN FEATURES.

2. WORK WITH INDEX NOS. 17743 AND 17745, UNLESS NOTED OTHERWISE IN THESE PLANS.

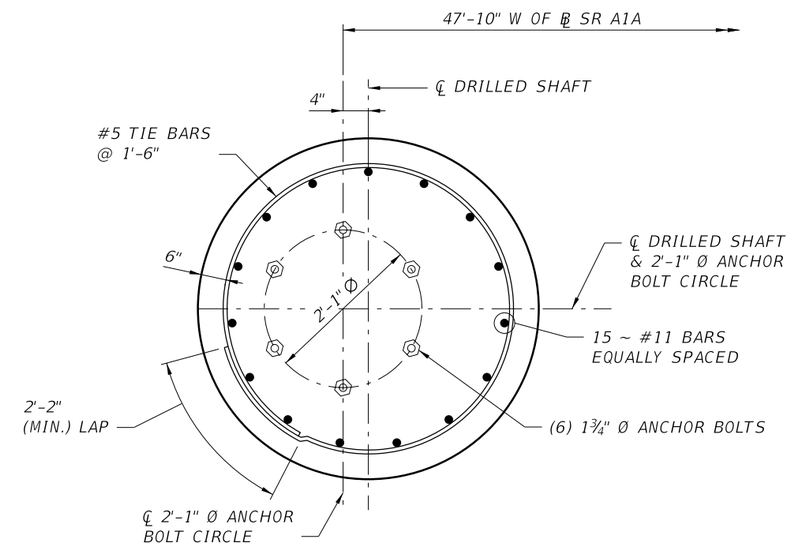

FOUNDATION PLAN
FOR MAST ARM 3-3
54" DIAMETER - DRILLED SHAFT

Designed By : JCF 09-13
Checked By : REF 09-13

Drawn By : JCF 09-13
Checked By : REF 09-13

NOTICE: THE OFFICIAL RECORD OF THIS SHEET IS THE ELECTRONIC FILE SIGNED AND SEALED UNDER RULE 61G15-23.003, F.A.C.

REVISIONS			
DATE	DESCRIPTION	DATE	DESCRIPTION

BCC Engineering, Inc.
Robert Forand, PE
P.E. License No. 58611
4901 NW 17th Way, Suite 506 Fort Lauderdale, FL 33309
Phone: (954) 928-1828 Fax: (954) 928-1551
Certificate of Authorization No. 7184

STATE OF FLORIDA
DEPARTMENT OF TRANSPORTATION

ROAD NO.	COUNTY	FINANCIAL PROJECT ID
AIA	BROWARD	428727-1-52-01

STANDARD MAST ARM ASSEMBLIES DATA TABLE

SHEET NO. T-13

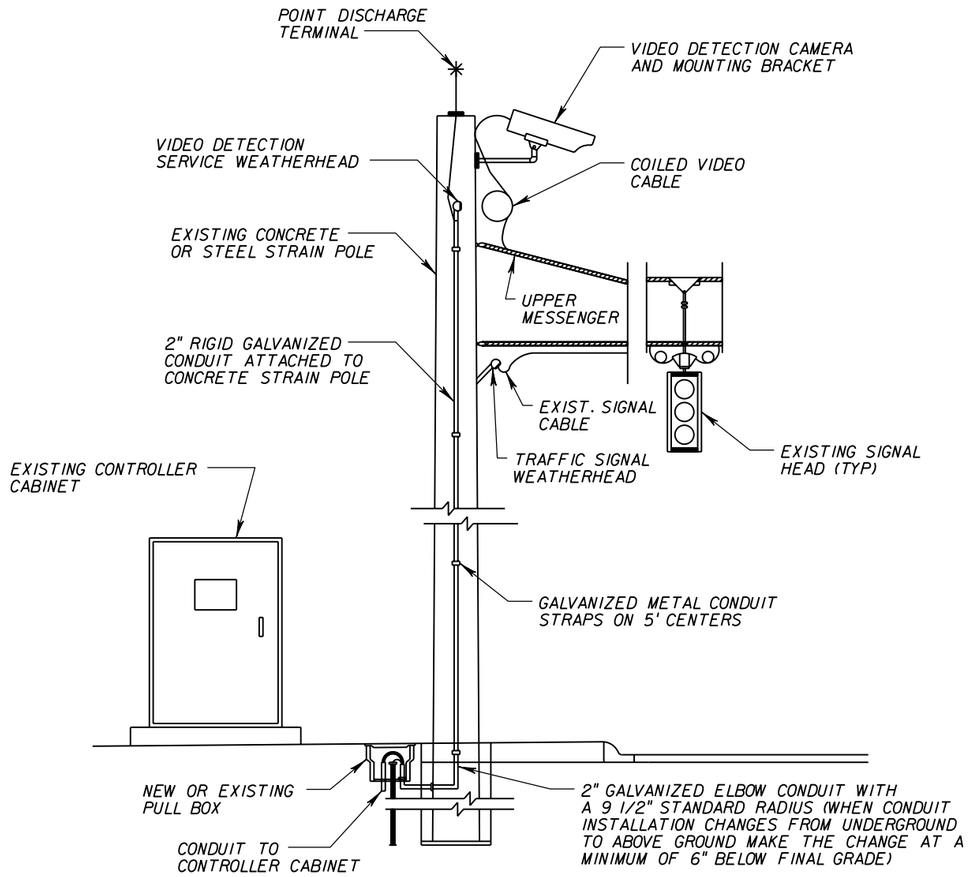

VIDEO DETECTOR
ON STRAIN POLE INSTALLATION DETAIL
(N.T.S.)

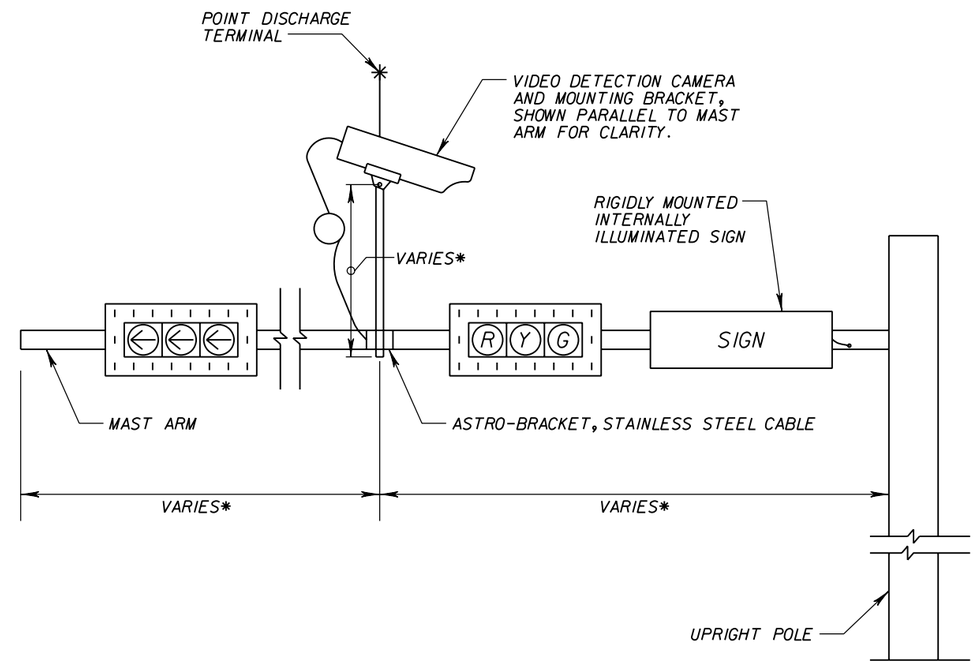

VIDEO DETECTOR & INTERNALLY ILLUMINATED STREET
NAME SIGN ON MAST ARM INSTALLATION DETAIL
(N.T.S.)

NOTES:

1. THE CONTRACTOR SHALL MAKE THE VIDEO DETECTION SYSTEM OPERATIONAL IMMEDIATELY UPON INSTALLATION, REMOVING THE ASSOCIATED MINOR MOVEMENTS FROM RECALL.
2. ALL OSHA CLEARANCE REQUIREMENTS FOR MAINTAINING SAFE DISTANCES TO OVERHEAD ELECTRIC FACILITIES WHILE PERFORMING CAMERA MAINTENANCE SHALL BE ACHIEVED BY CORRECT CAMERA PLACEMENT. CAMERAS SHALL ALSO BE LOCATED AND ANGLED IN RELATION TO THE RISING AND SETTING SUN TO BEST AVOID "SUNBURST" AND "WHITEOUT" EFFECTS DEMONSTRATED ON WET ROADWAYS.
3. ALL EXTERIOR VIDEO CABLE FITTINGS SHALL HAVE A WATER AND WEATHER-PROOF BOOT.
4. ALL VIDEO DETECTION EQUIPMENT SHALL MEET BROWARD COUNTY'S PAY ITEM NOTE #660-4-11 SPECIFICATIONS POSTED ON BROWARD COUNTY TRAFFIC ENGINEERING DIVISION WEBSITE, LOCATED AT WWW.BROWARD.ORG/TRAFFIC.
5. THE CONTRACTOR SHALL INSTALL ILLUMINATED STREET NAME SIGNS AT ALL SIGNALIZED INTERSECTIONS SHOWN ON PLANS AS DETAILED IN THIS DRAWING AND WITH ALL APPLICABLE STANDARDS.
6. INTERNALLY ILLUMINATED STREET NAME SIGNS SHALL BE RIGID MOUNTED, SINGLE SIDED WITH BACKLIT LED LIGHT OUTPUT OF 50 LUMENS PER WATT, MINIMUM.

* DISTANCE VARIES, CAMERA MOUNTED IN OPTIONAL DETECTION LOCATION OF APPROACH, SUBJECT TO NOTE #4.

NOTICE: THE OFFICIAL RECORD OF THIS SHEET IS THE ELECTRONIC FILE SIGNED AND SEALED UNDER RULE 61G15-23.003, F.A.C.

REVISIONS			
DATE	DESCRIPTION	DATE	DESCRIPTION

F.R. Aleman & Associates Inc.
10305 N.W. 41 STREET
Suite 200
MIAMI FL 33178
Tel: (305) 591-8777
C.A. No. EB 4658
Amazia Kiboko, P.E. No. 49523

STATE OF FLORIDA
DEPARTMENT OF TRANSPORTATION

ROAD NO.	COUNTY	FINANCIAL PROJECT ID
A1A	BROWARD	428727-1-52-01

VIDEO DETECTOR & IISS DETAILS

SHEET NO.
T-14

MAST ARM POLE 1-1

STA. 10+78.85, 48.08'RT

UPRIGHT TYPE - S2
BASEPLATE DIA- 32"

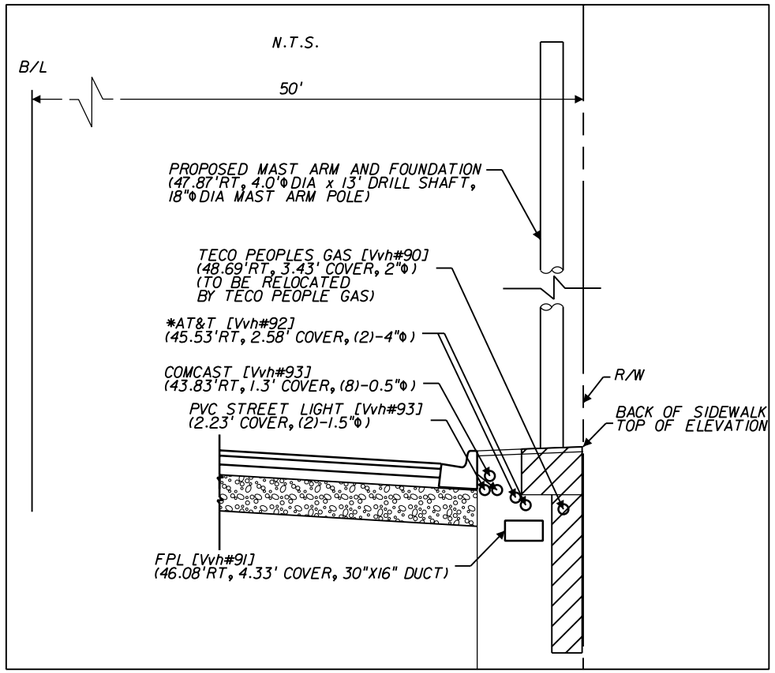

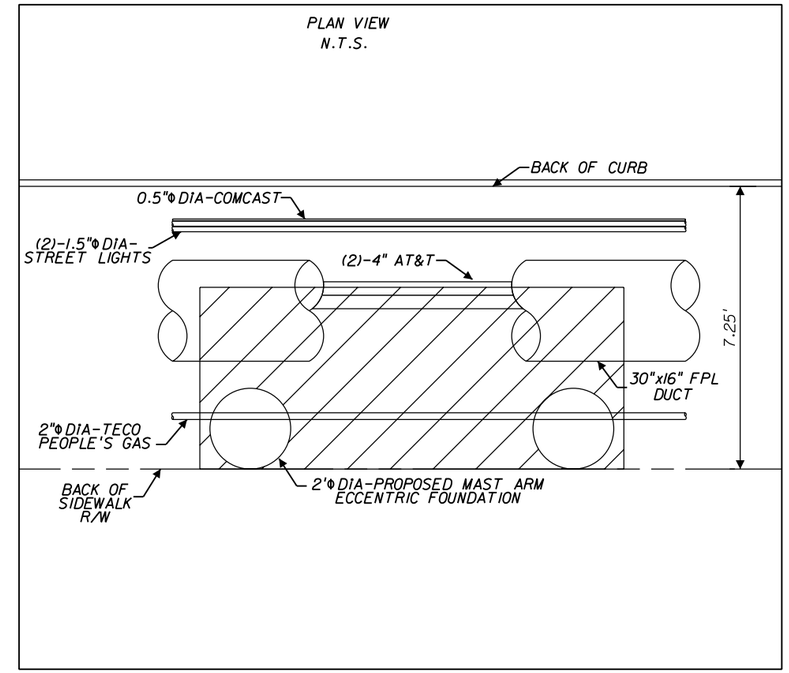

NOTES:

1) UTILITY CONFLICT- GAS LINE TO BE RELOCATED

2) CONTRACTOR SHALL BE RESPONSIBLE FOR VERIFYING AND/OR CONFIRMING UTILITY LOCATIONS PRIOR TO EXCAVATION.

3) REFER TO UTLITY ADJUSTMENT SCHEDULE FOR MORE INFORMATION

4) UTILITY COMPANY SHALL BE RESPONSIBLE FOR RELOCATING UTILITIES UPON NOTIFICATION FROM THE DEPARTMENT BASED ON THE ULITITY RELOCATION SCHEDULE FOR THIS PROJECT.

* DETAILS ARE NOT TO SCALE*
TO BE USED FOR CLARITY PURPOSES ONLY

MAST ARM POLE 1-2

STA. 9+54.24, 37.75'RT

UPRIGHT TYPE - S3
BASEPLATE DIA- 37"

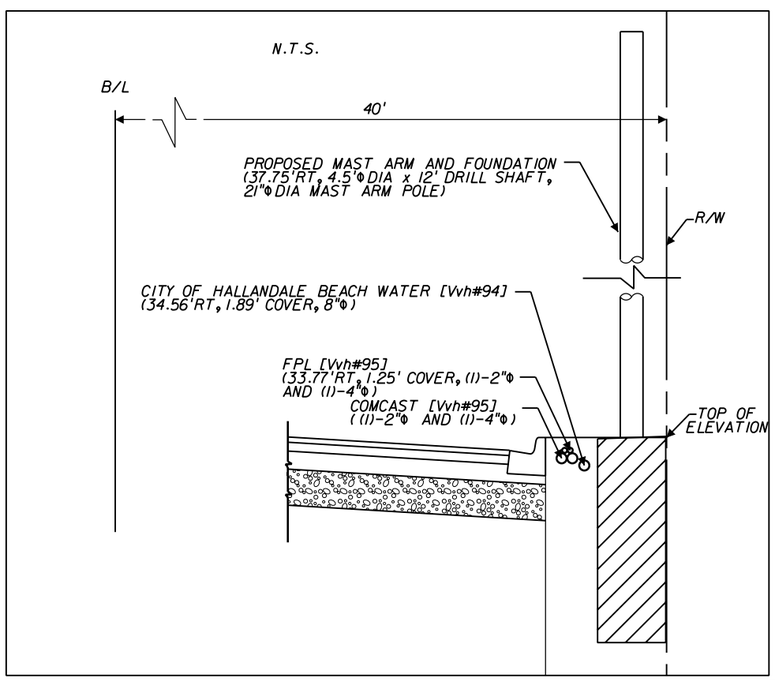

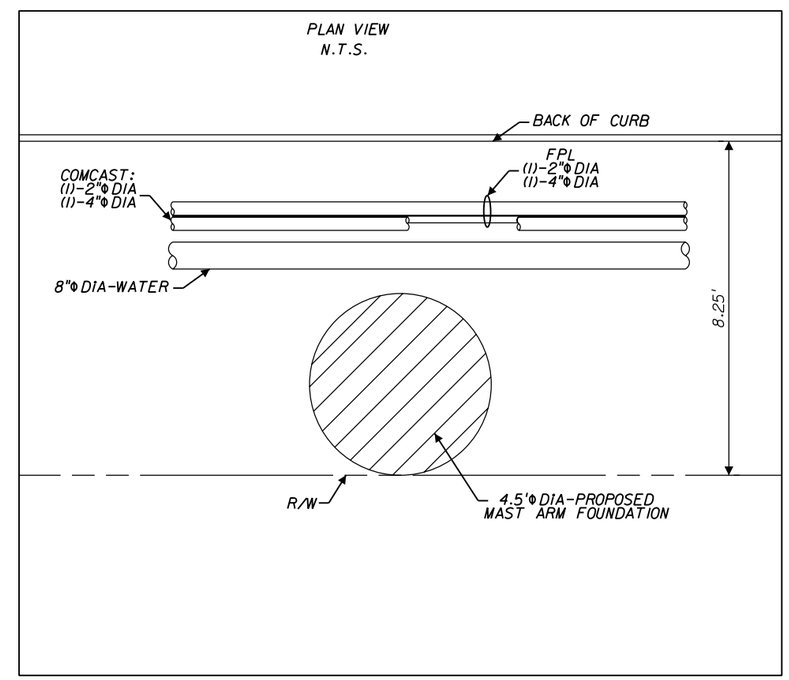

NOTE:

1) CONTRACTOR SHALL BE RESPONSIBLE FOR VERIFYING AND/OR CONFIRMING UTILITY LOCATIONS PRIOR TO EXCAVATION.

2) UTILITY COMPANY SHALL BE RESPONSIBLE FOR RELOCATING UTILITIES UPON NOTIFICATION FROM THE DEPARTMENT BASED ON THE ULITITY RELOCATION SCHEDULE FOR THIS PROJECT.

DETAILS ARE NOT TO SCALE
TO BE USED FOR CLARITY PURPOSES ONLY

REVISIONS			
DATE	DESCRIPTION	DATE	DESCRIPTION

F.R. Aleman & Associates Inc.
10305 N.W. 41 STREET
Suite 200
MIAMI FL 33178
Tel: (305) 591-8777
C.A. No. EB 4658
Amazia Kiboko, P.E. No. 49523

STATE OF FLORIDA
DEPARTMENT OF TRANSPORTATION

ROAD NO.	COUNTY	FINANCIAL PROJECT ID
A1A	BROWARD	428727-1-52-01

MAST ARM POLE LOCATION UTILITY DETAILS

SHEET NO.
T-15

NOTICE: THE OFFICIAL RECORD OF THIS SHEET IS THE ELECTRONIC FILE SIGNED AND SEALED UNDER RULE 61G15-23.003, F.A.C.

MAST ARM POLE 1-3

STA. 9+52.36, 38.00'LT

UPRIGHT TYPE - S2
BASEPLATE DIA - 32"

NOTES:

1) UTILITY CONFLICT-
GAS LINE AND WATER TO BE RELOCATED

2) CONTRACTOR SHALL BE RESPONSIBLE FOR VERIFYING AND/OR CONFIRMING UTILITY LOCATIONS PRIOR TO EXCAVATION.

3) UTILITY COMPANY SHALL BE RESPONSIBLE FOR RELOCATING UTILITIES UPON NOTIFICATION FROM THE DEPARTMENT BASED ON THE ULITITY RELOCATION SCHEDULE FOR THIS PROJECT.

4) REFER TO UTILITY ADJUSTMENT SCHEDULE FOR MORE INFORMATION.

DETAILS ARE NOT TO SCALE
TO BE USED FOR CLARITY PURPOSES ONLY

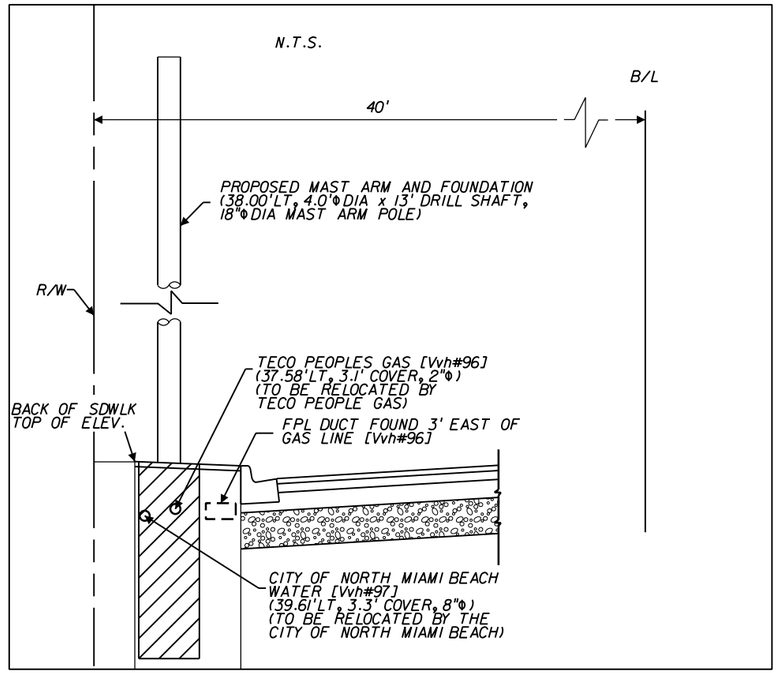

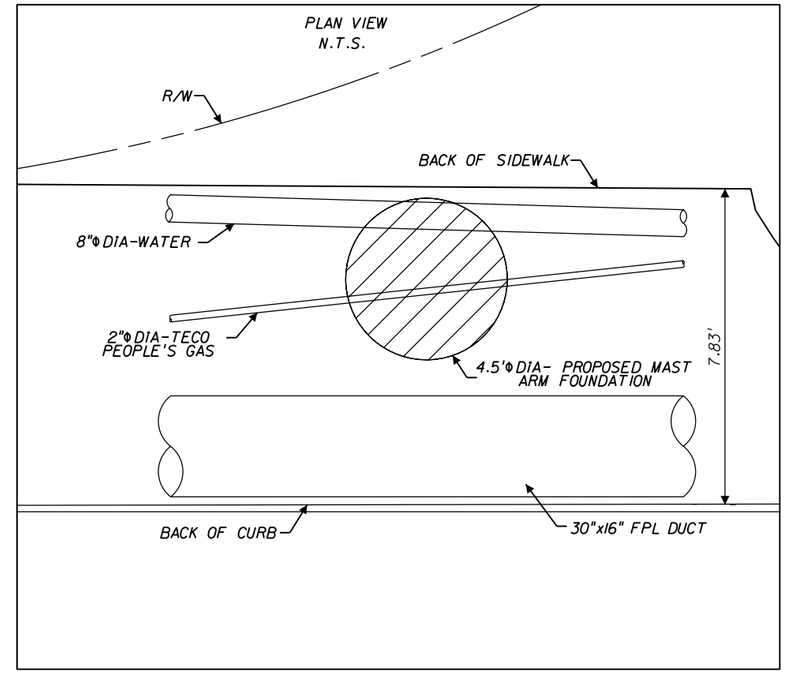

MAST ARM POLE 2-1

STA. 26+90.25, 48.08'RT

UPRIGHT TYPE - S2
BASEPLATE DIA - 32"

NOTES:

1) UTILITY CONFLICT-
GAS LINE TO BE RELOCATED

2) CONTRACTOR SHALL BE RESPONSIBLE FOR VERIFYING AND/OR CONFIRMING UTILITY LOCATIONS PRIOR TO EXCAVATION.

3) REFER TO UTILITY ADJUSTMENT SCHEDULE FOR MORE INFORMATION.

4) UTILITY COMPANY SHALL BE RESPONSIBLE FOR RELOCATING UTILITIES UPON NOTIFICATION FROM THE DEPARTMENT BASED ON THE ULITITY RELOCATION SCHEDULE FOR THIS PROJECT.

DETAILS ARE NOT TO SCALE
TO BE USED FOR CLARITY PURPOSES ONLY

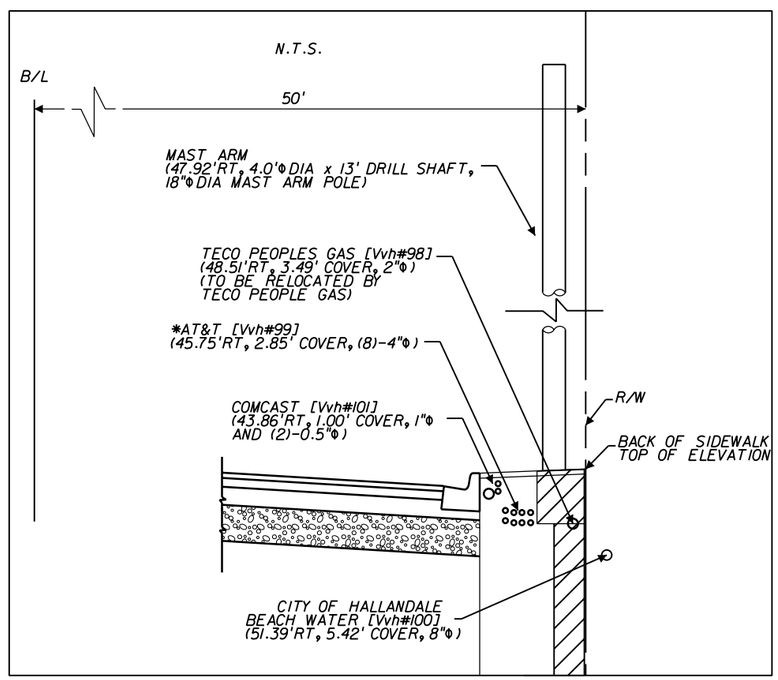

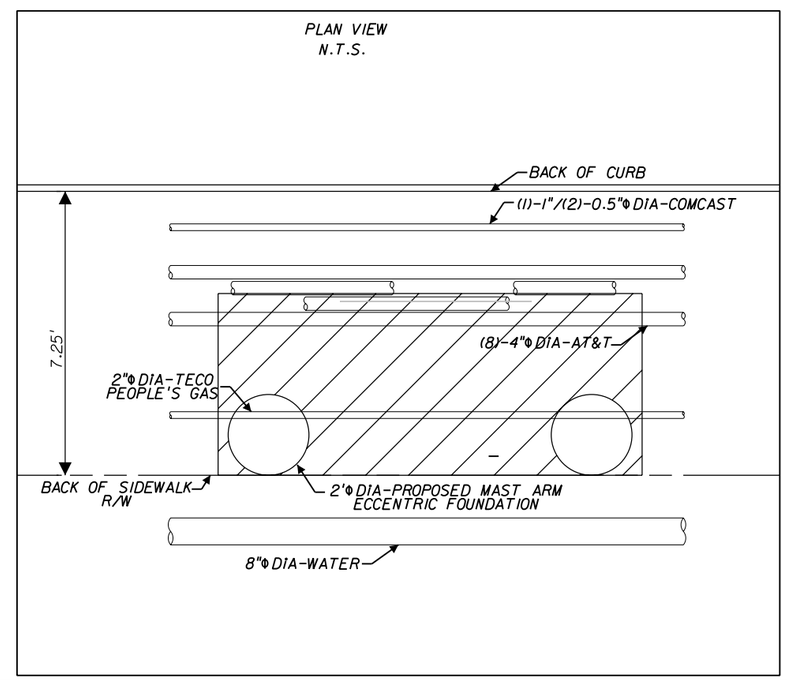

REVISIONS			
DATE	DESCRIPTION	DATE	DESCRIPTION

F.R. Aleman & Associates Inc.
10305 N.W. 41 STREET
Suite 200
MIAMI FL 33178
Tel: (305) 591-8777
C.A. No. EB 4658
Amazia Kiboko, P.E. No. 49523

STATE OF FLORIDA
DEPARTMENT OF TRANSPORTATION

ROAD NO.	COUNTY	FINANCIAL PROJECT ID
AIA	BROWARD	428727-1-52-01

MAST ARM POLE LOCATION UTILITY DETAILS

SHEET NO.
T-16

emslerra 12/2/2013 7:37:04 PM H:\e\Projects\4287271520l\signals\SSDTSG02.dgn

NOTICE: THE OFFICIAL RECORD OF THIS SHEET IS THE ELECTRONIC FILE SIGNED AND SEALED UNDER RULE 61G15-23.003, F.A.C.

MAST ARM POLE 2-2

STA. 25+90.14, 47.97'RT

UPRIGHT TYPE - S2
BASEPLATE DIA- 32"

NOTES:

1) UTILITY CONFLICT-
GAS AND WATER LINE TO BE RELOCATED

2) CONTRACTOR SHALL BE RESPONSIBLE FOR VERIFYING AND/OR CONFIRMING UTILITY LOCATIONS PRIOR TO EXCAVATION.

3) AT&T MAY REMAIN IF SPREAD FOOTER IS TO BE USED.

4) UTILITY COMPANY SHALL BE RESPONSIBLE FOR RELOCATING UTILITIES UPON NOTIFICATION FROM THE DEPARTMENT BASED ON THE ULITITY RELOCATION SCHEDULE FOR THIS PROJECT.

DETAILS ARE NOT TO SCALE
TO BE USED FOR CLARITY PURPOSES ONLY

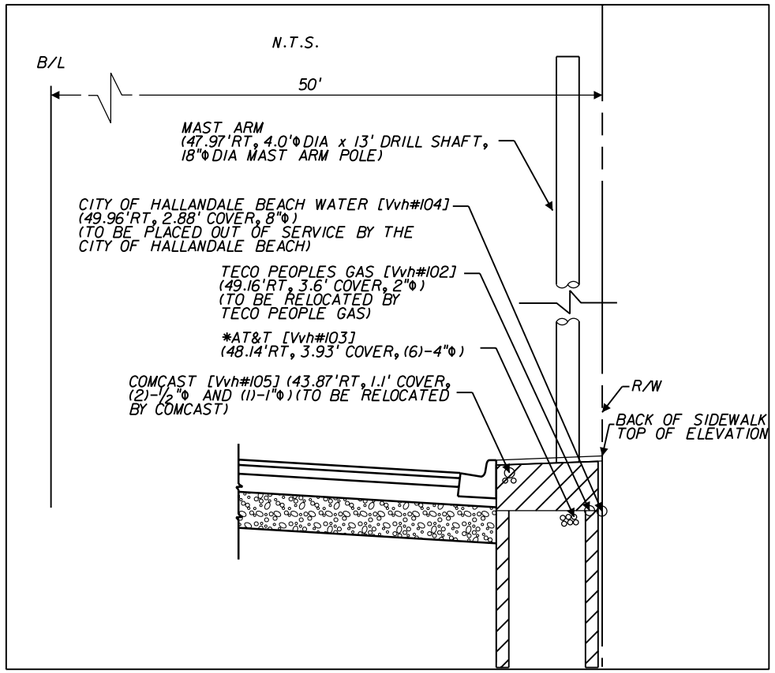

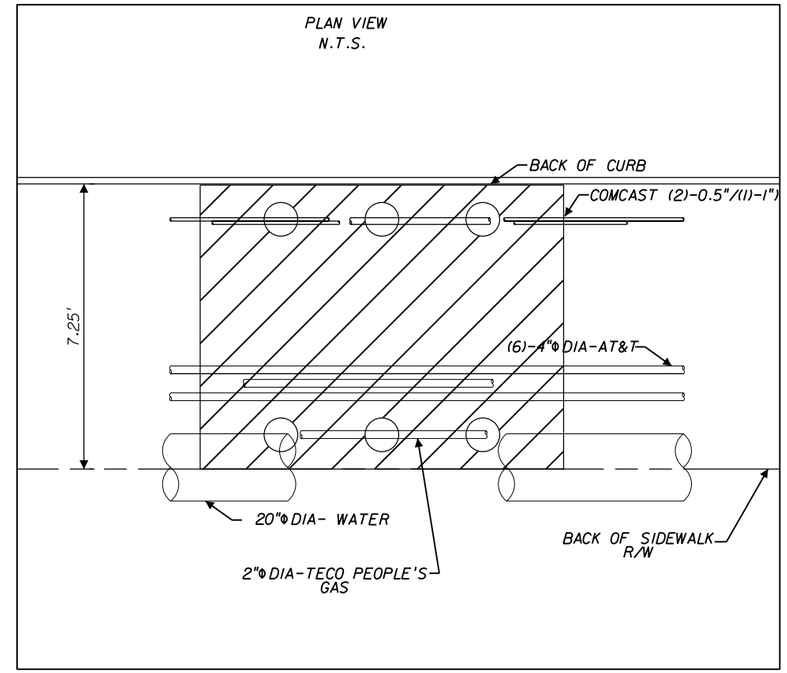

MAST ARM POLE 2-3

STA. 25+63.65, 48.08'LT

UPRIGHT TYPE - S2
BASEPLATE DIA- 32"

NOTES:

1) CONTRACTOR SHALL BE RESPONSIBLE FOR VERIFYING AND/OR CONFIRMING UTILITY LOCATIONS PRIOR TO EXCAVATION.

2) UTILITY COMPANY SHALL BE RESPONSIBLE FOR RELOCATING UTILITIES UPON NOTIFICATION FROM THE DEPARTMENT BASED ON THE ULITITY RELOCATION SCHEDULE FOR THIS PROJECT.

DETAILS ARE NOT TO SCALE
TO BE USED FOR CLARITY PURPOSES ONLY

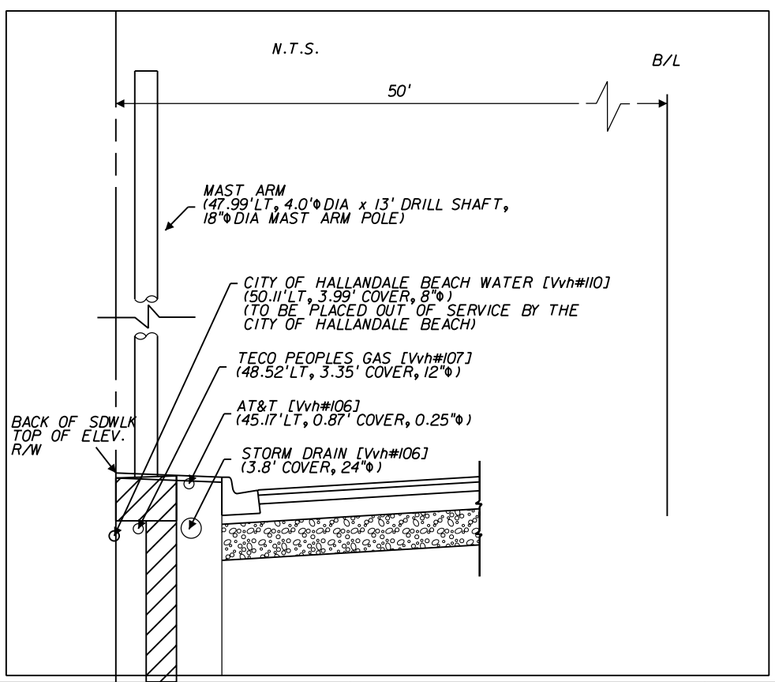

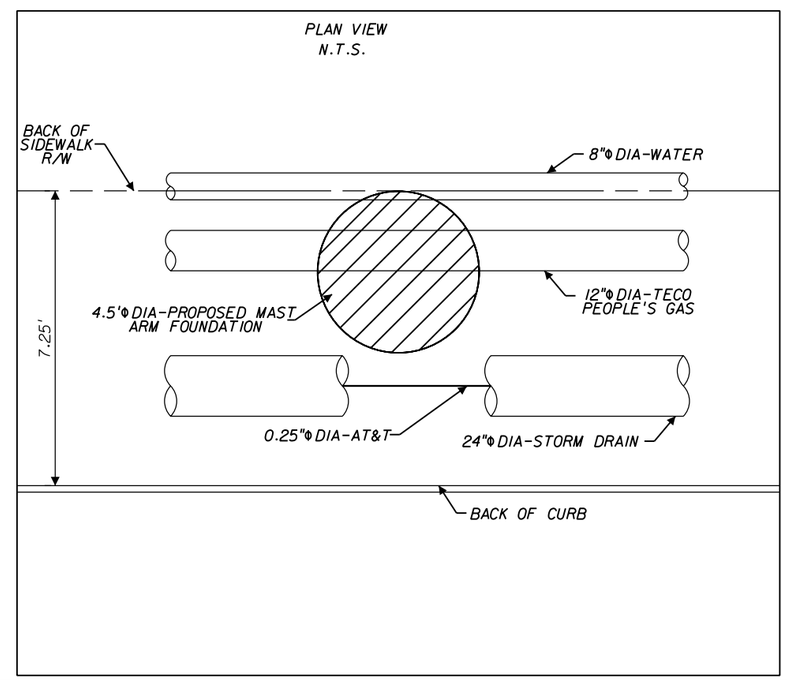

REVISIONS			
DATE	DESCRIPTION	DATE	DESCRIPTION

F.R. Aleman & Associates Inc.
10305 N.W. 41 STREET
Suite 200
MIAMI FL 33178
Tel: (305) 591-8777
C.A. No. EB 4658
Amazia Kiboko, P.E. No. 49523

STATE OF FLORIDA
DEPARTMENT OF TRANSPORTATION

ROAD NO.	COUNTY	FINANCIAL PROJECT ID
A1A	BROWARD	428727-1-52-01

MAST ARM POLE LOCATION UTILITY DETAILS

SHEET NO.
T-17

NOTICE: THE OFFICIAL RECORD OF THIS SHEET IS THE ELECTRONIC FILE SIGNED AND SEALED UNDER RULE 61G15-23.003, F.A.C.

MAST ARM POLE 3-1

STA. 36+12.71, 47.71'RT

UPRIGHT TYPE - S2
BASEPLATE DIA- 32"

NOTES:

1) UTILITY CONFLICT-
GAS, TO BE RELOCATED

2) CONTRACTOR SHALL BE RESPONSIBLE FOR VERIFYING AND/OR CONFIRMING UTILITY LOCATIONS PRIOR TO EXCAVATION.

3) REFER TO UTILITY ADJUSTMENT SCHEDULE FOR MORE INFORMATION.

4) UTILITY COMPANY SHALL BE RESPONSIBLE FOR RELOCATING UTILITIES UPON NOTIFICATION FROM THE DEPARTMENT BASED ON THE ULITITY RELOCATION SCHEDULE FOR THIS PROJECT.

DETAILS ARE NOT TO SCALE
TO BE USED FOR CLARITY PURPOSES ONLY

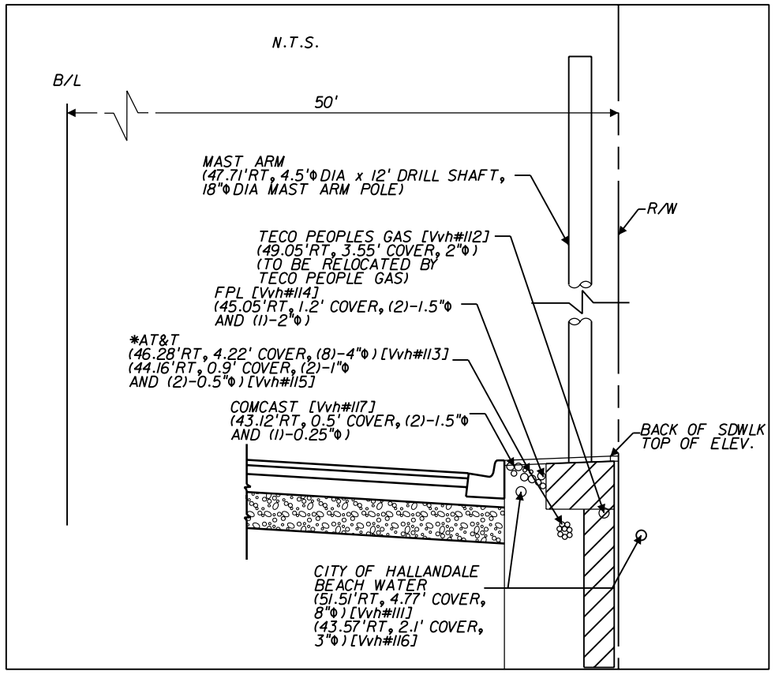

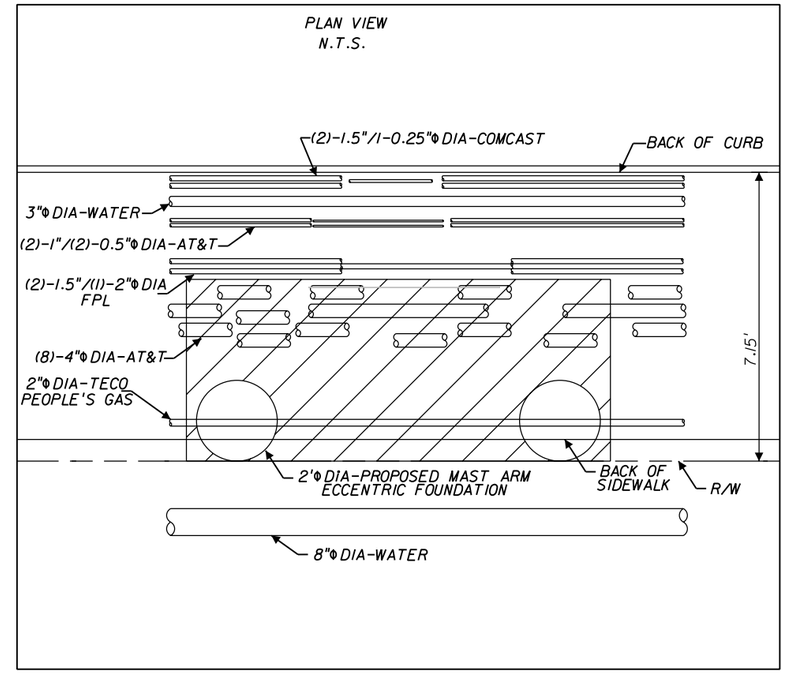

MAST ARM POLE 3-2

STA. 35+06.52, 47.81'RT

UPRIGHT TYPE - S1
BASEPLATE DIA- 30"

NOTES:

1) CONTRACTOR SHALL BE RESPONSIBLE FOR VERIFYING AND/OR CONFIRMING UTILITY LOCATIONS PRIOR TO EXCAVATION.

2) REFER TO UTILITY ADJUSTMENT SCHEDULE FOR MORE INFORMATION.

3) UTILITY COMPANY SHALL BE RESPONSIBLE FOR RELOCATING UTILITIES UPON NOTIFICATION FROM THE DEPARTMENT BASED ON THE ULITITY RELOCATION SCHEDULE FOR THIS PROJECT.

DETAILS ARE NOT TO SCALE
TO BE USED FOR CLARITY PURPOSES ONLY

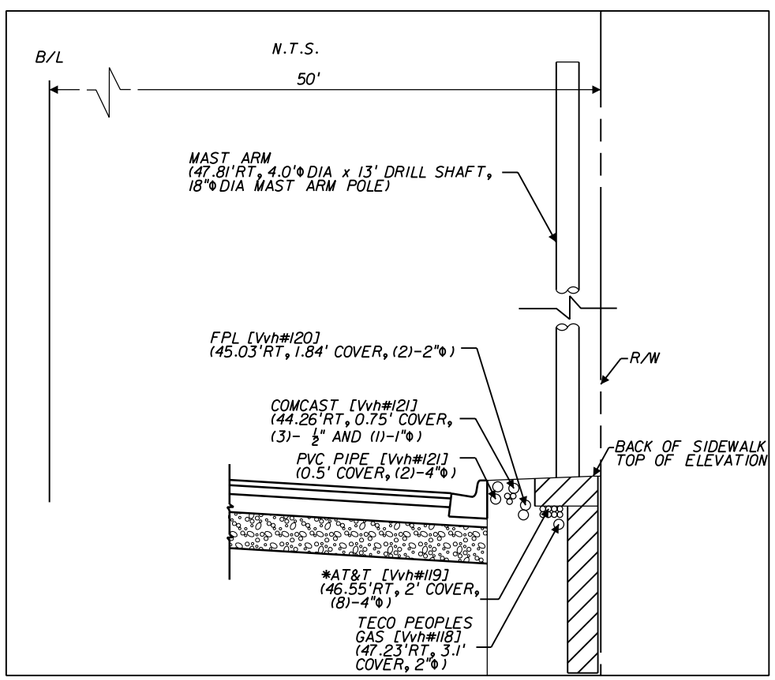

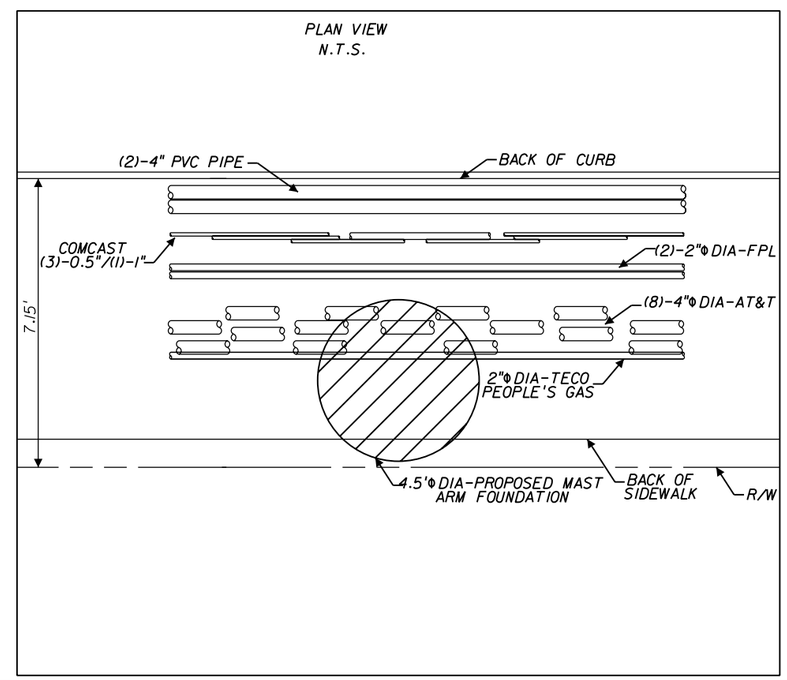

REVISIONS			
DATE	DESCRIPTION	DATE	DESCRIPTION

F.R. Aleman & Associates Inc.
10305 N.W. 41 STREET
Suite 200
MIAMI FL 33178
Tel: (305) 591-8777
C.A. No. EB 4658
Amazia Kiboko, P.E. No. 49523

STATE OF FLORIDA
DEPARTMENT OF TRANSPORTATION

ROAD NO.	COUNTY	FINANCIAL PROJECT ID
A1A	BROWARD	428727-1-52-01

MAST ARM POLE LOCATION UTILITY DETAILS

SHEET NO.
T-18

NOTICE: THE OFFICIAL RECORD OF THIS SHEET IS THE ELECTRONIC FILE SIGNED AND SEALED UNDER RULE 61G15-23.003, F.A.C.

MAST ARM POLE 3-3
STA. 34+64.95, 48.08'LT

UPRIGHT TYPE - S2
BASEPLATE DIA- 32"

NOTES:

1) UTILITY CONFLICT-
GAS LINE TO BE RELOCATED

2) CONTRACTOR SHALL BE RESPONSIBLE FOR VERIFYING AND/OR CONFIRMING UTILITY LOCATIONS PRIOR TO EXCAVATION.

3) UTILITY COMPANY SHALL BE RESPONSIBLE FOR RELOCATING UTILITIES UPON NOTIFICATION FROM THE DEPARTMENT BASED ON THE ULITITY RELOCATION SCHEDULE FOR THIS PROJECT.

4) REFER TO UTILITY ADJUSTMENT SCHEDULE FOR MORE INFORMATION.

DETAILS ARE NOT TO SCALE
TO BE USED FOR CLARITY PURPOSES ONLY

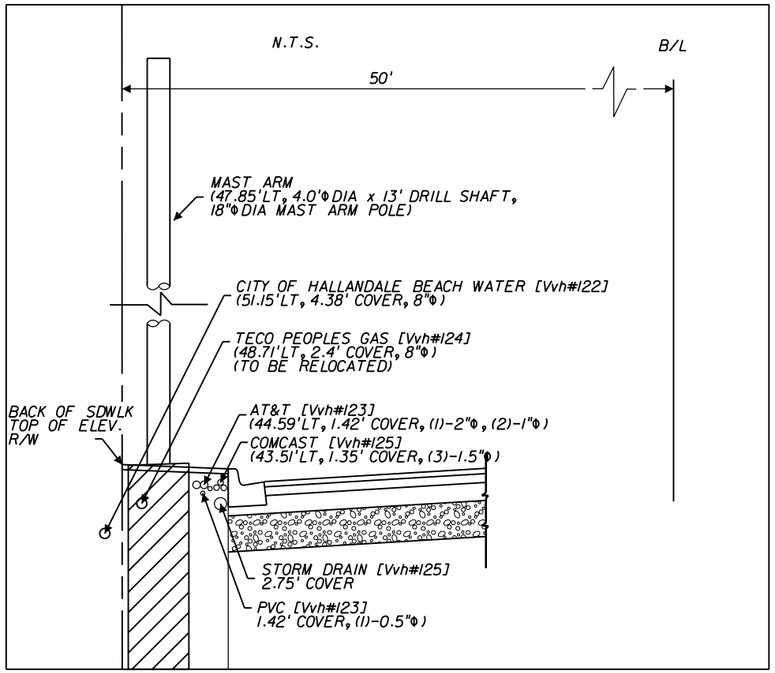

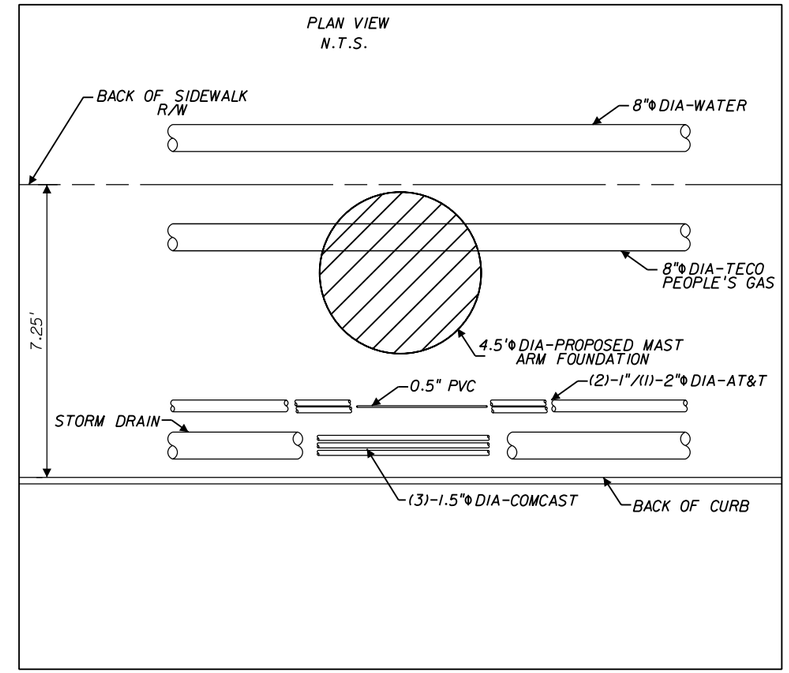

MAST ARM POLE 3-4
STA. 36+15.39, 48.07'LT

UPRIGHT TYPE - S2
BASEPLATE DIA- 32"

NOTES:

1) CONTRACTOR SHALL BE RESPONSIBLE FOR VERIFYING AND/OR CONFIRMING UTILITY LOCATIONS PRIOR TO EXCAVATION.

2) UTILITY COMPANY SHALL BE RESPONSIBLE FOR RELOCATING UTILITIES UPON NOTIFICATION FROM THE DEPARTMENT BASED ON THE ULITITY RELOCATION SCHEDULE FOR THIS PROJECT.

3) REFER TO UTILITY ADJUSTMENT SCHEDULE FOR MORE INFORMATION.

DETAILS ARE NOT TO SCALE
TO BE USED FOR CLARITY PURPOSES ONLY

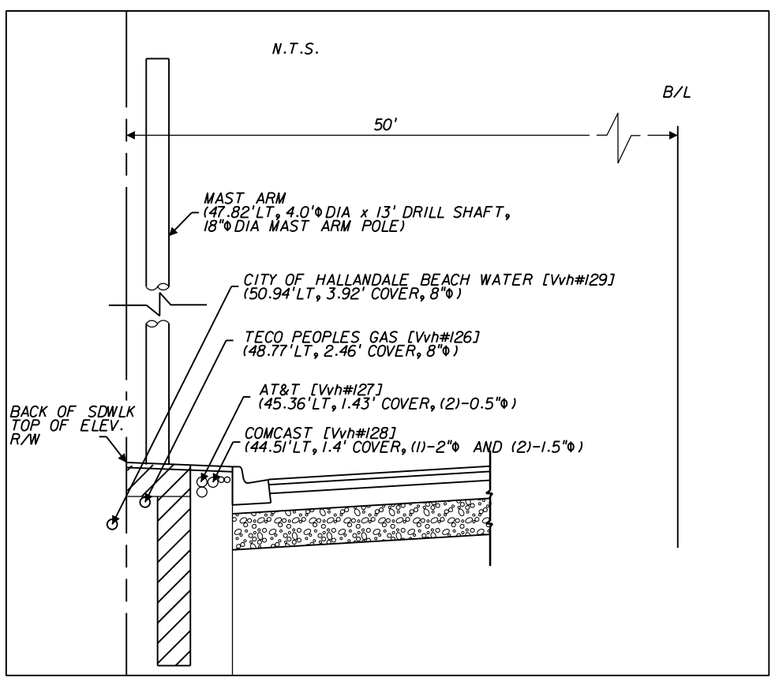

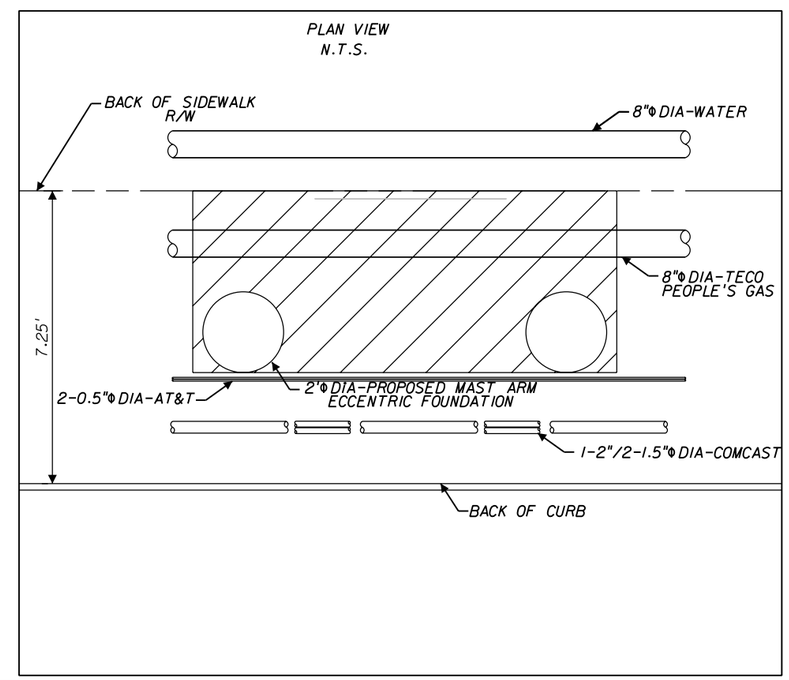

REVISIONS			
DATE	DESCRIPTION	DATE	DESCRIPTION

F.R. Aleman & Associates Inc.
10305 N.W. 41 STREET
Suite 200
MIAMI FL 33178
Tel: (305) 591-8777
C.A. No. EB 4658
Amazia Kiboko, P.E. No. 49523

STATE OF FLORIDA
DEPARTMENT OF TRANSPORTATION

ROAD NO.	COUNTY	FINANCIAL PROJECT ID
A1A	BROWARD	428727-1-52-01

MAST ARM POLE LOCATION UTILITY DETAILS

SHEET NO.
T-19

NOTICE: THE OFFICIAL RECORD OF THIS SHEET IS THE ELECTRONIC FILE SIGNED AND SEALED UNDER RULE 61G15-23.003, F.A.C.

SIGN NUMBER	A
QUANTITY	1
WIDTH	6'-0"
HEIGHT	2'-0"
BORDER WIDTH	1.25"
BORDER RADII	3"
BACKGROUND COLOR	GREEN
LEGEND & BORDER COLOR	WHITE
STATION(S)	NONE

COPY	S	R		A	I	A		L																	
SPACE	19.3	25.3	29.7	37.7	44.4	47.8		33.5																	
COPY	O	C	E	A	N		D	R	I	V	E		L												
SPACE	5.9	11.9	17.6	22.5	28.9	33.3	41.3	47.3	53.4	55.8	62.1		60.1												
COPY																									
SPACE																									
COPY																									
SPACE																									
COPY																									
SPACE																									

SIGN NUMBER	B
QUANTITY	1
WIDTH	8'-0"
HEIGHT	2'-0"
BORDER WIDTH	1.5"
BORDER RADII	3"
BACKGROUND COLOR	GREEN
LEGEND & BORDER COLOR	WHITE
STATION(S)	NONE

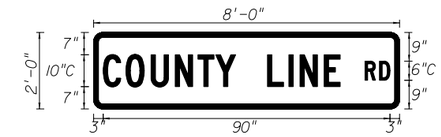

COPY	R	D		L																					
SPACE	85.2	89.7		7.8																					
COPY	C	O	U	N	T	Y		L	I	N	E		L												
SPACE	3	10.1	18	25.6	32.8	38.3	44.6	54.6	61.3	64.8	72.4		74.4												
COPY																									
SPACE																									
COPY																									
SPACE																									
COPY																									
SPACE																									

SIGN NUMBER	D
QUANTITY	2
WIDTH	5'-0"
HEIGHT	2'-0"
BORDER WIDTH	1.5"
BORDER RADII	3"
BACKGROUND COLOR	GREEN
LEGEND & BORDER COLOR	WHITE
STATION(S)	NONE

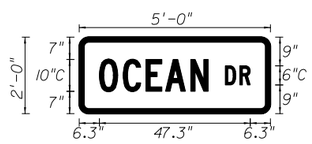

COPY	D	R		L																					
SPACE	45.8	50.4		7.8																					
COPY	O	C	E	A	N		L																		
SPACE	6.3	13.8	20.9	27.1	35		34.1																		
COPY																									
SPACE																									
COPY																									
SPACE																									
COPY																									
SPACE																									

SIGN NUMBER	E
QUANTITY	1
WIDTH	7'-0"
HEIGHT	2'-0"
BORDER WIDTH	1.5"
BORDER RADII	3"
BACKGROUND COLOR	GREEN
LEGEND & BORDER COLOR	WHITE
STATION(S)	NONE

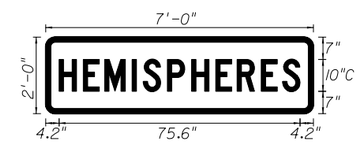

COPY	H	E	M	I	S	P	H	E	R	E	S		L												
SPACE	4.2	11.8	18.5	27.1	30.6	38.2	45.8	53.4	60.1	67.6	74.3		75.6												
COPY																									
SPACE																									
COPY																									
SPACE																									
COPY																									
SPACE																									
COPY																									
SPACE																									

NOTICE: THE OFFICIAL RECORD OF THIS SHEET IS THE ELECTRONIC FILE SIGNED AND SEALED UNDER RULE 61G15-23.003, F.A.C.

REVISIONS			
DATE	DESCRIPTION	DATE	DESCRIPTION

F.R. Aleman & Associates Inc.
10305 N.W. 41 STREET
Suite 200
MIAMI FL 33178
Tel: (305) 591-8777
C.A. No. EB 4658
Amazia Kiboko, P.E. No. 49523

STATE OF FLORIDA
DEPARTMENT OF TRANSPORTATION

ROAD NO.	COUNTY	FINANCIAL PROJECT ID
A1A	BROWARD	428727-1-52-01

GUIDE SIGN WORK SHEET

SHEET NO.
T-20

SIGN NUMBER	F
QUANTITY	1
WIDTH	6'-0"
HEIGHT	2'-0"
BORDER WIDTH	1.5"
BORDER RADII	3"
BACKGROUND COLOR	GREEN
LEGEND & BORDER COLOR	WHITE
STATION(S)	NONE

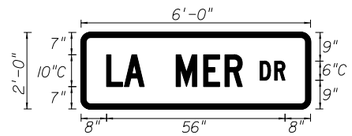

COPY	D	R		L																			
SPACE	56.2	60.7		7.8																			
COPY	L	A		M	E	R		L															
SPACE	8	13.6	19.8	29.8	38.4	45.1		42.6															
COPY																							
SPACE																							
COPY																							
SPACE																							
COPY																							
SPACE																							

SIGN NUMBER	
QUANTITY	
WIDTH	
HEIGHT	
BORDER WIDTH	
BORDER RADII	
BACKGROUND COLOR	
LEGEND & BORDER COLOR	
STATION(S)	

COPY																							
SPACE																							
COPY																							
SPACE																							
COPY																							
SPACE																							
COPY																							
SPACE																							
COPY																							
SPACE																							

SIGN NUMBER	
QUANTITY	
WIDTH	
HEIGHT	
BORDER WIDTH	
BORDER RADII	
BACKGROUND COLOR	
LEGEND & BORDER COLOR	
STATION(S)	

COPY																							
SPACE																							
COPY																							
SPACE																							
COPY																							
SPACE																							
COPY																							
SPACE																							
COPY																							
SPACE																							

COPY																							
SPACE																							
COPY																							
SPACE																							
COPY																							
SPACE																							
COPY																							
SPACE																							
COPY																							
SPACE																							

NOTICE: THE OFFICIAL RECORD OF THIS SHEET IS THE ELECTRONIC FILE SIGNED AND SEALED UNDER RULE 61G15-23.003, F.A.C.

REVISIONS			
DATE	DESCRIPTION	DATE	DESCRIPTION

F.R. Aleman & Associates Inc.
10305 N.W. 41 STREET
Suite 200
MIAMI FL 33178
Tel: (305) 591-8777
C.A. No. EB 4658
Amazia Kiboko, P.E. No. 49523

STATE OF FLORIDA
DEPARTMENT OF TRANSPORTATION

ROAD NO.	COUNTY	FINANCIAL PROJECT ID
A1A	BROWARD	428727-1-52-01

GUIDE SIGN WORK SHEET

SHEET NO.
T-21

STRUCTURAL GENERAL NOTES

GN.01. DESIGN SPECIFICATIONS:
A. FDOT STRUCTURES MANUAL DATED JANUARY 2013 AND SUBSEQUENT STRUCTURES DESIGN BULLETINS THERETO.
B. AMERICAN ASSOCIATION OF STATE HIGHWAY AND TRANSPORTATION OFFICIALS (AASHTO)LOAD AND RESISTANCE FACTOR (LRFD) BRIDGE DESIGN SPECIFICATIONS, [6TH] EDITION AND ALL SUBSEQUENT INTERIMS.
C. FDOT PLANS PREPARATION MANUAL DATED JULY, 2013.

GN.02. CONSTRUCTION SPECIFICATIONS:
A. FLORIDA DEPARTMENT OF TRANSPORTATION STANDARD SPECIFICATIONS FOR ROAD AND BRIDGE CONSTRUCTION, 2014 EDITION AND SUPPLEMENTS THERETO.

GN.03. DESIGN METHODOLOGY:
A. LOAD AND RESISTANCE FACTOR DESIGN (LRFD) METHOD (FOR STRUCTURAL DESIGN).
B. SERVICE LOADS (FOR GEOTECHNICAL DESIGN).

GN.04. DESIGN LOADING:
A. DEAD LOADS:
UNIT WEIGHT OF REINFORCED CONCRETE: 150 PCF
B. WIND LOADS ARE IN ACCORDANCE WITH THE STANDARD SPECIFICATIONS FOR STRUCTURAL SUPPORTS FOR HIGHWAY SIGNS, LUMINAIRES AND TRAFFIC SIGNALS (LTS-6), INCLUDING "FDOT MODIFICATIONS."

GN.05. DIMENSIONS:
A. ALL DIMENSIONS IN THESE PLANS ARE MEASURED EITHER HORIZONTALLY OR VERTICALLY UNLESS OTHERWISE NOTED.

GN.06. ENVIRONMENT:

EXTREMELY AGGRESSIVE
LOCATION - COASTAL

GN.07. MATERIALS:
A. CONCRETE:
B. REINFORCING STEEL:
ALL REINFORCING STEEL SHALL CONFORM TO ASTM A615, GRADE 60. ALL DIMENSIONS PERTAINING TO LOCATION OF REINFORCEMENT ARE TO CENTERLINE OF BARS EXCEPT WHERE THE CLEAR DIMENSION IS SHOWN TO THE FACE OF CONCRETE OR OTHER SURFACES
C. STEEL CASING:
MICROPILE STEEL CASING SHALL CONFORM TO ASTM A36 AT A MINIMUM.

CONCRETE CLASS	MINIMUM 28-DAY COMPRESSIVE STRENGTH (PSI)	LOCATION OF CONCRETE IN STRUCTURE
V	6500	CAST-IN-PLACE FOUNDATION CAPS
IV (DRILLED SHAFT)	4000	DRILLED SHAFTS
PORTLAND CEMENT GROUT	4500	MICROPILES

CONCRETE SHALL BE IN ACCORDANCE WITH FLORIDA DEPARTMENT OF TRANSPORTATION SPECIFICATION SECTION 346.

GN.8. ELEVATIONS:
A. ALL ELEVATIONS REFER TO NORTH AMERICAN VERTICAL DATUM (NAVD) OF 1988.

GN.9. CONCRETE COVER:
UNLESS NOTED OTHERWISE, CONCRETE COVER SHALL CONFORM TO THE FOLLOWING:

CAST-IN-PLACE FOUNDATIONS (CAST AGAINST EARTH)	4½"
CAST-IN-PLACE FOUNDATIONS (FORMED SURFACES)	4"
DRILLED SHAFTS	6"
MICROPILES	6"
INTERNAL SURFACES	3"

CONCRETE COVER DIMENSIONS SHOWN IN THE PLANS DO NOT INCLUDE PLACEMENT AND FABRICATION TOLERANCES UNLESS SHOWN AS "MINIMUM COVER". SEE SPECIFICATIONS FOR ALLOWABLE TOLERANCES.

GN.10. CONSTRUCTION JOINTS IN CONCRETE:
CONSTRUCTION JOINTS WILL BE PERMITTED ONLY AT LOCATIONS INDICATED ON PLANS. ADDITIONAL CONSTRUCTION JOINTS OR ALTERATIONS TO THOSE SHOWN SHALL REQUIRE WRITTEN APPROVAL OF THE ENGINEER.

GN.11. PHASING OF WORK:
WORK PHASING AND PROGRESSION OF WORK SHALL CONFORM TO THE TRAFFIC CONTROL PLANS LOCATED IN THE ROADWAY PLANS.

GN.12. UTILITIES:
A. UNDERGROUND UTILITIES SHOWN IN THE STRUCTURES PLANS ARE AT APPROXIMATE LOCATIONS. FOR ADDITIONAL INFORMATION, REFERENCE ROADWAY AND UTILITY PLANS.

B. SHALL BE IN ACCORDANCE WITH STANDARD SPECIFICATION 7-11.6.

GN. 13 PAY ITEM NOTES:
A. PAY ITEM 649-31-101 STEEL MAST ARM ASSEMBLY, F&I, (WIND SPEED-150 MPH) (SINGLE ARM,W/O LUMINAIRE) (36'). ALL COSTS ASSOCIATED WITH THE SPECIAL FOUNDATIONS FOR MAST ARM 1-3 AND 3-2, INCLUDING BUT NOT LIMITED TO MATERIALS, CONCRETE COLORING, LABOR, ETC. SHALL BE INCLUDED IN PAY ITEM NO. 649-31-101.
B. PAY ITEM 649-31-102 STEEL MAST ARM ASSEMBLY, F&I, (WIND SPEED-150 MPH) (SINGLE ARM,W/O LUMINAIRE) (46'). ALL COSTS ASSOCIATED WITH THE SPECIAL FOUNDATIONS FOR MAST ARMS 1-1, 2-1, 2-2, 2-3, 3-1, 3-3, AND 3-4, INCLUDING BUT NOT LIMITED TO MATERIALS,CONCRETE COLORING, LABOR, ETC. SHALL BE INCLUDED IN PAY ITEM NO. 649-31-102.
C. PAY ITEM 649-31-103 STEEL MAST ARM ASSEMBLY, F&I, (WIND SPEED-150 MPH) (SINGLE ARM,W/O LUMINAIRE) (60'). ALL COSTS ASSOCIATED WITH THE SPECIAL FOUNDATIONS FOR MAST ARM 1-2, INCLUDING BUT NOT LIMITED TO MATERIALS, CONCRETE COLORING, LABOR, ETC. SHALL BE INCLUDED IN PAY ITEM NO. 649-31-103.

LIST OF FREQUENTLY USED ABBREVIATIONS:

EF	EACH FACE	SDG	STRUCTURES DESIGN GUIDELINES
FF	FAR FACE	TBR	TO BE REMOVED
NF	NEAR FACE	UNO	UNLESS NOTED OTHERWISE
PME	PREMOULDED EXPANSION MATERIAL		

NOTE: SEE STANDARD INDEX 001 FOR ADDITIONAL ABBREVIATIONS.

GN. 14 CONCRETE COLOR:
TO COMPLY WITH THE CITY OF HALLANDALE BEACH HARDSCAPE REQUIREMENTS, ALL FOUNDATIONS SHALL UTILIZE INTEGRALLY COLORED CONCRETE. THE COLOR SHALL BE SCOFIELD CHROMIX#5130(SPRING BEIGE). AT A MINIMUM, THE VOLUME OF FOUNDATIONS ABOVE A POINT 6" BELOW THE FINISHED GROUND LINE OR FINISHED WALKING SURFACE, WHICHEVER APPLIES/GOVERNS,SHALL BE COLORED. HOWEVER, CONSTRUCTABILITY MAY REQUIRE THAT THIS ADMIXTURE BE USED FOR A VOLUME OF THE FOUNDATION THAT IS LARGER THAN THIS MINIMUM VOLUME REQUIRED. THE CONTRACTOR SHALL COMPLY WITH ALL ADMIXTURE MANUFACTURER RECOMMENDATIONS AND SPECIFICATIONS.

Designed By : JCF 09-13
Checked By : REF 09-13
Drawn By : JCF 09-13
Checked By : REF 09-13

NOTICE: THE OFFICIAL RECORD OF THIS SHEET IS THE ELECTRONIC FILE SIGNED AND SEALED UNDER RULE 61G15-23.003, F.A.C.

FOUNDATION NOTES

FN.01. CONSTRUCTION SPECIFICATIONS:

A. FURNISH AND INSTALL ALL FOUNDATIONS IN ACCORDANCE WITH STANDARD SPECIFICATIONS SECTION 455, STRUCTURES FOUNDATIONS. ALL SUPPLEMENTS THERETO, THE TECHNICAL SPECIAL PROVISIONS, AND THE PROVISIONS CONTAINED HEREIN.

FN.02. REFERENCES:

A. FOR STRUCTURAL GENERAL NOTES, REFERENCE SHEET NO. T-22.

FN.03. UTILITIES:

SHALL BE IN ACCORDANCE WITH SPECIFICATION 7-11.6.

FN.04. PROTECTION OF EXISTING STRUCTURES:

A. THE PLANS REQUIRE FOUNDATION CONSTRUCTION TO OCCUR IN CLOSE PROXIMITY TO EXISTING STRUCTURES, AND THE CONTRACTOR IS TO TAKE ALL REASONABLE PRECAUTIONS TO PREVENT DAMAGE TO SUCH STRUCTURES IN ACCORDANCE WITH THE PROVISIONS OF SECTION 455 OF THE STANDARD SPECIFICATIONS.

B. THE CONTRACTOR IS REQUIRED TO MONITOR EXISTING STRUCTURES FOR SETTLEMENT IN ACCORDANCE WITH THE PROVISIONS OF SECTION 455 OF THE STANDARD SPECIFICATIONS.

FN.05. FOUNDATION INSTALLATION:

A. MINIMUM TIP ELEVATION:

1. THE MINIMUM TIP ELEVATION SHOWN IN THE PLANS IS REQUIRED TO ACHIEVE LATERAL AND AXIAL STABILITY AS REQUIRED BY THE DESIGN.

FN.06. PHASING OF WORK:

A. FOR WORK PHASING AND PROGRESSION OF THE WORK, CONFORM WITH THE TRAFFIC CONTROL PLANS LOCATED IN THE ROADWAY PLANS.

MICROPILE NOTES:

MN.01. MICROPILES

ALL MICROPILES ARE 8" O.D. (INCLUDING ½" WALL THICKNESS PERMANENT STEEL CASING). REFER TO TECHNICAL SPECIAL PROVISIONS FOR MICROPILES.

MN.02. GROUT

GROUT SHALL HAVE A MINIMUM 28-DAY COMPRESSIVE STRENGTH OF 4500 PSI.

MN. 03. REINFORCING STEEL

REINFORCING STEEL SHALL BE ASTM A615 GRADE 60.

MN. 04 INSTALLATION

THE CONTRACTOR SHALL EXERCISE CARE DURING MICROPILE INSTALLATION TO AVOID DAMAGE TO ADJACENT EXISTING STRUCTURES AND UTILITIES IN CLOSE PROXIMITY TO THE MICROPILES.

Designed By : JCF 09-13
Checked By : REF 09-13

Drawn By : JCF 09-13
Checked By : REF 09-13

NOTICE: THE OFFICIAL RECORD OF THIS SHEET IS THE ELECTRONIC FILE SIGNED AND SEALED UNDER RULE 61G15-23.003, F.A.C.

REVISIONS			
DATE	DESCRIPTION	DATE	DESCRIPTION

BCC Engineering, Inc.
Robert Forand, PE
P.E. License No. 58611
4901 NW 17th Way, Suite 506 Fort Lauderdale, FL 33309
Phone: (954) 928-1828 Fax: (954) 928-1551
Certificate of Authorization No. 7184

STATE OF FLORIDA
DEPARTMENT OF TRANSPORTATION

ROAD NO.	COUNTY	FINANCIAL PROJECT ID
A1A	BROWARD	428727-1-52-01

FOUNDATION NOTES

SHEET NO.
T-23

MAST ARM MICROPILE FOUNDATION DATA TABLE							
INSTALLATION CRITERIA						DESIGN CRITERIA	
MAST ARM NO.	MICROPILE O.D. SIZE (IN.)	NOMINAL AXIAL RESISTANCE (TON)	CASING TIP ELEV. (FT.)	MIN. TIP ELEV (FT.)	MIN. BONDED LENGTH (FT.)	FACTORED DESIGN LOAD (KIP)	PILE CUTOFF ELEV.
2-2	8.0	20	-21	-24.4	3	16	-0.4

MAST ARM MICROPILE FOUNDATION QUANTITIES TABLE					
MAST ARM NO.	CLASS V CONCRETE (CY)	WT. REINF. (LBS.)	8" Ø MICROPILES (LF)	8" Ø PERMANENT STEEL CASING (LF)	PORTLAND CEMENT GROUT* (CY)
2-2	7.06	1781	144	109	9.7

* SEE NOTE 2

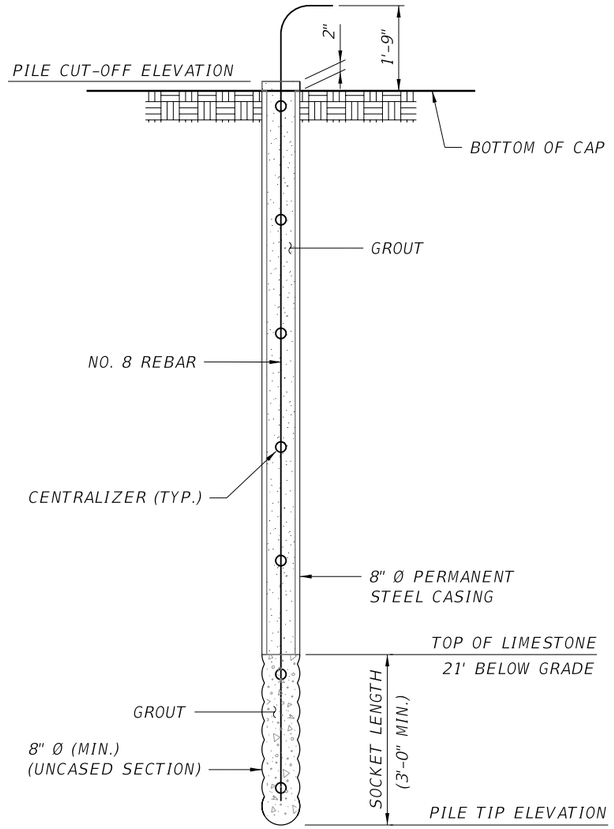

MICROPILE ELEVATION

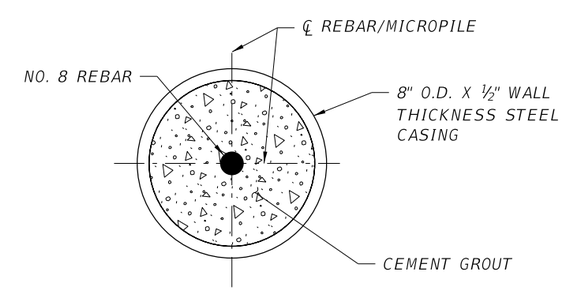

SECTION C-C

(TYPICAL MICROPILE SECTION)

NOTES:

1. FOR LOCATION OF SECTION C-C, SEE SHEET T-26.
2. PORTLAND CEMENT GROUT QUANTITY IS BASED ON THE MICROPILE VOLUME ALONE. A GROUT FACTOR SHOULD BE ANTICIPATED.

Designed By : JCF 09-13
Checked By : REF 09-13
Drawn By : JCF 09-13
Checked By : REF 09-13

NOTICE: THE OFFICIAL RECORD OF THIS SHEET IS THE ELECTRONIC FILE SIGNED AND SEALED UNDER RULE 61G15-23.003, F.A.C.

REVISIONS			
DATE	DESCRIPTION	DATE	DESCRIPTION

BCC Engineering, Inc.
Robert Forand, PE
P.E. License No. 58611
4901 NW 17th Way, Suite 506 Fort Lauderdale, FL 33309
Phone: (954) 928-1828 Fax: (954) 928-1551
Certificate of Authorization No. 7184

STATE OF FLORIDA
DEPARTMENT OF TRANSPORTATION

ROAD NO.	COUNTY	FINANCIAL PROJECT ID
A1A	BROWARD	428727-1-52-01

MICROPILE TABLE, NOTES AND DETAILS

SHEET NO.
T-24

MAST ARM DRILLED SHAFT FOUNDATION - DRILLED SHAFT DATA TABLE

Table Date 07/01/13

INSTALLATION CRITERIA						DESIGN CRITERIA							TESTING	
MAST ARM NO.	SHAFT SIZE (IN.)	(1) TIP ELEV. (FT.)	(2) MIN. TIP ELEV. (FT.)	MIN. ROCK SOCKET DEPTH (FT.)	(3) TOP OF ROCK SOCKET ELEV. (FT.)	FACTORED DESIGN LOAD (TONS)	SERVICE DESIGN UPLIFT LOAD (TONS)	DOWN DRAG (TONS)	LONG TERM SCOUR ELEV. (FT.)	100-YEAR SCOUR ELEV. (FT.)	Ø COMPRESSION	Ø UPLIFT	(4) CONSIDER NONREDUNDANT	TOP OF DRILLED SHAFT ELEVATION (FT.)
1-1	24	-19	-21.6	-	-15	9	0	N/A	N/A	N/A	N/A	N/A	YES	-0.6
2-1	24	-25	-25.7	4	-21	9	0	N/A	N/A	N/A	N/A	N/A	YES	-0.7
2-3	24	-21	-21.1	-	-16	9	0	N/A	N/A	N/A	N/A	N/A	YES	-0.1
3-1	24	-22	-22.9	4	-18	9	0	N/A	N/A	N/A	N/A	N/A	YES	-0.9
3-2	24	-21	-21.2	4	-17	9	0	N/A	N/A	N/A	N/A	N/A	YES	-0.2
3-4	24	-22	-22.3	4	-18	9	0	N/A	N/A	N/A	N/A	N/A	YES	-0.3

(1) THE TIP ELEVATION IS THE HIGHEST ELEVATION THE SHAFT TIP SHALL BE CONSTRUCTED.

(2) THE MIN. TIP ELEVATION IS THE TIP ELEVATION REQUIRED FOR LATERAL AND AXIAL STABILITY.

(3) SHAFT LENGTHS AT MAST ARMS 1-1 AND 2-3 CONTROLLED BY OVERTURNING. AT ALL OTHER LOCATIONS, SHAFT LENGTH CONTROLLED BY ROCK SOCKET.

MAST ARM DRILLED SHAFT FOUNDATION QUANTITIES TABLE

MAST ARM NO.	CLASS V CONCRETE (CY)	WT. REINF. (LBS.)	LENGTH OF 24" DRILLED SHAFTS (LF)	LENGTH OF 54" DRILLED SHAFT (LF)	CLASS IV CONCRETE (DRILLED SHAFT) (CY)
1-1	5.67	2176	42	-	4.89
1-2	0.00	1962	-	21	12.37
1-3	0.00	1962	-	21	12.37
2-1	6.13	2488	50	-	5.82
2-3	4.86	2103	42	-	4.65
3-1	6.13	2398	44	-	5.11
3-2	3.24	2211	42	-	4.89
3-3	0.00	1898	-	21	12.37
3-4	3.65	1924	44	-	5.59
TOTAL	29.68	19122	492	63	62.47

NOTE:

FOR LOCATION OF SECTION F-F, SEE SHEETS T-27 AND T-28.

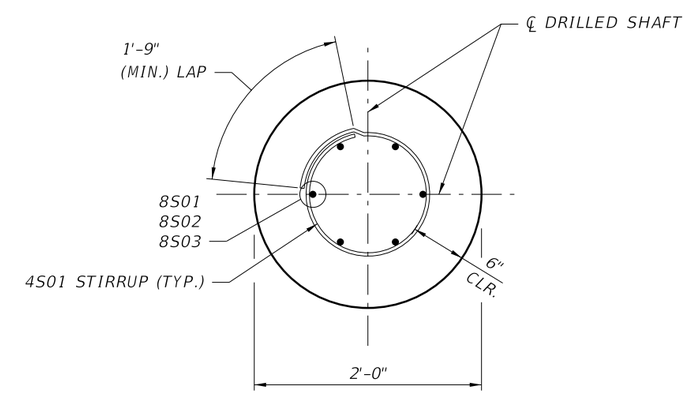

SECTION F-F
(TYPICAL DRILLED SHAFT)

REVISIONS			
DATE	DESCRIPTION	DATE	DESCRIPTION

BCC Engineering, Inc.
Robert Forand, PE
P.E. License No. 58611
4901 NW 17th Way, Suite 506 Fort Lauderdale, FL 33309
Phone: (954) 928-1828 Fax: (954) 928-1551
Certificate of Authorization No. 7184

STATE OF FLORIDA
DEPARTMENT OF TRANSPORTATION

ROAD NO.	COUNTY	FINANCIAL PROJECT ID
AIA	BROWARD	428727-1-52-01

DRILLED SHAFT TABLE, NOTES AND DETAILS

SHEET NO.
T-25

NOTICE: THE OFFICIAL RECORD OF THIS SHEET IS THE ELECTRONIC FILE SIGNED AND SEALED UNDER RULE 61G15-23.003, F.A.C.

Designed By : JCF 09-13
Checked By : REF 09-13
Drawn By : JCF 09-13
Checked By : REF 09-13

MAST ARM 2-2 FOUNDATION

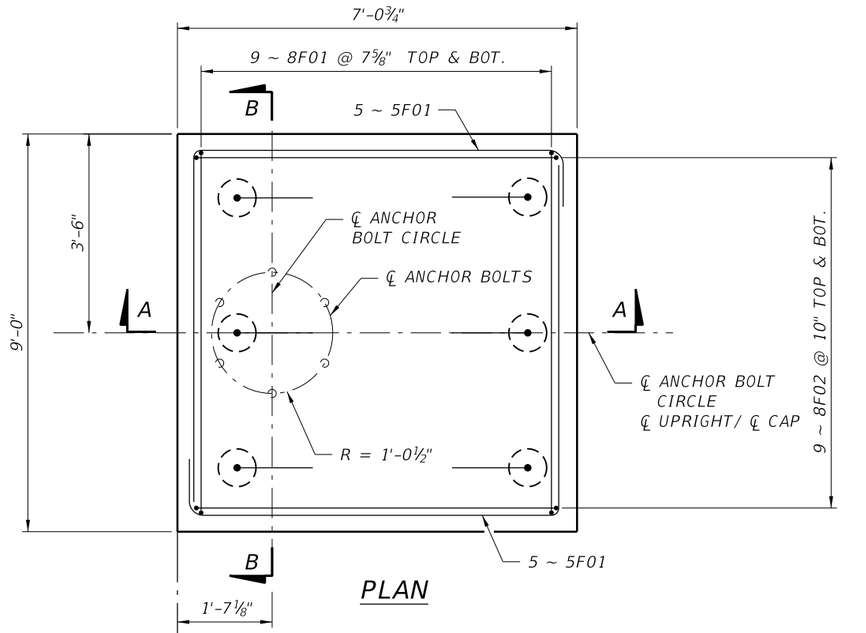

PLAN

MAST ARM 2-2 MICROPILE FOUNDATION REINFORCING LIST

MARK		LENGTH		NO	TYP	STY		B		C		D	
SIZE	DES	FT	IN	BARS	BAR	A	G	FT	IN	FT	IN	FT	IN
5	F01	16	0	10	11			6	4 1/2	8	4	1	3
8	F01	12	5	18	11			8	2 1/2	2	1	2	1
8	F02	10	10	18	11			6	3 1/2	2	3	2	3
8	F03	26	5	6	10			25	1	1	4		

NOTE: FOR BAR BENDING DETAILS, REFER TO FDOT DESIGN STANDARD INDEX NO. 21300.

NOTES:

1. FOR MICROPILE INFORMATION AND SECTION C-C, SEE SHEET T-24.
2. ANCHOR BOLTS SHALL BE INSTALLED TO THE DEPTH AND IN THE CONFIGURATION SHOWN.
3. FOR CONDUIT DETAILS SEE SIGNAL SHEETS.

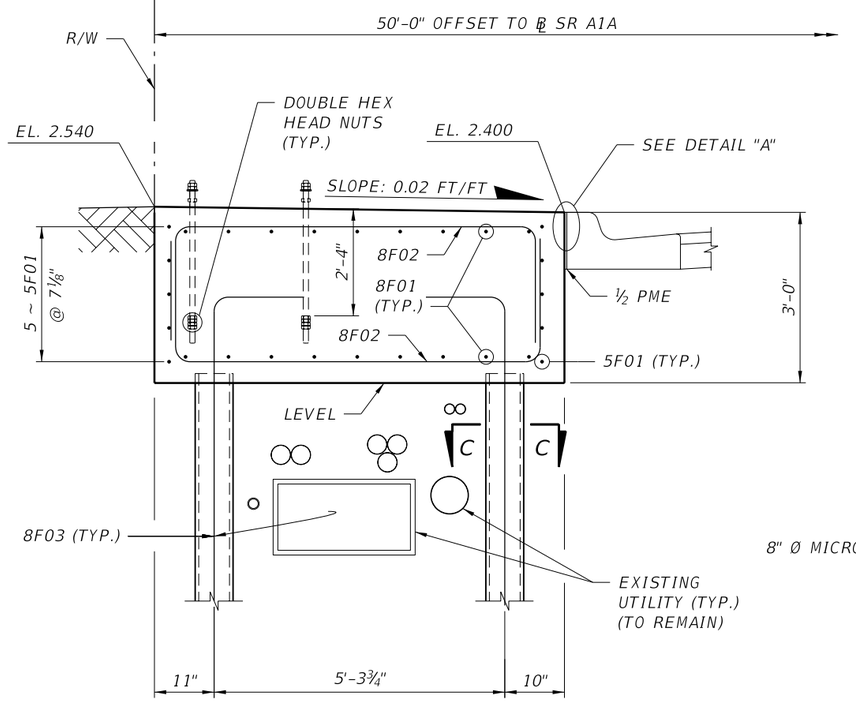

SECTION A-A

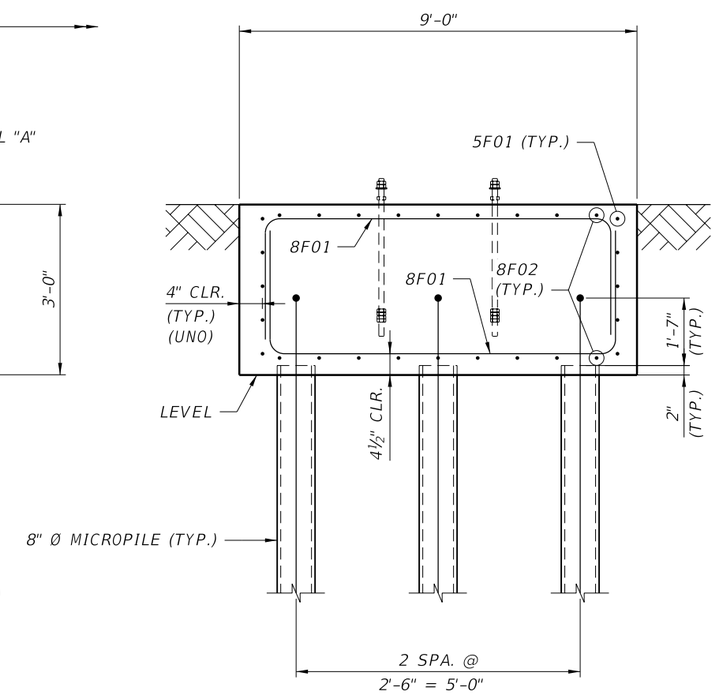

SECTION B-B

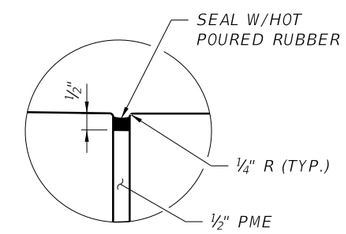

DETAIL "A"

Designed By : JCF 09-13
Checked By : REF 09-13

Drawn By : JCF 09-13
Checked By : REF 09-13

NOTICE: THE OFFICIAL RECORD OF THIS SHEET IS THE ELECTRONIC FILE SIGNED AND SEALED UNDER RULE 61G15-23.003, F.A.C.

REVISIONS			
DATE	DESCRIPTION	DATE	DESCRIPTION

BCC Engineering, Inc.
Robert Forand, PE
P.E. License No. 58611
4901 NW 17th Way, Suite 506 Fort Lauderdale, FL 33309
Phone: (954) 928-1828 Fax: (954) 928-1551
Certificate of Authorization No. 7184

STATE OF FLORIDA
DEPARTMENT OF TRANSPORTATION

ROAD NO.	COUNTY	FINANCIAL PROJECT ID
A1A	BROWARD	428727-1-52-01

MAST ARM 2-2
MICROPILE FOUNDATION

SHEET NO.
T-26

MAST ARMS 1-1, 2-1, 3-1, 3-2 DRILLED SHAFT FOUNDATIONS

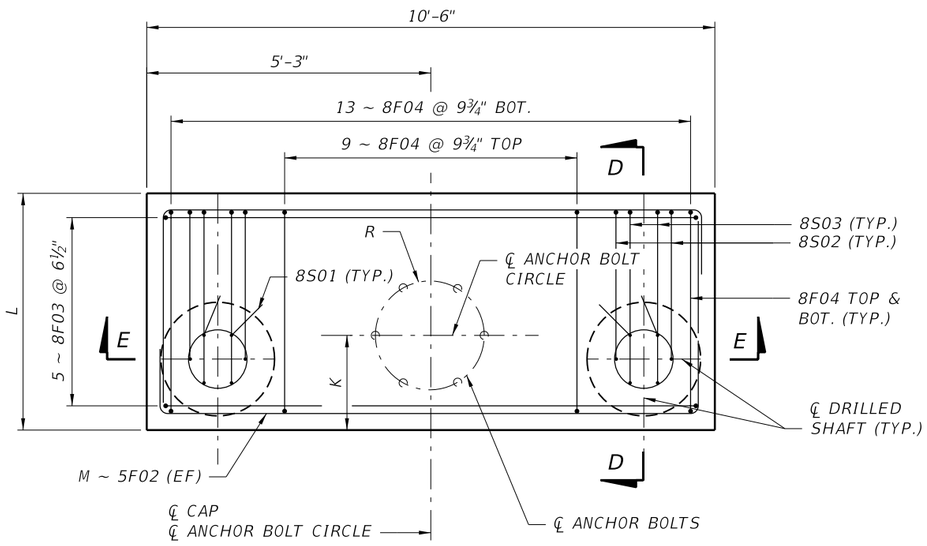

PLAN

MAST ARM DRILLED SHAFT FOUNDATION TABLE OF VARIABLES										
MAST ARM NO.	EL. X	EL. Z	L	T	D	J	K	R	M	N
1-1	2.79'	2.70'	4'-2"	3'-6"	2'-11"	2'-10"	1'-7 1/8"	1'-1/2"	5	8 3/8"
2-1	2.75'	2.66'	4'-6"	3'-6"	3'-3"	2'-10"	1'-7 1/8"	1'-1/2"	5	8 3/8"
3-1	2.48'	2.39'	4'-6"	3'-6"	3'-3"	2'-10"	1'-7 1/8"	1'-1/2"	5	8 3/8"
3-2	2.21'	2.12'	4'-2"	2'-0"	2'-11"	1'-4"	1'-9 1/4"	11 1/2"	3	7 3/4"

NOTES:

1. FOR DRILLED SHAFT INFORMATION AND SECTION F-F, SEE SHEET T-25.
2. ANCHOR BOLTS SHALL BE INSTALLED TO THE DEPTH AND IN THE CONFIGURATION SHOWN.
3. FOR REINFORCING BAR LIST, SEE SHEET T-29.
4. FOR CONDUIT DETAILS, SEE SIGNAL SHEETS.
5. FOR DETAIL "A" SEE SHEET T-26.

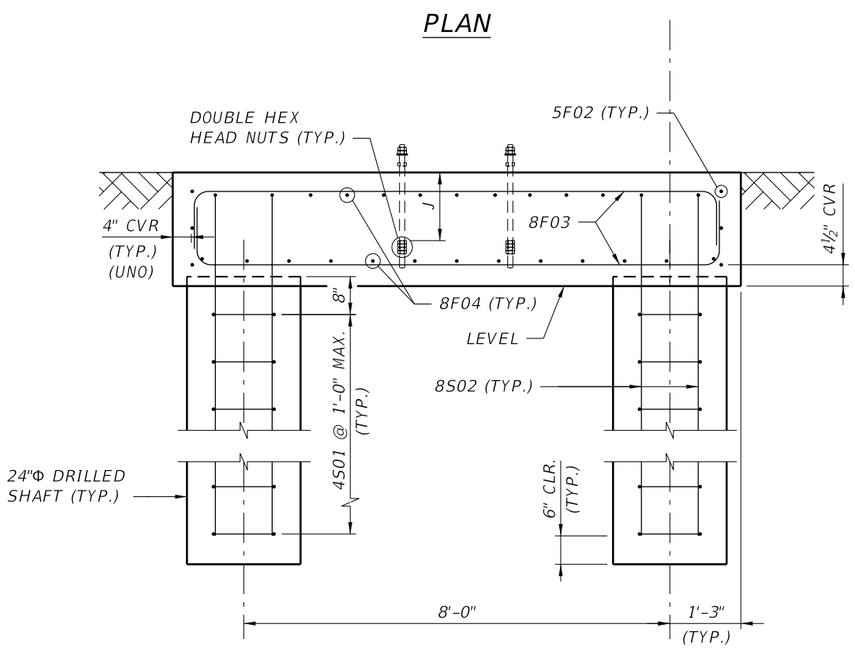

SECTION E-E

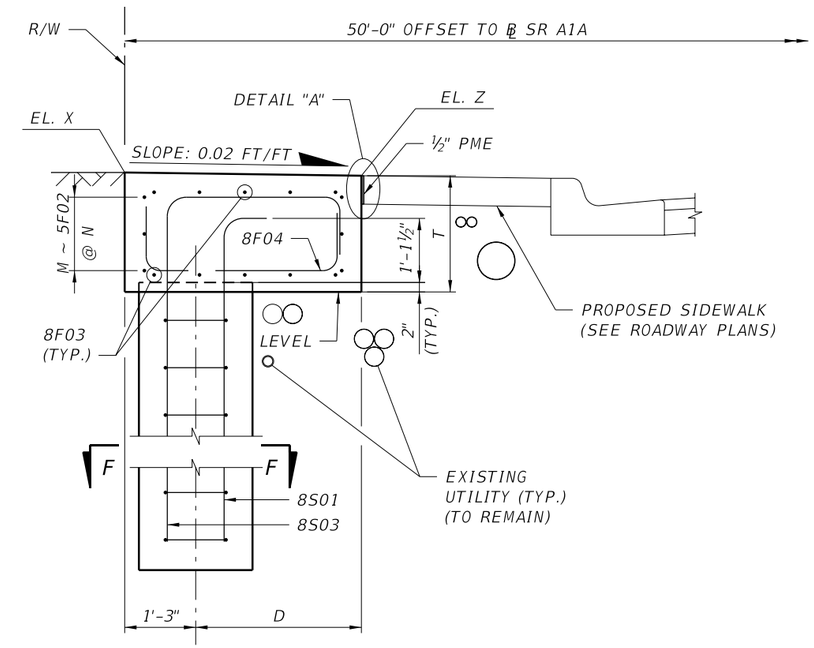

SECTION D-D

REVISIONS			
DATE	DESCRIPTION	DATE	DESCRIPTION

BCC Engineering, Inc.
Robert Forand, PE
P.E. License No. 58611
4901 NW 17th Way, Suite 506 Fort Lauderdale, FL 33309
Phone: (954) 928-1828 Fax: (954) 928-1551
Certificate of Authorization No. 7184

STATE OF FLORIDA
DEPARTMENT OF TRANSPORTATION

ROAD NO.	COUNTY	FINANCIAL PROJECT ID
A1A	BROWARD	428727-1-52-01

MAST ARM DRILLED SHAFT FOUNDATIONS (1 OF 2)

SHEET NO. T-27

Designed By : JCF 09-13
Checked By : REF 09-13
Drawn By : JCF 09-13
Checked By : REF 09-13

NOTICE: THE OFFICIAL RECORD OF THIS SHEET IS THE ELECTRONIC FILE SIGNED AND SEALED UNDER RULE 61G15-23.003, F.A.C.

emsierra 12/2/2013 7:37:14 PM H:\e\Projects\42872715201\struct\BOMiscStrMastarm02.dgn

MAST ARM 2-3 & 3-4 DRILLED SHAFT FOUNDATION

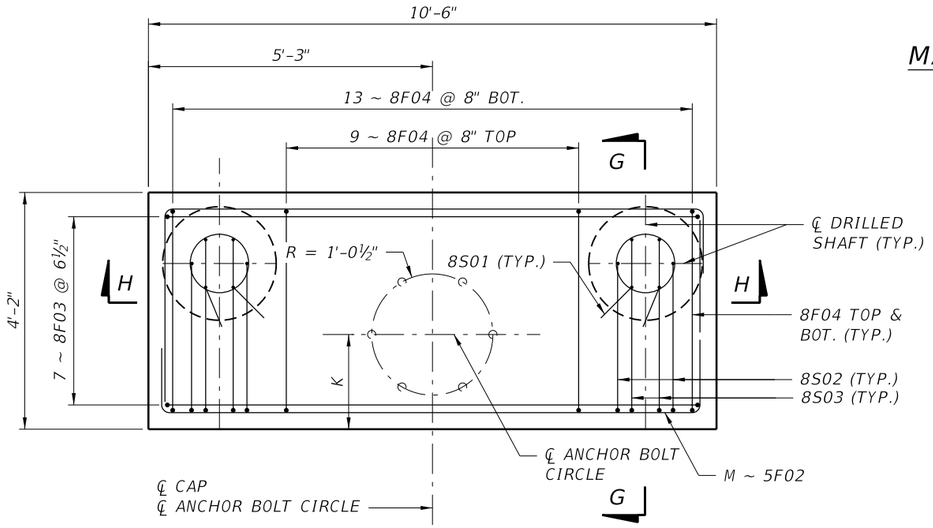

PLAN

MAST ARM DRILLED SHAFT FOUNDATION TABLE OF VARIABLES							
MAST ARM NO.	EL. X	EL. Z	T	J	K	M	N
2-3	2.77	2.69	3'-0"	2'-4"	1'-7 1/8"	4	8 1/8"
3-4	2.62	2.54	2'-3"	1'-7"	1'-7 3/8"	3	7 3/4"

NOTES:

1. FOR DRILLED SHAFT INFORMATION AND SECTION F-F, SEE SHEET T-25.
2. ANCHOR BOLTS SHALL BE INSTALLED TO THE DEPTH AND IN THE CONFIGURATION SHOWN.
3. FOR REINFORCEMENT BAR LIST, SEE SHEET T-29.
4. FOR DETAIL "A", SEE SHEET T-26.
5. FOR CONDUIT DETAILS, SEE SIGNAL SHEETS.

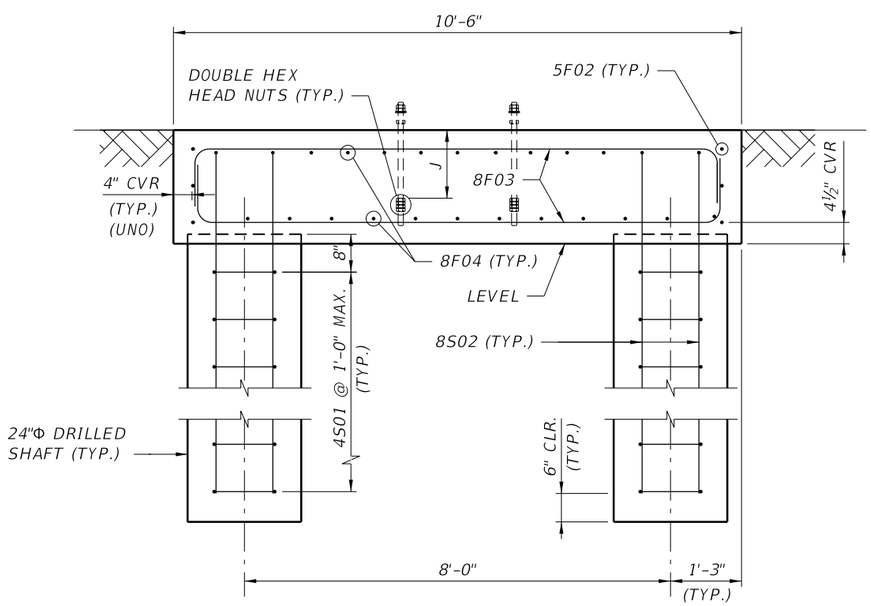

SECTION H-H

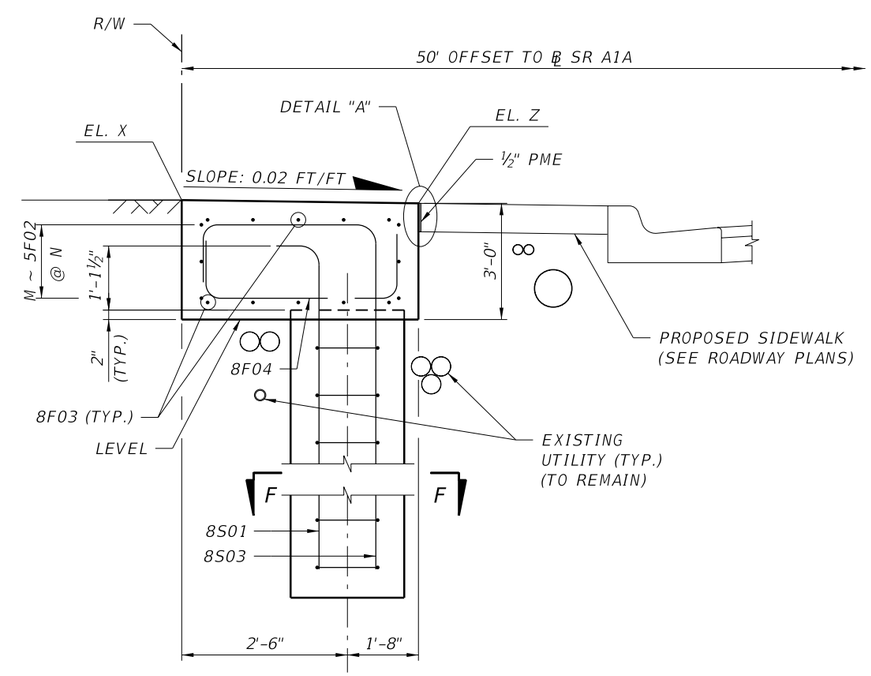

SECTION G-G

REVISIONS			
DATE	DESCRIPTION	DATE	DESCRIPTION

BCC Engineering, Inc.
Robert Forand, PE
P.E. License No. 58611
4901 NW 17th Way, Suite 506 Fort Lauderdale, FL 33309
Phone: (954) 928-1828 Fax: (954) 928-1551
Certificate of Authorization No. 7184

STATE OF FLORIDA
DEPARTMENT OF TRANSPORTATION

ROAD NO.	COUNTY	FINANCIAL PROJECT ID
A1A	BROWARD	428727-1-52-01

MAST ARM DRILLED SHAFT FOUNDATIONS (2 OF 2)

SHEET NO. T-28

emslerra 12/2/2013 7:37:15 PM H:\e\Projects\4287271520l\struct\BOMlscStrMastarm03.dgn

Designed By : JCF 09-13
Checked By : REF 09-13
Drawn By : JCF 09-13
Checked By : REF 09-13

NOTICE: THE OFFICIAL RECORD OF THIS SHEET IS THE ELECTRONIC FILE SIGNED AND SEALED UNDER RULE 61G15-23.003, F.A.C.

MAST ARM 1-1 - DRILLED SHAFT FOUNDATION

MARK		LENGTH		NO	TYP	STY		B		C		D	
SIZE	DES	FT	IN	BARS	BAR	A	G	FT	IN	FT	IN	FT	IN
4	S01	3 - 1		42	24			1 - 9		0 - 5 1/2			
8	S01	23 - 6		4	10			22 - 2		1 - 4			
8	S02	28 - 10		4	11			2 - 6		2 - 11		23 - 5	
8	S03	28 - 9		4	11			2 - 6		2 - 10		23 - 5	
5	F02	14 - 7		10	11			9 - 10		3 - 6		1 - 3	
8	F03	15 - 4		10	11			9 - 8 1/2		2 - 9 1/2		2 - 9 1/2	
8	F04	8 - 8		24	11			3 - 4 1/2		2 - 7 1/2		2 - 7 1/2	

MAST ARM 2-1 - DRILLED SHAFT FOUNDATION

MARK		LENGTH		NO	TYP	STY		B		C		D	
SIZE	DES	FT	IN	BARS	BAR	A	G	FT	IN	FT	IN	FT	IN
4	S01	3 - 1		50	24			1 - 9		0 - 5 1/2			
8	S01	27 - 6		4	10			26 - 2		1 - 4			
8	S02	33 - 2		4	11			2 - 10		2 - 11		27 - 5	
8	S03	33 - 5		4	11			2 - 10		3 - 2		27 - 5	
5	F02	15 - 3		10	11			9 - 10		4 - 2		1 - 3	
8	F03	15 - 4		10	11			9 - 8 1/2		2 - 9 1/2		2 - 9 1/2	
8	F04	9 - 0		24	11			3 - 8 1/2		2 -7 1/2		2 - 7 1/2	

MAST ARM 2-3 - DRILLED SHAFT FOUNDATION

MARK		LENGTH		NO	TYP	STY		B		C		D	
SIZE	DES	FT	IN	BARS	BAR	A	G	FT	IN	FT	IN	FT	IN
4	S01	3 - 1		40	24			1 - 9		0 - 5 1/2			
8	S01	26 - 6		4	10			25 - 2		1 - 4			
8	S02	32 - 2		4	11			2 - 10		2 - 11		26 - 5	
8	S03	32 - 8		4	11			2 - 10		3 - 5		26 - 5	
5	F02	14 - 7		6	11			9 - 10		3 - 6		1 - 3	
8	F03	14 - 4		10	11			9 - 8 1/2		2 - 3 1/2		2 - 3 1/2	
8	F04	6 - 2		24	11			3 - 4 1/2		2 - 1 1/2		2 - 1 1/2	

MAST ARM 3-1 - DRILLED SHAFT FOUNDATION

MARK		LENGTH		NO	TYP	STY		B		C		D	
SIZE	DES	FT	IN	BARS	BAR	A	G	FT	IN	FT	IN	FT	IN
4	S01	3 - 1		44	24			1 - 9		0 - 5 1/2			
8	S01	24 - 6		4	10			23 - 2		1 - 4			
8	S02	30 - 2		4	11			2 - 10		2 - 11		24 - 5	
8	S03	30 - 5		4	11			2 - 10		3 - 2		24 - 5	
5	F02	15 - 3		10	11			9 - 10		4 - 2		1 - 3	
8	F03	15 - 4		10	11			9 - 8 1/2		2 - 9 1/2		2 - 9 1/2	
8	F04	9 - 0		24	11			3 - 8 1/2		2 - 7 1/2		2 - 7 1/2	

MAST ARM 3-2 - DRILLED SHAFT FOUNDATION

MARK		LENGTH		NO	TYP	STY		B		C		D	
SIZE	DES	FT	IN	BARS	BAR	A	G	FT	IN	FT	IN	FT	IN
4	S01	3 - 1		42	24			1 - 9		0 - 5 1/2			
8	S01	23 - 6		4	10			22 - 2		1 - 4			
8	S02	28 - 10		4	11			2 - 6		2 - 11		23 - 5	
8	S03	28 - 9		4	11			2 - 6		2 - 10		23 - 5	
5	F02	14 - 7		6	11			9 - 10		3 - 6		1 - 3	
8	F03	12 - 4		14	11			9 - 8 1/2		1 - 3 1/2		1 - 3 1/2	
8	F04	5 - 8		24	11			3 - 4 1/2		1 - 1 1/2		1 - 1 1/2	

MAST ARM 3-4 - DRILLED SHAFT FOUNDATION

MARK		LENGTH		NO	TYP	STY		B		C		D	
SIZE	DES	FT	IN	BARS	BAR	A	G	FT	IN	FT	IN	FT	IN
4	S01	3 - 1		48	24			1 - 9		0 - 5 1/2			
8	S01	26 - 6		4	10			25 - 2		1 - 4			
8	S02	31 - 5		4	11			2 - 1		2 - 11		26 - 5	
8	S03	31 - 11		4	11			2 - 1		3 - 5		26 - 5	
5	F02	14 - 7		6	11			9 - 10		3 - 6		1 - 3	
8	F03	12 - 10		10	11			9 - 8 1/2		1 - 6 1/2		1 - 6 1/2	
8	F04	6 - 2		24	11			3 - 4 1/2		1 - 4 1/2		1 - 4 1/2	

NOTE: FOR BAR BENDING DETAILS, REFER TO FDOT DESIGN STANDARD INDEX NO. 21300.

Designed By : JCF 09-13
Checked By : REF 09-13

Drawn By : JCF 09-13
Checked By : REF 09-13

NOTICE: THE OFFICIAL RECORD OF THIS SHEET IS THE ELECTRONIC FILE SIGNED AND SEALED UNDER RULE 61G15-23.003, F.A.C.

REVISIONS			
DATE	DESCRIPTION	DATE	DESCRIPTION

BCC Engineering, Inc.
Robert Forand, PE
P.E. License No. 58611
4901 NW 17th Way, Suite 506 Fort Lauderdale, FL 33309
Phone: (954) 928-1828 Fax: (954) 928-1551
Certificate of Authorization No. 7184

STATE OF FLORIDA
DEPARTMENT OF TRANSPORTATION

ROAD NO.	COUNTY	FINANCIAL PROJECT ID
A1A	BROWARD	428727-1-52-01

DRILLED SHAFT FOUNDATION REINFORCING BAR LIST

SHEET NO.
T-29

– S.R. A1A/SOUTH OCEAN DRIVE FROM COUNTY LINE ROAD TO SEACREST PARKWAY
(PSI PROJECT No. 0397–559, TWO #40)

BORING No.	MA-1
NORTHING	597588
EASTING	945402
STATION	9+55
OFFSET	26 LT.
DATE	03/19/13

BORING No.	MA-2
NORTHING	597592
EASTING	945455
STATION	9+55
OFFSET	25 RT.
DATE	03/18/13

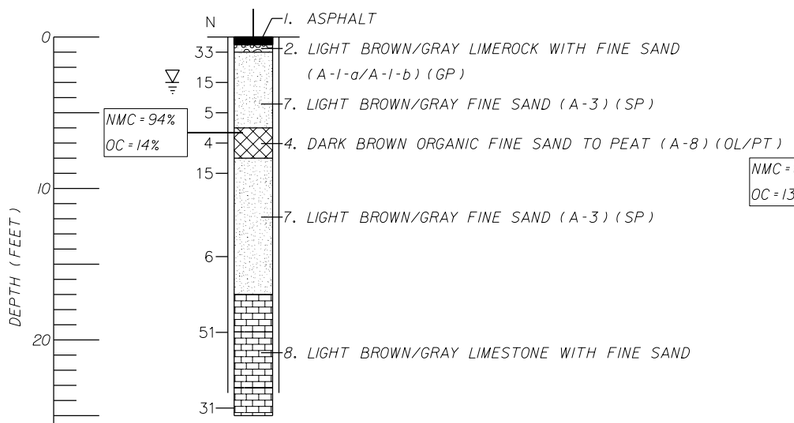

BORING TERMINATED @
DEPTH 25 FEET
CASING TERMINATED @
DEPTH 23.5 FEET

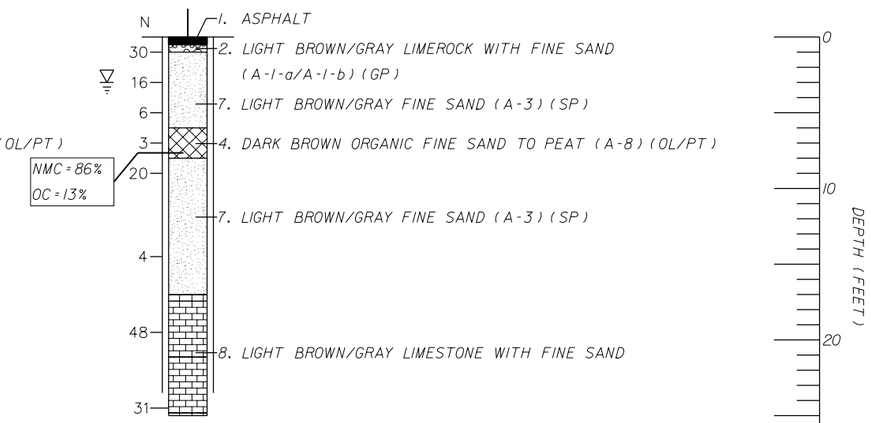

BORING TERMINATED @
DEPTH 25 FEET
CASING TERMINATED @
DEPTH 23.5 FEET

0 5' 10'
VERTICAL SCALE
HORIZONTAL N.T.S.

NOTES

- PLANE COORDINATE DATA AT THE SPT BORING LOCATION WAS OBTAINED USING A HAND HELD GPS INSTRUMENT (GARMIN 62STC). THE DATA IS ACCURATE TO WITHIN 15 FEET
- THE STATION AND OFFSET DATA IS REFERENCED TO S.R. AIA BASELINE AND WAS INTERPRETED USING THE SUPPLIED PLANS

N NUMBERS TO THE LEFT OF BORINGS INDICATE SPT VALUE FOR 12" PENETRATION

▽ WATER TABLE AT TIME OF DRILLING

|| || 3-INCH DIAMETER CASING USED (NW)

DRILLED BY LUIS RODRIGUEZ (PSI)

OC ORGANIC CONTENT (%)

-200 PERCENTAGE PASSING NO. 200 SIEVE (%)

NMC NATURAL MOISTURE CONTENT (%)

LEGEND

1. ASPHALT
2. LIGHT BROWN/GRAY LIMEROCK WITH FINE SAND (A-1-a/A-1-b) (GP)
3. LIGHT BROWN/GRAY FINE SAND WITH TRACES OF LIMEROCK (A-3) (SP)
4. DARK BROWN ORGANIC FINE SAND TO PEAT (A-8) (OL/PT)
5. LIGHT BROWN/GRAY SILTY FINE SAND (A-2-4) (SM)
6. LIGHT BROWN/GRAY SANDY SILT (A-4) (ML)
7. LIGHT BROWN/GRAY FINE SAND (A-3) (SP)
8. LIGHT BROWN/GRAY LIMESTONE WITH FINE SAND

GRANULAR MATERIALS - RELATIVE DENSITY	AUTOMATIC HAMMER SPT-N (BLOWS/12-INCH)
VERY LOOSE	LESS THAN 3
LOOSE	3-8
MEDIUM DENSE	8-24
DENSE	24-40
VERY DENSE	GREATER THAN 40
SILTS AND CLAYS CONSISTENCY	**AUTOMATIC HAMMER SPT-N (BLOWS/12-INCH)**
VERY SOFT	LESS THAN 1
SOFT	1-3
FIRM	3-6
STIFF	6-12
VERY STIFF	12-24
HARD	GREATER THAN 24

ENVIRONMENTAL CLASSIFICATION

SUBSTRUCTURES: EXTREMELY AGGRESSIVE (CHLORIDE > 6,000 ppm)
SUPERSTRUCTURES: EXTREMELY AGGRESSIVE

NOTE

THE INSTALATION OF THE MAST ARM FOUNDATIONS WILL REQUIRE AUGER DRILLING THROUGH THE LIMESTONE FORMATION. THEREFORE, THE CONTRACTOR SHOULD ANTICIPATE A HIGH RESISTANCE TO DRILLIG ACTIVITY. SPECIAL EQUIPMENT AND BREAKING TOOLS MAY BE REQUIRED.

SPT NOTES

HAMMER WEIGHT	140 LBS.
HAMMER DROP HEIGHT	30 INCHES
TYPE OF HAMMER	AUTOMATIC
SPOON INSIDE DIAMETER	1.500 INCH
SPOON INSIDE DIAMETER (AT OPENING)	1.375 INCH
SPOON OUTSIDE DIAMETER	2.000 INCH
TYPE OF RIG	CME 55

NOTICE: THE OFFICIAL RECORD OF THIS SHEET IS THE ELECTRONIC FILE SIGNED AND SEALED UNDER RULE 61G15-23.003, F.A.C.

REVISIONS			
DATE	DESCRIPTION	DATE	DESCRIPTION

PSI ENVIRONMENTAL GEOTECHNICAL CONSTRUCTION
7950 N.W. 64TH STREET, MIAMI, FL 33166
PHONE: (305) 471-7725 - FAX: (305) 593-1915
CERTIFICATE OF AUTHORIZATION No. 3684
ENGINEER OF RECORD: DHURUVA BADRI, P.E. No. 68718

STATE OF FLORIDA
DEPARTMENT OF TRANSPORTATION

ROAD NO.	COUNTY	FINANCIAL PROJECT ID
AIA	BROWARD	428727-1-52-01

REPORT OF CORE BORINGS

SHEET NO.
GT-1

– S.R. A1A/SOUTH OCEAN DRIVE FROM COUNTY LINE ROAD TO SEACREST PARKWAY
(PSI PROJECT No. 0397–559, TWO #40)

BORING No.	MA-3
NORTHING	597734
EASTING	945447
STATION	10+85
OFFSET	33 RT.
DATE	03/18/13

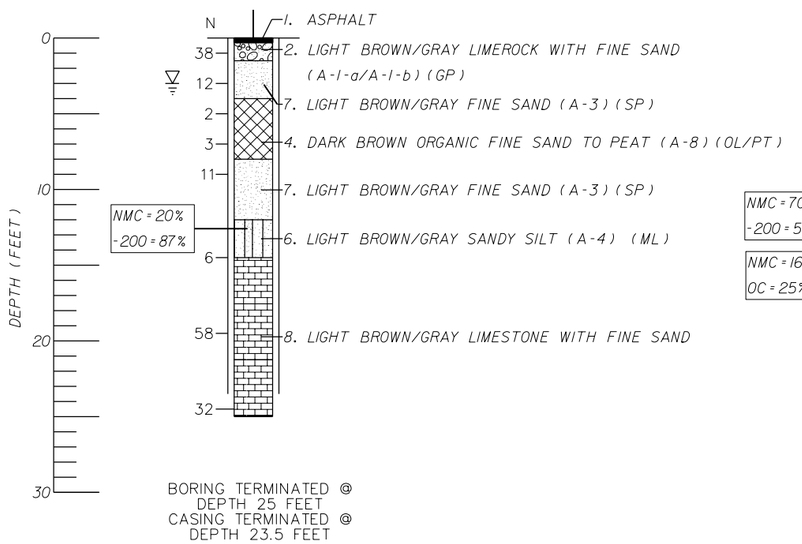

BORING TERMINATED @
DEPTH 25 FEET
CASING TERMINATED @
DEPTH 23.5 FEET

BORING No.	MA-4
NORTHING	599176
EASTING	945198
STATION	25+63
OFFSET	33 LT.
DATE	03/19/13

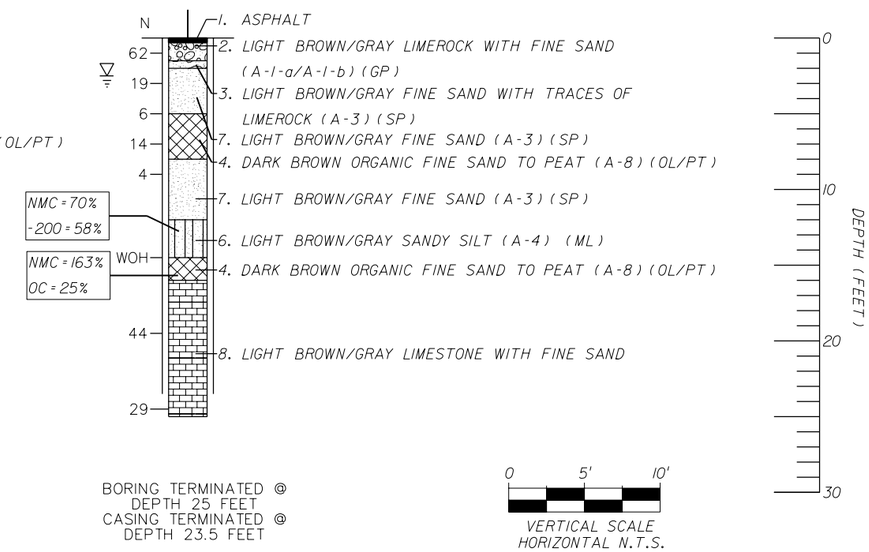

BORING TERMINATED @
DEPTH 25 FEET
CASING TERMINATED @
DEPTH 23.5 FEET

0 5' 10'
VERTICAL SCALE
HORIZONTAL N.T.S.

NOTES

- PLANE COORDINATE DATA AT THE SPT BORING LOCATION WAS OBTAINED USING A HAND HELD GPS INSTRUMENT (GARMIN 62STC). THE DATA IS ACCURATE TO WITHIN 15 FEET
- THE STATION AND OFFSET DATA IS REFERENCED TO S.R. A1A BASELINE AND WAS INTERPRETED USING THE SUPPLIED PLANS

N NUMBERS TO THE LEFT OF BORINGS INDICATE SPT VALUE FOR 12" PENETRATION

▽ WATER TABLE AT TIME OF DRILLING

|| || 3-INCH DIAMETER CASING USED (NW)

DRILLED BY LUIS RODRIGUEZ (PSI)

OC ORGANIC CONTENT (%)

-200 PERCENTAGE PASSING NO. 200 SIEVE (%)

NMC NATURAL MOISTURE CONTENT (%)

LEGEND

1. ASPHALT
2. LIGHT BROWN/GRAY LIMEROCK WITH FINE SAND (A-1-a/A-1-b) (GP)
3. LIGHT BROWN/GRAY FINE SAND WITH TRACES OF LIMEROCK (A-3) (SP)
4. DARK BROWN ORGANIC FINE SAND TO PEAT (A-8) (OL/PT)
5. LIGHT BROWN/GRAY SILTY FINE SAND (A-2-4) (SM)
6. LIGHT BROWN/GRAY SANDY SILT (A-4) (ML)
7. LIGHT BROWN/GRAY FINE SAND (A-3) (SP)
8. LIGHT BROWN/GRAY LIMESTONE WITH FINE SAND

NOTE

WOOD FRAGMENTS NOTED IN BORING MA-4, IN THE SAMPLE RECOVERED IN THE 1.5 TO 2.0 FOOT DEPTH INTERVAL.

ENVIRONMENTAL CLASSIFICATION

SUBSTRUCTURES: EXTREMELY AGGRESSIVE (CHLORIDE > 6,000 ppm)
SUPERSTRUCTURES: EXTREMELY AGGRESSIVE

NOTE

THE INSTALATION OF THE MAST ARM FOUNDATIONS WILL REQUIRE AUGER DRILLING THROUGH THE LIMESTONE FORMATION. THEREFORE, THE CONTRACTOR SHOULD ANTICIPATE A HIGH RESISTANCE TO DRILLIG ACTIVITY. SPECIAL EQUIPMENT AND BREAKING TOOLS MAY BE REQUIRED.

SPT NOTES

HAMMER WEIGHT	140 LBS.
HAMMER DROP HEIGHT	30 INCHES
TYPE OF HAMMER	AUTOMATIC
SPOON INSIDE DIAMETER	1.500 INCH
SPOON INSIDE DIAMETER (AT OPENING)	1.375 INCH
SPOON OUTSIDE DIAMETER	2.000 INCH
TYPE OF RIG	CME 55

GRANULAR MATERIALS - RELATIVE DENSITY	AUTOMATIC HAMMER SPT-N (BLOWS/12-INCH)
VERY LOOSE	LESS THAN 3
LOOSE	3-8
MEDIUM DENSE	8-24
DENSE	24-40
VERY DENSE	GREATER THAN 40
SILTS AND CLAYS CONSISTENCY	**AUTOMATIC HAMMER SPT-N (BLOWS/12-INCH)**
VERY SOFT	LESS THAN 1
SOFT	1-3
FIRM	3-6
STIFF	6-12
VERY STIFF	12-24
HARD	GREATER THAN 24

NOTICE: THE OFFICIAL RECORD OF THIS SHEET IS THE ELECTRONIC FILE SIGNED AND SEALED UNDER RULE 61G15-23.003, F.A.C.

REVISIONS			
DATE	DESCRIPTION	DATE	DESCRIPTION

PSI ENVIRONMENTAL GEOTECHNICAL CONSTRUCTION
7950 N.W. 64TH STREET, MIAMI, FL 33166
PHONE: (305) 471-7725 - FAX: (305) 593-1915
CERTIFICATE OF AUTHORIZATION No. 3684
ENGINEER OF RECORD: DHURUVA BADRI, P.E. No. 68718

STATE OF FLORIDA
DEPARTMENT OF TRANSPORTATION

ROAD NO.	COUNTY	FINANCIAL PROJECT ID
A1A	BROWARD	428727-1-52-01

REPORT OF CORE BORINGS

SHEET NO.
GT-2

– S.R. A1A/SOUTH OCEAN DRIVE FROM COUNTY LINE ROAD TO SEACREST PARKWAY
(PSI PROJECT No. 0397–559, TWO #40)

BORING No.	MA-5
NORTHING	599172
EASTING	945264
STATION	25+63
OFFSET	33 RT.
DATE	03/18/13

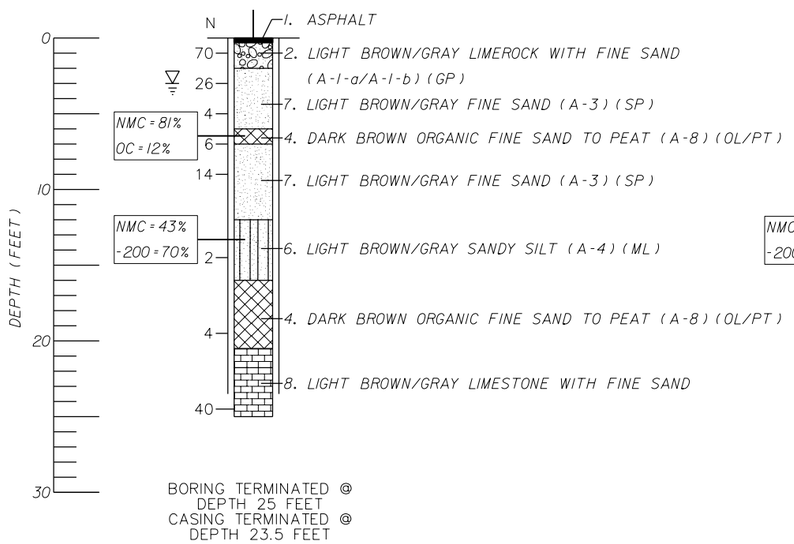

BORING TERMINATED @
DEPTH 25 FEET
CASING TERMINATED @
DEPTH 23.5 FEET

BORING No.	MA-6
NORTHING	599303
EASTING	945273
STATION	26+95
OFFSET	34 RT.
DATE	03/18/13

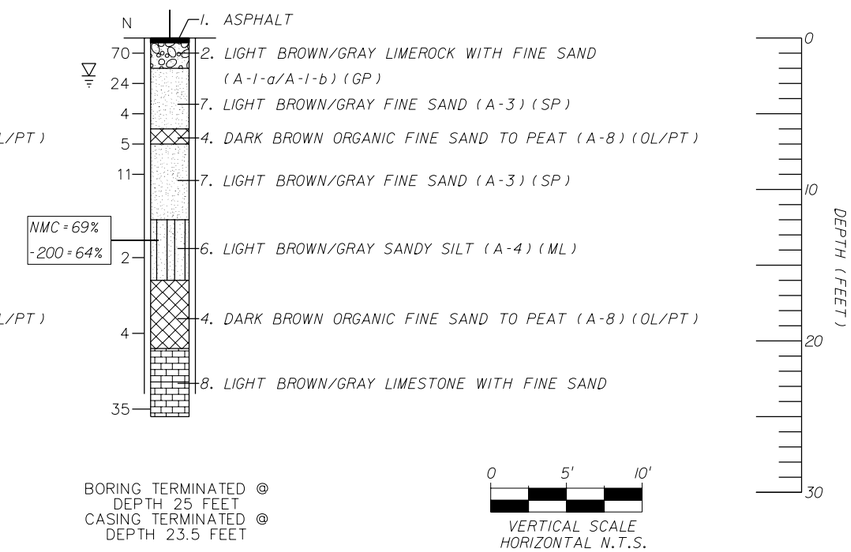

BORING TERMINATED @
DEPTH 25 FEET
CASING TERMINATED @
DEPTH 23.5 FEET

0 5' 10'
VERTICAL SCALE
HORIZONTAL N.T.S.

NOTES

- PLANE COORDINATE DATA AT THE SPT BORING LOCATION WAS OBTAINED USING A HAND HELD GPS INSTRUMENT (GARMIN 62STC). THE DATA IS ACCURATE TO WITHIN 15 FEET
- THE STATION AND OFFSET DATA IS REFERENCED TO S.R. AIA BASELINE AND WAS INTERPRETED USING THE SUPPLIED PLANS

N NUMBERS TO THE LEFT OF BORINGS INDICATE SPT VALUE FOR 12" PENETRATION

▽ WATER TABLE AT TIME OF DRILLING

|| || 3-INCH DIAMETER CASING USED (NW)

DRILLED BY LUIS RODRIGUEZ (PSI)

OC ORGANIC CONTENT (%)

-200 PERCENTAGE PASSING NO. 200 SIEVE (%)

NMC NATURAL MOISTURE CONTENT (%)

LEGEND

1. ASPHALT
2. LIGHT BROWN/GRAY LIMEROCK WITH FINE SAND (A-1-a/A-1-b) (GP)
3. LIGHT BROWN/GRAY FINE SAND WITH TRACES OF LIMEROCK (A-3) (SP)
4. DARK BROWN ORGANIC FINE SAND TO PEAT (A-8) (OL/PT)
5. LIGHT BROWN/GRAY SILTY FINE SAND (A-2-4) (SM)
6. LIGHT BROWN/GRAY SANDY SILT (A-4) (ML)
7. LIGHT BROWN/GRAY FINE SAND (A-3) (SP)
8. LIGHT BROWN/GRAY LIMESTONE WITH FINE SAND

GRANULAR MATERIALS - RELATIVE DENSITY	AUTOMATIC HAMMER SPT-N (BLOWS/12-INCH)
VERY LOOSE	LESS THAN 3
LOOSE	3-8
MEDIUM DENSE	8-24
DENSE	24-40
VERY DENSE	GREATER THAN 40
SILTS AND CLAYS CONSISTENCY	**AUTOMATIC HAMMER SPT-N (BLOWS/12-INCH)**
VERY SOFT	LESS THAN 1
SOFT	1-3
FIRM	3-6
STIFF	6-12
VERY STIFF	12-24
HARD	GREATER THAN 24

ENVIRONMENTAL CLASSIFICATION

SUBSTRUCTURES: EXTREMELY AGGRESSIVE (CHLORIDE > 6,000 ppm)
SUPERSTRUCTURES: EXTREMELY AGGRESSIVE

NOTE

THE INSTALATION OF THE MAST ARM FOUNDATIONS WILL REQUIRE AUGER DRILLING THROUGH THE LIMESTONE FORMATION. THEREFORE, THE CONTRACTOR SHOULD ANTICIPATE A HIGH RESISTANCE TO DRILLIG ACTIVITY. SPECIAL EQUIPMENT AND BREAKING TOOLS MAY BE REQUIRED.

SPT NOTES

HAMMER WEIGHT	140 LBS.
HAMMER DROP HEIGHT	30 INCHES
TYPE OF HAMMER	AUTOMATIC
SPOON INSIDE DIAMETER	1.500 INCH
SPOON INSIDE DIAMETER (AT OPENING)	1.375 INCH
SPOON OUTSIDE DIAMETER	2.000 INCH
TYPE OF RIG	CME 55

NOTICE: THE OFFICIAL RECORD OF THIS SHEET IS THE ELECTRONIC FILE SIGNED AND SEALED UNDER RULE 61G15-23.003, F.A.C.

REVISIONS			
DATE	DESCRIPTION	DATE	DESCRIPTION

PSI ENVIRONMENTAL GEOTECHNICAL CONSTRUCTION
7950 N.W. 64TH STREET, MIAMI, FL 33166
PHONE: (305) 471-7725 - FAX: (305) 593-1915
CERTIFICATE OF AUTHORIZATION No. 3684
ENGINEER OF RECORD: DHURUVA BADRI, P.E. No. 68718

STATE OF FLORIDA
DEPARTMENT OF TRANSPORTATION

ROAD NO.	COUNTY	FINANCIAL PROJECT ID
AIA	BROWARD	428727-1-52-01

REPORT OF CORE BORINGS

SHEET NO.
GT-3

– S.R. A1A/SOUTH OCEAN DRIVE FROM COUNTY LINE ROAD TO SEACREST PARKWAY
(PSI PROJECT No. 0397–559, TWO #40)

BORING No.	MA-7
NORTHING	600081
EASTING	945267
STATION	34+67
OFFSET	34 LT.
DATE	03/19/13

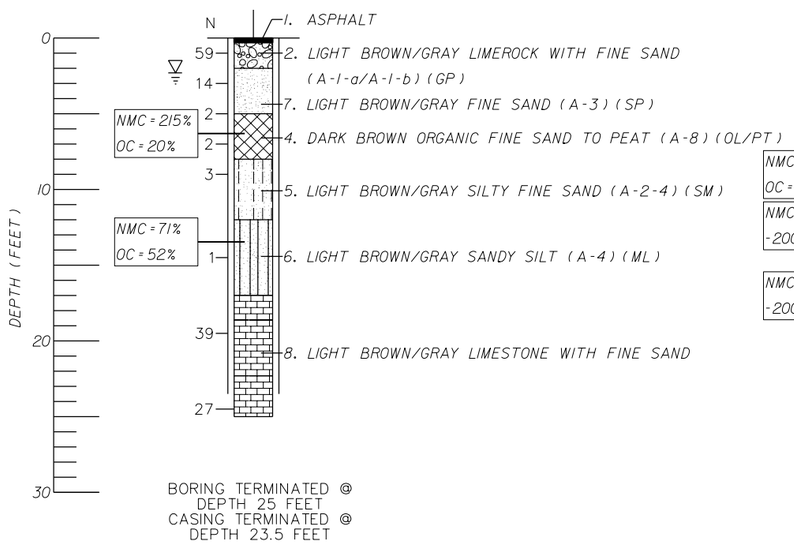

BORING No.	MA-8
NORTHING	600118
EASTING	945339
STATION	35+10
OFFSET	35 RT.
DATE	03/19/13

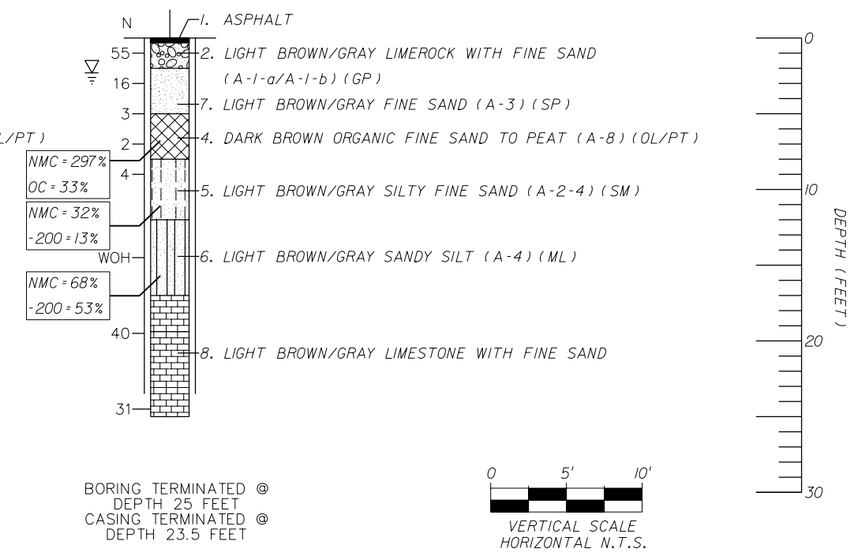

VERTICAL SCALE
HORIZONTAL N.T.S.

NOTES

- PLANE COORDINATE DATA AT THE SPT BORING LOCATION WAS OBTAINED USING A HAND HELD GPS INSTRUMENT (GARMIN 62STC). THE DATA IS ACCURATE TO WITHIN 15 FEET
- THE STATION AND OFFSET DATA IS REFERENCED TO S.R. AIA BASELINE AND WAS INTERPRETED USING THE SUPPLIED PLANS

N — NUMBERS TO THE LEFT OF BORINGS INDICATE SPT VALUE FOR 12" PENETRATION

▽ — WATER TABLE AT TIME OF DRILLING

|| || — 3-INCH DIAMETER CASING USED (NW)

DRILLED BY LUIS RODRIGUEZ (PSI)

OC — ORGANIC CONTENT (%)

-200 — PERCENTAGE PASSING NO. 200 SIEVE (%)

NMC — NATURAL MOISTURE CONTENT (%)

LEGEND

1. ASPHALT
2. LIGHT BROWN/GRAY LIMEROCK WITH FINE SAND (A-1-a/A-1-b) (GP)
3. LIGHT BROWN/GRAY FINE SAND WITH TRACES OF LIMEROCK (A-3) (SP)
4. DARK BROWN ORGANIC FINE SAND TO PEAT (A-8) (OL/PT)
5. LIGHT BROWN/GRAY SILTY FINE SAND (A-2-4) (SM)
6. LIGHT BROWN/GRAY SANDY SILT (A-4) (ML)
7. LIGHT BROWN/GRAY FINE SAND (A-3) (SP)
8. LIGHT BROWN/GRAY LIMESTONE WITH FINE SAND

GRANULAR MATERIALS - RELATIVE DENSITY	AUTOMATIC HAMMER SPT-N (BLOWS/12-INCH)
VERY LOOSE	LESS THAN 3
LOOSE	3-8
MEDIUM DENSE	8-24
DENSE	24-40
VERY DENSE	GREATER THAN 40
SILTS AND CLAYS CONSISTENCY	**AUTOMATIC HAMMER SPT-N (BLOWS/12-INCH)**
VERY SOFT	LESS THAN 1
SOFT	1-3
FIRM	3-6
STIFF	6-12
VERY STIFF	12-24
HARD	GREATER THAN 24

ENVIRONMENTAL CLASSIFICATION

SUBSTRUCTURES: EXTREMELY AGGRESSIVE (CHLORIDE > 6,000 ppm)
SUPERSTRUCTURES: EXTREMELY AGGRESSIVE

NOTE

THE INSTALATION OF THE MAST ARM FOUNDATIONS WILL REQUIRE AUGER DRILLING THROUGH THE LIMESTONE FORMATION. THEREFORE, THE CONTRACTOR SHOULD ANTICIPATE A HIGH RESISTANCE TO DRILLIG ACTIVITY. SPECIAL EQUIPMENT AND BREAKING TOOLS MAY BE REQUIRED.

SPT NOTES

HAMMER WEIGHT	140 LBS.
HAMMER DROP HEIGHT	30 INCHES
TYPE OF HAMMER	AUTOMATIC
SPOON INSIDE DIAMETER	1.500 INCH
SPOON INSIDE DIAMETER (AT OPENING)	1.375 INCH
SPOON OUTSIDE DIAMETER	2.000 INCH
TYPE OF RIG	CME 55

REVISIONS

DATE	DESCRIPTION	DATE	DESCRIPTION

PSI ENVIRONMENTAL GEOTECHNICAL CONSTRUCTION
7950 N.W. 64TH STREET, MIAMI, FL 33166
PHONE: (305) 471-7725 - FAX: (305) 593-1915
CERTIFICATE OF AUTHORIZATION No. 3684
ENGINEER OF RECORD: DHURUVA BADRI, P.E. No. 68718

STATE OF FLORIDA
DEPARTMENT OF TRANSPORTATION

ROAD NO.	COUNTY	FINANCIAL PROJECT ID
AIA	BROWARD	428727-1-52-01

REPORT OF CORE BORINGS

SHEET NO.
GT-4

NOTICE: THE OFFICIAL RECORD OF THIS SHEET IS THE ELECTRONIC FILE SIGNED AND SEALED UNDER RULE 61G15-23.003, F.A.C.

– S.R. A1A/SOUTH OCEAN DRIVE FROM COUNTY LINE ROAD TO SEACREST PARKWAY
(PSI PROJECT No. 0397–559, TWO #40)

BORING No.	MA-9
NORTHING	600190
EASTING	945280
STATION	35+77
OFFSET	34 RT.
DATE	03/19/13

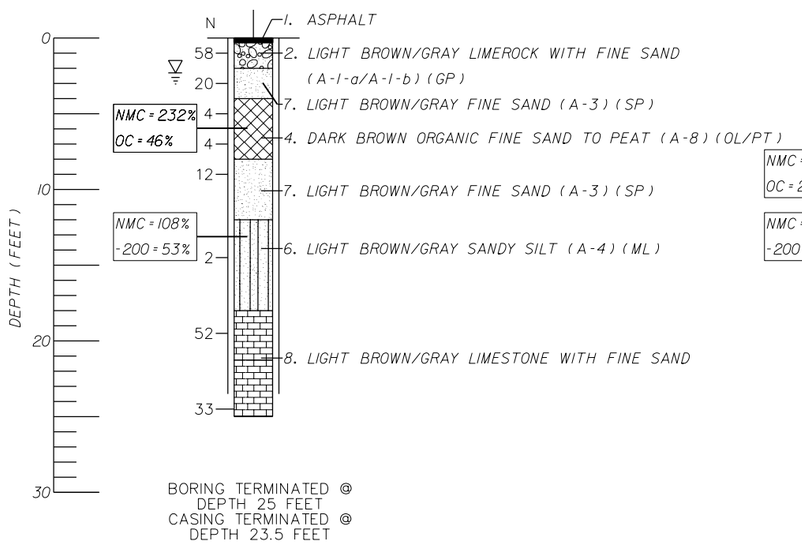

BORING No.	MA-10
NORTHING	600223
EASTING	945349
STATION	36+12
OFFSET	34 RT.
DATE	03/19/13

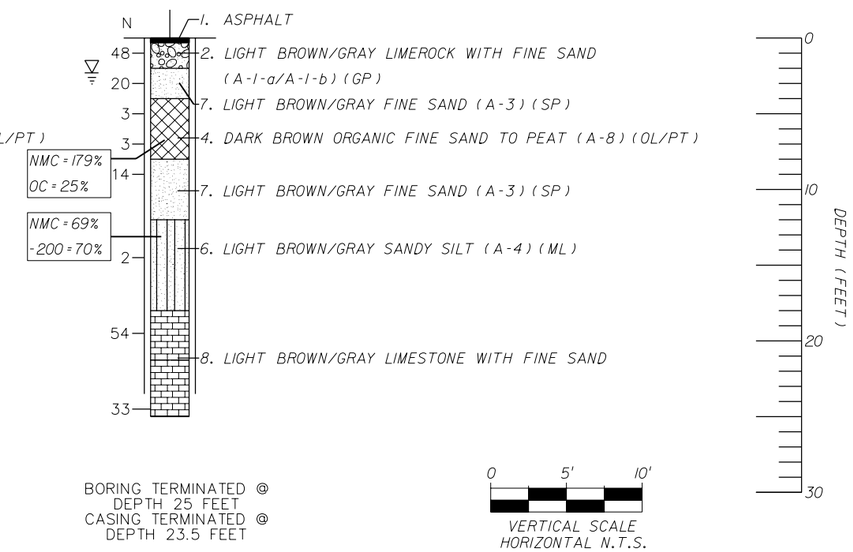

0 5' 10'
VERTICAL SCALE
HORIZONTAL N.T.S.

NOTES

- PLANE COORDINATE DATA AT THE SPT BORING LOCATION WAS OBTAINED USING A HAND HELD GPS INSTRUMENT (GARMIN 62STC). THE DATA IS ACCURATE TO WITHIN 15 FEET
- THE STATION AND OFFSET DATA IS REFERENCED TO S.R. A1A BASELINE AND WAS INTERPRETED USING THE SUPPLIED PLANS

N — NUMBERS TO THE LEFT OF BORINGS INDICATE SPT VALUE FOR 12" PENETRATION

▽ — WATER TABLE AT TIME OF DRILLING

|| || — 3-INCH DIAMETER CASING USED (NW)

DRILLED BY LUIS RODRIGUEZ (PSI)

OC — ORGANIC CONTENT (%)

-200 — PERCENTAGE PASSING NO. 200 SIEVE (%)

NMC — NATURAL MOISTURE CONTENT (%)

LEGEND

1. ASPHALT
2. LIGHT BROWN/GRAY LIMEROCK WITH FINE SAND (A-1-a/A-1-b) (GP)
3. LIGHT BROWN/GRAY FINE SAND WITH TRACES OF LIMEROCK (A-3) (SP)
4. DARK BROWN ORGANIC FINE SAND TO PEAT (A-8) (OL/PT)
5. LIGHT BROWN/GRAY SILTY FINE SAND (A-2-4) (SM)
6. LIGHT BROWN/GRAY SANDY SILT (A-4) (ML)
7. LIGHT BROWN/GRAY FINE SAND (A-3) (SP)
8. LIGHT BROWN/GRAY LIMESTONE WITH FINE SAND

NOTE

WOOD FRAGMENTS NOTED IN BORING MA-9, IN THE SAMPLE RECOVERED IN THE 4.0 TO 6.0 FOOT DEPTH INTERVAL.

ENVIRONMENTAL CLASSIFICATION

SUBSTRUCTURES: EXTREMELY AGGRESSIVE (CHLORIDE > 6,000 ppm)
SUPERSTRUCTURES: EXTREMELY AGGRESSIVE

NOTE

THE INSTALATION OF THE MAST ARM FOUNDATIONS WILL REQUIRE AUGER DRILLING THROUGH THE LIMESTONE FORMATION. THEREFORE, THE CONTRACTOR SHOULD ANTICIPATE A HIGH RESISTANCE TO DRILLIG ACTIVITY. SPECIAL EQUIPMENT AND BREAKING TOOLS MAY BE REQUIRED.

SPT NOTES

HAMMER WEIGHT	140 LBS.
HAMMER DROP HEIGHT	30 INCHES
TYPE OF HAMMER	AUTOMATIC
SPOON INSIDE DIAMETER	1.500 INCH
SPOON INSIDE DIAMETER (AT OPENING)	1.375 INCH
SPOON OUTSIDE DIAMETER	2.000 INCH
TYPE OF RIG	CME 55

GRANULAR MATERIALS - RELATIVE DENSITY	AUTOMATIC HAMMER SPT-N (BLOWS/12-INCH)
VERY LOOSE	LESS THAN 3
LOOSE	3-8
MEDIUM DENSE	8-24
DENSE	24-40
VERY DENSE	GREATER THAN 40
SILTS AND CLAYS CONSISTENCY	**AUTOMATIC HAMMER SPT-N (BLOWS/12-INCH)**
VERY SOFT	LESS THAN 1
SOFT	1-3
FIRM	3-6
STIFF	6-12
VERY STIFF	12-24
HARD	GREATER THAN 24

NOTICE: THE OFFICIAL RECORD OF THIS SHEET IS THE ELECTRONIC FILE SIGNED AND SEALED UNDER RULE 61G15-23.003, F.A.C.

REVISIONS			
DATE	DESCRIPTION	DATE	DESCRIPTION

PSI ENVIRONMENTAL GEOTECHNICAL CONSTRUCTION
7950 N.W. 64TH STREET, MIAMI, FL 33166
PHONE: (305) 471-7725 - FAX: (305) 593-1915
CERTIFICATE OF AUTHORIZATION No. 3684
ENGINEER OF RECORD: DHURUVA BADRI, P.E. No. 68718

STATE OF FLORIDA
DEPARTMENT OF TRANSPORTATION

ROAD NO.	COUNTY	FINANCIAL PROJECT ID
A1A	BROWARD	428727-1-52-01

REPORT OF CORE BORINGS

SHEET NO.
GT-5

STATE OF FLORIDA
DEPARTMENT OF TRANSPORTATION

CONTRACT PLANS

FINANCIAL PROJECT ID 428727-1-52-01
(FEDERAL FUNDS)
BROWARD COUNTY (86030)
STATE ROAD NO. A1A
SOUTH OCEAN DRIVE
FROM COUNTY LINE ROAD TO SEACREST PARKWAY

LIGHTING PLANS

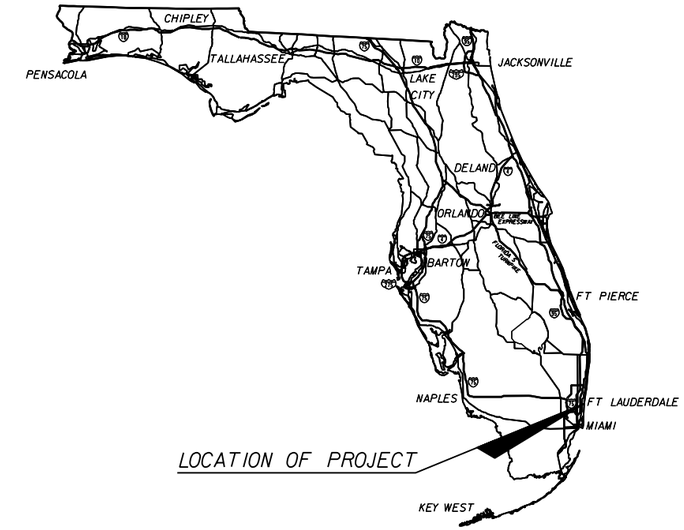

INDEX OF LIGHTING PLANS

SHEET NO.	SHEET DESCRIPTION
L-1	KEY SHEET
L-2	TABULATION OF QUANTITIES
L-3 & L-4	GENERAL NOTES
L-5	POLE DATA & LEGEND
L-6 THRU L-13	LIGHTING PLAN
L-14	SERVICE POINT DETAIL
L-15 & L-17	LIGHTING DETAIL
L-18	STRUCTURAL GENERAL NOTES
L-19	FOUNDATION NOTES
L-20	MICROPILE TABLE, NOTES & DETAILS
L-21	DRILLED SHAFT TABLE, NOTES & DETAILS
L-22	MICROPILE FOUNDATION
L-23	MICROPILE FOUNDATION REINFORCING BAR LIST
L-24	DRILLED SHAFT FOUNDATION
L-25	DRILLED SHAFT FOUNDATION REINF. BAR LIST (1 of 2)
L-26	DRILLED SHAFT FOUNDATION REINF. BAR LIST (2 of 2)
L-27 THRU L-36	LIGHT POLE LOCATION UTILITY DETAILS

LIGHTING SHOP DRAWINGS
TO BE SUBMITTED TO:

EDUARDO L. MARTINEZ, P.E.
APCTE, CORP.
10305 NW 41 STREET, SUITE 115
MIAMI, FLORIDA 33178

PLANS PREPARED BY:

A&P CONSULTING TRANSPORTATION
ENGINEERS CORPORATION
10305 N.W. 41 Street, Suite 115
Miami, FL 33178
(305) 592-7283 / fax: (305) 593-1594
Contract No.: C-9495
Vendor No.: 65-0770583
CA No.: EB-0007797

NOTE: THE SCALE OF THESE PLANS MAY
HAVE CHANGED DUE TO REPRODUCTION.

KEY SHEET REVISIONS	
DATE	DESCRIPTION

LIGHTING PLANS
ENGINEER OF RECORD: EDUARDO L. MARTINEZ, P.E.

P.E. NO.: 52023

FISCAL YEAR	SHEET NO.
14	L-1

FDOT PROJECT MANAGER: FAUSTO GOMEZ, P.E.

NOTICE: THE OFFICIAL RECORD OF THIS SHEET IS THE ELECTRONIC FILE SIGNED AND SEALED UNDER RULE 61G15-23.003, F.A.C.

PAY ITEM NO.	DESCRIPTION	UNIT	SHEET NUMBERS																				TOTAL THIS SHEET		GRAND TOTAL		REF. SHEET
			L-6		L-7		L-8		L-9		L-10		L-11		L-12		L-13										
			PLAN	FINAL	PLAN	FINAL	PLAN	FINAL	PLAN	FINAL	PLAN	FINAL	PLAN	FINAL	PLAN	FINAL	PLAN	FINAL	PLAN	FINAL	PLAN	FINAL	PLAN	FINAL	PLAN	FINAL	
630-2-12	CONDUIT, FURNISH & INSTALL, DIRECTIONAL BORE	LF	290		1152		1214		1255		1500		1120		1120		407						8058		8058		
635-2-11	PULL & SPLICE BOX, F&I 13" X 24" COVER SIZE	EA	2		7		4		5		11		8		5		3						45		45		
715-1-12	LIGHTING CONDUCTORS, F&I, INSULATED, NO.8-6	LF	870		3456		3642		3765		3966		3360		3360		1221						23640		23640		
715-4-600	LIGHT POLE COMPLETE, REMOVE	EA	2		2		4		3		2		3		6		3						25		25		
715-7-11	LOAD CENTER, F&I, SECONDARY VOLTAGE	EA									1												1		1		
715-10-5	LIGHT POLE FOUNDATION, REMOVE	EA															1						1		1		
715-500-1	POLE CABLE DISTRIBUTION SYSTEM, CONVENTIONAL	EA	2		6		4		4		7		8		4		3						38		38		
715-511-115	LIGHT POLE COMPLETE - SPECIAL DESIGN, F&I, SINGLE ARM SHOULDER MOUNT, ALUMINUM, 15'	EA	1		3						3		4										11		11		
715-512-140	LIGHT POLE COMPLETE - SPECIAL DESIGN, F&I, DOUBLE ARM SHOULDER MOUNT, ALUMINUM, 40'	EA	1		3		4		4		4		4		4		3						27		27		

PAY ITEM NOTES:

715-4-600: REMOVAL OF EXISTING CABLES SHALL BE INCLUDED WITHIN THIS PAY ITEM. CONDUIT TO BE ABANDONED IN PLACE.

715-511-115: THE ACTUAL LUMINAIRE MOUNTING HEIGHT FOR THIS PAY ITEM IS 12'. REFER TO SHEET L-17 FOR DETAILS.

715-512-140: THIS PAY ITEM SHALL INCLUDE AN 8' ARM WITH LUMINAIRE AND 4' ARM WITH LUMINAIRE MOUNTED AT 40' & 22' RESPECTIVELY. REFER TO SHEET L-16 FOR DETAILS.

NOTICE: THE OFFICIAL RECORD OF THIS SHEET IS THE ELECTRONIC FILE SIGNED AND SEALED UNDER RULE 61G15-23.003, F.A.C.

REVISIONS			
DATE	DESCRIPTION	DATE	DESCRIPTION

A&P Consulting Transportation Engineers Corp.
10305 N.W. 41 Street, suite 115
Miami, FL 33178
(305) 592-7283 / fax: (305) 593-1594
CA No. : EB-0007797
Eduardo L. Martinez, P.E. No. 52023

STATE OF FLORIDA
DEPARTMENT OF TRANSPORTATION

ROAD NO.	COUNTY	FINANCIAL PROJECT ID
A1A	BROWARD	428727-1-52-01

TABULATION OF QUANTITIES

SHEET NO. L-2

LIGHTING NOTES

1. GOVERNING STANDARDS AND SPECIFICATIONS ARE: THE NATIONAL ELECTRICAL SAFETY CODE OR LATER EDITION AND LOCAL CODES WHICH EXCEED THESE SPECIFICATIONS.

2. ENDS OF CONDUITS SHALL BE SEALED WITH POLYURETHANE FOAM SEAL AFTER WIRING IS COMPLETE. FOAM SEAL SHALL NOT BE USED AS A MEANS TO PROTECT CONDUCTORS FROM ABRASION IN RACEWAYS. GALVANIZED RIGID METAL CONDUIT SHALL HAVE PROPER FITTINGS TO PROTECT CONDUCTORS FROM ABRASION.

3. DEVICE SUPPORT IN PULL BOXES: THE PREFERRED METHOD OF ATTACHMENT OF LIGHTNING ARRESTERS AND OTHER DEVICES LIKELY TO BE SUPPORTED IN PULL BOXES, IS BY MEANS OF A SELF-TAPPING SCREW OR BY A MASONRY SCREW. CARE SHOULD BE EXERCISED WHEN UTILIZING THIS METHOD NOT TO BREAK THE SUPPORTING TABS; SCREWS SHOULD BE FIRM BUT NOT SNUG AGAINST THE SUPPORTING TABS. OTHER APPROVED AND LISTED METHODS MAY BE USED, IF THEY ARE FOUND SUITABLE FOR THE CONDITIONS.

4. SPLICES AND CONNECTIONS MADE IN PULL BOXES SHALL BE ACCOMPLISHED WITH THE USE OF GEL CAPS. WHERE SPLICING OF 3 OR 4 FEEDER CABLES IS NEEDED, USE GEL TAP SPLICE KITS.

5. SLUGS: WHERE THE POLE CABLE DISTRIBUTION IS EMPLOYED (MG SQUARE, DOT 3) AND WHERE THE POWER SOURCE IS GROUNDED TYPE (GROUNDED NEUTRAL CONDUCTOR), EXAMPLE 480 VAC TO GROUND, A SLUG SHALL BE INSERTED IN THE GROUNDED (NEUTRAL SIDE) REPLACING THE FACTORY INSTALLED FUSE, IN THE MALE DISTRIBUTION PLUG AT THE TIME OF INSTALLATION.

6. WHERE THE POLE CABLE DISTRIBUTION SYSTEM IS EMPLOYED (MG SQUARE, DOT 3), GROUNDING CONNECTIONS TO THE DISTRIBUTION BLOCK AND LIGHTNING ARRESTER OR OTHER DEVICES CONTAINING LEADS SMALLER THAN # 8 AWG, SHALL BE DONE BY MECHANICAL CONNECTIONS OR OTHER APPROVED MEANS.

7. GROUND CONDUCTOR SHALL HAVE A GREEN JACKET, TYPE THW OR THWN, AND SHALL NOT BE SMALLER THAN NO. 6 AWG. IF CONDUCTORS ARE LARGER THAN NO. 6 AWG THEN THE GROUND CONDUCTOR SHALL BE SIZED IN ACCORDANCE WITH THE NATIONAL ELECTRICAL CODE.

8. THE CONTRACTOR SHALL CHECK THE CONTINUITY OF GROUNDING CONDUCTOR USING MEGGER OR EQUAL LOW RESISTANCE/HIGH CAPACITY OHMMETER CALIBRATED WITH THE PAST 180 DAYS. A NEUTRAL/GROUND LOOP RESISTANCE OF MORE THAN 0.5 OHMS-PER THOUSAND FEET SHALL BE CONSIDERED INADEQUATE.

9. CONCRETE PULL BOX SHALL HAVE EXTERIOR DIMENSIONS OF 27-1/2" X 18" X 12". POLYMER CONCRETE PULL BOX REINFORCED BY HEAVY-WEAVE FIBERGLASS SHALL HAVE EXTERIOR DIMENSIONS OF 25" X 15-1/2" X 12". COVERS SHALL BE OF HEAVY-DUTY POLYMER COMPOSITE AND LABELED WITH "STREET LIGHTING".

10. ONLY LINE CONDUCTORS WILL BE PERMITTED IN SERVICE PULL BOX. NO GROUND RODS OR ANY OTHER ITEMS OR DEVICES SHALL BE ALLOWED.

11. THE POLE FOUNDATION CONDUITS SHALL EXTEND FROM 1" TO 2" INSIDE THE POLE BASE.

12. RACEWAYS: RACEWAYS CONTAINING #4 AWG OR LARGER CONDUCTORS MUST BE PROTECTED BY AN INSULATING FITTING, UNLESS THE CONDUCTORS ARE SEPARATED FROM THE FITTING OR RACEWAY BY SUBSTANTIAL INSULATING MATERIAL THAT IS SECURELY FASTENED IN PLACE.

13. POLE CABLE DISTRIBUTION SYSTEM USED SHALL BE (MG SQUARE DOT 3), AND SPLICING DEVICE SHALL BE THE MOLDED SPLICE KIT TYCO-RAYCHEM CATALOG # GELCAP-SL-2/0-3 HOLE. WHERE CONVENTIONAL WIRING SYSTEMS ARE EMPLOYED OR THE EXISTING POLES ARE UTILIZED, CONDUCTORS SHALL BE SO ROUTED AND COORDINATED AS TO TERMINATE ON THE LINE SIDE OF THE FUSE-HOLDERS (HEB'S & HEBR'S). PULL BOXES CONTAINING # 4 AWG OR LARGER CONDUCTORS CONTAINING SPLICES OR U PULLS, THE DISTANCE BETWEEN RACEWAYS SHALL BE INCREASED. THE DISTANCE BETWEEN RACEWAYS SHALL BE INCREASED SIX TIMES THE TRADE SIZE DIAMETER OF THE LARGEST RACEWAY.

14. ALL CONDUCTORS SHALL BE TYPE USE/RHW-XLP AS SPECIFIED IN THE FDOT SPECIFICATION SECTION 992. OTHER TYPE OF CABLE IS NOT ALLOWED (EXCEPT GROUND WIRE WHICH SHALL BY TYPE THW OR THWN.

15. THE CONTRACTOR IS RESPONSIBLE TO PAY THE POWER COMPANY THE COST OF PROVIDING ELECTRICITY TO THE TEMPORARY AND PROPOSED LIGHTING FROM THE MOMENT THE EXISTING SERVICE IS DISCONNECTED UNTIL FINAL ACCEPTANCE OF THE NEW LIGHTING BY THE MAINTAINING AGENCY. COST TO BE INCLUDED IN PAY ITEM 102-1 MAINTENANCE OF TRAFFIC.

16. PRIOR TO ANY PROCUREMENT ORDER THE CONTRACTOR SHALL SUBMIT FOR APPROVAL, EQUIPMENT SPECIFICATIONS OR DESIGN DATA FOR ALL MATERIALS PROPOSED FOR THE PROJECT AND SHALL INCLUDE, BUT NOT LIMITED TO:

    A. SHOP DRAWINGS FOR THE LUMINIARIES, POLES AND BASES.

    B. CONDUCTORS, CONDUIT, GROUND RODS AND PULL BOXES.

    C. FUSES, FUSE HOLDERS, SURGE PROTECTORS AND POLE CABLE DISTRIBUTION SYSTEMS.

    D. SAFETY SWITCHES, PANELS, CIRCUIT BREAKERS, AND OTHER MAJOR SERVICE POINT COMPONENTS.

17. SPARE CONDUIT SHALL BE PLACED AT ALL PAVEMENT CROSSINGS, SPARE CONDUIT SHALL BE TERMINATED AT PULL BOXES, SHALL BE CAPPED AND SEALED AT BOTH ENDS.

18. THE LOCATIONS OF EXISTING UTILITIES, AS SHOWN ON THESE PLANS, ARE APPROXIMATE AND BASED ON THE INFORMATION FURNISHED TO THE ENGINEER BY THE UTILITY OWNER(S) AND ARE SHOWN AS NOTICE TO THE CONTRACTOR THAT UNDERGROUND UTILITIES EXIST. BEFORE EXCAVATION THE CONTRACTOR SHALL NOTIFY THE UTILITY COMPANY OWNER(S) AND REQUEST THEM TO LOCATE AND STAKE THEIR UNDERGROUND FACILITIES. UTILITIES ARE TO BE ADJUSTED BY OTHERS AS DIRECTED BY THE ENGINEER.

19. POLE POSITIONS AND CONDUIT ROUTING MAY BE ADJUSTED, AS APPROVED BY THE ENGINEER, TO PREVENT CONFLICTS WITH UTILITY AND DRAINAGE STRUCTURES NOT INDICATED AND UNDERGROUND LIGHTING CIRCUITS.

20. LIGHTING ARRESTORS MUST BE INSTALLED BY THE PROVISIONS OF ARTICLE 280 OF NFPA 70 (NATIONAL ELECTRIC CODE). PROVISION MUST BE MADE TO CONNECT THESE LEADS TO THE CIRCUIT WIRING; EXAMPLE: POLARIS TAPS. TERMINALS OF SWITCHES ARE USUALLY LISTED FOR ONE CONDUCTOR ONLY. PREFERABLY, THE SURGE CAPACITOR SHOULD BE INSTALLED ON THE LINE SIDE OF THE SWITCH AND THE SURGE ARRESTOR ON THE LOAD SIDE.

21. ALL CONDUIT TRENCHES SHALL BE BACKFILLED COMPLETELY TO PROVIDE SAFE CROSSING BY THE END OF EACH WORKING DAY OR WHENEVER THE WORK ZONE BECOMES INACTIVE. THE CONTRACTOR SHALL NOT OPEN ANY AREA THAT CAN NOT BE BACKFILLED IN THE SAME DAY/NIGHT OPERATION.

22. CONTRACTOR MUST MAINTAIN THE EXISTING LIGHTING SYSTEM IN OPERATION OR SUPPLY A TEMPORARY ONE UNTIL THE NEW LIGHTING SYSTEM CAN BE ACTIVATED.

23. NEUTRAL WIRES TO HAVE WHITE INSULATION.

24. DELIVERY LOCATION OF ALL SALVAGEABLE LIGHTING EQUIPMENT SHALL BE COORDINATED WITH THE CITY OF HALLANDALE BEACH. COST OF DELIVERY OF SALVAGEABLE LIGHTING EQUIPMENT TO BE INCLUDED IN THE RELATED REMOVAL ITEM.

NOTICE: THE OFFICIAL RECORD OF THIS SHEET IS THE ELECTRONIC FILE SIGNED AND SEALED UNDER RULE 61G15-23.003, F.A.C.

LIGHTING NOTES (CONTINUED)

25. UTILITY OWNERS:

COMPANY	TELEPHONE NUMBERS	CONTACT PERSON
ATLANTIC COMMUNICATIONS	(305) 861-8069 EXT. 3204	DAVID MCBRIDE
AT&T DISTRIBUTION	(954) 309-0753	OTIS KEEVE
BROWARD COUNTY TRAFFIC ENGINEERING DEPARTMENT (BCTED)	(954) 847-2725	GREG LOVAGLIO
BCTED (COPPER INTERCONNECT CABLE)	(954) 847-2752	MIGUEL MORGADO
BCTED (FIBER OPTIC CABLE)	(954) 847-2745	ROBERT BLOUNT
BROWARD COUNTY WATER	(954) 553-6137	DAVID J. O'CONNOR
CITY OF HALLANDALE BEACH	(954) 457-1617	RAISA ZELDIS
CITY OF HOLLYWOOD UTILITIES	(561) 791-9280	GREG JEFFRIES
COMCAST	(954) 447-8408	CHUCK HUSTON
FPL-DISTRIBUTION	(954) 401-4584	BYRON SAMPLE
FPL-TRANSMISSION	(561) 694-4060	GEORGE J. BECK
HOTWIRE COMMUNICATIONS	(954) 628-7022	PHIL GALLUB
MIAMI-DADE COUNTY PUBLIC WORKS	(305) 592-8925 EXT. 258	AURELIO DEL VALLE
MIAMI-DADE WATER & SEWER	(786) 268-5255	PATRICK CHONG
TECO PEOPLES GAS	(954) 453-0812	MAX CHAMORRO
CITY OF NORTH MIAMI BEACH	(305) 948-2980	TARIM ROSSY

Always call 811 two full business days before you dig

Sunshine811.com

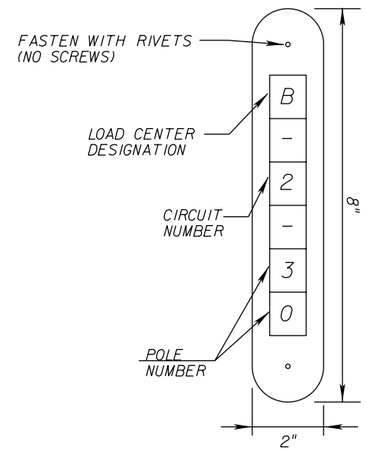

FDOT POLE IDENTIFICATION TAG DETAIL

(SEE NOTES)

NOTES:

1-FURNISH AND INSTALL AN ALUMINUM IDENTIFICATION TAG ON EACH ROADWAY LIGHTING STANDARD. TAGS SHALL BE 2" X 8" IN SIZE WITH BLACK LETTERS ON YELLOW BACKGROUND, ATTACHED WITH RIVETS (NO SCREWS). NUMBERS SHALL BE AS SHOWN ON THE POLE IDENTIFICATION TAG DETAIL. TAG SHALL BE PLACED 5' ABOVE GRADE

2-THE CONTRACTOR SHALL CONTACT THE FDOT DISTRICT 4 ENGINEER FOR PROPER CIRCUIT NUMBERS TO KEEP IN SEQUENCE WITH EXISTING SYSTEM

3-LIGHTING POLE ID TAG SHALL BE PLACED IN FRONT OF THE POLE FACING THE TRAFFIC.

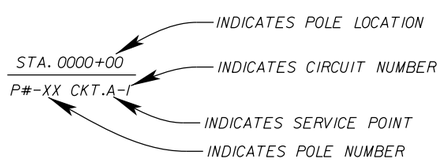

LIGHT POLE PLANS IDENTIFICATION FORMAT

NOTICE: THE OFFICIAL RECORD OF THIS SHEET IS THE ELECTRONIC FILE SIGNED AND SEALED UNDER RULE 61G15-23.003, F.A.C.

REVISIONS			
DATE	DESCRIPTION	DATE	DESCRIPTION

A&P Consulting Transportation Engineers Corp.
10305 N.W. 41 Street, suite 115
Miami, FL 33178
(305) 592-7283 / fax: (305) 593-1594
CA No. : EB-0007797
Eduardo L. Martinez, P.E. No. 52023

STATE OF FLORIDA
DEPARTMENT OF TRANSPORTATION

ROAD NO.	COUNTY	FINANCIAL PROJECT ID
A1A	BROWARD	428727-1-52-01

GENERAL NOTES

SHEET NO. L-4

POLE DATA

POLE NO.	CIRCUIT	STATION	DIST. OR ARM	LUMINAIRE WATTAGE	MOUNTING HEIGHT	POLE SETBACK	PAY ITEM
SR AIA/S. OCEAN DRIVE SOUTHBOUND							
1	A-1	STA. 12+87 LT	2'-4"	150W	12'	48.7' LT	715-511-115
2	A-1	STA. 14+91 LT	2'-4"	150W	12'	48.8' LT	715-511-115
3	A-1	STA. 17+31 LT	2'-4"	150W	12'	48.8' LT	715-511-115
4	A-1	STA. 18+80 LT	2'-4"	150W	12'	48.5' LT	715-511-115
5	A-1	STA. 20+88 LT	4'/8'	150W/400W	22'/40'	48.8' LT	715-512-140
6	A-1	STA. 24+23 LT	4'/8'	150W/400W	22'/40'	48.5' LT	715-512-140
7	A-1	STA. 27+16 LT	4'/8'	150W/400W	22'/40'	48.9' LT	715-512-140
8	A-1	STA. 29+33 LT	4'/8'	150W/400W	22'/40'	51.3' LT	715-512-140
9	A-1	STA. 32+00 LT	4'/8'	150W/400W	22'/40'	67.4' LT	715-512-140
10	A-1	STA. 33+15 LT	2'-4"	150W	12'	56.0' LT	715-511-115
11	A-1	STA. 34+19 LT	2'-4"	150W	12'	47.7' LT	715-511-115
12	A-2	STA. 35+20 LT	2'-4"	150W	12'	48.8' LT	715-511-115
13	A-2	STA. 36+47 LT	2'-4"	150W	12'	48.8' LT	715-511-115
14	A-2	STA. 37+62 LT	2'-4"	150W	12'	47.7' LT	715-511-115
15	A-2	STA. 38+37 LT	2'-4"	150W	12'	48.8' LT	715-511-115
16	A-2	STA. 39+49 LT	2'-4"	150W	12'	48.8' LT	715-511-115
17	A-2	STA. 41+49 LT	4'/8'	150W/400W	22'/40'	48.7' LT	715-512-140
18	A-2	STA. 43+44 LT	4'/8'	150W/400W	22'/40'	48.7' LT	715-512-140
19	A-2	STA. 45+87 LT	4'/8'	150W/400W	22'/40'	48.7' LT	715-512-140
20	A-2	STA. 47+92 LT	4'/8'	150W/400W	22'/40'	48.8' LT	715-512-140
SR AIA/S. OCEAN DRIVE NORTHBOUND							
21	A-3	STA. 11+56 RT	4'/8'	150W/400W	22'/40'	48.7' RT	715-512-140
22	A-3	STA. 13+95 RT	4'/8'	150W/400W	22'/40'	48.7' RT	715-512-140
23	A-3	STA. 15+97 RT	4'/8'	150W/400W	22'/40'	48.7' RT	715-512-140
24	A-3	STA. 18+03 RT	4'/8'	150W/400W	22'/40'	48.8' RT	715-512-140
25	A-3	STA. 19+54 RT	4'/8'	150W/400W	22'/40'	48.7' RT	715-512-140
26	A-3	STA. 22+57 RT	4'/8'	150W/400W	22'/40'	48.7' RT	715-512-140
27	A-3	STA. 25+80 RT	4'/8'	150W/400W	22'/40'	48.7' RT	715-512-140
28	A-3	STA. 28+06 RT	4'/8'	150W/400W	22'/40'	48.6' RT	715-512-140
29	A-3	STA. 30+60 RT	4'/8'	150W/400W	22'/40'	48.7' RT	715-512-140
30	A-3	STA. 32+10 RT	4'/8'	150W/400W	22'/40'	48.7' RT	715-512-140
31	A-4	STA. 34+34 RT	4'/8'	150W/400W	22'/40'	48.4' RT	715-512-140
32	A-4	STA. 36+54 RT	4'/8'	150W/400W	22'/40'	48.7' RT	715-512-140
33	A-4	STA. 38+42 RT	4'/8'	150W/400W	22'/40'	48.7' RT	715-512-140
34	A-4	STA. 40+86 RT	4'/8'	150W/400W	22'/40'	64.0' RT	715-512-140
35	A-4	STA. 43+04 RT	4'/8'	150W/400W	22'/40'	69.5' RT	715-512-140
36	A-4	STA. 45+46 RT	4'/8'	150W/400W	22'/40'	84.0' RT	715-512-140
37	A-4	STA. 48+17 RT	4'/8'	150W/400W	22'/40'	80.4' RT	715-512-140
38	A-4	STA. 49+97 RT	4'/8'	150W/400W	22'/40'	74.9' RT	715-512-140

NOTES:

1. FOR POLE FOUNDATION REFER TO SHEETS L-18 TO L-26.
2. FOR RESOLUTION OF CONFLICTS WITH UTILITIES REFER TO SHEETS L-27 TO L-36.

LEGEND

SYMBOLS	DESCRIPTION
	HOLOPHANE ESPLANADE TEAR DROP SERIES 400 WATT HIGH PRESSURE SODIUM LUMINAIRE DESIGNED FOR SHORT CUTOFF TYPE III DISTRIBUTION. MAGNETIC REGULATOR (MAG-REG) TYPE BALLAST WIRED FOR 480 VOLT OPERATION. POLE MOUNTING HEIGHT 40 FT. CATALOG NO. ESU-400HP-48-B-4. ESPLANADE PEDESTRIAN TEAR DROP SERIES 150 WATT HIGH PRESSURE SODIUM LUMINAIRE DESIGNED FOR SHORT CUTOFF TYPE IV DISTRIBUTION. HIGH REACTANCE AUTOTRANSFORMER (HX) TYPE BALLAST WIRED FOR 480 VOLT OPERATION. POLE MOUNTING HEIGHT 22 FT. CATALOG NO. ESP-15AHP-48-B-4. FOR DETAILS, REFER TO SHEET L-16.
	HOLOPHANE ESPLANADE PEDESTRIAN TEAR DROP SERIES 150 WATT HIGH PRESSURE SODIUM LUMINAIRE DESIGNED FOR SHORT CUTOFF TYPE IV DISTRIBUTION. HIGH REACTANCE AUTOTRANSFORMER (HX) TYPE BALLST WIRED FOR 480 VOLT OPERATION. POLE MOUNTING HEIGHT 12 FT. CATALOG NO. ESP-15AHP-48-B-4. FOR DETAILS, REFER TO SHEET L-17.
	EXISTING BRACKET & LUMINAIRE ATTACHED TO FPL POLE TO BE REMOVED BY FPL.
	EXISTING POLE AND LUMINAIRE TO BE REMOVED.
	2" SCHEDULE 40 PVC CONDUIT WITH USE/RHW-XLP CONDUCTORS INSIDE (CONDUIT AND CONDUCTOR SIZE AS SHOWN ON PLAN SHEETS). RUN ONE (1) 6 AWG COOPER BOND CONDUCTOR (THW OR THWN GREEN INSULATION) INSIDE CONDUIT WITH OTHER CONDUCTORS. FOR DETAILS, REFER TO SHEET L-15.
	PULL BOX. FOR SPECIFICATIONS SEE SECTION 635 OF STANDARD SPECIFICATIONS FOR ROAD AND BRIDGE CONSTRUCTION.
	LOAD CENTER. FOR ELECTRICAL AND MOUNTING DETAILS REFER TO SHEET L-14.

CONVENTIONAL LIGHTING DESIGN CRITERIA

Average Initial Intensity	1.5 Foot Candles
Uniformity Ratio Avg./Min.	4:1 Or Less
Max./Min.	10:1 Or Less
Wind Speed	150 MPH

NOTICE: THE OFFICIAL RECORD OF THIS SHEET IS THE ELECTRONIC FILE SIGNED AND SEALED UNDER RULE 61G15-23.003, F.A.C.

REVISIONS			
DATE	DESCRIPTION	DATE	DESCRIPTION

A&P Consulting Transportation Engineers Corp.
10305 N.W. 41 Street, suite 115
Miami, FL 33178
(305) 592-7283 / fax: (305) 593-1594
CA No. : EB-0007797
Eduardo L. Martinez, P.E. No. 52023

STATE OF FLORIDA
DEPARTMENT OF TRANSPORTATION

ROAD NO.	COUNTY	FINANCIAL PROJECT ID
AIA	BROWARD	428727-1-52-01

POLE DATA & LEGEND

SHEET NO. L-5

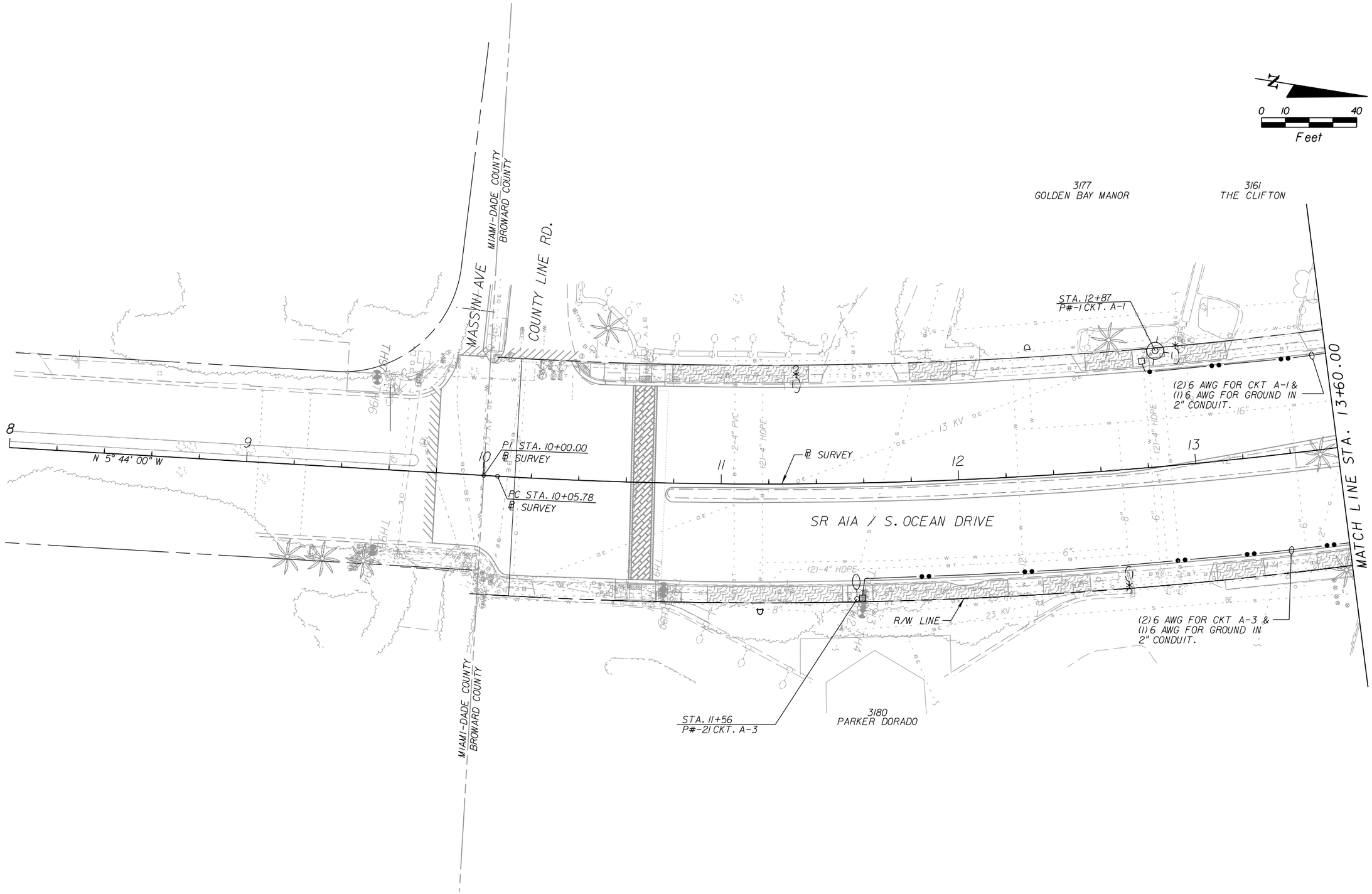

REVISIONS			
DATE	DESCRIPTION	DATE	DESCRIPTION

A&P Consulting Transportation Engineers Corp.
10305 N.W. 41 Street, suite 115
Miami, FL 33178
(305) 592-7283 / fax: (305) 593-1594
CA No. : EB-0007797
Eduardo L. Martinez, P.E. No. 52023

STATE OF FLORIDA
DEPARTMENT OF TRANSPORTATION

ROAD NO.	COUNTY	FINANCIAL PROJECT ID
AIA	BROWARD	428727-1-52-01

LIGHTING PLAN

SHEET NO.
L-6

emslerra 12/4/2013 5:39:54 PM H:\e\Projects\428727152011\lighting\plan1101.dgn

NOTICE: THE OFFICIAL RECORD OF THIS SHEET IS THE ELECTRONIC FILE SIGNED AND SEALED UNDER RULE 61G15-23.003, F.A.C.

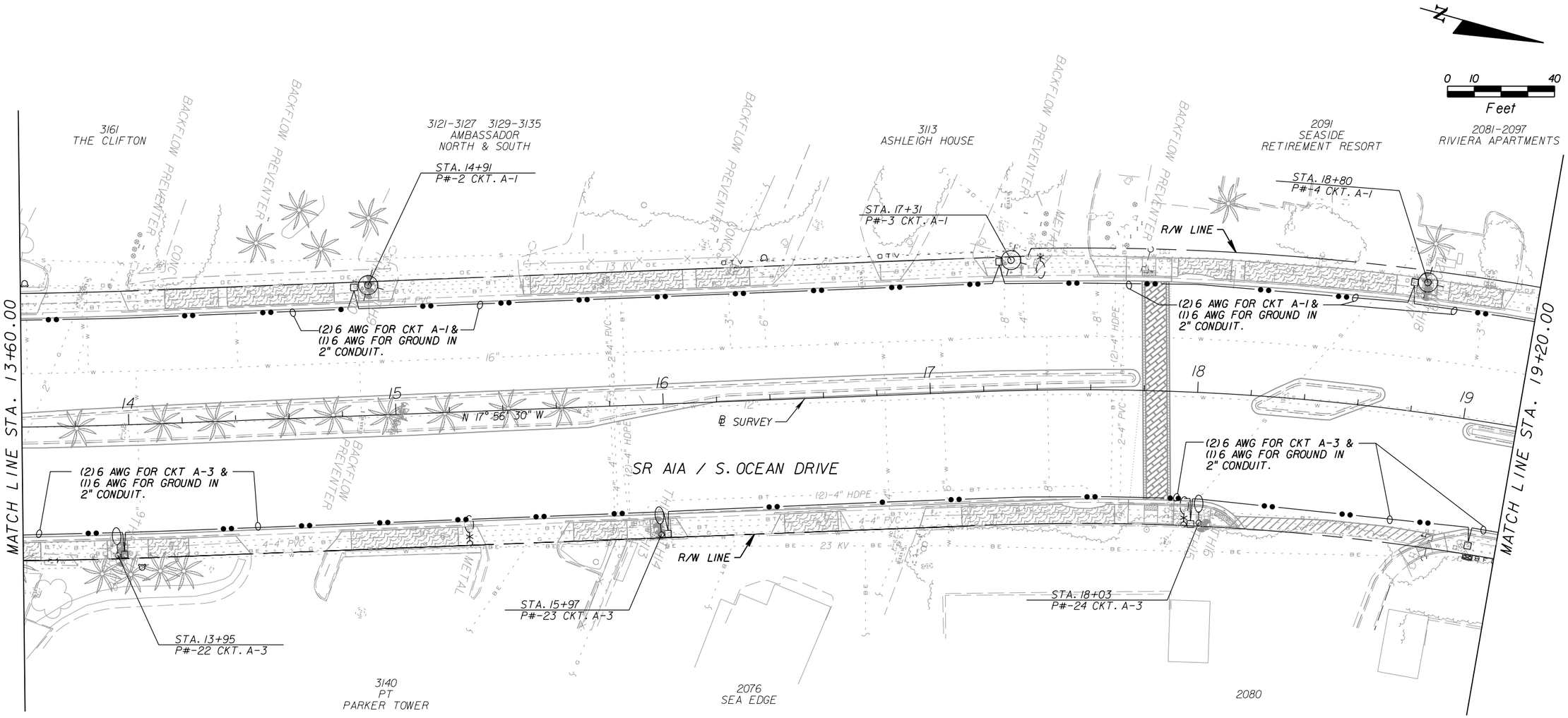

NOTICE: THE OFFICIAL RECORD OF THIS SHEET IS THE ELECTRONIC FILE SIGNED AND SEALED UNDER RULE 61G15-23.003, F.A.C.

REVISIONS			
DATE	DESCRIPTION	DATE	DESCRIPTION

A&P Consulting Transportation Engineers Corp.
10305 N.W. 41 Street, suite 115
Miami, FL 33178
(305) 592-7283 / fax: (305) 593-1594
CA No. : EB-0007797
Eduardo L. Martinez, P.E. No. 52023

STATE OF FLORIDA
DEPARTMENT OF TRANSPORTATION

ROAD NO.	COUNTY	FINANCIAL PROJECT ID
AIA	BROWARD	428727-1-52-01

LIGHTING PLAN

SHEET NO.
L-7

emsierra 12/2/2013 7:11:26 PM H:\e\Projects\428727152011\lighting\plan102.dgn

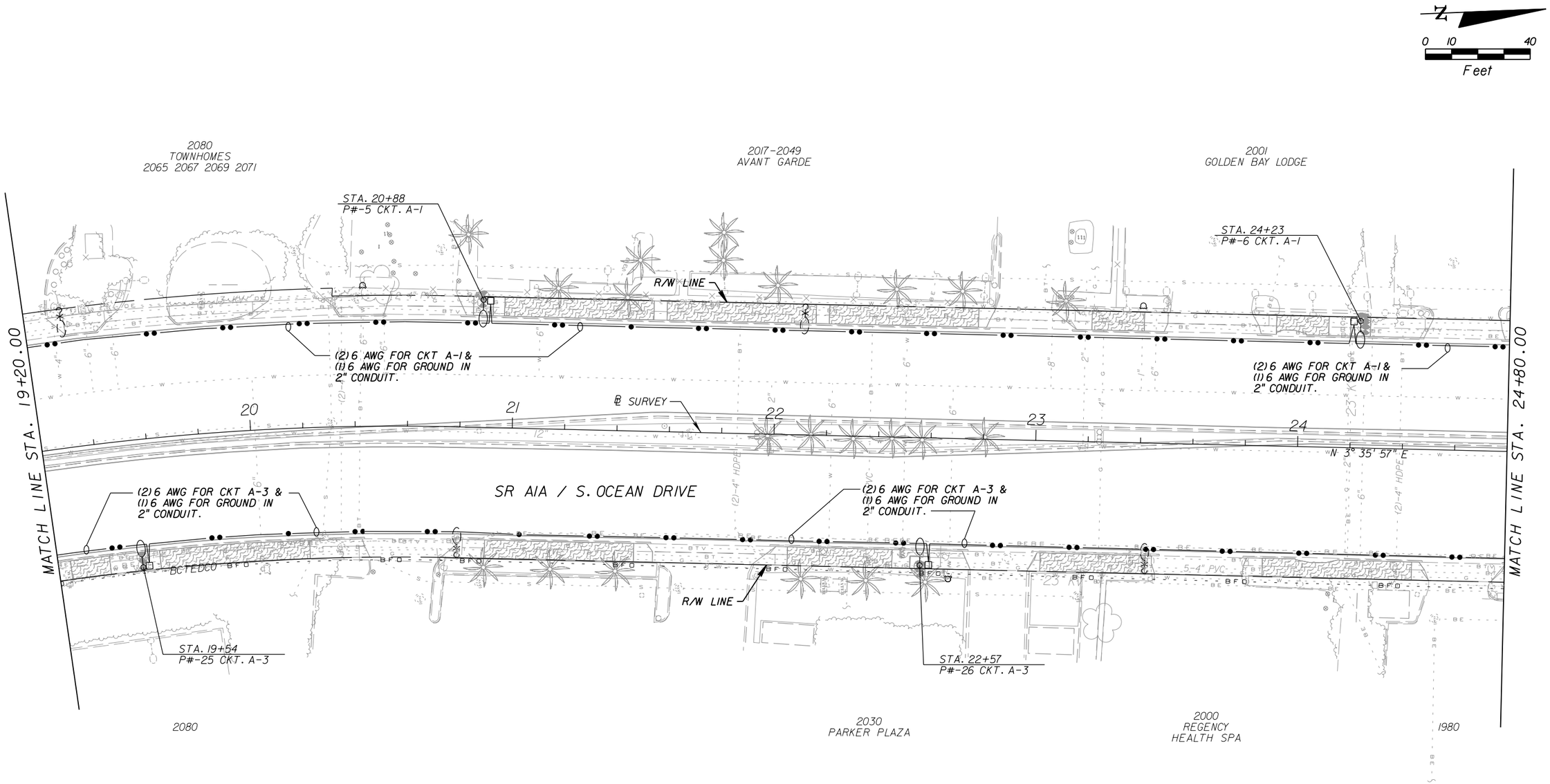

NOTICE: THE OFFICIAL RECORD OF THIS SHEET IS THE ELECTRONIC FILE SIGNED AND SEALED UNDER RULE 61G15-23.003, F.A.C.

REVISIONS			
DATE	DESCRIPTION	DATE	DESCRIPTION

A&P Consulting Transportation Engineers Corp.
10305 N.W. 41 Street, suite 115
Miami, FL 33178
(305) 592-7283 / fax: (305) 593-1594
CA No. : EB-0007797
Eduardo L. Martinez, P.E. No. 52023

STATE OF FLORIDA
DEPARTMENT OF TRANSPORTATION

ROAD NO.	COUNTY	FINANCIAL PROJECT ID
AIA	BROWARD	428727-1-52-01

LIGHTING PLAN

SHEET NO.
L-8

emslerra 12/2/2013 7:11:28 PM H:\e\Projects\4287271520101\lighting\plan1103.dgn

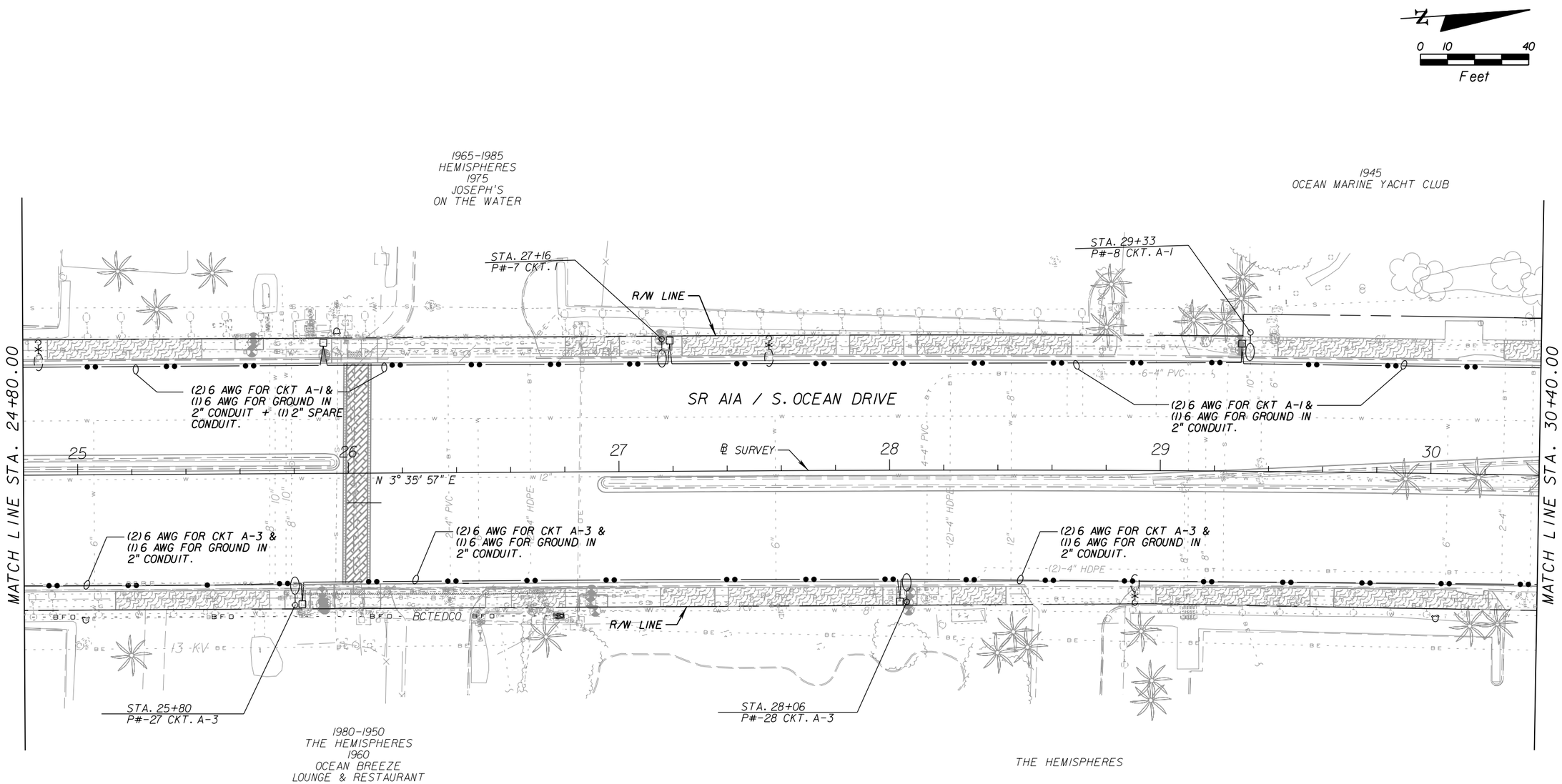

NOTICE: THE OFFICIAL RECORD OF THIS SHEET IS THE ELECTRONIC FILE SIGNED AND SEALED UNDER RULE 61G15-23.003, F.A.C.

REVISIONS			
DATE	DESCRIPTION	DATE	DESCRIPTION

A&P Consulting Transportation Engineers Corp.
10305 N.W. 41 Street, suite 115
Miami, FL 33178
(305) 592-7283 / fax: (305) 593-1594
CA No. : EB-0007797
Eduardo L. Martinez, P.E. No. 52023

STATE OF FLORIDA
DEPARTMENT OF TRANSPORTATION

ROAD NO.	COUNTY	FINANCIAL PROJECT ID
AIA	BROWARD	428727-1-52-01

LIGHTING PLAN

SHEET NO.
L-9

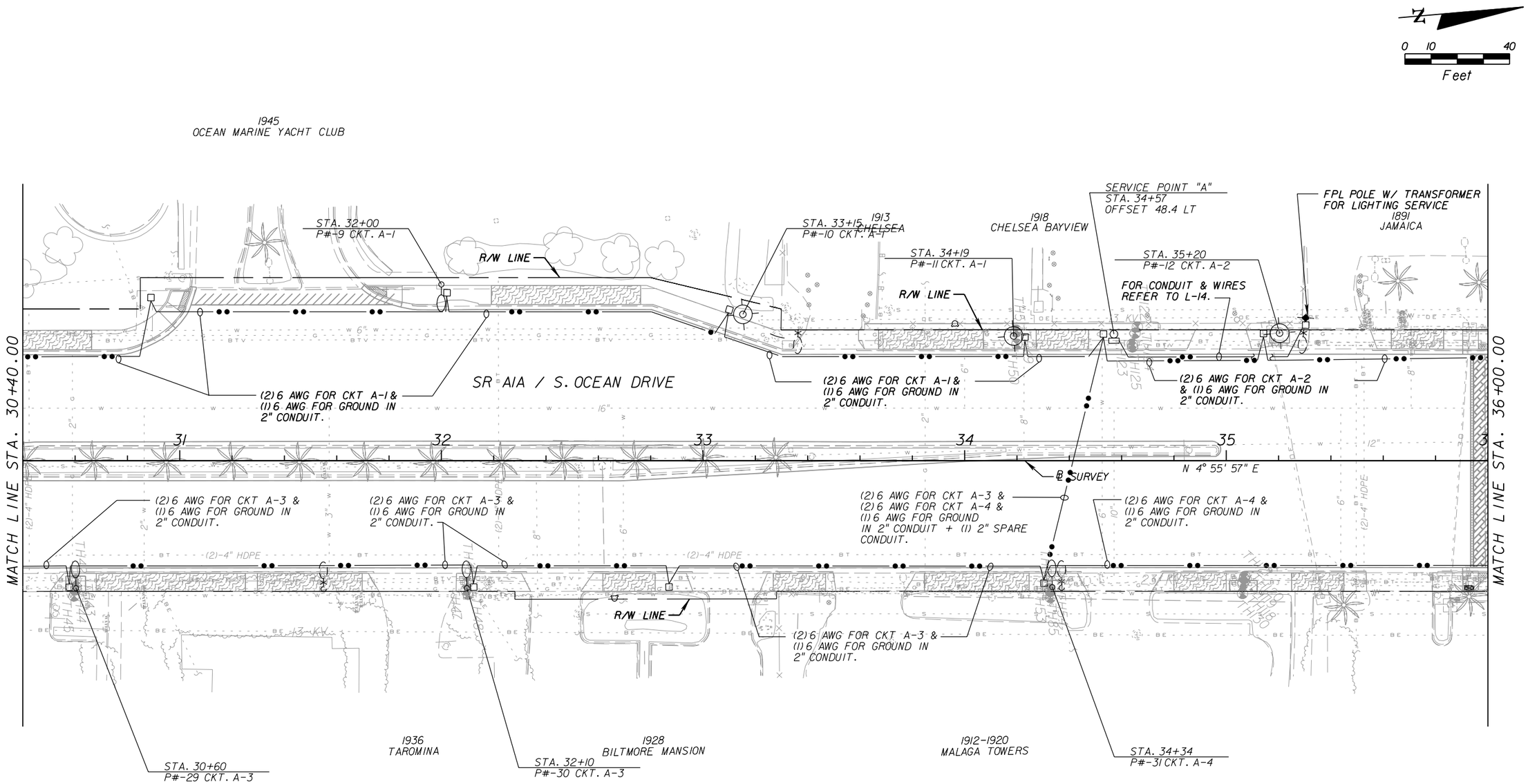

NOTICE: THE OFFICIAL RECORD OF THIS SHEET IS THE ELECTRONIC FILE SIGNED AND SEALED UNDER RULE 61G15-23.003, F.A.C.

REVISIONS			
DATE	DESCRIPTION	DATE	DESCRIPTION

A&P Consulting Transportation Engineers Corp.
10305 N.W. 41 Street, suite 115
Miami, FL 33178
(305) 592-7283 / fax: (305) 593-1594
CA No. : EB-0007797
Eduardo L. Martinez, P.E. No. 52023

STATE OF FLORIDA
DEPARTMENT OF TRANSPORTATION

ROAD NO.	COUNTY	FINANCIAL PROJECT ID
AIA	BROWARD	428727-1-52-01

LIGHTING PLAN

SHEET NO.
L-10

emsierra 12/2/2013 7:11:31 PM H:\e\Projects\428727152011\lighting\plan1105.dgn

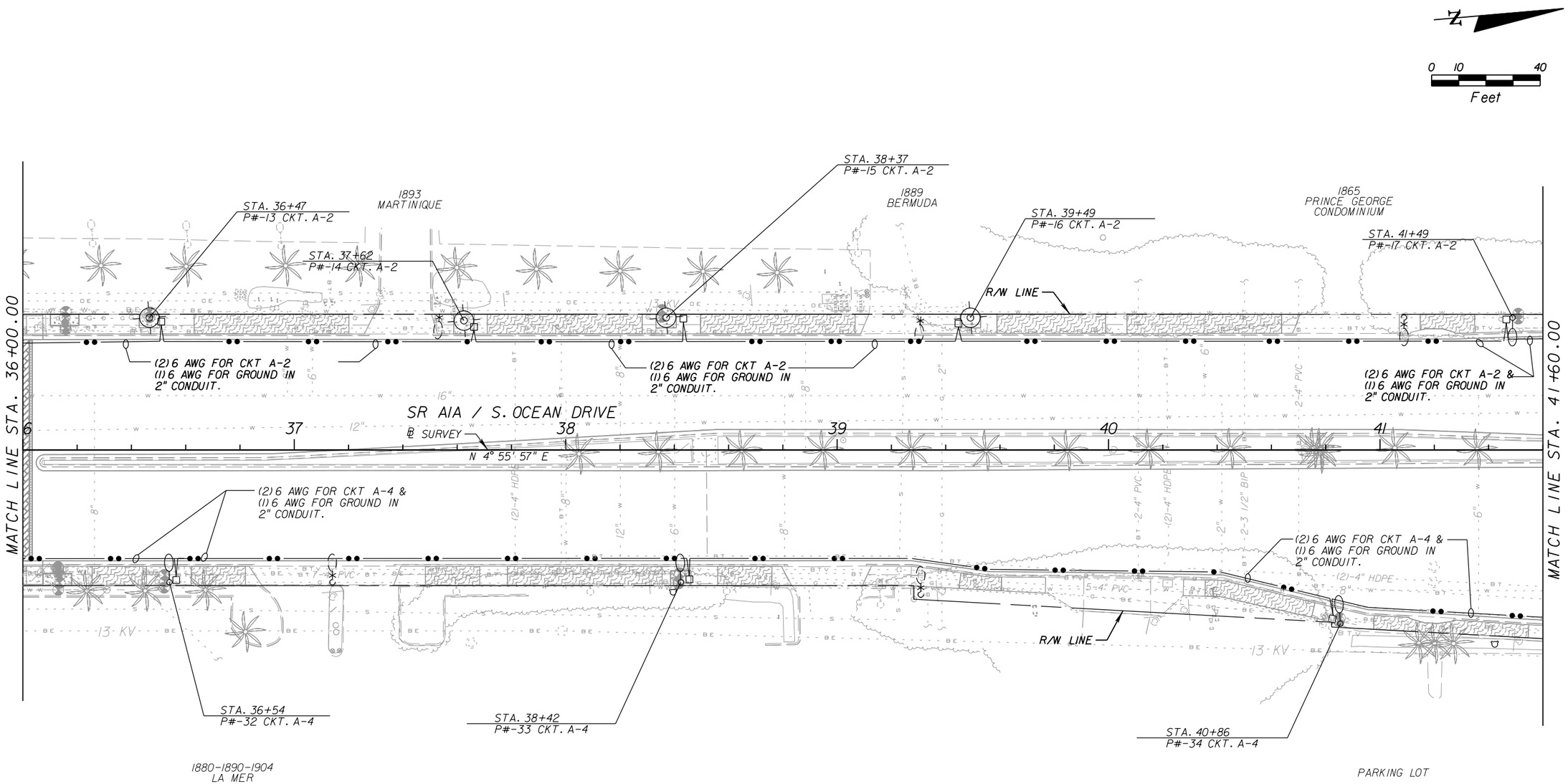

REVISIONS			
DATE	DESCRIPTION	DATE	DESCRIPTION

A&P Consulting Transportation Engineers Corp.
10305 N.W. 41 Street, suite 115
Miami, FL 33178
(305) 592-7283 / fax: (305) 593-1594
CA No. : EB-0007797
Eduardo L. Martinez, P.E. No. 52023

STATE OF FLORIDA
DEPARTMENT OF TRANSPORTATION

ROAD NO.	COUNTY	FINANCIAL PROJECT ID
AIA	BROWARD	428727-1-52-01

LIGHTING PLAN

SHEET NO.
L-11

NOTICE: THE OFFICIAL RECORD OF THIS SHEET IS THE ELECTRONIC FILE SIGNED AND SEALED UNDER RULE 61G15-23.003, F.A.C.

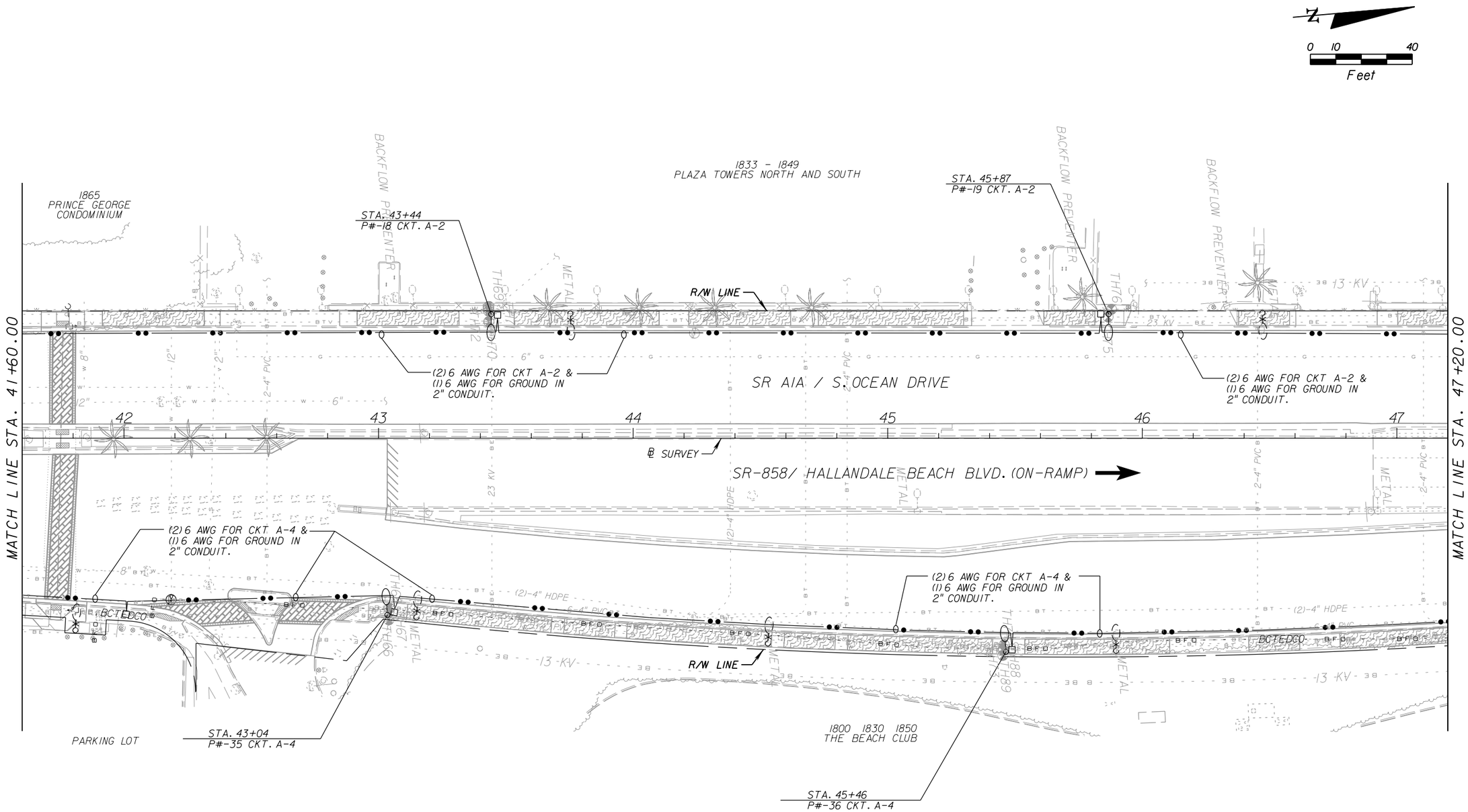

NOTICE: THE OFFICIAL RECORD OF THIS SHEET IS THE ELECTRONIC FILE SIGNED AND SEALED UNDER RULE 61G15-23.003, F.A.C.

REVISIONS			
DATE	DESCRIPTION	DATE	DESCRIPTION

A&P Consulting Transportation Engineers Corp.
10305 N.W. 41 Street, suite 115
Miami, FL 33178
(305) 592-7283 / fax: (305) 593-1594
CA No. : EB-0007797
Eduardo L. Martinez, P.E. No. 52023

STATE OF FLORIDA
DEPARTMENT OF TRANSPORTATION

ROAD NO.	COUNTY	FINANCIAL PROJECT ID
AIA	BROWARD	428727-1-52-01

LIGHTING PLAN

SHEET NO.
L-12

emslerra 12/2/2013 7:11:34 PM H:\e\Projects\428727152011\lighting\planlt07.dgn

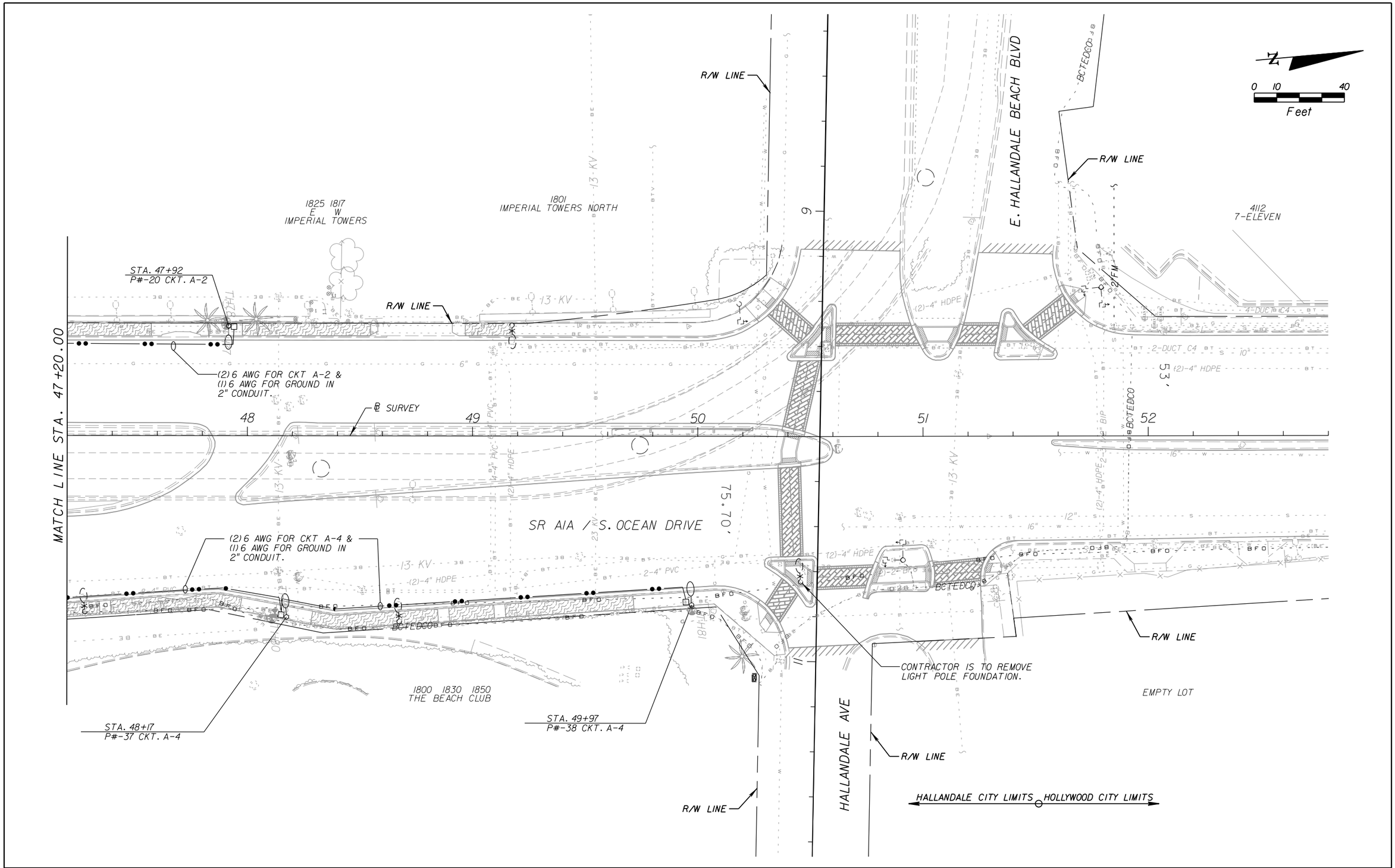

REVISIONS			
DATE	DESCRIPTION	DATE	DESCRIPTION

A&P Consulting Transportation Engineers Corp.
10305 N.W. 41 Street, suite 115
Miami, FL 33178
(305) 592-7283 / fax: (305) 593-1594
CA No. : EB-0007797
Eduardo L. Martinez, P.E. No. 52023

STATE OF FLORIDA
DEPARTMENT OF TRANSPORTATION

ROAD NO.	COUNTY	FINANCIAL PROJECT ID
AIA	BROWARD	428727-1-52-01

LIGHTING PLAN

SHEET NO.
L-13

emsterra 12/2/2013 7:11:36 PM H:\e\Projects\4287271520\Lighting\plan108.dgn

NOTICE: THE OFFICIAL RECORD OF THIS SHEET IS THE ELECTRONIC FILE SIGNED AND SEALED UNDER RULE 61G15-23.003, F.A.C.

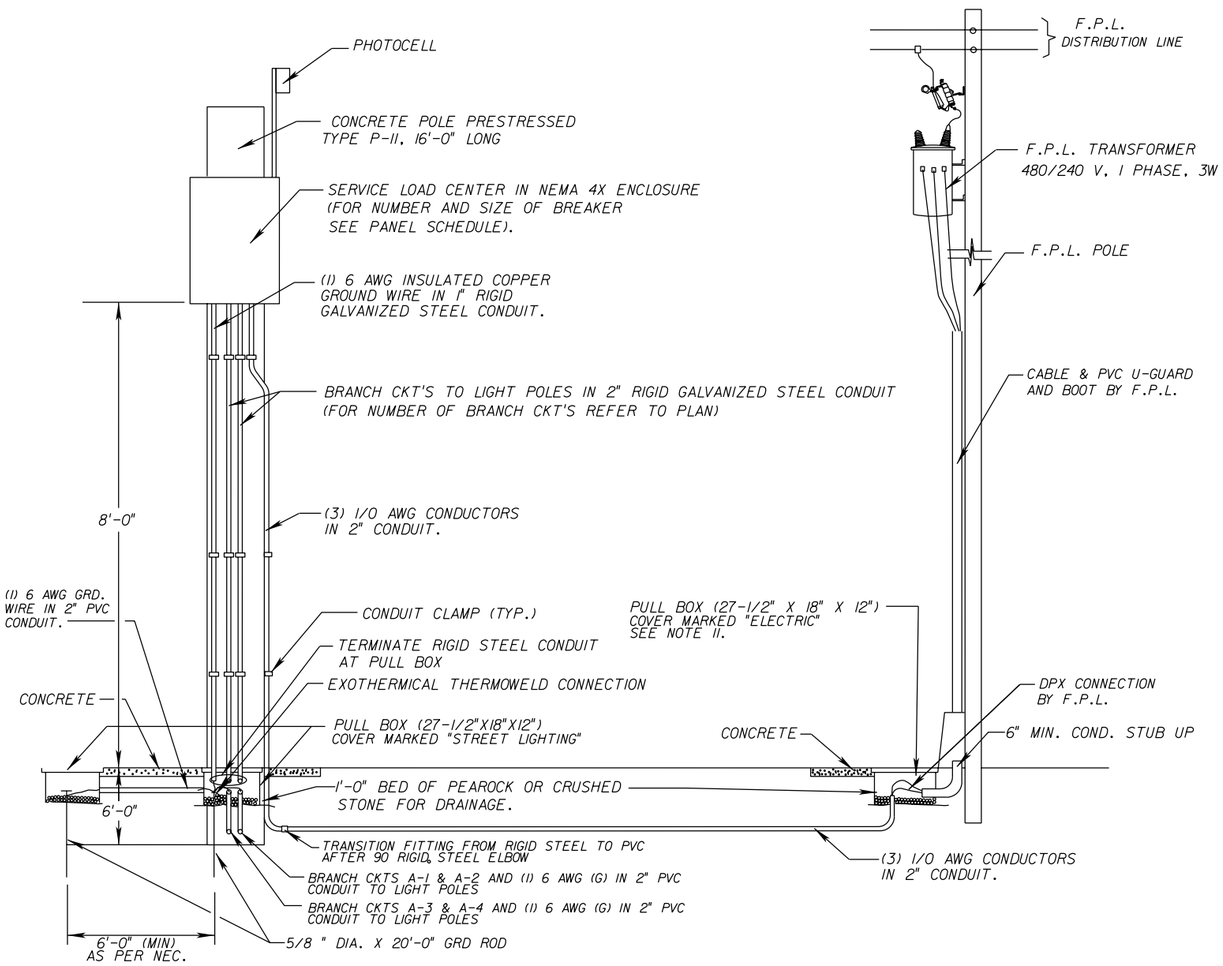

SERVICE POINT DETAIL

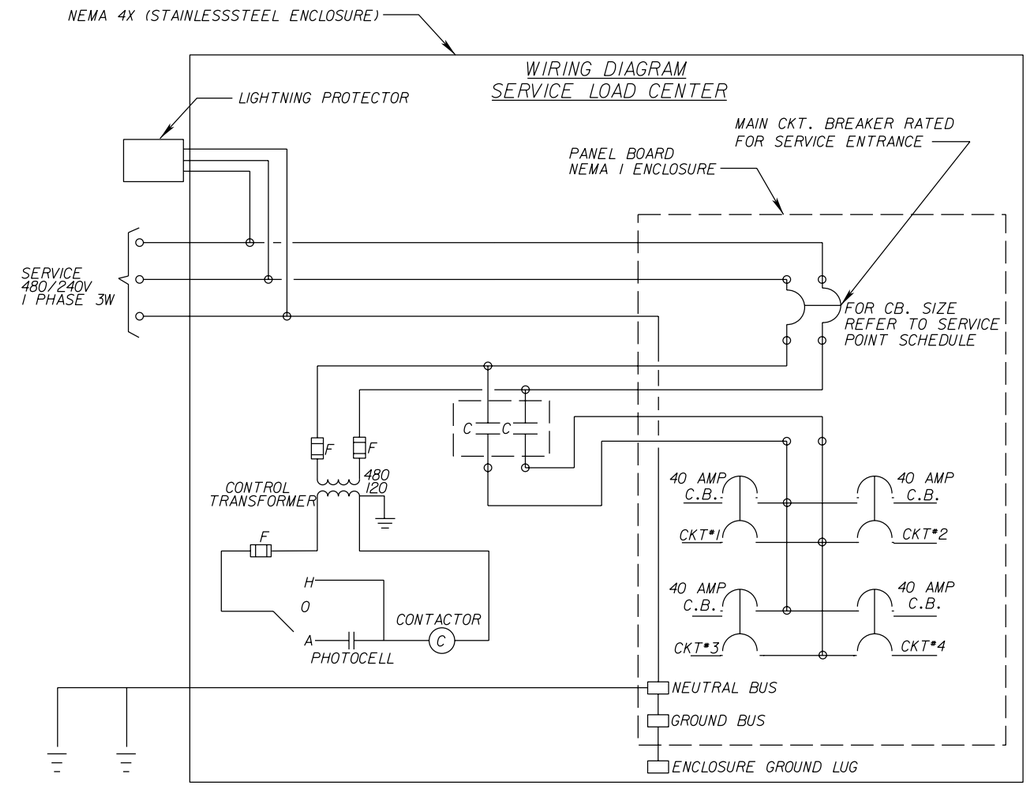

NOTES

8. CONTRACTOR SHALL COORDINATE WITH F.P.L. ENGINEERS FOR THE INSTALLATION OF THE F.P.L. RISER WHICH INCLUDES A FEE OF 148.00 DOLLARS.

9. ALL CONDUCTORS SHALL BE TYPE USE/RHW-XLP. (OTHER TYPE OF CONDUCTOR IS NOT ALLOWED, EXCEPT GROUND WIRE WHICH SHALL BE TYPE THW OR THWN).

10. AFTER OPENING THE PANEL, THE PANELBOARD SHALL HAVE A DEAD FRONT COVER FOR THE PURPOSE OF COVERING ALL THE WIRING AND EXPOSING ONLY THE BUTTONS OF THE BREAKERS IN COMPLIANCE WITH NEC.

11. CONTRACTOR SHALL COORDINATE WITH FPL THE PURCHASE OF THE PULL BOX.

NOTES:

1. THE ENCLOSURE SHALL BE POLE MOUNTED AND RIGIDLY ATTACHED TO THE POLE FACE.
2. 480V MINIMUM RATING BOLT IN TYPE BREAKERS SHALL BE USED.
3. A 600V LIGHTNING PROTECTOR SHALL BE WIRED INSIDE THE ENCLOSURE.
4. A MAIN BREAKER IS REQUIRED IN ALL SERVICE PANELS WITH 2 OR MORE FEEDER BREAKERS.
5. ALL SERVICE EQUIPMENT SHALL BE U.L. APPROVED.
6. BUS BAR TO BE COPPER COATED AND HAVE A MINIMUM RATING OF 100 AMPS WHEN MAIN BREAKER EXCEEDS 100 AMPS.
7. LOCATE CONTACTOR, TRANSFORMER, AND H.O.A. SWITCH INSIDE ENCLOSURE. THE ENCLOSURE TO BE SIZED TO ACCOMODATE AS MANY BREAKERS AS CALLED FOR AND ALL OTHER SERVICE EQUIPMENT.

VOLTAGE 480/240, 1Ø, 3W — MAIN BREAKER 100 AMPS, 2P

BUS 100 A. "A"

SHORT CIRCUIT RATING: 22 KAIC MIN.

CKT. NO.	BKR. TRIP	POLES	VA	EQUIPMENT SERVED
1	40	2	4440	SR AIA SOUTHBOUND
2	40	2	3552	SR AIA SOUTHBOUND
3	40	2	6600	SR AIA NORTHBOUND
4	40	2	5280	SR AIA NORTHBOUND
5	40	2	5000	SPARE
6	--	--	--	SPACE
7	--	--	--	SPACE
8	--	--	--	SPACE
9	--	--	--	SPACE
10	--	--	--	SPACE
11	--	--	--	SPARE
12	--	--	--	SPACE

CONNECTED VA: 24,872 AMPS: 64

DEMAND VA: 24,872 x 1.25 = 31,090 VA

REVISIONS			
DATE	DESCRIPTION	DATE	DESCRIPTION

A&P Consulting Transportation Engineers Corp.
10305 N.W. 41 Street, suite 115
Miami, FL 33178
(305) 592-7283 / fax: (305) 593-1594
CA No. : EB-0007797
Eduardo L. Martinez, P.E. No. 52023

STATE OF FLORIDA
DEPARTMENT OF TRANSPORTATION

ROAD NO.	COUNTY	FINANCIAL PROJECT ID
AIA	BROWARD	428727-1-52-01

SERVICE POINT DETAIL

SHEET NO. L-14

NOTICE: THE OFFICIAL RECORD OF THIS SHEET IS THE ELECTRONIC FILE SIGNED AND SEALED UNDER RULE 61G15-23.003, F.A.C.

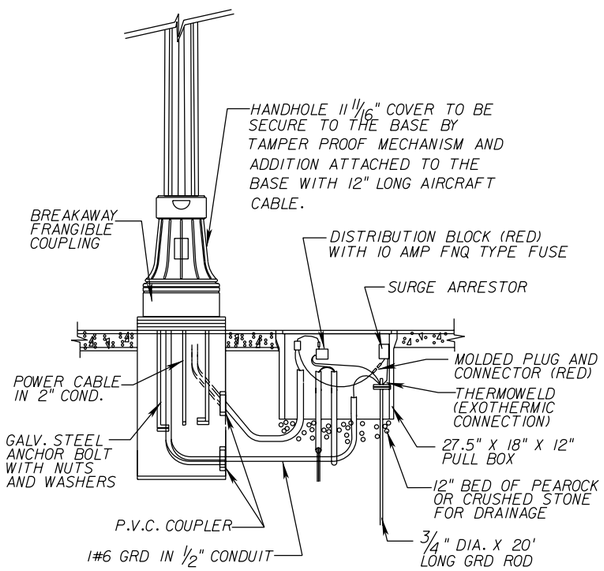

LUMINAIRE CONNECTION DETAIL TYPICAL

NOTES:

1. LUMINAIRES SHALL BE HOLOPHANE ESPLANADE, CATALOG NO. ESU-400HP-24-B-4 (CURVE NO. 47337) AND ESPLANADE PEDESTRIAN CATALOG NO. ESP-15AHP-24-B-4 (CURVE NO. 48932) OR APPROVED EQUAL. BALLAST SHALL BE WIRED FOR 480 V OPERATION. LUMINIARE SHALL BE UL LISTED FOR WET LOCATIONS.

2. OPTICAL SYSTEM:
OPTICAL SYSTEM SHALL MEET IES TYPE III/SHORT CUTOFF DISTRIBUTION. A THERMAL RESISTANT BOROSILICATE GLASS REFRACTOR AND AN ANODIZED BRIGHTENED REFLECTOR SHALL BE USED WITH A VERTICAL LAMP ORIENTATION TO ACHIEVE THE SPECIFIED LIGHT DISTRIBUTION. THE ELECTRICAL/ REFLECTOR ASSEMBLY SHALL HINGE DOWN TO PROVIDE ACCESS TO THE ELECTRICAL MODULE. THIS ASSEMBLY SHALL BE SECURED USING CAPTIVE STAINLESS STEEL HEX HEAD SCREWS. THE REFRACTOR AND REFLECTOR ASSEMBLY SHALL BE SECURED BY A GASKETED HINGED CAST ALUMINUM DOOR. LAMPS SHALL BE 400 & 150 WATT HIGH PRESSURE SODIUM. LAMP SHALL BE HOLOPHANE OR APPROVED EQUAL. LAMP SHALL BE PROVIDED WITH MOGUL BASE SOCKET. MOGUL BASE TO HAVE DATA CODE MARKINGS ON BASE. LAMP SHALL HAVE A NICKEL PLATED BRASS BASE.

NOTICE: THE OFFICIAL RECORD OF THIS SHEET IS THE ELECTRONIC FILE SIGNED AND SEALED UNDER RULE 61G15-23.003, F.A.C.

REVISIONS			
DATE	DESCRIPTION	DATE	DESCRIPTION

A&P Consulting Transportation Engineers Corp.
10305 N.W. 41 Street, suite 115
Miami, FL 33178
(305) 592-7283 / fax: (305) 593-1594
CA No. : EB-0007797
Eduardo L. Martinez, P.E. No. 52023

STATE OF FLORIDA
DEPARTMENT OF TRANSPORTATION

ROAD NO.	COUNTY	FINANCIAL PROJECT ID
A1A	BROWARD	428727-1-52-01

LIGHTING DETAIL

SHEET NO.
L-15

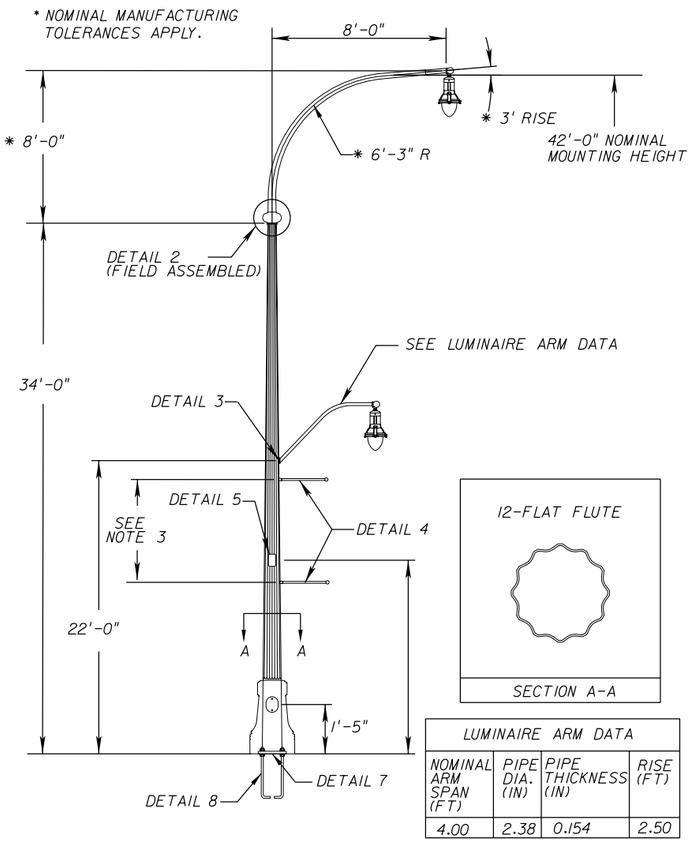

LUMINAIRE ARM DATA			
NOMINAL ARM SPAN (FT)	PIPE DIA. (IN)	PIPE THICKNESS (IN)	RISE (FT)
4.00	2.38	0.154	2.50

NOTE:
THIS DETAIL IS FOR REPRESENTATION PURPOSES ONLY, ITS SOLE PURPOSE IS TO GIVE A GENERAL OVERVIEW OF HOW THE FINAL PRODUCT WILL APPEAR AFTER MANUFACTURING. DETAIL IS NOT TO SCALE.

LIGHT POLE DETAIL
N.T.S.

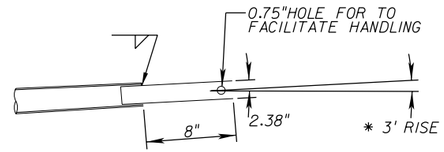

DETAIL 1 - ARM END
N.T.S.

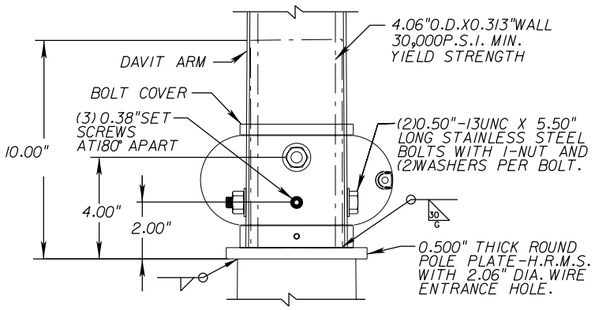

DETAIL 2 - POLE TOP
N.T.S.

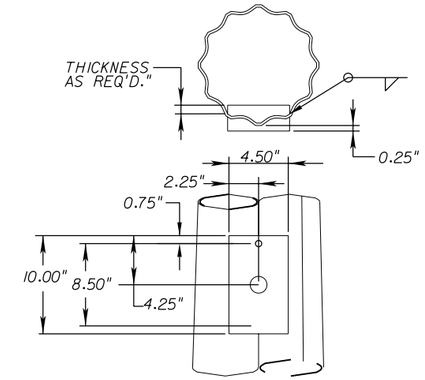

DETAIL 3 - MOUNTED PLATE
N.T.S.

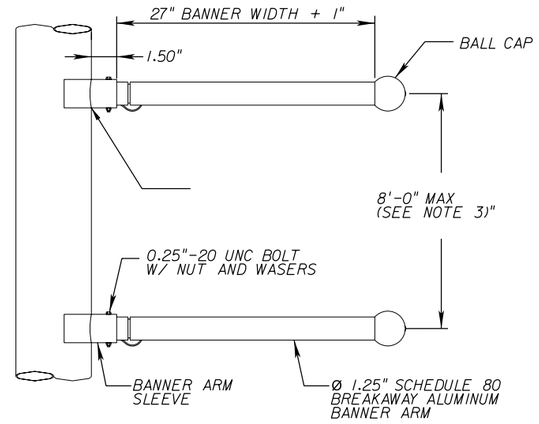

DETAIL 4 - BREAKAWAY BANNER ARM ATTACHMENT
N.T.S.

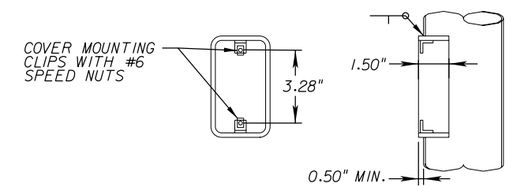

DETAIL 5 - FESTOON BOX
N.T.S.

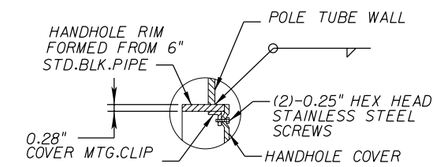

SECTION A-A
N.T.S.

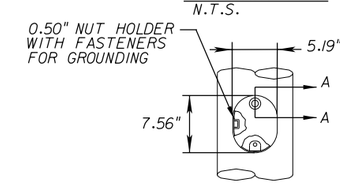

DETAIL 6- POLE BASE
N.T.S.

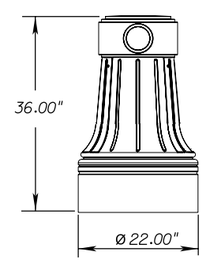

DETAIL 9 - INOIAC DECORATIVE BASE
N.T.S.

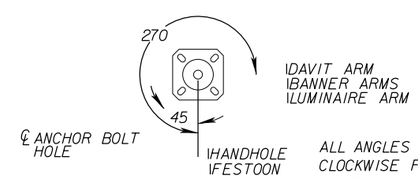

ALL ANGLES MEASURED CLOCKWISE FROM HAND-HOLE AS VIEWED FROM SMALL END OF POLE

RADIAL INDEX
N.T.S.

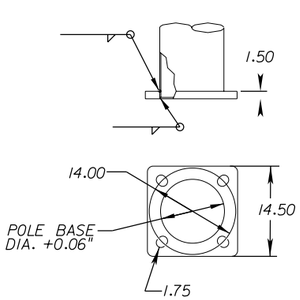

DETAIL 7 - POLE BASE
N.T.S.

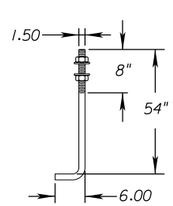

ANCHOR BOLT
(4)-ANCHOR BOLTS WITH (2) HEX NUTS AND (2) WASHERS PER BOLT WITH THREADED END GALVANIZED AT LEAST 12".

DETAIL 8 - ANCHOR BOLT
N.T.S.

MATERIAL DATA

COMPONENT	ASTM DESIGNATION	MIN. YIELD (KSI)
POLE SHAFT	A595 GR. 55	55
POLE BASE	A36	36
ANCHOR BOLTS	F1554 GR.55	55
GALVANIZING-HARDWARE	HOT DIP ZINC	--
LUMINAIRE ARM PIPE & TENONS	A513 OR EQUIV.	36

FINISH COAT: TGIC OR URETHANE POLYESTER POWDER

COLOR: SEE NOTE 2

VALMONT SPEC: F-264__

POLE DATA				
	POLE TUBE			
QTY.	BASE DIA. (IN)	TOP DIA. (IN)	LENGTH (FT)	GAUGE OR THK. (IN)
32	10.00	5.24	34.00	3

VIBRATION DISCLAIMER

ALTHOUGH RARE, VIBRATIONS SEVERE ENOUGH TO CAUSE DAMAGE CAN OCCASIONALLY OCCUR IN STRUCTURES OF ALL TYPES. BECAUSE THEY ARE INFLUENCED BY MANY INTERACTING VARIABLES, VIBRATIONS ARE GENERALLY UNPREDICTABLE. THE USER'S MAINTENANCE PROGRAM SHOULD INCLUDE OBSERVATION FOR EXCESSIVE VIBRATION AND EXAMINATION FOR ANY STRUCTURAL DAMAGE OR BOLT LOOSENING. THE VALMONT WARRANTY SPECIFICALLY EXCLUDES FATIGUE FAILURE OR SIMILAR PHENOMENA RESULTING FROM INDUCED VIBRATION, HARMONIC OSCILLATION OR RESONANCE ASSOCIATED WITH MOVEMENT OF AIR CURRENTS AROUND THE PRODUCT.

NOTES:

1. WRITTEN CONFIRMATION MUST BE PROVIDED CONFIRMING ALL MOUNTING HEIGHTS & ORIENTATIONS.
2. PROVIDE FINISH IN FORM OF RAL#, FEDERAL#, PAINT CHIP, OR VALMONT F-SPEC PRIOR TO RELEASE FOR PRODUCTION.
3. PROVIDE BANNER ARM SPACING PRIOR TO RELEASE FOR PRODUCTION.

NOTICE: THE OFFICIAL RECORD OF THIS SHEET IS THE ELECTRONIC FILE SIGNED AND SEALED UNDER RULE 61G15-23.003, F.A.C.

REVISIONS			
DATE	DESCRIPTION	DATE	DESCRIPTION

A&P Consulting Transportation Engineers Corp.
10305 N.W. 41 Street, suite 115
Miami, FL 33178
(305) 592-7283 / fax: (305) 593-1594
CA No. : EB-0007797
Eduardo L. Martinez, P.E. No. 52023

STATE OF FLORIDA
DEPARTMENT OF TRANSPORTATION

ROAD NO.	COUNTY	FINANCIAL PROJECT ID
A1A	BROWARD	428727-1-52-01

LIGHTING DETAIL

SHEET NO.
L-16

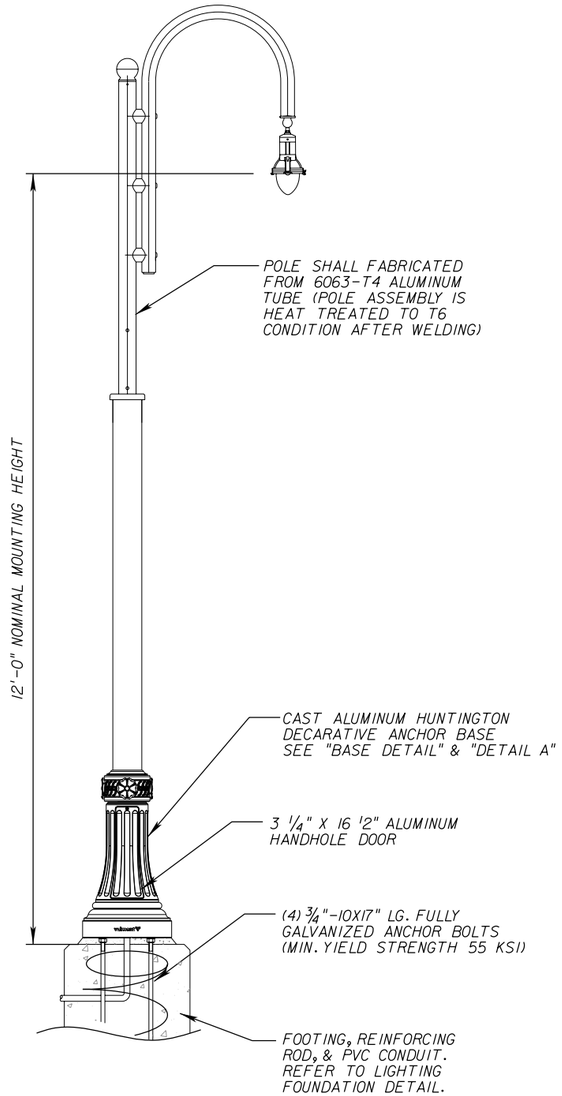

LIGHT POLE DETAIL
N.T.S.

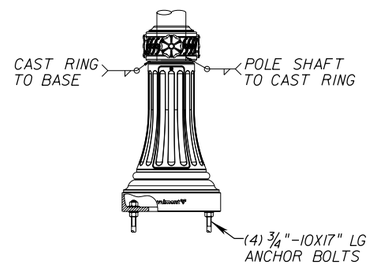

BASE DETAIL

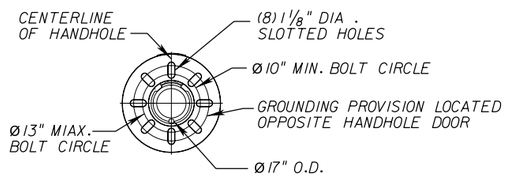

DETAIL A (BOTTOM VIEW)
N.T.S.

NOTICE: THE OFFICIAL RECORD OF THIS SHEET IS THE ELECTRONIC FILE SIGNED AND SEALED UNDER RULE 61G15-23.003, F.A.C.

REVISIONS			
DATE	DESCRIPTION	DATE	DESCRIPTION

A&P Consulting Transportation Engineers Corp.
10305 N.W. 41 Street, suite 115
Miami, FL 33178
(305) 592-7283 / fax: (305) 593-1594
CA No. : EB-0007797
Eduardo L. Martinez, P.E. No. 52023

STATE OF FLORIDA
DEPARTMENT OF TRANSPORTATION

ROAD NO.	COUNTY	FINANCIAL PROJECT ID
A1A	BROWARD	428727-1-52-01

LIGHTING DETAIL

SHEET NO.
L-17

STRUCTURAL GENERAL NOTES

GN.01. DESIGN SPECIFICATIONS:

A. FDOT STRUCTURES MANUAL DATED JANUARY 2013 AND SUBSEQUENT STRUCTURES DESIGN BULLETINS THERETO.
B. AMERICAN ASSOCIATION OF STATE HIGHWAY AND TRANSPORTATION OFFICIALS (AASHTO)LOAD AND RESISTANCE FACTOR (LRFD) BRIDGE DESIGN SPECIFICATIONS, [6TH] EDITION AND ALL SUBSEQUENT INTERIMS.
C. FDOT PLANS PREPARATION MANUAL DATED JULY, 2013.

GN.02. CONSTRUCTION SPECIFICATIONS:

A. FLORIDA DEPARTMENT OF TRANSPORTATION STANDARD SPECIFICATIONS FOR ROAD AND BRIDGE CONSTRUCTION, 2014 EDITION AND SUPPLEMENTS THERETO.

GN.03. DESIGN METHODOLOGY:

A. LOAD AND RESISTANCE FACTOR DESIGN (LRFD) METHOD (FOR STRUCTURAL DESIGN).
B. SERVICE LOADS (FOR GEOTECHNICAL DESIGN).

GN.04. DESIGN LOADING:

A. DEAD LOADS: UNIT WEIGHT OF REINFORCED CONCRETE: 150 PCF
B. WIND LOADS ARE IN ACCORDANCE WITH THE STANDARD SPECIFICATIONS FOR STRUCTURAL SUPPORTS FOR HIGHWAY SIGNS,LUMINAIRES AND TRAFFIC SIGNALS (LTS-6), INCLUDING "FDOT MODIFICATIONS."

GN.05. DIMENSIONS:

A. ALL DIMENSIONS IN THESE PLANS ARE MEASURED EITHER HORIZONTALLY OR VERTICALLY UNLESS OTHERWISE NOTED.

GN.06. ENVIRONMENT:

EXTREMELY AGGRESSIVE LOCATION - COASTAL

GN.07. MATERIALS:

A. CONCRETE:

CONCRETE CLASS	MINIMUM 28-DAY COMPRESSIVE STRENGTH (PSI)	LOCATION OF CONCRETE IN STRUCTURE
V	6500	CAST-IN-PLACE FOUNDATION CAPS
IV (DRILLED SHAFT)	4000	DRILLED SHAFTS
PORTLAND CEMENT GROUT	4500	MICROPILES

CONCRETE SHALL BE IN ACCORDANCE WITH FLORIDA DEPARTMENT OF TRANSPORTATION SPECIFICATION SECTION 346.

B. REINFORCING STEEL:
ALL REINFORCING STEEL SHALL CONFORM TO ASTM A615, GRADE 60. ALL DIMENSIONS PERTAINING TO LOCATION OF REINFORCEMENT ARE TO CENTERLINE OF BARS EXCEPT WHERE THE CLEAR DIMENSION IS SHOWN TO THE FACE OF CONCRETE OR OTHER SURFACES

C. ANCHOR BOLTS:
ANCHOR BOLT DIAMETER: 1.5" Ø.
ANCHOR BOLTS: ASTM F1554 GRADE 55.
NUTS: ASTM A563 GRADE A, HEAVY-HEX.
WASHERS: ASTM F436 TYPE 1.
ALL NUTS, BOLTS AND WASHERS SHALL BE GALVANIZED BY ASTM F2329.
THE CONTRACTOR IS RESPONSIBLE FOR ENSURING THE ANCHOR BOLT CONFIGURATION IS COMPATIBLE WITH THE LIGHT POLE BASE PLATE. SUBMIT MODIFICATIONS OF THE ANCHOR BOLT DESIGN TO THE ENGINEER FOR APPROVAL,

D. STEEL CASING: MICROPILE STEEL CASING SHALL CONFORM TO ASTM A36 AT A MINIMUM.

GN.8. ELEVATIONS:

A. ALL ELEVATIONS REFER TO NORTH AMERICAN VERTICAL DATUM (NAVD) OF 1988.

GN.9. CONCRETE COVER:

UNLESS NOTED OTHERWISE, CONCRETE COVER SHALL CONFORM TO THE FOLLOWING:

CAST-IN-PLACE FOUNDATIONS (CAST AGAINST EARTH)	4½"
CAST-IN-PLACE FOUNDATIONS (FORMED SURFACES)	4"
DRILLED SHAFTS	6"
MICROPILES	6"
INTERNAL SURFACES	3"

CONCRETE COVER DIMENSIONS SHOWN IN THE PLANS DO NOT INCLUDE PLACEMENT AND FABRICATION TOLERANCES UNLESS SHOWN AS "MINIMUM COVER". SEE SPECIFICATIONS FOR ALLOWABLE TOLERANCES.

GN.10. CONSTRUCTION JOINTS IN CONCRETE:

CONSTRUCTION JOINTS WILL BE PERMITTED ONLY AT LOCATIONS INDICATED ON PLANS. ADDITIONAL CONSTRUCTION JOINTS OR ALTERATIONS TO THOSE SHOWN SHALL REQUIRE WRITTEN APPROVAL OF THE ENGINEER.

GN.11. PHASING OF WORK:

WORK PHASING AND PROGRESSION OF WORK SHALL CONFORM TO THE TRAFFIC CONTROL PLANS LOCATED IN THE ROADWAY PLANS.

GN.12. UTILITIES:

A. UNDERGROUND UTILITIES SHOWN IN THE STRUCTURES PLANS ARE AT APPROXIMATE LOCATIONS. FOR ADDITIONAL INFORMATION, REFERENCE ROADWAY AND UTILITY PLANS.

B. SHALL BE IN ACCORDANCE WITH STANDARD SPECIFICATION 7-11.6.

GN. 13 PAY ITEM NOTES

A. PAY ITEM 715-511-115 LIGHT POLE COMPLETE SPECIAL DESIGN, F&I, SINGLE ARM SHOULDER MOUNT, ALUMINUM, 15'. ALL COSTS ASSOCIATED WITH THE SPECIAL FOUNDATIONS FOR THE 15' TALL LIGHT POLES, INCLUDING BUT NOT LIMITED TO MATERIALS, CONCRETE COLORING, LABOR, ETC. SHALL BE INCLUDED IN PAY ITEM NO. 715-511-115.
B. PAY ITEM 715-512-140 LIGHT POLE COMPLETE SPECIAL DESIGN, F&I, DOUBLE ARM SHOULDER MOUNT, ALUMINUM, 40'. ALL COSTS ASSOCIATED WITH THE SPECIAL FOUNDATIONS FOR THE 40' TALL LIGHT POLES, INCLUDING BUT NOT LIMITED TO MATERIALS, CONCRETE COLORING, LABOR, ETC. SHALL BE INCLUDED IN PAY ITEM NO. 715-512-140.

GN. 14 CONCRETE COLOR

TO COMPLY WITH THE CITY OF HALLANDALE BEACH HARDSCAPE REQUIREMENTS, ALL FOUNDATIONS SHALL UTILIZE INTEGRALLY COLORED CONCRETE. THE COLOR SHALL BE SCOFIELD CHROMIX #5130 (SPRING BEIGE). AT A MINIMUM, THE VOLUME OF FOUNDATION ABOVE A POINT 6" BELOW THE FINISHED GROUND LINE OR FINISHED WALKING SURFACE, WHICHEVER APPLIES/GOVERNS, SHALL BE COLORED. HOWEVER, CONSTRUCTABILITY MAY REQUIRE THAT THIS ADMIXTURE BE USED FOR A VOLUME OF THE FOUNDATION THAT IS LARGER THAN THIS MINIMUM VOLUME REQUIRED. THE CONTRACTOR SHALL COMPLY WITH ALL ADMIXTURE MANUFACTURER RECOMMENDATIONS AND SPECIFICATIONS.

LIST OF FREQUENTLY USED ABBREVIATIONS:

EF	EACH FACE
FF	FAR FACE
NF	NEAR FACE
SDG	STRUCTURES DESIGN GUIDELINES
TBR	TO BE REMOVED
UNO	UNLESS NOTED OTHERWISE
PME	PREMOULDED EXPANSION MATERIAL

NOTE: SEE STANDARD INDEX 001 FOR ADDITIONAL ABBREVIATIONS.

Designed By : JCF 09-13
Checked By : REF 09-13
Drawn By : JCF 09-13
Checked By : REF 09-13

NOTICE: THE OFFICIAL RECORD OF THIS SHEET IS THE ELECTRONIC FILE SIGNED AND SEALED UNDER RULE 61G15-23.003, F.A.C.

REVISIONS			
DATE	DESCRIPTION	DATE	DESCRIPTION

BCC Engineering, Inc.
Robert Forand, PE
P.E. License No. 58611
4901 NW 17th Way, Suite 506 Fort Lauderdale, FL 33309
Phone: (954) 928-1828 Fax: (954) 928-1551
Certificate of Authorization No. 7184

STATE OF FLORIDA
DEPARTMENT OF TRANSPORTATION

ROAD NO.	COUNTY	FINANCIAL PROJECT ID
A1A	BROWARD	428727-1-52-01

STRUCTURAL GENERAL NOTES

SHEET NO. L-18

FOUNDATION NOTES

FN.01. CONSTRUCTION SPECIFICATIONS:

A. FURNISH AND INSTALL ALL FOUNDATIONS IN ACCORDANCE WITH STANDARD SPECIFICATIONS SECTION 455, STRUCTURES FOUNDATIONS. ALL SUPPLEMENTS THERETO, THE TECHNICAL SPECIAL PROVISIONS, AND THE PROVISIONS CONTAINED HEREIN.

FN.02. REFERENCES:

A. FOR STRUCTURAL GENERAL NOTES, REFERENCE SHEET NO. L-18.

FN.03. UTILITIES:

SHALL BE IN ACCORDANCE WITH SPECIFICATION 7-11.6.

FN.04. PROTECTION OF EXISTING STRUCTURES:

A. THE PLANS REQUIRE FOUNDATION CONSTRUCTION TO OCCUR IN CLOSE PROXIMITY TO EXISTING STRUCTURES AND THE CONTRACTOR IS TO TAKE ALL REASONABLE PRECAUTIONS TO PREVENT DAMAGE TO SUCH STRUCTURES IN ACCORDANCE WITH THE PROVISIONS OF SECTION 455 OF THE STANDARD SPECIFICATIONS.

B. THE CONTRACTOR IS REQUIRED TO MONITOR EXISTING STRUCTURES FOR SETTLEMENT IN ACCORDANCE WITH THE PROVISIONS OF SECTION 455 OF THE STANDARD SPECIFICATIONS.

FN.05. FOUNDATION INSTALLATION:

A. MINIMUM TIP ELEVATION:

1. THE MINIMUM TIP ELEVATION SHOWN IN THE PLANS IS REQUIRED TO ACHIEVE LATERAL AND AXIAL STABILITY AS REQUIRED BY THE DESIGN.

FN.06. PHASING OF WORK:

A. FOR WORK PHASING AND PROGRESSION OF THE WORK, CONFORM WITH THE TRAFFIC CONTROL PLANS LOCATED IN THE ROADWAY PLANS.

MICROPILE NOTES:

MN.01. MICROPILES

ALL MICROPILES ARE 8" O.D. (INCLUDING ½" WALL THICKNESS PERMANENT STEEL CASING). REFER TO TECHNICAL SPECIAL PROVISIONS FOR MICROPILES.

MN.02. GROUT

GROUT SHALL HAVE A MINIMUM 28-DAY COMPRESSIVE STRENGTH OF 4500 PSI.

MN. 03. REINFORCING STEEL

REINFORCING STEEL SHALL BE ASTM A615 GRADE 60.

MN. 04 INSTALLATION

THE CONTRACTOR SHALL EXERCISE CARE DURING MICROPILE INSTALLATION TO AVOID DAMAGE TO ADJACENT EXISTING STRUCTURES AND UTILITIES IN CLOSE PROXIMITY TO THE MICROPILES.

Designed By : JCF 09-13
Checked By : REF 09-13

Drawn By : JCF 09-13
Checked By : REF 09-13

NOTICE: THE OFFICIAL RECORD OF THIS SHEET IS THE ELECTRONIC FILE SIGNED AND SEALED UNDER RULE 61G15-23.003, F.A.C.

REVISIONS			
DATE	DESCRIPTION	DATE	DESCRIPTION

BCC Engineering, Inc.
Robert Forand, PE
P.E. License No. 58611
4901 NW 17th Way, Suite 506 Fort Lauderdale, FL 33309
Phone: (954) 928-1828 Fax: (954) 928-1551
Certificate of Authorization No. 7184

STATE OF FLORIDA
DEPARTMENT OF TRANSPORTATION

ROAD NO.	COUNTY	FINANCIAL PROJECT ID
A1A	BROWARD	428727-1-52-01

FOUNDATION NOTES

SHEET NO. L-19

LIGHT POLE MICROPILE FOUNDATION DATA TABLE							
INSTALLATION CRITERIA						DESIGN CRITERIA	
LIGHT POLE NO.	MICROPILE O.D. SIZE (IN.)	NOMINAL AXIAL RESISTANCE (TON)	CASING TIP ELEV. (FT.)	MIN. TIP ELEV.	MIN. BONDED LENGTH (FT.)	FACTORED DESIGN LOAD	PILE CUTOFF ELEV.
3	8.0	20	-21	-24.2	3	16	-0.2
5	8.0	20	-21	-24.1	3	16	-0.1
6	8.0	20	-21	-23.9	3	16	0.1
14	8.0	20	-21	-23.7	3	16	0.3
21	8.0	20	-21	-23.8	3	16	0.2
23	8.0	20	-20	-24.4	3	16	-0.4
28	8.0	20	-21	-23.9	3	16	0.1

LIGHT POLE MICROPILE FOUNDATION QUANTITIES TABLE					
LIGHT POLE NO.	CLASS V CONCRETE (CY)	WT. REINF. (LBS.)	8" Ø MICROPILE (LF)	8" Ø PERMANENT STEEL CASING (LF)	PORTLAND CEMENT GROUT* (CY)
3	4.98	914	96	74.7	6.5
5	5.60	967	96	73.7	6.5
6	4.56	890	96	75.7	6.5
14	5.04	916	96	74.7	6.5
21	4.75	903	96	74.7	6.5
23	5.69	979	96	72.7	6.5
28	5.22	950	96	73.7	6.5
TOTAL	35.85	6519	672	519.7	45.3

* SEE NOTES

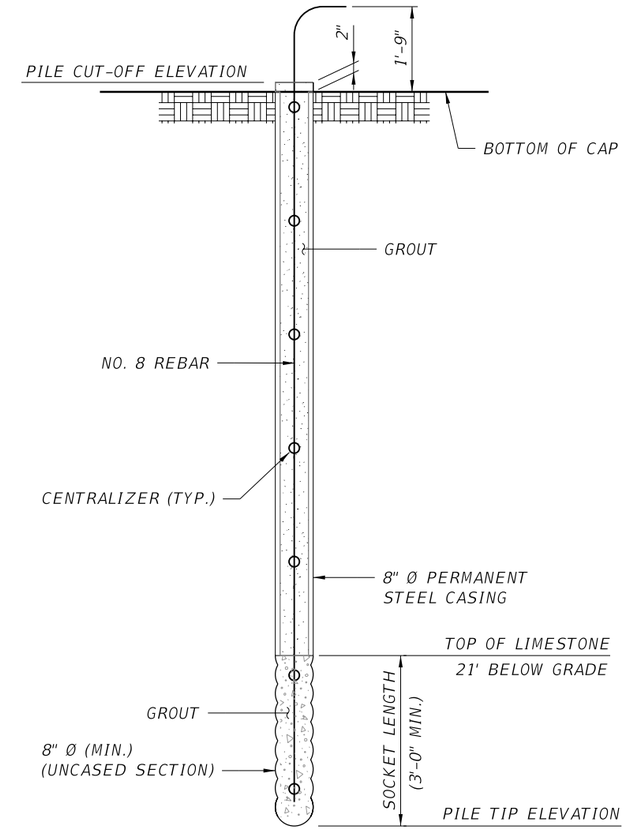

MICROPILE ELEVATION

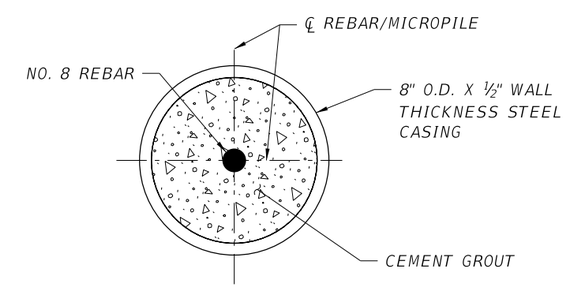

SECTION C-C

(TYPICAL MICROPILE SECTION)

NOTES:

1. FOR LOCATION OF SECTION C-C, SEE SHEET L-22.
2. PORTLAND CEMENT GROUT QUANTITY CALCULATION IS BASED ON THE MICROPILE VOLUME ALONE. A GROUT FACTOR SHOULD BE ANTICIPATED.

Designed By : JCF 09-13
Checked By : REF 09-13

Drawn By : JCF 09-13
Checked By : REF 09-13

NOTICE: THE OFFICIAL RECORD OF THIS SHEET IS THE ELECTRONIC FILE SIGNED AND SEALED UNDER RULE 61G15-23.003, F.A.C.

REVISIONS			
DATE	DESCRIPTION	DATE	DESCRIPTION

BCC Engineering, Inc.
Robert Forand, PE
P.E. License No. 58611
4901 NW 17th Way, Suite 506 Fort Lauderdale, FL 33309
Phone: (954) 928-1828 Fax: (954) 928-1551
Certificate of Authorization No. 7184

STATE OF FLORIDA
DEPARTMENT OF TRANSPORTATION

ROAD NO.	COUNTY	FINANCIAL PROJECT ID
A1A	BROWARD	428727-1-52-01

MICROPILE TABLE, NOTES AND DETAILS

SHEET NO. L-20

LIGHT POLE DRILLED SHAFT FOUNDATION - DRILLED SHAFT DATA TABLE

Table Date 07/01/13

INSTALLATION CRITERIA						DESIGN CRITERIA							TESTING	
LIGHT POLE NO.	SHAFT SIZE (IN.)	(1) TIP ELEV. (FT.)	(2) MIN. TIP ELEV. (FT.)	MIN. ROCK SOCKET DEPTH (FT.)	(3) TOP OF ROCK SOCKET ELEV. (FT.)	FACTORED DESIGN LOAD (KIP)	SERVICE DESIGN UPLIFT LOAD (KIP)	DOWN DRAG (TONS)	LONG TERM SCOUR ELEV. (FT.)	100-YEAR SCOUR ELEV. (FT.)	Ø COMPRESSION	Ø UPLIFT	(4) CONSIDER NONREDUNDANT	TOP OF DRILLED SHAFT ELEVATION (FT.)
1	30	-24	-24.4	3	-21	9	0	N/A	N/A	N/A	N/A	N/A	YES	-0.4
2	30	-24	-24.2	3	-21	9	0	N/A	N/A	N/A	N/A	N/A	YES	-0.2
4	30	-24	-24.4	3	-21	9	0	N/A	N/A	N/A	N/A	N/A	YES	-0.4
7	30	-23	-23.5	3	-21	9	0	N/A	N/A	N/A	N/A	N/A	YES	0.5
12	30	-24	-24.0	3	-21	9	0	N/A	N/A	N/A	N/A	N/A	YES	0.0
13	30	-24	-23.8	3	-21	9	0	N/A	N/A	N/A	N/A	N/A	YES	0.2
15	30	-25	-23.7	3	-21	9	0	N/A	N/A	N/A	N/A	N/A	YES	0.3
16	30	-24	-23.6	3	-21	9	0	N/A	N/A	N/A	N/A	N/A	YES	0.4
22	30	-24	-24.1	3	-21	9	0	N/A	N/A	N/A	N/A	N/A	YES	-0.1
26	30	-24	-23.7	3	-21	9	0	N/A	N/A	N/A	N/A	N/A	YES	0.3
27	30	-24	-24.5	3	-21	9	0	N/A	N/A	N/A	N/A	N/A	YES	-0.5
29	30	-24	-23.9	3	-21	9	0	N/A	N/A	N/A	N/A	N/A	YES	0.1
31	30	-24	-24.5	3	-21	9	0	N/A	N/A	N/A	N/A	N/A	YES	-0.5
33	30	-24	-24.2	3	-21	9	0	N/A	N/A	N/A	N/A	N/A	YES	-0.2
*	30	-24	-25.0	3	-21	9	0	N/A	N/A	N/A	N/A	N/A	YES	**

(1) THE TIP ELEVATION IS THE HIGHEST ELEVATION THE SHAFT TIP SHALL BE CONSTRUCTED

(2) THE MIN. TIP ELEVATION IS THE TIP ELEVATION REQUIRED FOR LATERAL AND AXIAL STABILITY.

(*) LIGHT POLE NUMBERS: 8-11, 17-20, 24, 25, 30, 32, 34-38.

(**) MATCH TOP OF SIDEWALK ELEVATION, SEE ROADWAY PLANS.

LIGHT POLE DRILLED SHAFT FOUNDATION QUANTITES TABLE

	LIGHT POLE NO.	CLASS V CONCRETE (CY)	WT. REINF. (LBS.)	LENGTH OF DRILLED SHAFTS (LF)	CLASS IV CONCRETE (DRILLED SHAFT) (CY)
	1	3.33	1480	24	4.36
	2	5.48	1705	24	4.36
	4	4.33	1571	24	4.36
	7	3.70	1496	24	4.36
	12	3.47	1450	24	4.36
	13	3.47	1450	24	4.36
	15	3.47	1450	24	4.36
	16	3.47	1450	24	4.36
	22	5.83	1718	24	4.36
	26	3.57	1486	24	4.36
	27	5.83	1718	24	4.36
	29	4.05	1548	24	4.36
	31	3.54	1493	24	4.36
	33	4.58	1592	24	4.36
*	EACH	0	864	26	4.73
	SUBTOTAL	0	14681	408	80.41
	TOTAL	58.14	36286	744	141.45

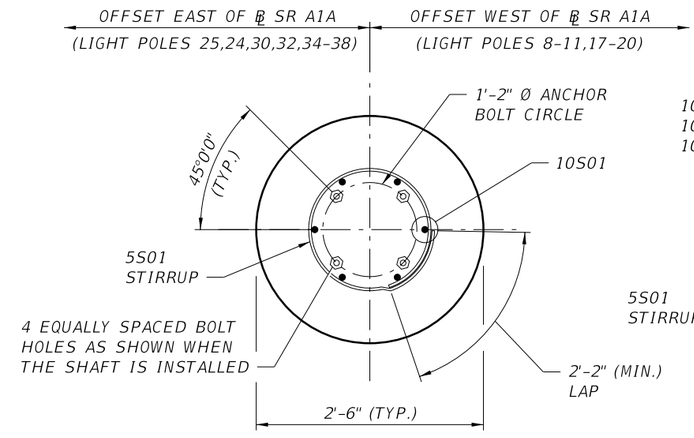

DRILLED SHAFT SECTION G-G

(LIGHT POLES 8-11, 17-20, 24, 25, 30, 32, 34-38)

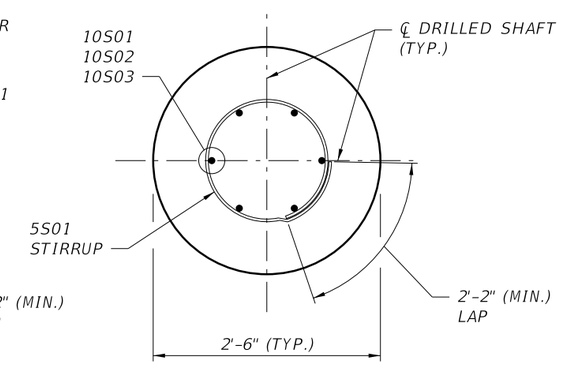

DRILLED SHAFT SECTION F-F

(LIGHT POLES 1,2,4,7,12,13,15,16,22,26,27,29,31,33)

NOTE:

FOR LOCATION OF SECTION F-F AND SECTION G-G, AND DRILLED SHAFT REINFORCING CONFIGURATION, SEE SHEET L-24.

REVISIONS			
DATE	DESCRIPTION	DATE	DESCRIPTION

BCC Engineering, Inc.
Robert Forand, PE
P.E. License No. 58611
4901 NW 17th Way, Suite 506 Fort Lauderdale, FL 33309
Phone: (954) 928-1828 Fax: (954) 928-1551
Certificate of Authorization No. 7184

STATE OF FLORIDA
DEPARTMENT OF TRANSPORTATION

ROAD NO.	COUNTY	FINANCIAL PROJECT ID
A1A	BROWARD	428727-1-52-01

DRILLED SHAFT TABLE, NOTES AND DETAILS

SHEET NO. L-21

Designed By : JCF 09-13
Checked By : REF 09-13
Drawn By : JCF 09-13
Checked By : REF 09-13

NOTICE: THE OFFICIAL RECORD OF THIS SHEET IS THE ELECTRONIC FILE SIGNED AND SEALED UNDER RULE 61G15-23.003, F.A.C.

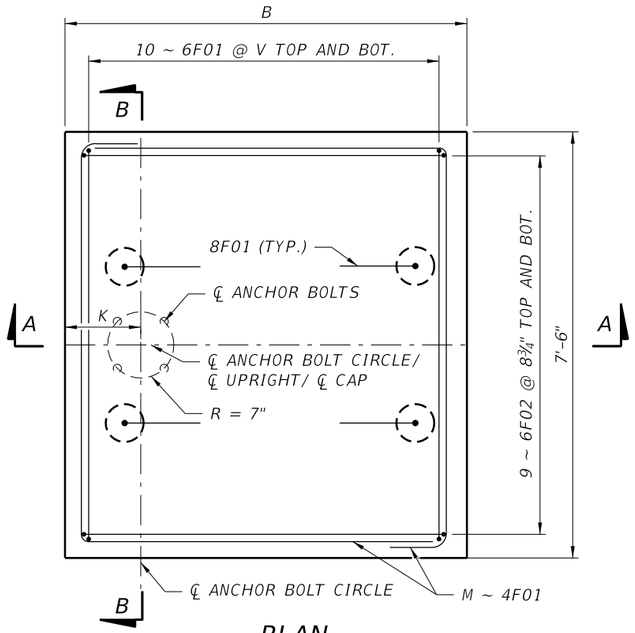

PLAN

LIGHT POLE MICROPILE FOUNDATION TABLE OF VARIABLES												
LIGHT POLE NO.	EL. X	EL. Z	B	T	C	D	E	J	K	M	N	V
3	2.32	2.18	7'-2"	2'-6"	3'-2"	3'-3"	9"	1'-10 1/2"	1'-2"	3	10 3/4"	8 3/8"
5	2.62	2.48	7'-4"	2'-9"	10"	3'-6"	3'-0"	2'-1 1/2"	1'-2"	4	8 1/8"	8 5/8"
6	2.29	2.14	7'-4"	2'-3"	1'-3"	2'-3"	3'-10"	1'-7 1/2"	1'-6"	3	9 1/4"	8 5/8"
14	2.80	2.65	7'-3"	2'-6"	10"	4'-6"	1'-11"	1'-10 1/2"	2'-4"	3	10 3/4"	8 1/2"
21	2.63	2.49	6'-10"	2'-6"	10"	5'-2"	10"	1'-10 1/2"	1'-3"	3	10 3/4"	8"
23	2.60	2.46	6'-10"	3'-0"	10"	5'-2"	10"	2'-4 1/2"	1'-3"	4	9 1/8"	8"
28	2.81	2.67	6'-10"	2'-9"	10"	4'-7"	1'-5"	2'-1 1/2"	1'-4"	4	8 1/8"	8"

NOTES:

1. FOR MICROPILE INFORMATION AND SECTION C-C, SEE SHEET L-20.
2. ANCHOR BOLTS SHALL BE INSTALLED TO THE DEPTH AND IN THE CONFIGURATION SHOWN.
3. FOR REINFORCING BAR LIST, SEE SHEET L-23.
4. FOR CONDUIT DETAILS, SEE LIGHTING SHEETS.

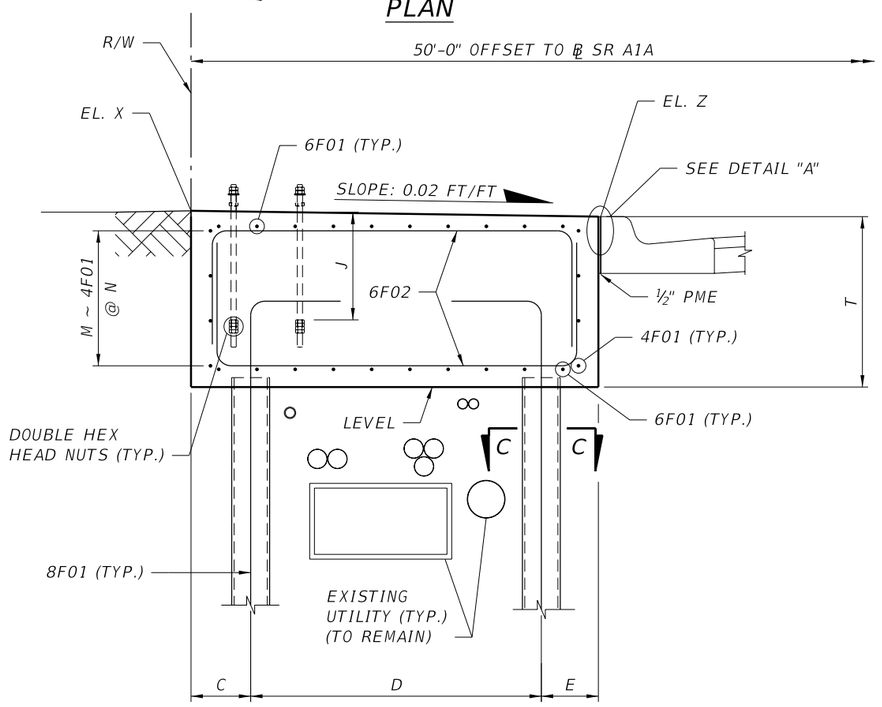

SECTION A-A

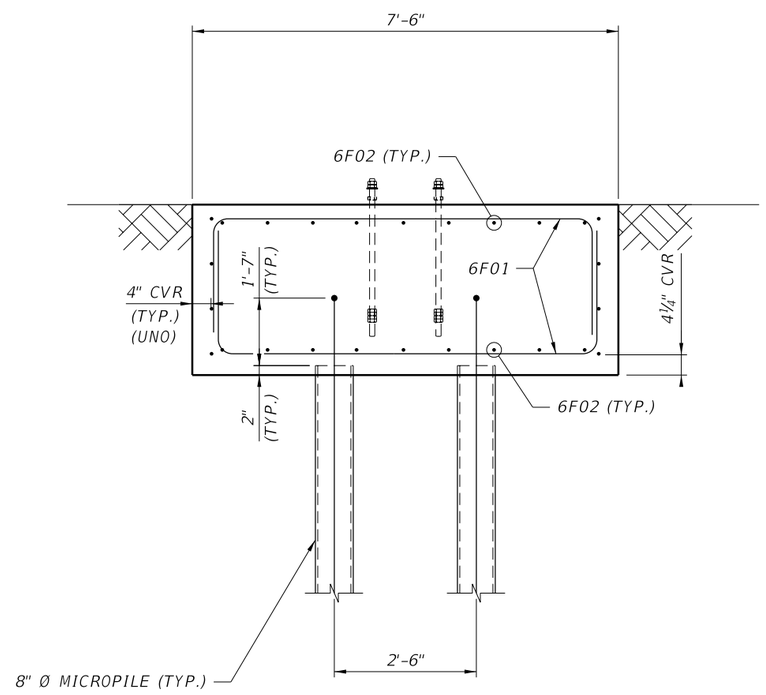

SECTION B-B

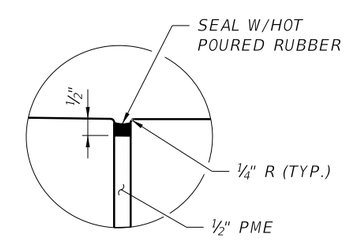

DETAIL "A"

REVISIONS			
DATE	DESCRIPTION	DATE	DESCRIPTION

BCC Engineering, Inc.
Robert Forand, PE
P.E. License No. 58611
4901 NW 17th Way, Suite 506 Fort Lauderdale, FL 33309
Phone: (954) 928-1828 Fax: (954) 928-1551
Certificate of Authorization No. 7184

STATE OF FLORIDA
DEPARTMENT OF TRANSPORTATION

ROAD NO.	COUNTY	FINANCIAL PROJECT ID
A1A	BROWARD	428727-1-52-01

MICROPILE FOUNDATION

SHEET NO. L-22

Designed By : JCF 09-13
Checked By : REF 09-13
Drawn By : JCF 09-13
Checked By : REF 09-13

NOTICE: THE OFFICIAL RECORD OF THIS SHEET IS THE ELECTRONIC FILE SIGNED AND SEALED UNDER RULE 61G15-23.003, F.A.C.

emsierra 12/2/2013 7:37:10 PM H:\e\Projects\42872715201\struct\BOMiscStrLightpole01.dgn

LIGHT POLE 3 - MICROPILE FONDATION

MARK		LENGTH		NO	TYP	STY		B		C		D	
SIZE	DES	FT	IN	BARS	BAR	A	G	FT	IN	FT	IN	FT	IN
4	F01	14	4	6	11			6	10	6	6	1	0
6	F01	10	4	20	11			6	9	1	9 1/2	1	9 1/2
6	F02	9	9	18	11			6	5	1	8	1	8
8	F01	26	5	4	10			25	1	1	4		

LIGHT POLE 5 - MICROPILE FOUNDATION

MARK		LENGTH		NO	TYP	STY		B		C		D	
SIZE	DES	FT	IN	BARS	BAR	A	G	FT	IN	FT	IN	FT	IN
4	F01	14	6	8	11			6	10	6	8	1	0
6	F01	10	10	20	11			6	9	2	1/2	1	1/2
6	F02	10	5	18	11			6	7	1	11	1	11
8	F01	26	5	4	10			25	1	1	4		

LIGHT POLE 6 - MICROPILE FOUNDATION

MARK		LENGTH		NO	TYP	STY		B		C		D	
SIZE	DES	FT	IN	BARS	BAR	A	G	FT	IN	FT	IN	FT	IN
4	F01	14	6	6	11			6	10	6	8	1	0
6	F01	9	10	20	11			6	9	1	6 1/2	1	6 1/2
6	F02	9	5	18	11			6	7	1	5	1	5
8	F01	26	5	4	10			25	1	1	4		

LIGHT POLE 14 - MICROPILE FOUNDATION

MARK		LENGTH		NO	TYP	STY		B		C		D	
SIZE	DES	FT	IN	BARS	BAR	A	G	FT	IN	FT	IN	FT	IN
4	F01	14	5	6	11			6	10	6	7	1	0
6	F01	10	4	20	11			6	9	1	9 1/2	1	9 1/2
6	F02	9	10	18	11			6	6	1	8	1	8
8	F01	26	5	4	10			25	1	1	4		

NOTE: FOR BAR BENDING DETAILS, REFER TO FDOT DESIGN STANDARD INDEX NO. 21300.

LIGHT POLE 21 - MICROPILE FOUNDATION

MARK		LENGTH		NO	TYP	STY		B		C		D	
SIZE	DES	FT	IN	BARS	BAR	A	G	FT	IN	FT	IN	FT	IN
4	F01	14	0	6	11			6	10	6	2	1	0
6	F01	10	4	20	11			6	9	1	9 1/2	1	9 1/2
6	F02	9	5	18	11			6	1	1	8	1	8
8	F01	26	5	4	10			25	1	1	4		

LIGHT POLE 23 - MICROPILE FOUNDATION

MARK		LENGTH		NO	TYP	STY		B		C		D	
SIZE	DES	FT	IN	BARS	BAR	A	G	FT	IN	FT	IN	FT	IN
4	F01	14	0	8	11			6	10	5	11	1	0
6	F01	11	4	20	11			6	9	2	3 1/2	2	3 1/2
6	F02	10	5	18	11			6	1	2	2	2	2
8	F01	26	5	4	10			25	1	1	4		

LIGHT POLE 28 - MICROPILE FOUNDATION

MARK		LENGTH		NO	TYP	STY		B		C		D	
SIZE	DES	FT	IN	BARS	BAR	A	G	FT	IN	FT	IN	FT	IN
4	F01	14	0	8	11			6	10	6	2	1	0
6	F01	10	10	20	11			6	9	2	1/2	1	1/2
6	F02	9	11	18	11			6	1	1	11	1	11
8	F01	26	5	4	10			25	1	1	4		

Designed By : JCF 09-13
Checked By : REF 09-13

Drawn By : JCF 09-13
Checked By : REF 09-13

NOTICE: THE OFFICIAL RECORD OF THIS SHEET IS THE ELECTRONIC FILE SIGNED AND SEALED UNDER RULE 61G15-23.003, F.A.C.

REVISIONS

DATE	DESCRIPTION	DATE	DESCRIPTION

BCC Engineering, Inc.
Robert Forand, PE
P.E. License No. 58611
4901 NW 17th Way, Suite 506 Fort Lauderdale, FL 33309
Phone: (954) 928-1828 Fax: (954) 928-1551
Certificate of Authorization No. 7184

STATE OF FLORIDA
DEPARTMENT OF TRANSPORTATION

ROAD NO.	COUNTY	FINANCIAL PROJECT ID
A1A	BROWARD	428727-1-52-01

MICROPILE FOUNDATION REINFORCING BAR LIST

SHEET NO.
L-23

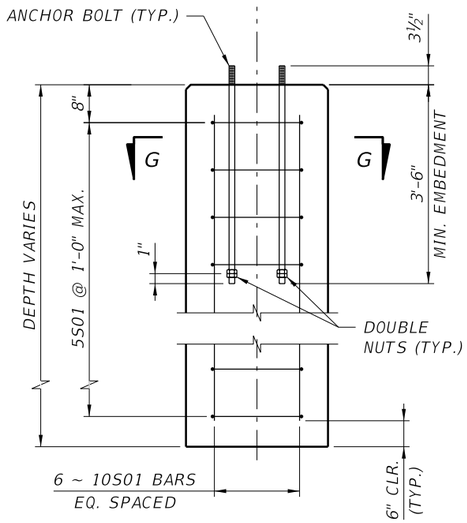

CONCENTRIC FOUNDATION

(LIGHT POLES 8-11, 17-20, 24, 25, 30, 32, AND 34-38)

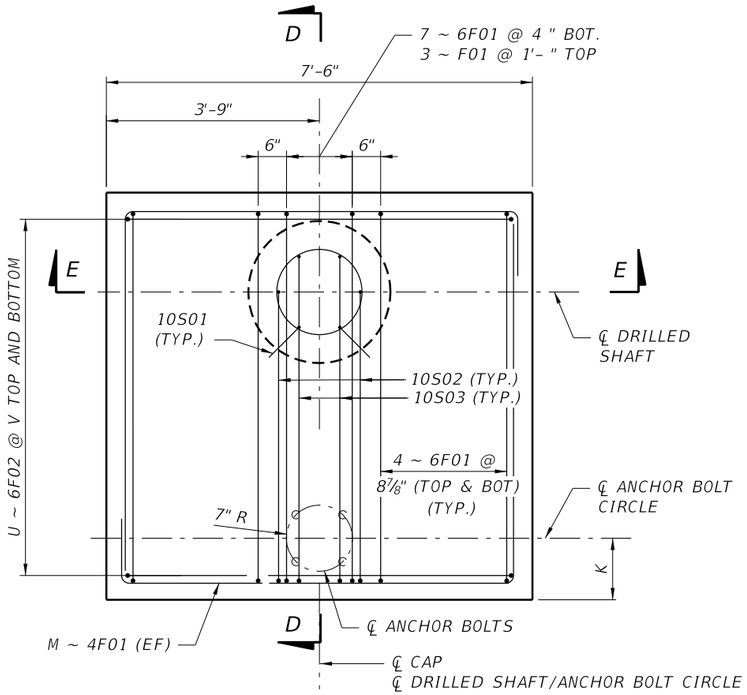

PLAN

LIGHT POLE DRILLED SHAFT FOUNDATION TABLE OF VARIABLES												
LIGHT POLE NO.	EL. X	EL. Z	B	T	C	D	J	K	M	N	U	V
1	2.53	2.39	4'-0"	3'-0"	2'-6"	1'-4"	2'-4 1/2"	1'-3"	4	9 1/8"	6	7 3/4"
2	2.53	2.38	7'-2"	2'-9"	6'-0"	1'-2"	2'-1 1/2"	1'-3"	4	9 1/8"	10	8 1/2"
4	2.33	2.19	5'-8"	2'-9"	4'-4"	1'-4"	2'-1 1/2"	1'-4 3/8"	4	9 1/8"	8	8 3/8"
7	3.02	2.88	5'-4"	2'-6"	3'-6"	1'-10"	1'-10 1/2"	1'-1"	3	10 3/4"	8	7 7/8"
12	2.44	2.30	5'-0"	2'-6"	3'-8"	2'-4"	1'-10 1/2"	1'-3"	3	10 3/4"	7	8 1/2"
13	2.67	2.53	5'-0"	2'-6"	3'-8"	2'-4"	1'-10 1/2"	1'-3"	3	10 3/4"	7	8 1/2"
15	2.78	2.64	5'-0"	2'-6"	3'-8"	2'-4"	1'-10 1/2"	1'-3"	3	10 3/4"	7	8 1/2"
16	2.90	2.76	5'-0"	2'-6"	3'-8"	2'-4"	1'-10 1/2"	1'-3"	3	10 3/4"	7	8 1/2"
22	2.73	2.69	7'-0"	3'-0"	5'-0"	2'-0"	2'-4 1/2"	1'-3"	4	9 1/8"	10	8 3/8"
26	2.63	2.59	4'-8"	2'-6"	3'-6"	2'-2"	1'-10 1/2"	1'-3"	3	10 3/4"	7	7 3/4"
27	2.54	2.30	7'-0"	3'-0"	5'-0"	2'-0"	2'-4 1/2"	1'-4 1/2"	4	9 1/8"	10	8 3/8"
29	2.32	2.18	5'-10"	2'-3"	4'-3"	1'-7"	1'-7 1/2"	1'-3"	3	10 3/4"	9	7 5/8"
31	2.44	2.30	4'-3"	3'-0"	3'-1"	1'-2"	2'-4 1/2"	1'-7 1/2"	4	9 1/8"	6	8 3/8"
33	2.73	2.59	5'-6"	3'-0"	4'-0"	1'-6"	2'-4 1/2"	1'-3"	4	9 1/8"	8	8 1/8"

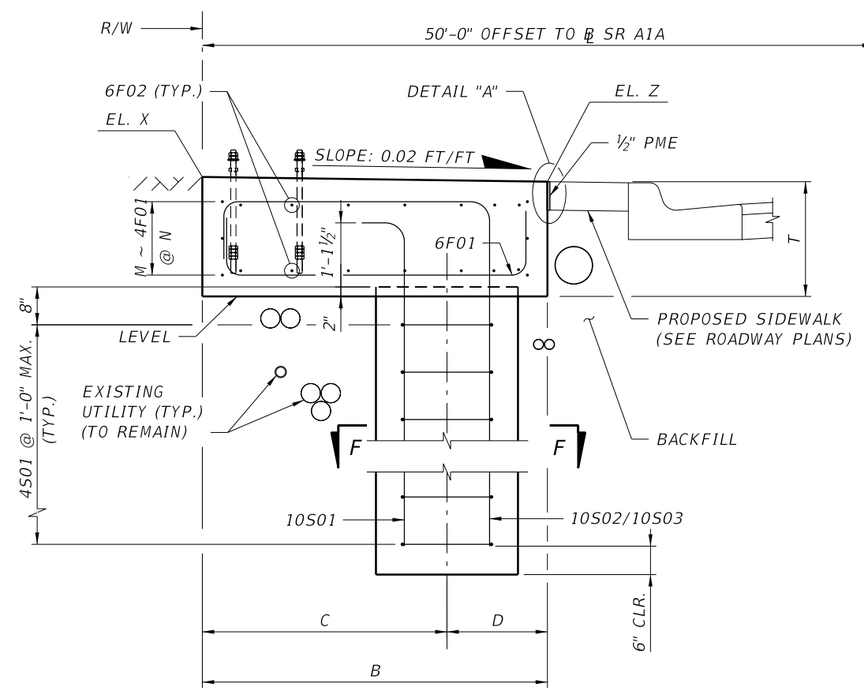

SECTION D-D

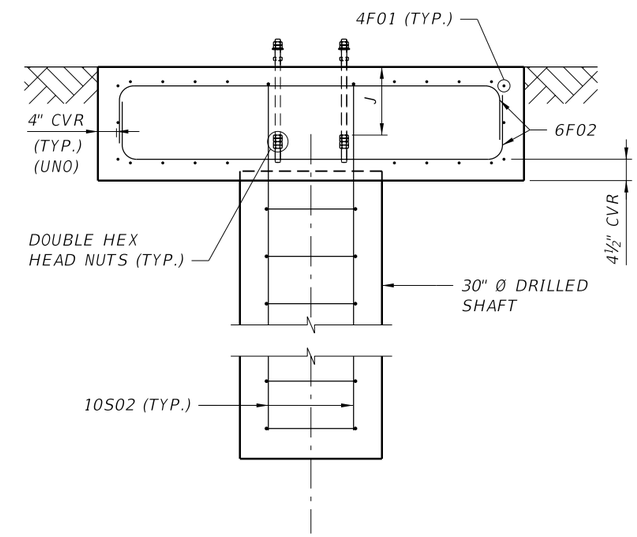

SECTION E-E

NOTES:

1. FOR DRILLED SHAFT INFORMATION AND SECTION F-F, SEE SHEET L-21.
2. ANCHOR BOLTS SHALL BE INSTALLED TO THE DEPTH AND IN THE CONFIGURATION SHOWN.
3. FOR REINFORCING BAR LIST AND QUANTITIES, SEE SHEETS L-25 & L-26.
4. FOR DETAIL 'A' SEE SHEET L-22.
5. FOR CONDUIT DETAILS, SEE LIGHTING SHEETS.

Designed By : JCF 09-13
Checked By : REF 09-13

Drawn By : JCF 09-13
Checked By : REF 09-13

NOTICE: THE OFFICIAL RECORD OF THIS SHEET IS THE ELECTRONIC FILE SIGNED AND SEALED UNDER RULE 61G15-23.003, F.A.C.

REVISIONS			
DATE	DESCRIPTION	DATE	DESCRIPTION

BCC Engineering, Inc.
Robert Forand, PE
P.E. License No. 58611
4901 NW 17th Way, Suite 506 Fort Lauderdale, FL 33309
Phone: (954) 928-1828 Fax: (954) 928-1551
Certificate of Authorization No. 7184

STATE OF FLORIDA
DEPARTMENT OF TRANSPORTATION

ROAD NO.	COUNTY	FINANCIAL PROJECT ID
A1A	BROWARD	428727-1-52-01

DRILLED SHAFT FOUNDATION

SHEET NO.
L-24

LIGHT POLE 1 - DRILLED SHAFT FOUNDATION

MARK		LENGTH	NO	TYP	STY		B	C	D
SIZE	DES	FT IN	BARS	BAR	A	G	FT IN	FT IN	FT IN
4	F01	11 - 11	8	11			6 - 10	3 - 1	1 - 9
5	S01	6 - 11	25	24			2 - 2	0 - 9	
6	F01	11 - 4	22	11			6 - 9	2 - 3 1/2	2 - 3 1/2
6	F02	7 - 7	12	11			3 - 3	2 - 2	2 - 2
10	S01	25 - 9	2	10			25 - 4	5	
10	S02	29 - 0	2	10			26 - 8	2 - 4	
10	S03	29 - 8	2	10			26 - 8	3 - 0	

LIGHT POLE 2 - DRILLED SHAFT FOUNDATION

MARK		LENGTH	NO	TYP	STY		B	C	D
SIZE	DES	FT IN	BARS	BAR	A	G	FT IN	FT IN	FT IN
4	F01	15 - 1	8	11			6 - 10	6 - 6	1 - 9
5	S01	6 - 11	25	24			2 - 2	0 - 9	
6	F01	10 - 10	22	11			6 - 9	2 - 1/2	2 - 1/2
6	F02	10 - 3	20	11			6 - 5	1 - 11	1 - 11
10	S01	25 - 9	2	10			25 - 4	5	
10	S02	32 - 1	2	10			26 - 5	5 - 8	
10	S03	32 - 9	2	10			26 - 5	6 - 4	

LIGHT POLE 4 - DRILLED SHAFT FOUNDATION

MARK		LENGTH	NO	TYP	STY		B	C	D
SIZE	DES	FT IN	BARS	BAR	A	G	FT IN	FT IN	FT IN
4	F01	13 - 7	8	11			6 - 10	5 - 0	1 - 9
5	S01	6 - 11	25	24			2 - 2	0 - 9	
6	F01	10 - 10	22	11			6 - 9	2 - 1/2	2 - 1/2
6	F02	8 - 9	16	11			4 - 11	1 - 11	1 - 11
10	S01	25 - 9	2	10			25 - 4	5	
10	S02	30 - 5	2	10			26 - 5	4 - 0	
10	S03	31 - 1	2	10			26 - 5	4 - 8	

LIGHT POLE 7 - DRILLED SHAFT FOUNDATION

MARK		LENGTH	NO	TYP	STY		B	C	D
SIZE	DES	FT IN	BARS	BAR	A	G	FT IN	FT IN	FT IN
4	F01	13 - 3	6	11			6 - 10	4 - 4	1 - 9
5	S01	6 - 11	25	24			2 - 2	0 - 9	
6	F01	10 - 4	22	11			6 - 9	1 - 9 1/2	1 - 9 1/2
6	F02	7 - 11	16	11			4 - 3	1 - 8	1 - 8
10	S01	25 - 9	2	10			25 - 4	5	
10	S02	29 - 4	2	10			26 - 2	3 - 2	
10	S03	30 - 0	2	10			26 - 2	3 - 10	

NOTE: FOR BAR BENDING DETAILS, REFER TO FDOT DESIGN STANDARD INDEX NO. 21300.

LIGHT POLE 12 - DRILLED SHAFT FOUNDATION

MARK		LENGTH	NO	TYP	STY		B	C	D
SIZE	DES	FT IN	BARS	BAR	A	G	FT IN	FT IN	FT IN
4	F01	12 - 11	6	11			6 - 10	4 - 4	1 - 9
5	S01	6 - 11	25	24			2 - 2	0 - 9	
6	F01	10 - 4	22	11			6 - 9	1 - 9 1/2	1 - 9 1/2
6	F02	7 - 7	14	11			4 - 3	1 - 8	1 - 8
10	S01	25 - 9	2	10			25 - 4	5	
10	S02	28 - 6	2	10			26 - 2	2 - 4	
10	S03	29 - 2	2	10			26 - 2	3 - 0	

LIGHT POLE 13 - DRILLED SHAFT FOUNDATION

MARK		LENGTH	NO	TYP	STY		B	C	D
SIZE	DES	FT IN	BARS	BAR	A	G	FT IN	FT IN	FT IN
4	F01	12 - 11	6	11	·	·	6 - 10	4 - 4	1 - 9
5	S01	6 - 11	25	24			2 - 2	0 - 9	
6	F01	10 - 4	22	11			6 - 9	1 - 9 1/2	1 - 9 1/2
6	F02	7 - 7	14	11			4 - 3	1 - 8	1 - 8
10	S01	25 - 9	2	10			25 - 4	5	
10	S02	28 - 6	2	10			26 - 2	2 - 4	
10	S03	29 - 2	2	10			26 - 2	3 - 0	

LIGHT POLE 15 - DRILLED SHAFT FOUNDATION

MARK		LENGTH	NO	TYP	STY		B	C	D
SIZE	DES	FT IN	BARS	BAR	A	G	FT IN	FT IN	FT IN
4	F01	12 - 11	6	11			6 - 10	4 - 4	1 - 9
5	S01	6 - 11	25	24			2 - 2	0 - 9	
6	F01	10 - 4	22	11			6 - 9	1 - 9 1/2	1 - 9 1/2
6	F02	7 - 7	14	11			4 - 3	1 - 8	1 - 8
10	S01	25 - 9	2	10			25 - 4	5	
10	S02	28 - 6	2	10			26 - 2	2 - 4	
10	S03	29 - 2	2	10			26 - 2	3 - 0	

LIGHT POLE 16 - DRILLED SHAFT FOUNDATION

MARK		LENGTH	NO	TYP	STY		B	C	D
SIZE	DES	FT IN	BARS	BAR	A	G	FT IN	FT IN	FT IN
4	F01	12 - 11	6	11			6 - 10	4 - 4	1 - 9
5	S01	6 - 11	25	24			2 - 2	0 - 9	
6	F01	10 - 4	22	11			6 - 9	1 - 9 1/2	1 - 9 1/2
6	F02	7 - 7	14	11			4 - 3	1 - 8	1 - 8
10	S01	25 - 9	2	10			25 - 4	5	
10	S02	28 - 6	2	10			26 - 2	2 - 4	
10	S03	29 - 2	2	10			26 - 2	3 - 0	

Designed By : JCF 09-13
Checked By : REF 09-13

Drawn By : JCF 09-13
Checked By : REF 09-13

NOTICE: THE OFFICIAL RECORD OF THIS SHEET IS THE ELECTRONIC FILE SIGNED AND SEALED UNDER RULE 61G15-23.003, F.A.C.

REVISIONS

DATE	DESCRIPTION	DATE	DESCRIPTION

BCC Engineering, Inc.
Robert Forand, PE
P.E. License No. 58611
4901 NW 17th Way, Suite 506 Fort Lauderdale, FL 33309
Phone: (954) 928-1828 Fax: (954) 928-1551
Certificate of Authorization No. 7184

STATE OF FLORIDA
DEPARTMENT OF TRANSPORTATION

ROAD NO.	COUNTY	FINANCIAL PROJECT ID
A1A	BROWARD	428727-1-52-01

DRILLED SHAFT FOUNDATION REINF. BAR LIST (1 OF 2)

SHEET NO.
L-25

LIGHT POLE 22 - DRILLED SHAFT FOUNDATION

MARK		LENGTH		NO	TYP	STY		B		C		D	
SIZE	DES	FT	IN	BARS	BAR	A	G	FT	IN	FT	IN	FT	IN
4	F01	14	11	8	11	·	·	6	10	6	4	1	9
5	S01	6	11	25	24			2	2	0	9		
6	F01	11	4	22	11			6	9	2	3 1/2	2	3 1/2
6	F02	10	7	20	11			6	3	2	2	2	2
10	S01	25	9	2	10			25	4	5			
10	S02	31	4	2	10			26	8	4	8		
10	S03	32	0	2	10			26	8	5	4		

LIGHT POLE 26 - DRILLED SHAFT FOUNDATION

MARK		LENGTH		NO	TYP	STY		B		C		D	
SIZE	DES	FT	IN	BARS	BAR	A	G	FT	IN	FT	IN	FT	IN
4	F01	12	7	8	11			6	10	4	0	1	9
5	S01	6	11	25	24			2	2	0	9		
6	F01	10	10	22	11			6	9	2	1/2	2	1/2
6	F02	7	9	14	11			3	11	1	11	1	11
10	S01	25	9	2	10			25	4	5			
10	S02	28	7	2	10			26	5	2	2		
10	S03	29	3	2	10			26	5	2	10		

LIGHT POLE 27 - DRILLED SHAFT FOUNDATION

MARK		LENGTH		NO	TYP	STY		B		C		D	
SIZE	DES	FT	IN	BARS	BAR	A	G	FT	IN	FT	IN	FT	IN
4	F01	14	11	8	11			6	10	6	1	1	9
5	S01	6	11	25	24			2	2	2	3		
6	F01	11	4	22	11			6	9	2	1/2	2	1/2
6	F02	10	7	20	11			6	3	2	1/2	2	1/2
10	S01	25	9	2	10			25	4	5			
10	S02	31	4	2	10			26	8	4	8		
10	S03	32	0	2	10			26	8	5	4		

LIGHT POLE 29 - DRILLED SHAFT FOUNDATION

MARK		LENGTH		NO	TYP	STY		B		C		D	
SIZE	DES	FT	IN	BARS	BAR	A	G	FT	IN	FT	IN	FT	IN
4	F01	13	9	6	11			6	10	5	2	1	9
5	S01	6	11	25	24			2	2	0	9		
6	F01	10	4	18	11			6	9	1	9 1/2	1	9 1/2
6	F02	8	5	18	11			5	1	1	8	1	8
10	S01	25	9	2	10			25	4	5			
10	S02	30	1	2	10			26	2	3	11		
10	S03	30	9	2	10			26	2	4	7		

LIGHT POLE 31 - DRILLED SHAFT FOUNDATION

MARK		LENGTH		NO	TYP	STY		B		C		D	
SIZE	DES	FT	IN	BARS	BAR	A	G	FT	IN	FT	IN	FT	IN
4	F01	12	2	8	11			6	10	3	7	1	9
5	S01	6	11	25	24			2	2	0	9		
6	F01	11	4	22	11			6	9	2	3 1/2	2	3 1/2
6	F02	7	10	12	11			3	6	2	2	2	2
10	S01	25	9	2	10			25	4	5			
10	S02	29	5	2	10			26	8	2	9		
10	S03	30	1	2	10			26	8	3	5		

LIGHT POLE 33 - DRILLED SHAFT FOUNDATION

MARK		LENGTH		NO	TYP	STY		B		C		D	
SIZE	DES	FT	IN	BARS	BAR	A	G	FT	IN	FT	IN	FT	IN
4	F01	13	5	8	11			6	10	4	10	1	9
5	S01	6	11	25	24			2	2	0	9		
6	F01	11	4	22	11			6	9	2	3 1/2	2	3 1/2
6	F02	9	1	16	11			4	9	2	2	2	2
10	S01	25	9	2	10			25	4	5			
10	S02	30	4	2	10			26	8	3	8		
10	S03	31	0	2	10			26	8	4	4		

LIGHT POLES 8-11, 17-20, 24, 25, 30, 32, AND 34-38 DRILLED SHAFT FOUNDATIONS

MARK		LENGTH		NO	TYP	STY		B		C		D	
SIZE	DES	FT	IN	BARS	BAR	A	G	FT	IN	FT	IN	FT	IN
EACH FOUNDATION (17 REQUIRED)													
5	S01	6	11	25	24			2	2	0	9		
10	S01	26	6	15	1			26	6				

NOTE: FOR BAR BENDING DETAILS, REFER TO FDOT DESIGN STANDARD INDEX 21300.

REVISIONS			
DATE	DESCRIPTION	DATE	DESCRIPTION

BCC Engineering, Inc.
Robert Forand, PE
P.E. License No. 58611
4901 NW 17th Way, Suite 506 Fort Lauderdale, FL 33309
Phone: (954) 928-1828 Fax: (954) 928-1551
Certificate of Authorization No. 7184

STATE OF FLORIDA
DEPARTMENT OF TRANSPORTATION

ROAD NO.	COUNTY	FINANCIAL PROJECT ID
A1A	BROWARD	428727-1-52-01

DRILLED SHAFT FOUNDATION REINF. BAR LIST (2 OF 2)

SHEET NO.
L-26

Designed By : JCF 09-13
Checked By : REF 09-13
Drawn By : JCF 09-13
Checked By : REF 09-13

NOTICE: THE OFFICIAL RECORD OF THIS SHEET IS THE ELECTRONIC FILE SIGNED AND SEALED UNDER RULE 61G15-23.003, F.A.C.

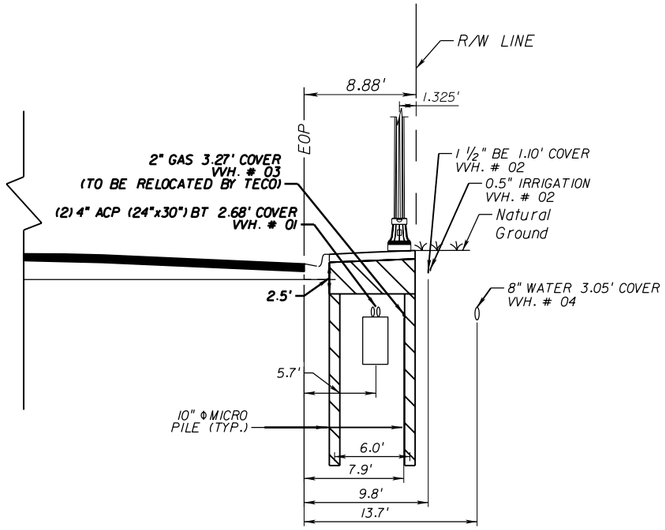

Light Pole # 21
STA. 11+56.20 (48.74' RT)
N.T.S.

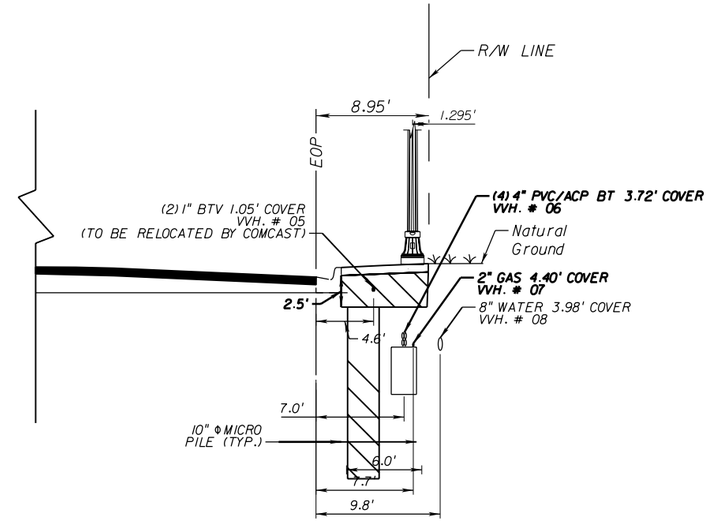

Light Pole # 22
STA. 13+94.53 (48.74' RT)
N.T.S.

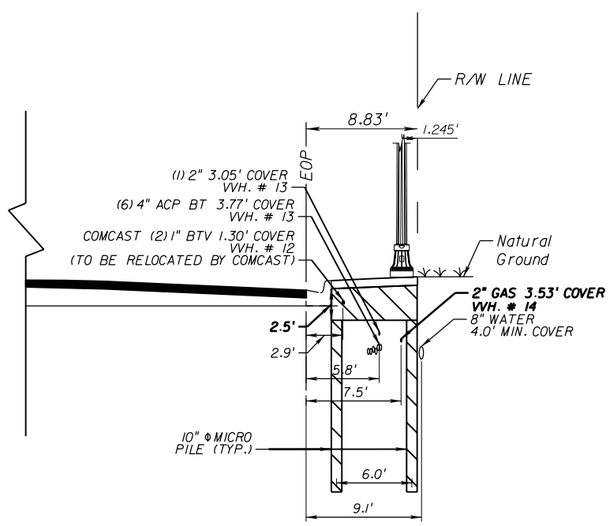

Light Pole # 23
STA. 15+97.47 (48.74' RT)
N.T.S.

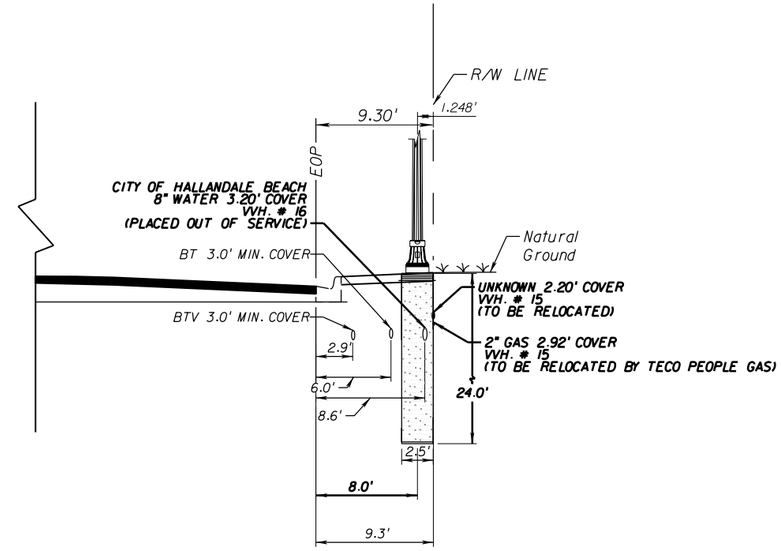

Light Pole # 24
STA. 18+02.73 (48.75' RT)
N.T.S.

REVISIONS			
DATE	DESCRIPTION	DATE	DESCRIPTION

A&P Consulting Transportation Engineers Corp.
10305 N.W. 41 Street, suite 115
Miami, FL 33178
(305) 592-7283 / fax: (305) 593-1594
CA No. : EB-0007797
Eithel M. Sierra, P.E. No. 55401

STATE OF FLORIDA
DEPARTMENT OF TRANSPORTATION

ROAD NO.	COUNTY	FINANCIAL PROJECT ID
A1A	BROWARD	428727-1-52-01

LIGHT POLE LOCATION UTILITY DETAILS

SHEET NO.
L-27

NOTICE: THE OFFICIAL RECORD OF THIS SHEET IS THE ELECTRONIC FILE SIGNED AND SEALED UNDER RULE 61G15-23.003, F.A.C.

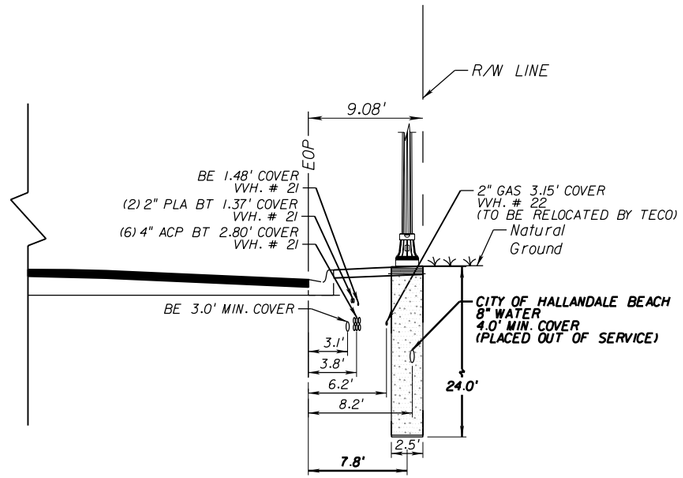

Light Pole # 25
STA. 19+53.74 (48.75' RT)
N.T.S.

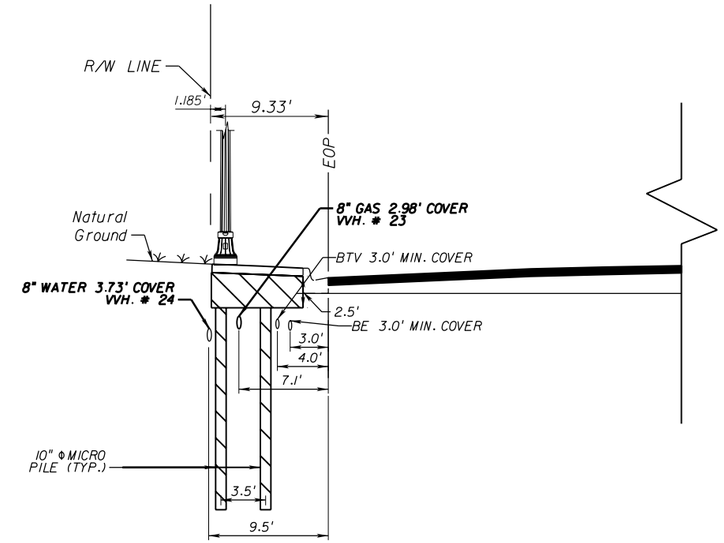

Light Pole # 5
STA. 20+87.95 (48.83' LT)
N.T.S.

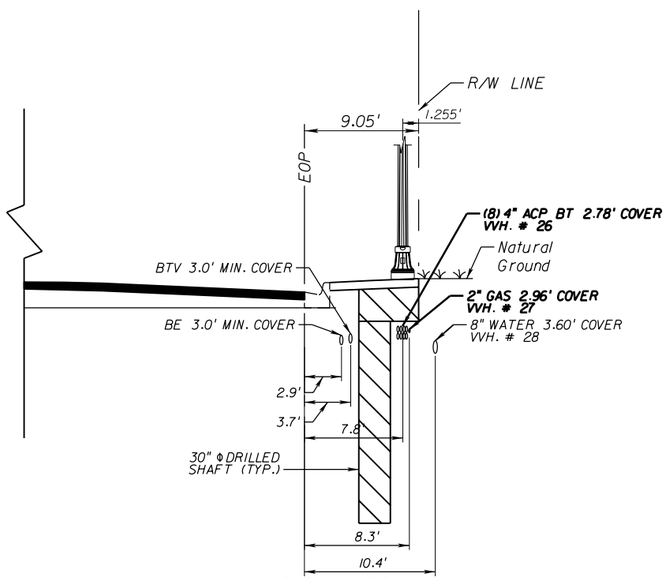

Light Pole # 26
STA. 22+56.74 (48.75' RT)
N.T.S.

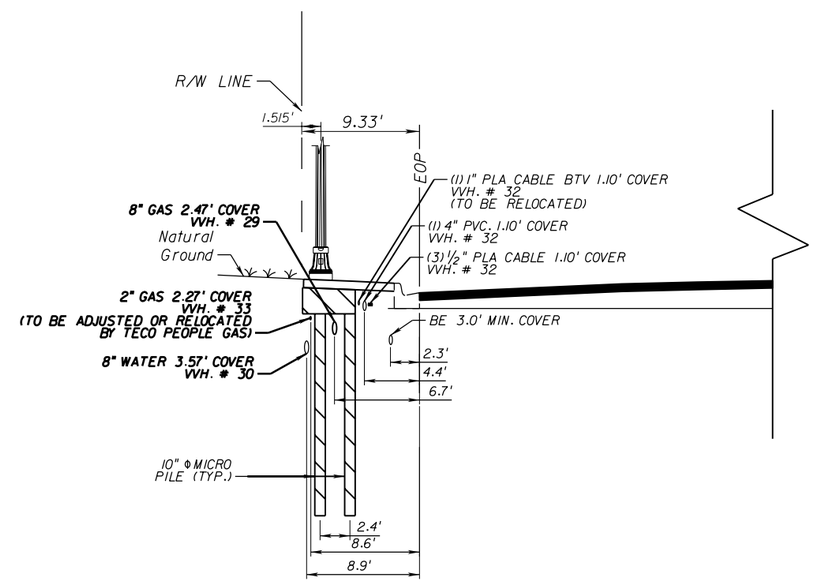

Light Pole # 6
STA. 24+23.03 (48.49' LT)
N.T.S.

REVISIONS			
DATE	DESCRIPTION	DATE	DESCRIPTION

A&P Consulting Transportation Engineers Corp.
10305 N.W. 41 Street, suite 115
Miami, FL 33178
(305) 592-7283 / fax: (305) 593-1594
CA No. : EB-0007797
Eithel M. Sierra, P.E. No. 55401

STATE OF FLORIDA
DEPARTMENT OF TRANSPORTATION

ROAD NO.	COUNTY	FINANCIAL PROJECT ID
A1A	BROWARD	428727-1-52-01

LIGHT POLE LOCATION UTILITY DETAILS

SHEET NO.
L-28

NOTICE: THE OFFICIAL RECORD OF THIS SHEET IS THE ELECTRONIC FILE SIGNED AND SEALED UNDER RULE 61G15-23.003, F.A.C.

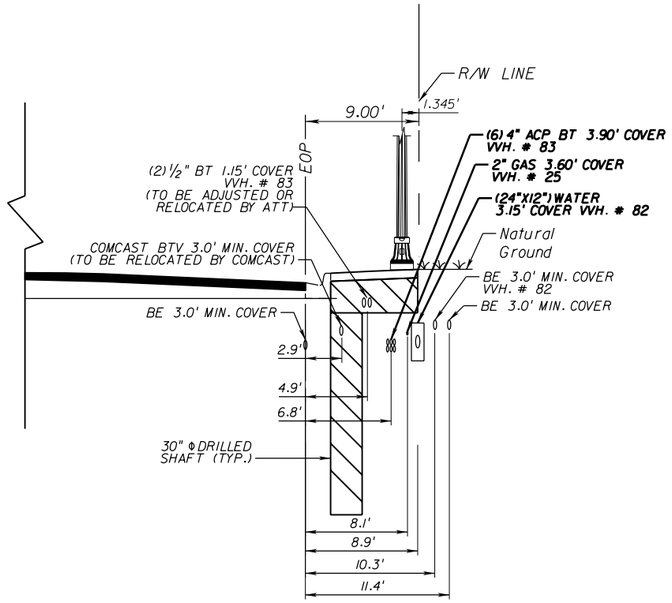

Light Pole # 27
STA. 25+80.08 (48.62' RT)
N.T.S.

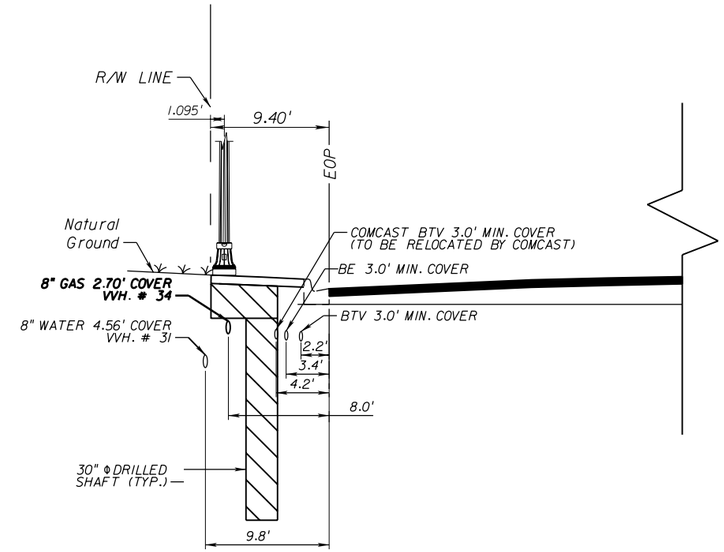

Light Pole # 7
STA. 27+16.08 (48.93' LT)
N.T.S.

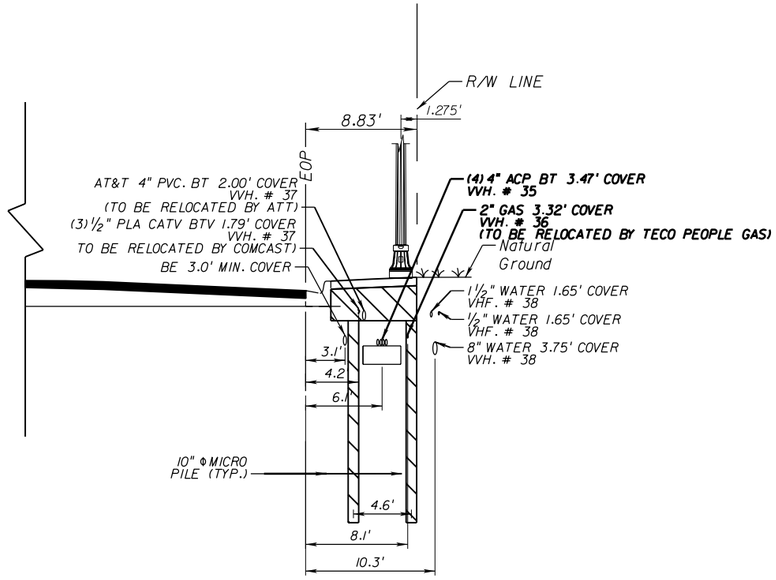

Light Pole # 28
STA. 28+06.29 (48.67' RT)
N.T.S.

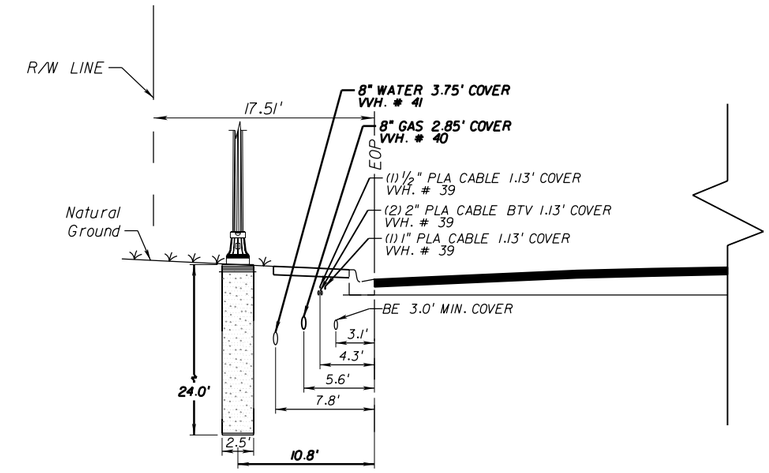

Light Pole # 8
STA. 29+32.91 (51.31' LT)
N.T.S.

REVISIONS			
DATE	DESCRIPTION	DATE	DESCRIPTION

A&P Consulting Transportation Engineers Corp.
10305 N.W. 41 Street, suite 115
Miami, FL 33178
(305) 592-7283 / fax: (305) 593-1594
CA No. : EB-0007797
Eithel M. Sierra, P.E. No. 55401

STATE OF FLORIDA
DEPARTMENT OF TRANSPORTATION

ROAD NO.	COUNTY	FINANCIAL PROJECT ID
A1A	BROWARD	428727-1-52-01

LIGHT POLE LOCATION UTILITY DETAILS

SHEET NO.
L-29

NOTICE: THE OFFICIAL RECORD OF THIS SHEET IS THE ELECTRONIC FILE SIGNED AND SEALED UNDER RULE 61G15-23.003, F.A.C.

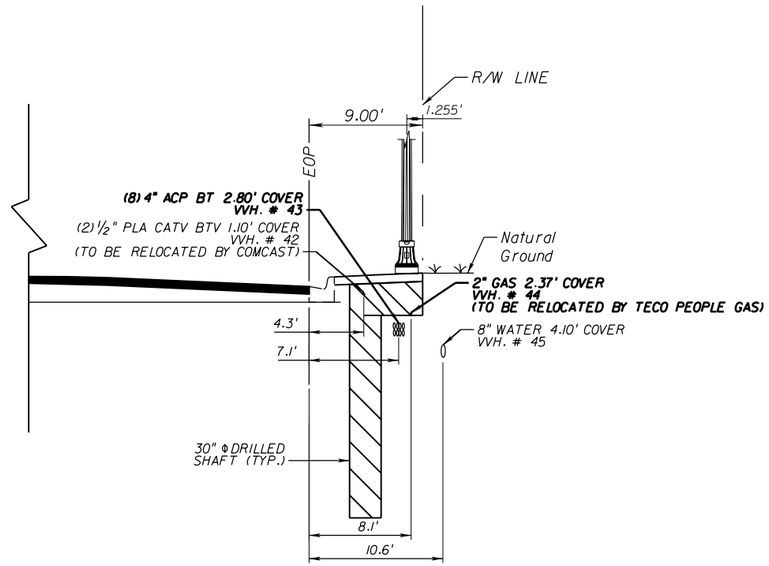

Light Pole # 29
STA. 30+60.34 (48.75' RT)
N.T.S.

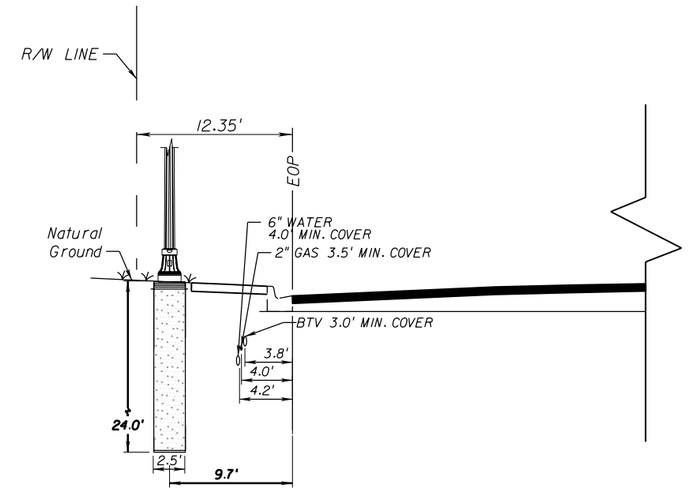

Light Pole # 9
STA. 32+00.00 (67.39' LT)
N.T.S.

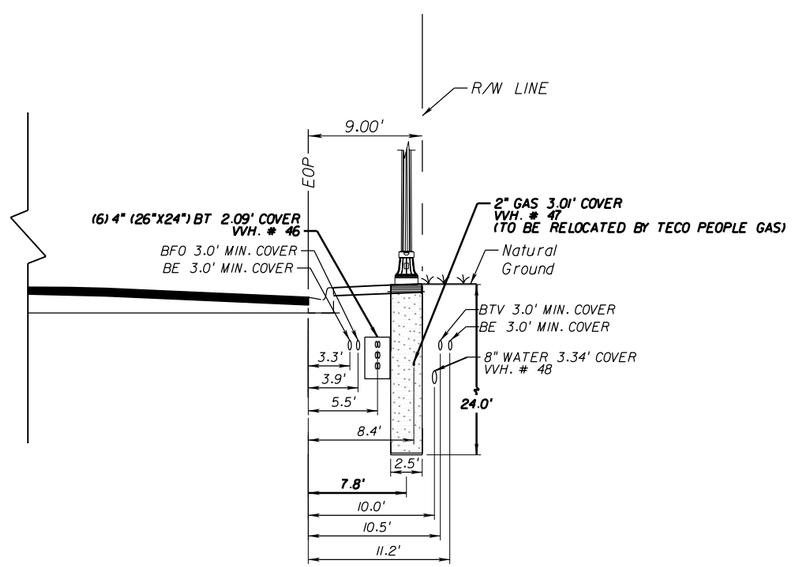

Light Pole # 30
STA. 32+09.74 (48.74' RT)
N.T.S.

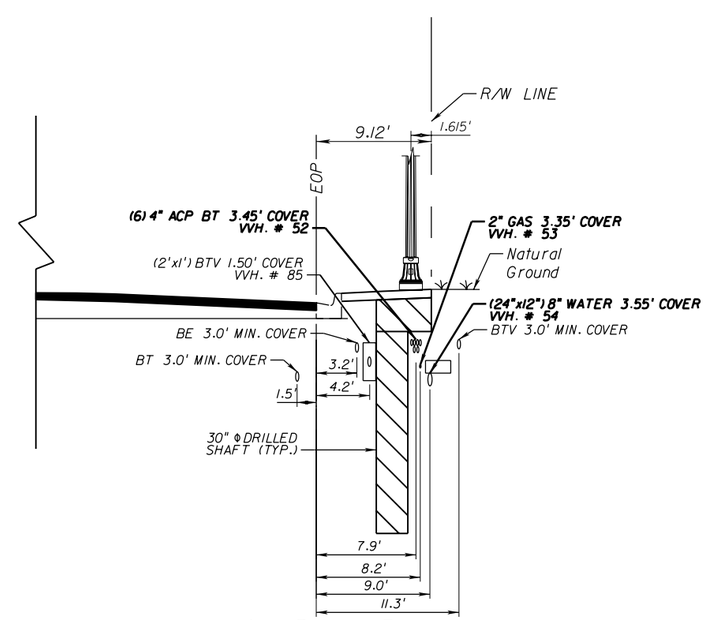

Light Pole # 31
STA. 34+33.51 (48.37' RT)
N.T.S.

REVISIONS			
DATE	DESCRIPTION	DATE	DESCRIPTION

A&P Consulting Transportation Engineers Corp.
10305 N.W. 41 Street, suite 115
Miami, FL 33178
(305) 592-7283 / fax: (305) 593-1594
CA No. : EB-0007797
Eithel M. Sierra, P.E. No. 55401

STATE OF FLORIDA
DEPARTMENT OF TRANSPORTATION

ROAD NO.	COUNTY	FINANCIAL PROJECT ID
A1A	BROWARD	428727-1-52-01

LIGHT POLE LOCATION UTILITY DETAILS

SHEET NO.
L-30

NOTICE: THE OFFICIAL RECORD OF THIS SHEET IS THE ELECTRONIC FILE SIGNED AND SEALED UNDER RULE 61G15-23.003, F.A.C.

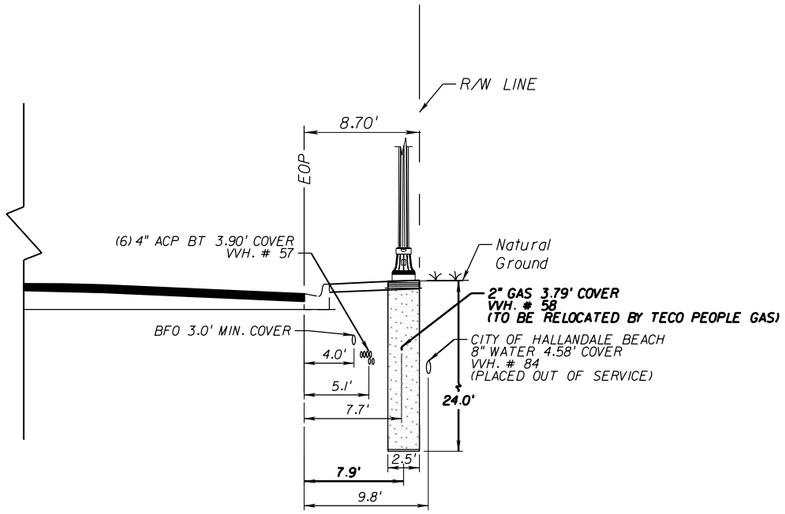

Light Pole # 32
STA. 36+53.99 (48.75' RT)
N.T.S.

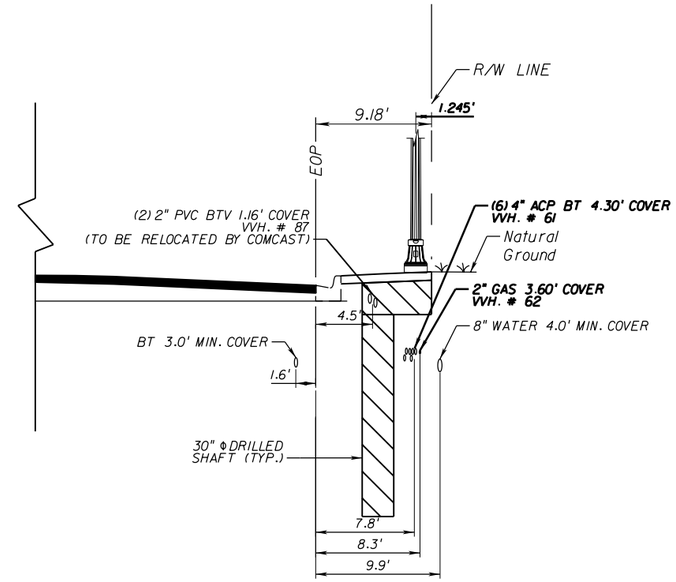

Light Pole # 33
STA. 38+42.40 (48.75' RT)
N.T.S.

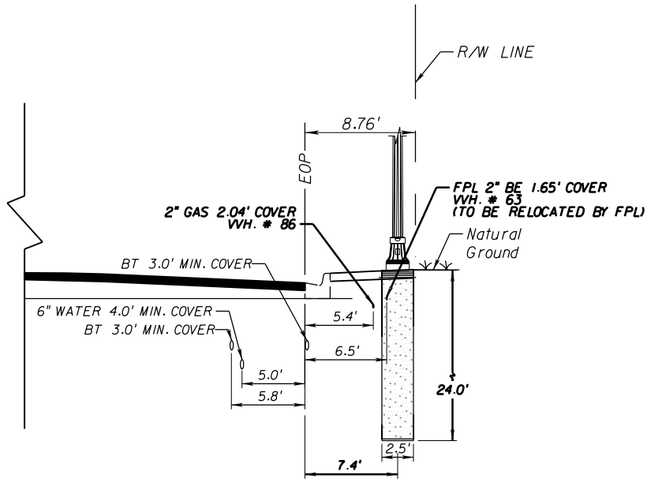

Light Pole # 34
STA. 40+85.41 (64.01' RT)
N.T.S.

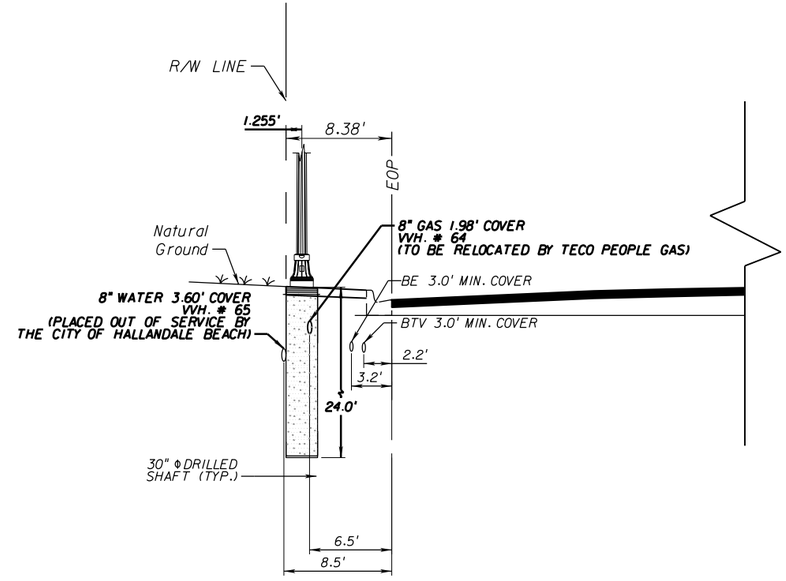

Light Pole # 17
STA. 41+48.85 (48.75' LT)
N.T.S.

REVISIONS			
DATE	DESCRIPTION	DATE	DESCRIPTION

A&P Consulting Transportation Engineers Corp.
10305 N.W. 41 Street, suite 115
Miami, FL 33178
(305) 592-7283 / fax: (305) 593-1594
CA No. : EB-0007797
Eithel M. Sierra, P.E. No. 55401

STATE OF FLORIDA
DEPARTMENT OF TRANSPORTATION

ROAD NO.	COUNTY	FINANCIAL PROJECT ID
A1A	BROWARD	428727-1-52-01

LIGHT POLE LOCATION UTILITY DETAILS

SHEET NO.
L-31

NOTICE: THE OFFICIAL RECORD OF THIS SHEET IS THE ELECTRONIC FILE SIGNED AND SEALED UNDER RULE 61G15-23.003, F.A.C.

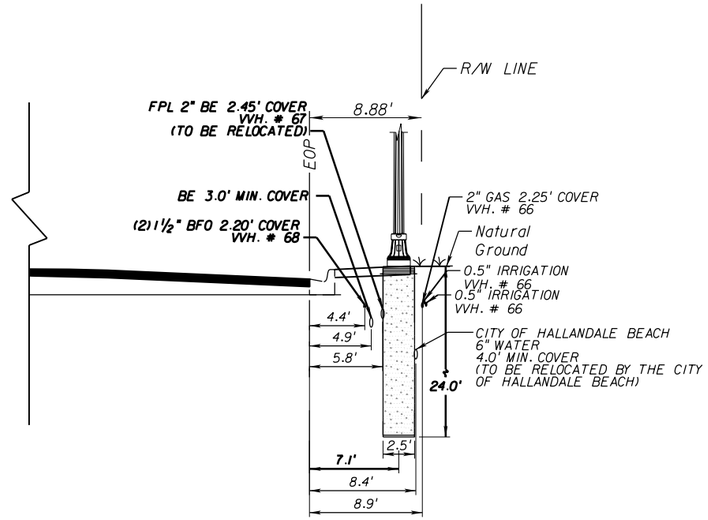

Light Pole # 35
STA. 43+03.48 (68.45' RT)
N.T.S.

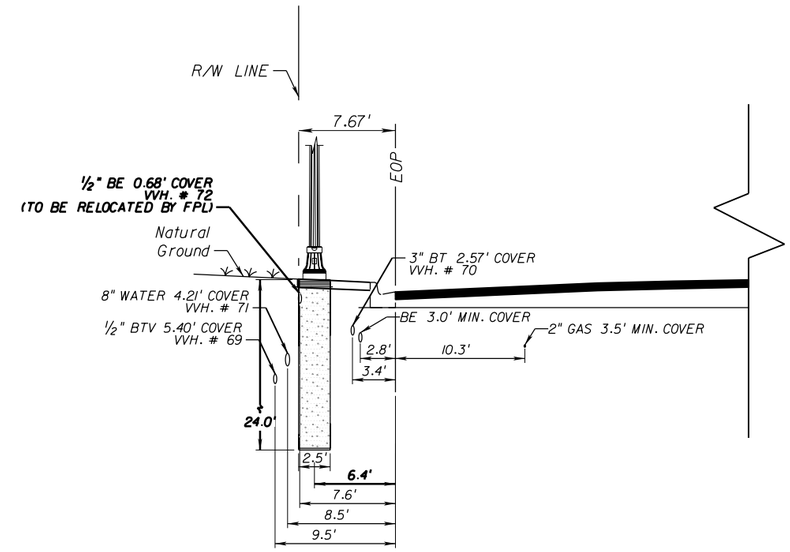

Light Pole # 18
STA. 43+44.23 (48.75' LT)
N.T.S.

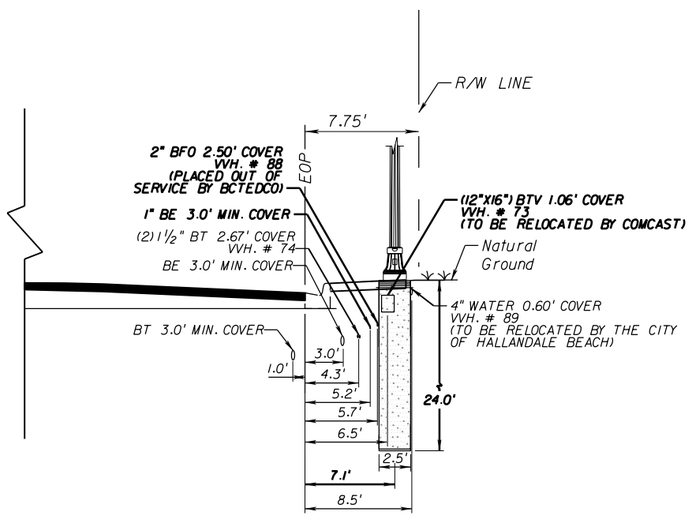

Light Pole # 36
STA. 45+46.40 (83.95' RT)
N.T.S.

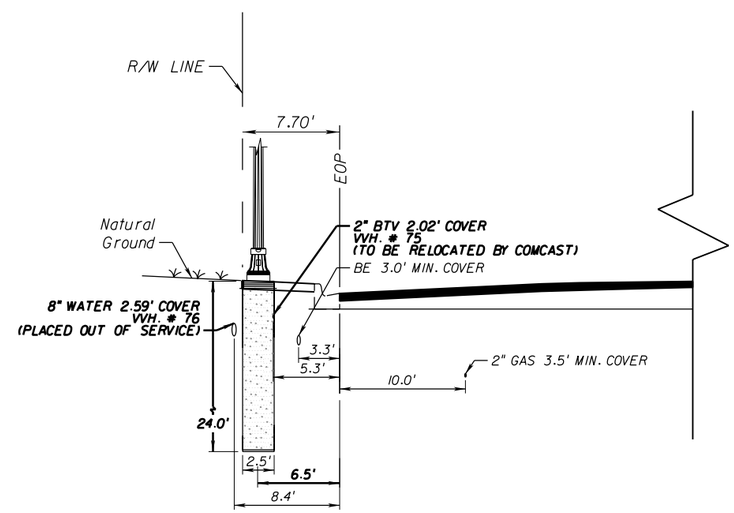

Light Pole # 19
STA. 45+86.78 (48.75' LT)
N.T.S.

REVISIONS			
DATE	DESCRIPTION	DATE	DESCRIPTION

A&P Consulting Transportation Engineers Corp.
10305 N.W. 41 Street, suite 115
Miami, FL 33178
(305) 592-7283 / fax: (305) 593-1594
CA No. : EB-0007797
Eithel M. Sierra, P.E. No. 55401

STATE OF FLORIDA
DEPARTMENT OF TRANSPORTATION

ROAD NO.	COUNTY	FINANCIAL PROJECT ID
A1A	BROWARD	428727-1-52-01

LIGHT POLE LOCATION UTILITY DETAILS

SHEET NO.
L-32

NOTICE: THE OFFICIAL RECORD OF THIS SHEET IS THE ELECTRONIC FILE SIGNED AND SEALED UNDER RULE 61G15-23.003, F.A.C.

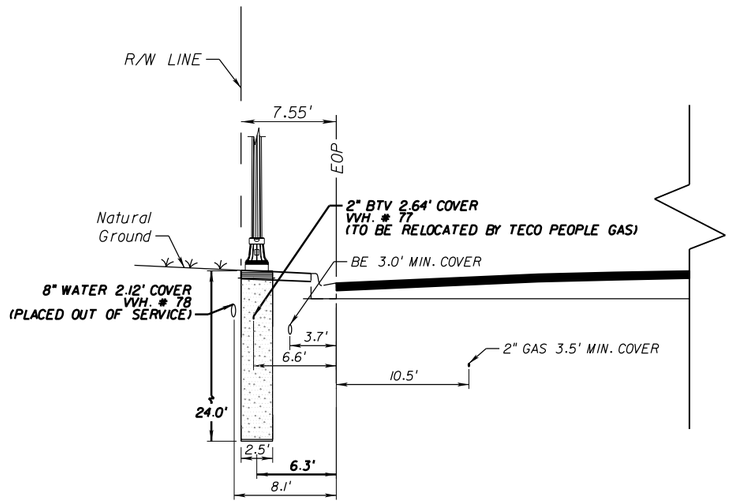

Light Pole # 20
STA. 47+91.62 (48.75' LT)
N.T.S.

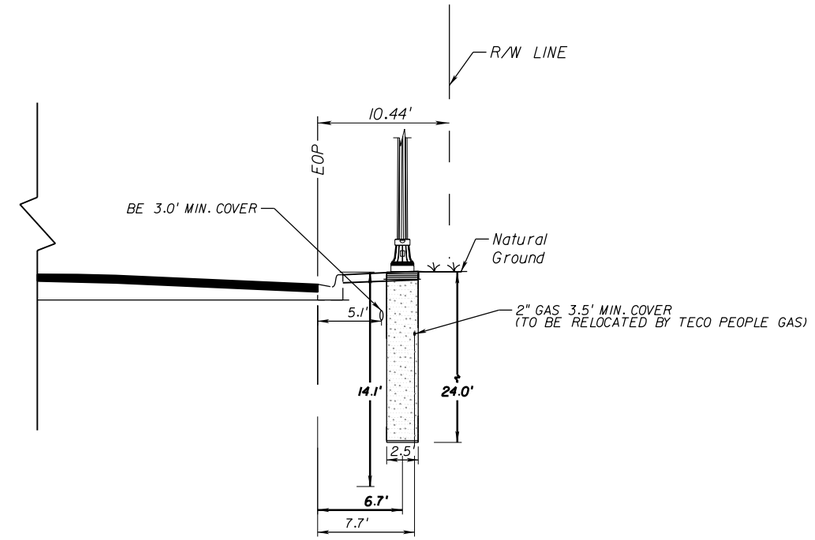

Light Pole # 37
STA. 48+17.48 (80.44' RT)
N.T.S.

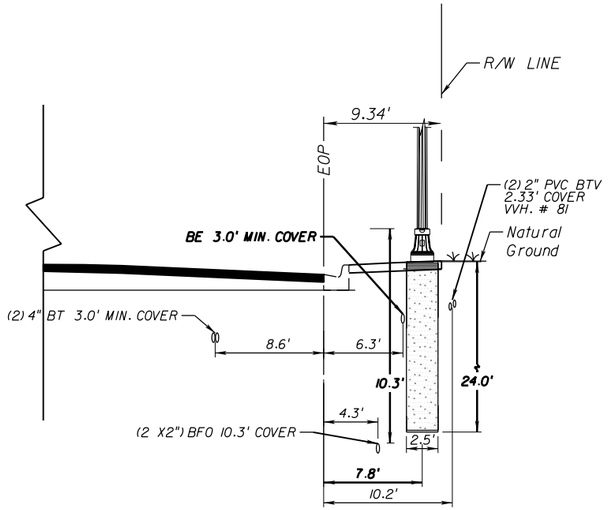

Light Pole # 38
STA. 49+97.37 (74.89' RT)
N.T.S.

NOTICE: THE OFFICIAL RECORD OF THIS SHEET IS THE ELECTRONIC FILE SIGNED AND SEALED UNDER RULE 61G15-23.003, F.A.C.

REVISIONS			
DATE	DESCRIPTION	DATE	DESCRIPTION

A&P Consulting Transportation Engineers Corp.
10305 N.W. 41 Street, suite 115
Miami, FL 33178
(305) 592-7283 / fax: (305) 593-1594
CA No. : EB-0007797
Eithel M. Sierra, P.E. No. 55401

STATE OF FLORIDA
DEPARTMENT OF TRANSPORTATION

ROAD NO.	COUNTY	FINANCIAL PROJECT ID
A1A	BROWARD	428727-1-52-01

LIGHT POLE LOCATION
UTILITY DETAILS

SHEET NO.
L-33

emsierra 12/2/2013 7:11:21 PM H:\e\Projects\4287271520l\lighting\udtlt03.DGN

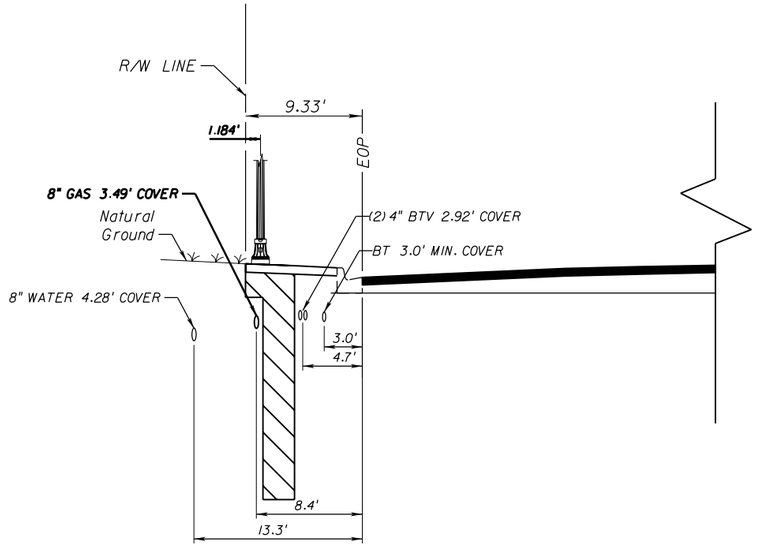

Pedestrian Light Pole # 1
STA. 12+87.16 (48.74' LT)
N.T.S.

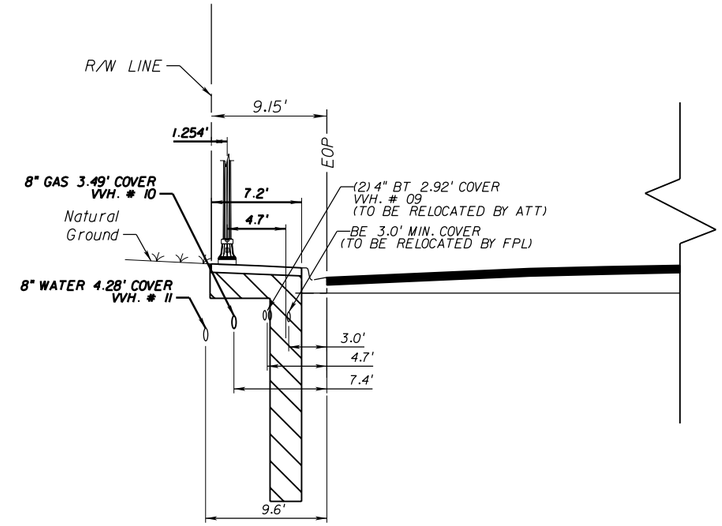

Pedestrian Light Pole # 2
STA. 14+91.43 (48.75' LT)
N.T.S.

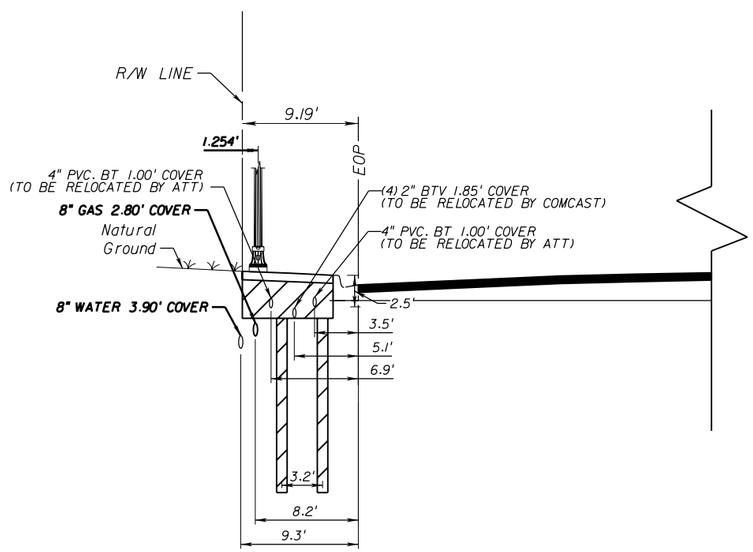

Pedestrian Light Pole # 3
STA. 17+31.44 (48.83' LT)
N.T.S.

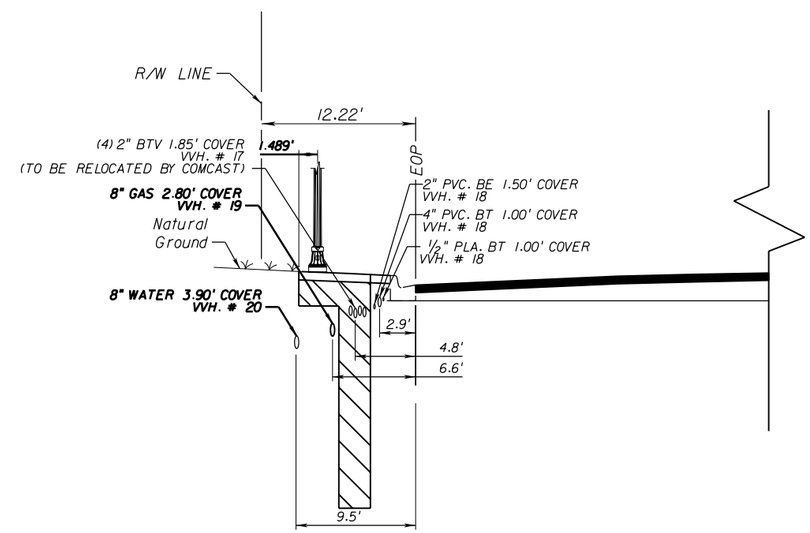

Pedestrian Light Pole # 4
STA. 18+80.19 (48.55' LT)
N.T.S.

NOTICE: THE OFFICIAL RECORD OF THIS SHEET IS THE ELECTRONIC FILE SIGNED AND SEALED UNDER RULE 61G15-23.003, F.A.C.

REVISIONS			
DATE	DESCRIPTION	DATE	DESCRIPTION

A&P Consulting Transportation Engineers Corp.
10305 N.W. 41 Street, suite 115
Miami, FL 33178
(305) 592-7283 / fax: (305) 593-1594
CA No. : EB-0007797
Eithel M. Sierra, P.E. No. 55401

STATE OF FLORIDA
DEPARTMENT OF TRANSPORTATION

ROAD NO.	COUNTY	FINANCIAL PROJECT ID
A1A	BROWARD	428727-1-52-01

LIGHT POLE LOCATION UTILITY DETAILS

SHEET NO.
L-34

emsierra 12/2/2013 7:11:22 PM H:\e\Projects\42872715201\lighting\udtlt04.dgn

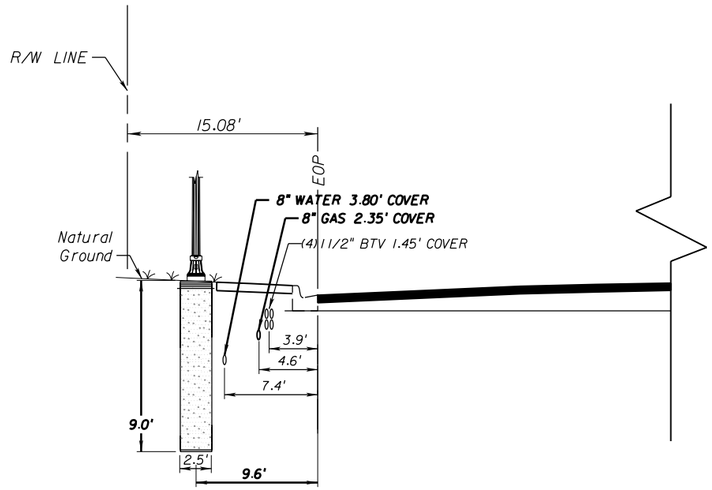

Pedestrian Light Pole # 10
STA. 33+15.23 (55.95' LT)
N.T.S.

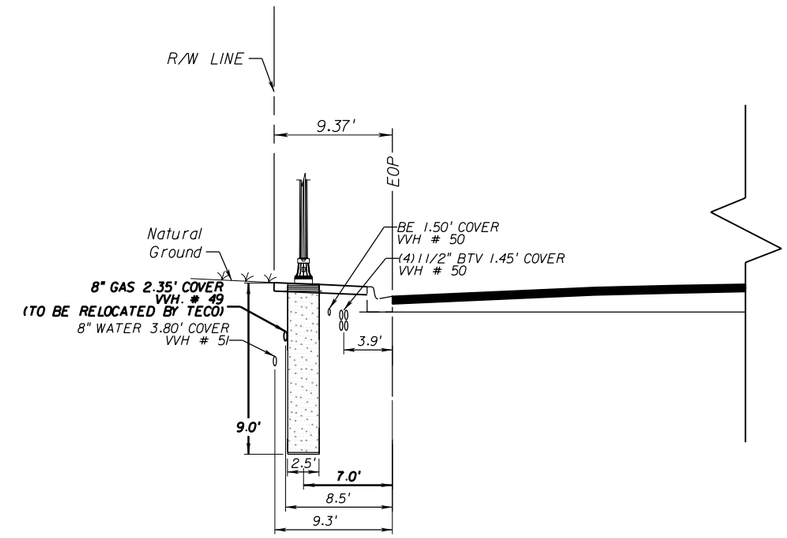

Pedestrian Light Pole # 11
STA. 34+18.70 (47.67' LT)
N.T.S.

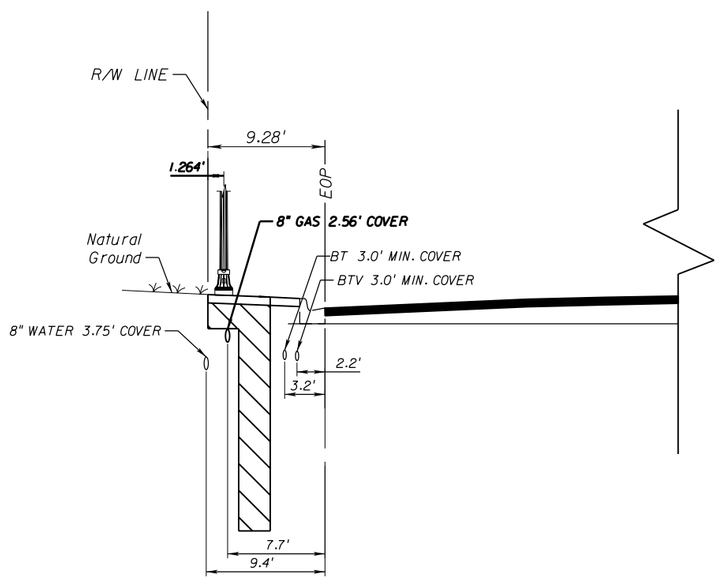

Pedestrian Light Pole # 12
STA. 35+20.38 (48.75' LT)
N.T.S.

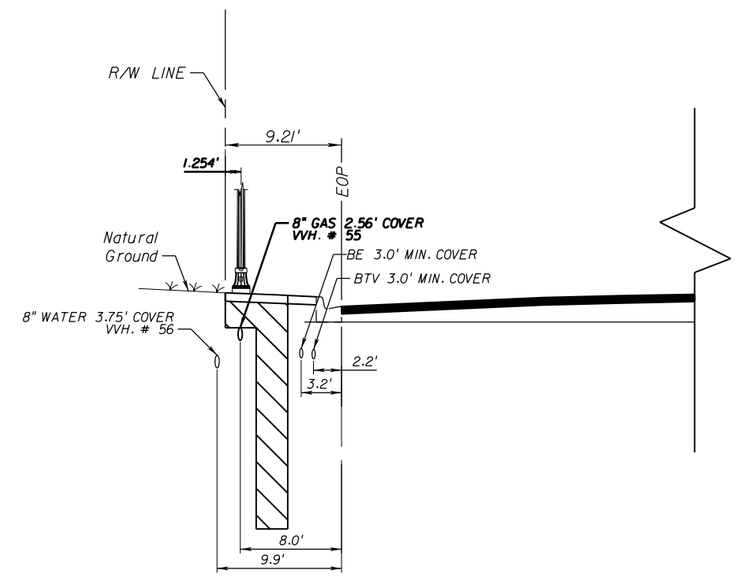

Pedestrian Light Pole # 13
STA. 36+46.59 (48.76' LT)
N.T.S.

REVISIONS			
DATE	DESCRIPTION	DATE	DESCRIPTION

A&P Consulting Transportation Engineers Corp.
10305 N.W. 41 Street, suite 115
Miami, FL 33178
(305) 592-7283 / fax: (305) 593-1594
CA No. : EB-0007797
Eithel M. Sierra, P.E. No. 55401

STATE OF FLORIDA
DEPARTMENT OF TRANSPORTATION

ROAD NO.	COUNTY	FINANCIAL PROJECT ID
A1A	BROWARD	428727-1-52-01

LIGHT POLE LOCATION UTILITY DETAILS

SHEET NO.
L-35

NOTICE: THE OFFICIAL RECORD OF THIS SHEET IS THE ELECTRONIC FILE SIGNED AND SEALED UNDER RULE 61G15-23.003, F.A.C.

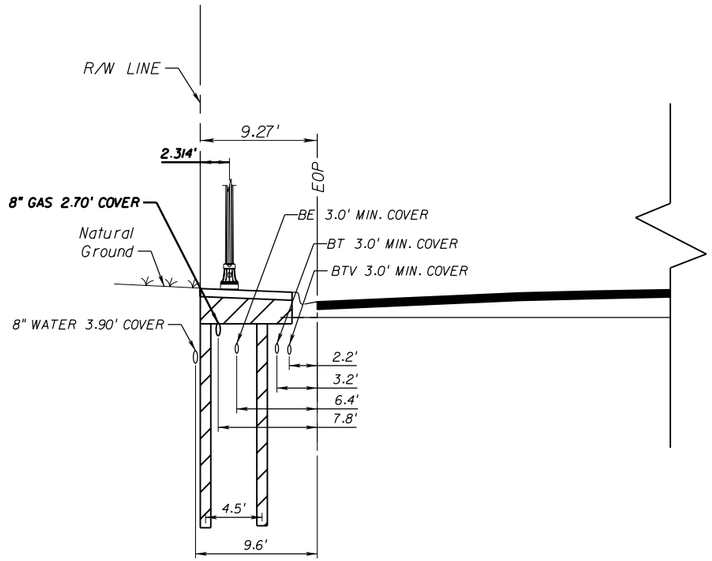

Pedestrian Light Pole # 14
STA. 37+62.49 (47.68' LT)
N.T.S.

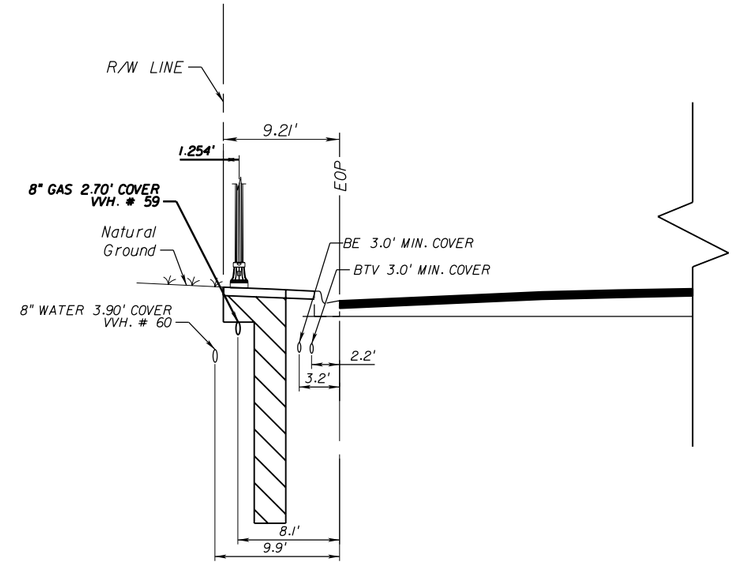

Pedestrian Light Pole # 15
STA. 38+36.99 (48.75' LT)
N.T.S.

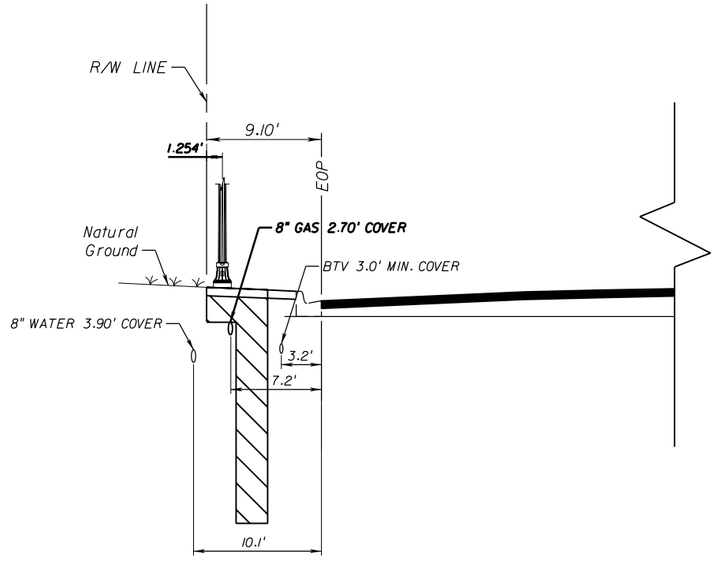

Pedestrian Light Pole # 16
STA. 39+49.09 (48.75' LT)
N.T.S.

NOTICE: THE OFFICIAL RECORD OF THIS SHEET IS THE ELECTRONIC FILE SIGNED AND SEALED UNDER RULE 61G15-23.003, F.A.C.

REVISIONS			
DATE	DESCRIPTION	DATE	DESCRIPTION

A&P Consulting Transportation Engineers Corp.
10305 N.W. 41 Street, suite 115
Miami, FL 33178
(305) 592-7283 / fax: (305) 593-1594
CA No. : EB-0007797
Eithel M. Sierra, P.E. No. 55401

STATE OF FLORIDA
DEPARTMENT OF TRANSPORTATION

ROAD NO.	COUNTY	FINANCIAL PROJECT ID
A1A	BROWARD	428727-1-52-01

LIGHT POLE LOCATION UTILITY DETAILS

SHEET NO.
L-36