DAVID POSNACK JEWISH DAY SCHOOL

412 SW 11TH STREET. HALLANDALE BEACH, FL 33009

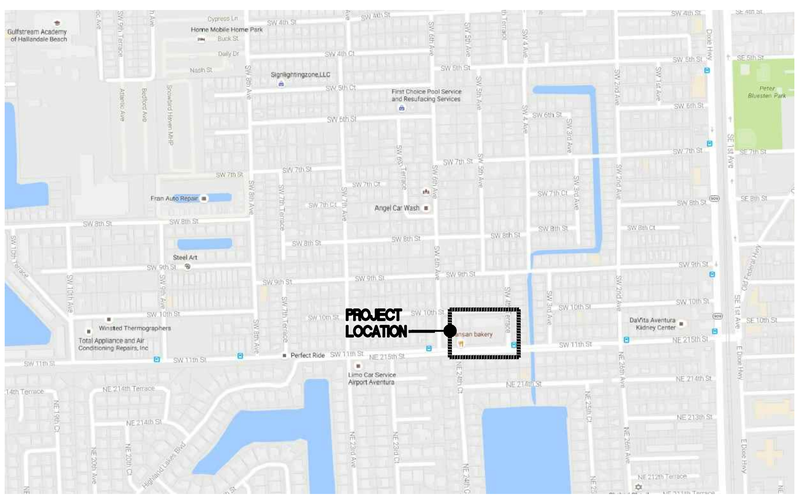

LOCATION MAP
N.T.S.

ARCHITECT

SYNALOVSKI ROMANIK SAYE, LLC.

1800 ELLER DRIVE, SUITE 500
FORT LAUDERDALE, FL 33316
PH: 954-961-6806 FAX: 954-961-6807

LANDSCAPE ARCHITECT

BARRANCO-RLA, INC.

888 S. ANDREWS AVE. SUITE 300
FORT LAUDERDALE, FL 33316
PH: 954-667-7814

CIVIL ENGINEER

CORDOVA RODRIGUEZ & ASSOCIATES, INC.

6941 SW 196TH AVE. SUITE 28
PEMBROKE PINES, FL 33332
PH: 954-880-0180 FAX: 954-880-0181

TRAFFIC ENGINEER

KBP CONSULTING, INC.

8400 NORTH UNIVERSITY DRIVE. SUITE 309
TAMARAC, FL 33321
PH: 954-560-7103

DRAWING INDEX

T-001	COVER SHEET
	BOUNDARY SURVEY
AS-101	ARCHITECTURAL SITE PLAN
A-101	FIRST FLOOR PLAN
A-102	SECOND FLOOR PLAN
A-201	BUILDING ELEVATIONS
PH-101	PHOTOMETRIC PLAN
L-1.0	TREE DISPOSITION PLAN
L-2.0	PROPOSED LANDSCAPE PLAN
C-101	DEMOLITION PLAN
C-201	PAVING GRADING AND DRAINAGE PLAN
C-201.1	PAVING GRADING AND DRAINAGE SECTIONS
C-202	PAVING GRADING AND DRAINAGE DETAILS
C-202.1	PAVING GRADING AND DRAINAGE DETAILS
C-203	STORM-WATER POLLUTION PREVENTION PLAN
C-301	WATER AND SEWER PLAN
C-302	WATER AND SEWER DETAILS
C-401	SIGNING AND MARKING PLAN
C-501	SPECIFICATIONS

SYNALOVSKI ROMANIK SAYE
Architecture • Planning • Interior Design

1800 Eller Drive, Suite 500
Fort Lauderdale, FL 33316

T 954.961.6806
F 954.961.6807

www.synalovski.com

Manuel Synalovski, AIA
AR 0011628
SEAL

LICENSE NO. AA26001863

DAVID POSNACK JEWISH DAY SCHOOL

412 SW 11TH STREET
HALLANDALE BEACH, FL 33009

CLIENT: DPJDS

REV	DATE	DESCRIPTION
1	04/04/18	DRC COMMENTS

DESIGN DELIVERABLE: **DRC SUBMITTAL**

ISSUE DATE: **03/01/18**

PROJECT NUMBER: **1415-160815**

DRAWN BY: **JS**

CHECKED BY: **MS**

Copyright (c) by SYNALOVSKI ROMANIK SAYE, LLC
All Rights Reserved.

SHEET TITLE:

COVER SHEET

SHEET NUMBER:

T-001

E:\1509-171128 DPJDS Hallandale\Drawings\Phase Submittals\DWG\DRC\T-001-Cover.dwg 5/9/2018 5:16:12 PM

MAP OF BOUNDARY SURVEY

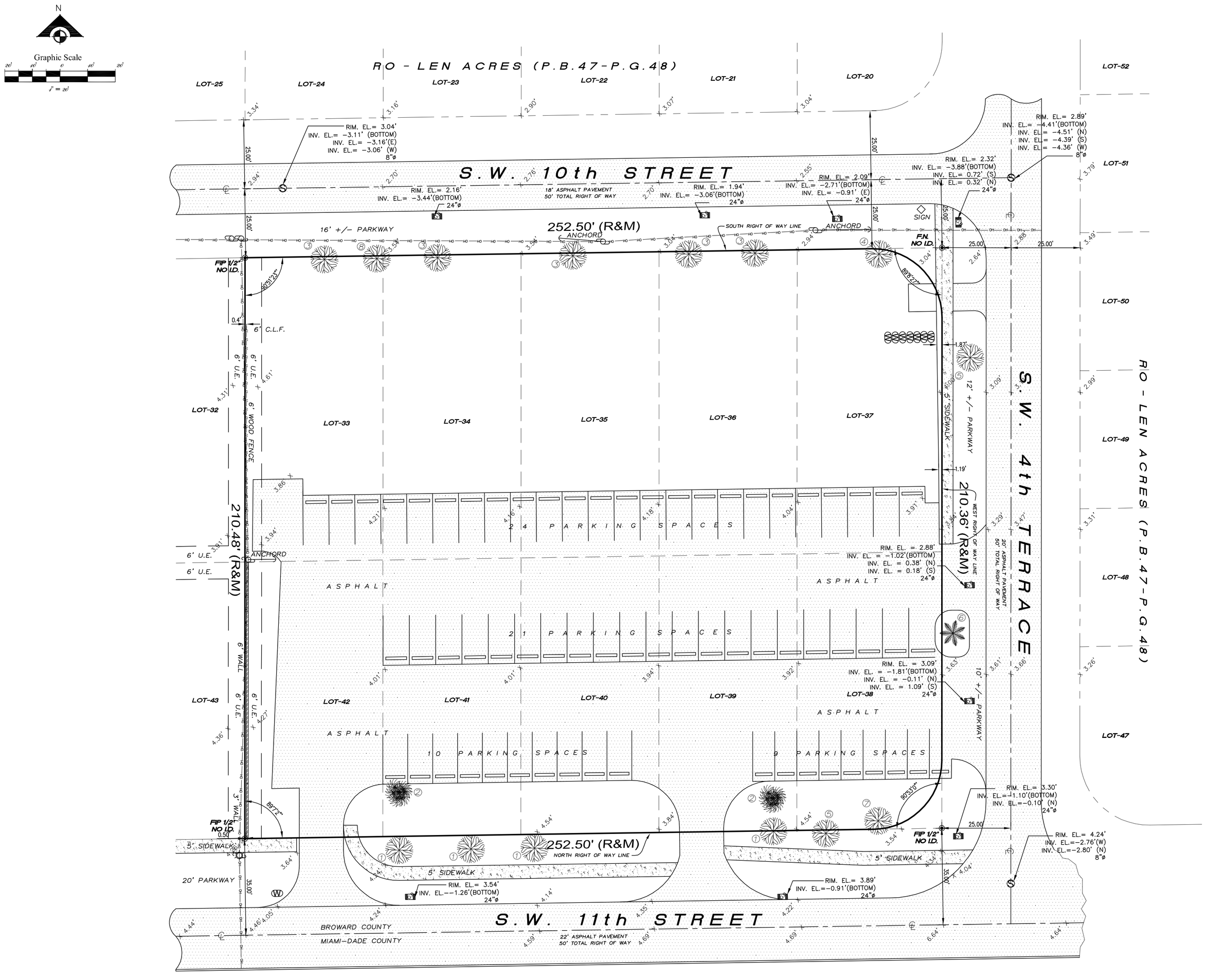

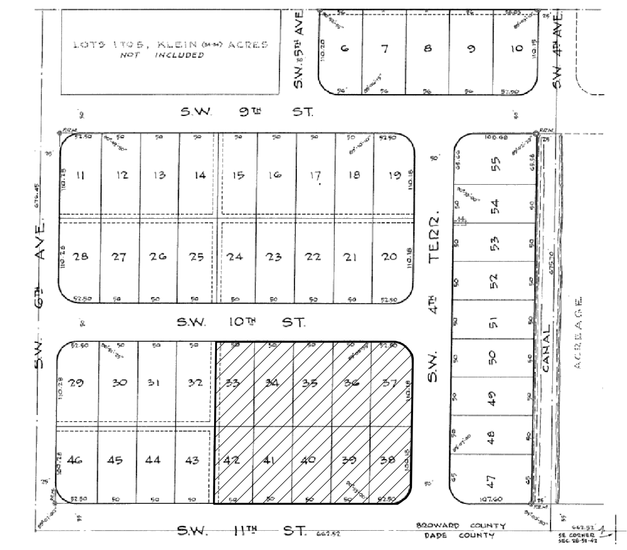

LOCATION MAP
(NOT TO SCALE)

LEGAL DESCRIPTION:

Lots 33 through 42, both included, of RO-LEN ACRES, according to the plat thereof, as recorded in Plat Book 47, at Page 48, of the Public Records of Broward County, Florida.

TREE LEGEND

	NAME	SCIENTIFIC	DIAMETER	HEIGHT	CANOPY
1	BLACK OLIVE	BUCIDA BUCERAS	20"	30'	20'
2	BAMBO PALM CLUSTER	CHAMAEDOREA ERUMPENS	4"	10'	10'
3	BLACK OLIVE	BUCIDA BUCERAS	18"	35'	18'
4	BLACK OLIVE	BUCIDA BUCERAS	24"	40'	30'
5	BLACK OLIVE	BUCIDA BUCERAS	14"	20'	20'
6	CABBAGE PALM	SABAL PALMETTO	12"	18'	10'
7	NORFOLK ISLAND PINE	ARAUCARIA HETEROPHYLLA	12"	40'	20'
8	BLACK OLIVE	BUCIDA BUCERAS	8"	10'	6'

LEGEND OF SURVEY ABBREVIATIONS

A/C = AIR CONDITIONING
A.E. = ARC DISTANCE
BLDG = BUILDING
C.B. = CATCH BASIN
C.B.S. = CONCRETE BLOCK STRUCTURE
CH. = CHORD DISTANCE
CL. = CLEAR
C/L = CENTER LINE
C.L.F. = CHAIN LINK FENCE
CONC = CONCRETE
C.M.P. = CORRUGATED METAL PIPE
F.H. = FIRE HYDRANT
F.N. = FOUND NAIL
F.I.P. = FOUND IRON PIPE
FN&D = FOUND NAIL&DISC
F.R.B. = FOUND REBAR
MH = MANN HOLE
L.P. = LIGHT POLE
(M) = MEASURED
(R) = RECORD
P.D.H. = FOUND DRILL HOLE
P.L. = PROPERTY LINE
NGVD = NATIONAL GEODETIC VERTICAL DATUM
B.C. = BLOCK CORNER
O/L = ON LINE
P.C. = POINT OF CURVATURE
P.T. = POINT OF TANGENCY
P.B. = PLAT BOOK
P.C.P = PERMANENT CONTROL POINT
PG. = PAGE
B/C = BLOCK CORNER
P/L = PROPERTY LINE
N.T.S. = NOT TO SCALE
R = RADIUS
RAD. = RADIAL
RES. = RESIDENTIAL
R&M = RECORD & MEASURE
R/W = RIGHT OF WAY
SEC. = SECTION
S.C.P. = STEEL CONCRETE PIPE No 5034
STY. = STORY
SWK. = SIDEWALK
U.E. = UTILITY EASEMENT
W.F. = WOOD FENCE
= OVERHEAD ELECTRIC
= WOOD FENCE
= CHAIN LINK FENCE
= CONCRETE
= C.B.S. WALL
= ASPHALT PAVEMENT
= BELLSOUTH BOX
= CABLE BOX
= POWER POLE
= LIGHT POLE
= CLEAN-OUT
= GAS TANK
= FIRE HYDRANT
= SAN. MANHOLE
= WATER VALVE
= ELEVATIONS
= CATCH BASIN
= WATER METER
= ELECTRIC METER
= TRAFFIC LIGHT

FLOOD ZONE : WITHIN ZONE: AH ELEVATION: 5.0' COMMUNITY: 125110 PANEL No.: 0732 SUFFIX: H DATE: 08/18/2014	**ORDER NO.:** M-10626 **FIELD BOOK:** "FILE" **DATE:** FEBRUARY 22, 2016 **UPDATE:** OCTOBER 13, 2016 **UPDATE:**	**PROPERTY ADRESS:** 412 S.W. 11th Street Hallandale Beach, FL. 33009 **FOR:** EILEEN SCHWARTZ & LYNN SCHWARTZ

I HEREBY CERTIFY: THAT THIS DRAWING REPRESENTS THERESULT OF A SURVEY OF THE WITHIN DESCRIBED PROPERTY AND THIS DRAWING AND SIAD SURVEY WERE PREPARED BY ME OR UNDER MY DIRECTION.
THERE ARE NO ENCROACHMENTS UNLESS SHOWN THEREON.

THIS SURVEY IS NOT VALID WITHOUT THE SIGNATURE AND RAISED SEAL OF A FLORIDA LICENSED SURVEYOR AND MAPPER

NOTES:
* THIS SURVEY DOES NOT REFLECT OR DETERMINE OWNERSHIP.
* EXAMINATION OF THE ABSTRACT OF TITLE WILL HAVE TO BE MADE TO DETERMINE RECORDED INSTRUMENTS, IF ANY, AFFECTING THE PROPERTY THIS SURVEY IS SUBJECT TO DEDICATIONS, LIMITATIONS, RESTRICTIONS, RESERVATIONS OR EASEMENTS OF RECORDS.
* LEGAL DESCRIPTIONS PROVIDED BY CLIENT OR ATTESTING TITLE COMPANY.
* UNLESS OTHERWISE NOTED, THIS FIRM HAS NOT AN ATTEMPTED TO LOCATE FOOTINGS AND/OR FOUNDATIONS.
* NOT VISIBLE ENCROACHMENTS WERE FOUND ON THE PROPERTY, UNLESS SHOWN.
* IF SHOWN ELEVATIONS ARE REFERRED TO N.A.V.D. 1988
* BENCH MARK USED No. N-733, (MIAMI-DADE COUNTY), WITH ELEVATION: 6.03'(NGVD 1929) CONVERTED TO 4.52' (NAVD 1988)

NARCISO J. RAMIREZ
PROFESSIONAL LAND SURVEYOR &
MAPPER No. 2779
STATE OF FLORIDA

8341 SUNSET DRIVE
MIAMI, FL. 33143
TEL: (305) 596-0888 & (305) 596-0990
E-MAIL: atlanticservice@bellsouth.net

BUILDING DATA								
BUILDING STORY	BUILDING USE	GROSS BUILDING AREA (INCLUDES EXT. WALLS)	AREA/ OCCUPANTS FOR PARKING CALCULATIONS	PARKING REQUIREMENT PER FBC 2017 SIXTH EDITION BUILDING SEC. 453.10.2.8	PARKING REQUIRED	PARKING PROVIDED	ADA PARKING REQUIRED	ADA PARKING PROVIDED
GROUND FLOOR	KINDERGARTEN THROUGH 2ND GRADE	15,012 S.F.	20 STAFF OCCUPANTS 144 STUDENTS	1/ FACULTY AND STAFF MEMBER + 1/100 STUDENTS (VISITORS)	20 SPACES 1.44 SPACES		FBC ACCESS. TABLE 208.2	
SECOND FLOOR	3RD THROUGH 5TH GRADE	11,847 S.F.	12 STAFF OCCUPANTS 144 STUDENTS	1/ FACULTY AND STAFF MEMBER + 1/100 STUDENTS (VISITORS)	12 SPACES 1.44 SPACES		FBC ACCESS. TABLE 208.2	
TOTAL		26,859 S.F.			35 SPACES	40 SPACES	2 SPACES	2 SPACES

SITE INFORMATION:

CURRENT ZONING: B-L BUSINESS LIMITED DISTRICT
PROPOSED USE: SCHOOL (KINDERGARTEN THROUGH 5TH GRADE)

UTILITIES:
ELECTRIC - FP & L
WATER AND SEWER - CITY OF HALLANDALE BEACH

SITE CALCULATIONS

TOTAL SITE AREA : (1.21 ACRES)	**52,856 SQ. FT.**	
TOTAL LANDSCAPE AREA :	**15,222 SQ. FT.**	**28.80 %**
TOTAL IMPERVIOUS AREA :	**37,634 SQ. FT.**	**71.20 %**

LANDSCAPE AREA:

TOTAL REQUIRED:	**7,928 SQ. FT.**	**15.00 %**
TOTAL PROVIDED:	**15,222 SQ. FT.**	**28.80 %**

IMPERVIOUS AREA:

TOTAL PROVIDED:	**37,634 SQ. FT.**	**71.20 %**
BUILDING FOOTPRINT AREA:	**15,012 SQ. FT.**	**28.40 %**
WALKS:	**3,509 SQ. FT.**	**6.64 %**
VEHICULAR USE AREA (V. U. A.):	**19,113 SQ. FT.**	**36.16 %**

LEGAL DESCRIPTION

LOTS 33 THROUGH 42, BOTH INCLUDED, OF RO-LEN ACRES, ACCORDING TO THE PLAT THEREOF, AS RECORDED IN PLAT BOOK 47, AT PAGE 48, OF THE PUBLIC RECORDS OF BROWARD COUNTY, FLORIDA.

LOCATION MAP

SITE DEVELOPMENT STANDARDS SEC. 32-149 (d)		
	REQUIRED	PROVIDED
LOT AREA	7,500 S.F. MIN.	52,856 S.F.
LOT WIDTH	75' MIN.	252.5'
FRONT SETBACK	50' MIN.	65'
REAR SETBACK	10' MIN.	10'
SIDE CORNER SETBACK	25' MIN.	25'-2"
ADJACENT RESIDENTIAL SETBACK	25' MIN.	25'
BUILDING HEIGHT	25' MAX.	28' (VARIANCE)
LANDSCAPE AREA	15% MIN.	28.80%

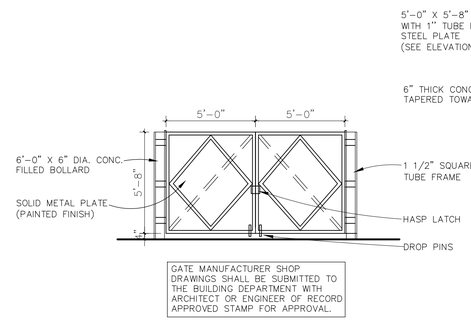

GATE ELEVATION
SCALE: 1/4"= 1'-0"

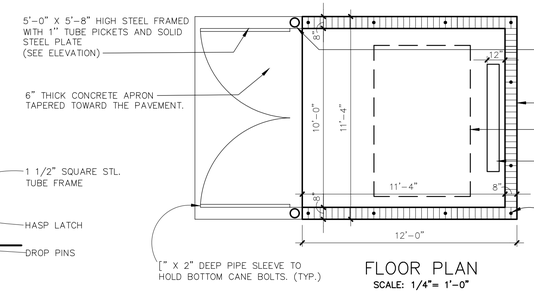

FLOOR PLAN
SCALE: 1/4"= 1'-0"

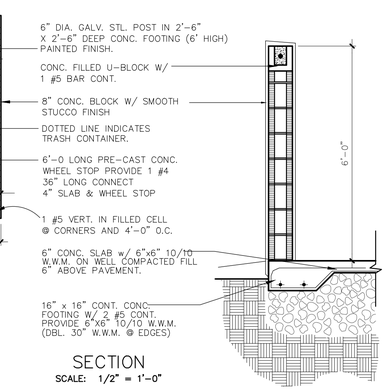

SECTION
SCALE: 1/2" = 1'-0"

3 DUMPSTER DETAIL
SCALE: AS NOTED

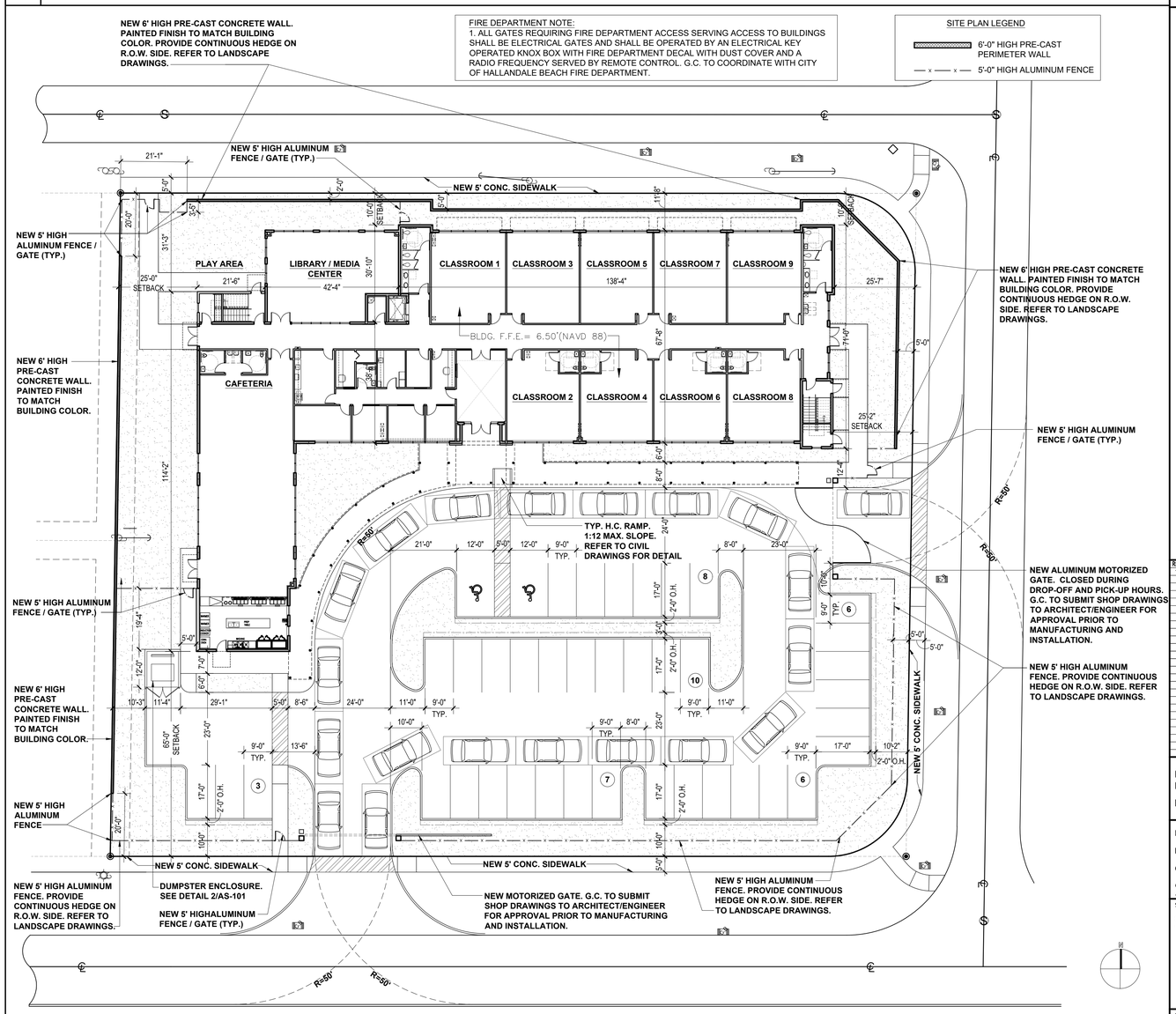

2 BUILDING/ SITE INFORMATION

1 SITE PLAN
SCALE: 1" = 20'-0"

SYNALOVSKI ROMANIK SAYE
Architecture • Planning • Interior Design
1800 Eller Drive, Suite 500
Fort Lauderdale, FL 33316
T 954.961.6806
F 954.961.6807
www.synalovski.com
Manuel Synalovski, AIA
AR 0011628
SEAL
LICENSE NO. AA26001863

DAVID POSNACK JEWISH DAY SCHOOL

412 SW 11TH STREET
HALLANDALE BEACH, FL 33009

CLIENT: DPJDS

REV	DATE	DESCRIPTION
1	04/04/18	DRC COMMENTS

DESIGN DELIVERABLE: **DRC SUBMITTAL**
ISSUE DATE: **03/01/18**

PROJECT NUMBER: **1415-160815**
DRAWN BY: **JS**
CHECKED BY: **MS**

Copyright (c) by SYNALOVSKI ROMANIK SAYE, LLC
All Rights Reserved.

SHEET TITLE:
SITE PLAN

SHEET NUMBER:
AS-101

E:\1509-171128 DPJDS Hallandale\Drawings\Phase Submittals\DWG\DRC\AS-101 (4).dwg 5/9/2018 5:15:15 PM

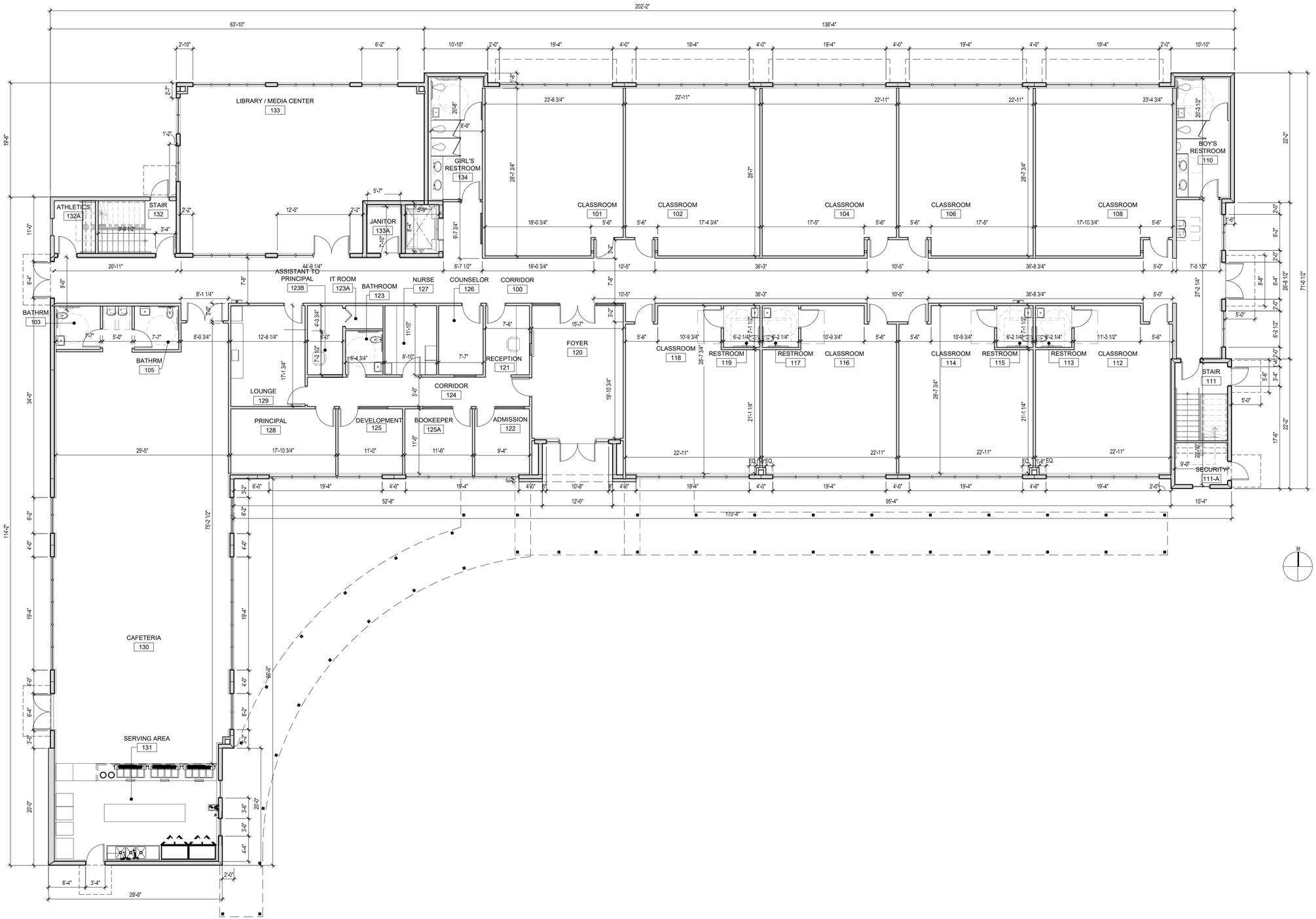

SYNALOVSKI ROMANIK SAYE
Architecture • Planning • Interior Design

1800 Eller Drive, Suite 500
Fort Lauderdale, FL 33316

T 954.961.6806
F 954.961.6807

www.synalovski.com

Manuel Synalovski, AIA
AR 0011698
SEAL

LICENSE NO. AA26001863

DAVID POSNACK JEWISH DAY SCHOOL

412 SW 11TH STREET
HALLANDALE BEACH, FL 33009

CLIENT: DPJDS

REV	DATE	DESCRIPTION
1	04/04/18	DRC COMMENTS

DESIGN DELIVERABLE: DRC SUBMITTAL

ISSUE DATE: 03/01/18

PROJECT NUMBER: 1415-160815

DRAWN BY: SH

CHECKED BY: MS

Copyright (c) by SYNALOVSKI ROMANIK SAYE, LLC
All Rights Reserved.

SHEET TITLE:

FIRST FLOOR PLAN AND NOTES

SHEET NUMBER:

A-101

3 FIRST FLOOR PLAN
SCALE: 1/8"=1-0"

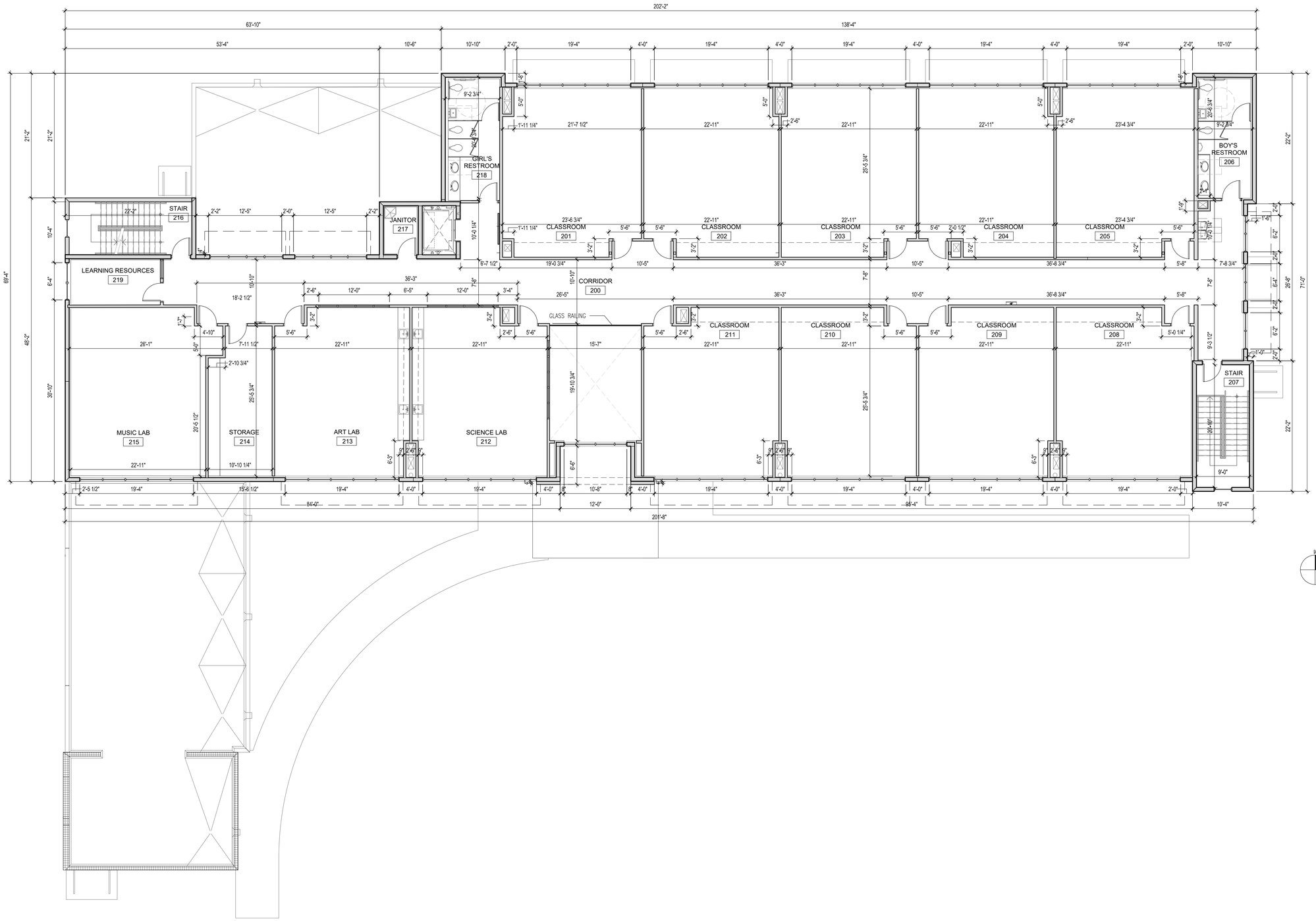

3 SECOND FLOOR PLAN
SCALE: 1/8"=1-0"

SYNALOVSKI ROMANIK SAYE
Architecture • Planning • Interior Design

1800 Eller Drive, Suite 500
Fort Lauderdale, FL 33316

T 954.961.6806
F 954.961.6807

www.synalovski.com

Manuel Synalovski, AIA
AR 0011698
SEAL

LICENSE NO. AA26001863

DAVID POSNACK JEWISH DAY SCHOOL

412 SW 11TH STREET
HALLANDALE BEACH, FL 33009

CLIENT: DPJDS

REV	DATE	DESCRIPTION

DESIGN DELIVERABLE: DRC SUBMITTAL
ISSUE DATE: 03/01/18

PROJECT NUMBER: 1415-160815
DRAWN BY: JS
CHECKED BY: MS

Copyright (c) by SYNALOVSKI ROMANIK SAYE, LLC
All Rights Reserved.

SHEET TITLE:
SECOND FLOOR PLAN AND NOTES

SHEET NUMBER:
A-102

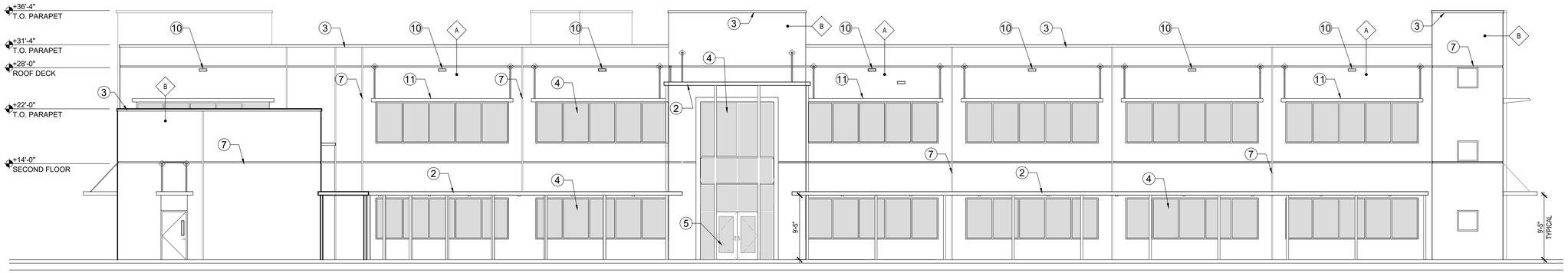

1 SOUTH ELEVATION
SCALE: 1/8"=1-0"

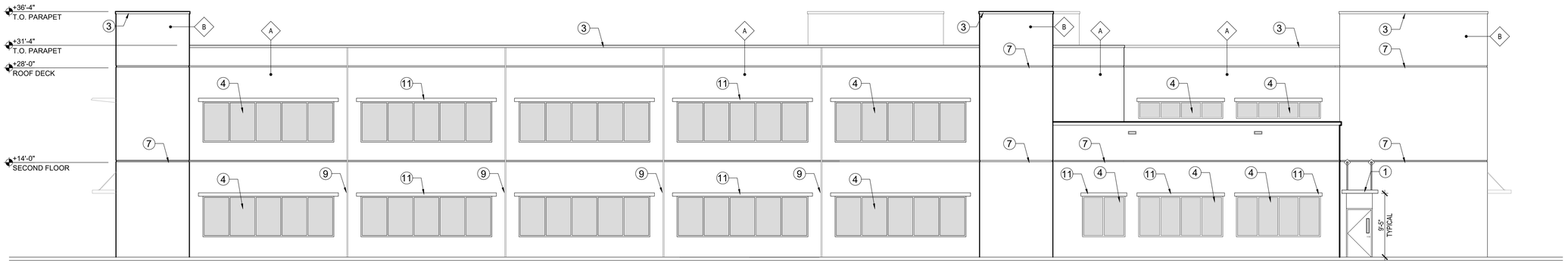

2 NORTH ELEVATION
SCALE: 1/8"=1-0"

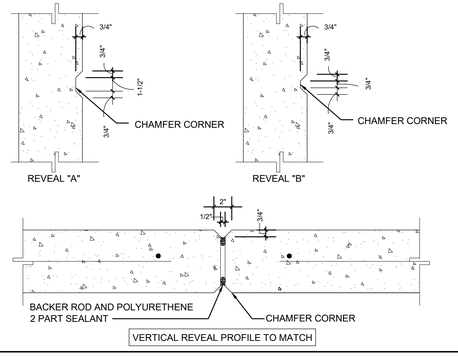

6 WALL PANEL REVEAL& PANEL JOINT DETAILS

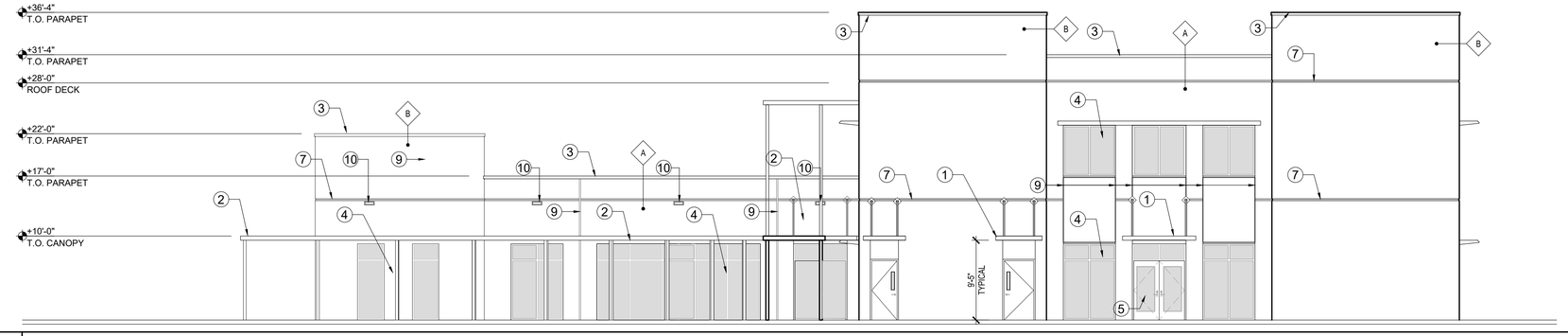

3 EAST ELEVATION
SCALE: 1/8"=1-0"

NOTE:
PAINT COLOR BASIS OF DESIGN BASED ON "SHERWIN WILLIAMS"

- A = PAINT COLOR: SW 6077 "EVERYDAY WHITE" (WHITE)
- B = PAINT COLOR: SW CUSTOM MATCH BEHR "VERY NAVY M500-7" (BLUE)

1. WALL SUPPORTED ALUMINUM CANOPY. G.C. TO SUBMIT SHOP DRAWINGS FOR APPROVAL PRIOR TO MANUFACTURING AND INSTALLATION.
2. ALUMINUM COVER WALKWAY. SILVER PRE-FINISHED POWDER COAT. G.C. TO SUBMIT SHOP DRAWINGS FOR APPROVAL PRIOR TO MANUFACTURING AND INSTALLATION.
3. APPLIED DECORATIVE POLYSTYRENE BANDING AND WALL CAP. PAINTED. BY FOAM FACTORY, INC. OR EQUAL. FINAL SELECTION TO BE COORDINATED WITH ARCHITECT.
4. FIXED MISSILE IMPACT WINDOWS WITH GREEN TINTED GLAZING AND FACTORY PAINT FINISH FRAMES. COLOR: SILVER
5. STOREFRONT DOORS WITH GREEN TINTED GLAZING AND FACTORY PAINT FINISH FRAMES. COLOR: SILVER
6. PAINTED HOLLOW METAL DOOR AND FRAME. LARGE MISSILE IMPACT RESISTANT SYSTEM.
7. HORIZONTAL SCORE-LINE. REFER TO REVEAL A ON DETAIL 6/A-201 FOR MORE INFORMATION
8. BUILDING SIGNAGE AND/ OR LOGO AS PER CITY ZONING AND LAND DEVELOPMENT CODE DIVISION 17. SIGNS.
9. VERTICAL SCORE-LINE. REFER TO REVEAL B ON DETAIL 6/A-201 FOR MORE INFORMATION.
10. OVERFLOW SCUPPERS.
11. ALUMINUM EYEBROW.

5 LEGEND

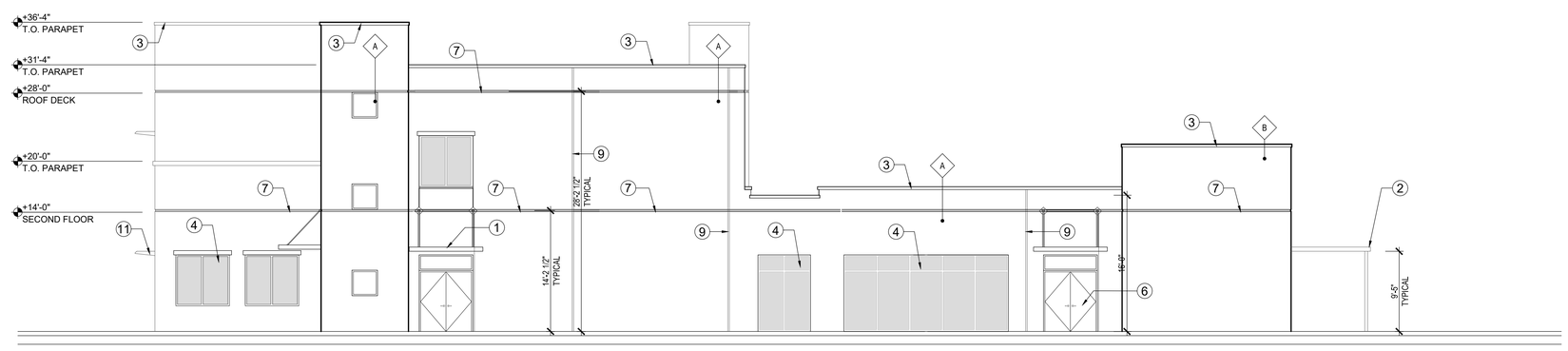

4 WEST ELEVATION
SCALE: 1/8"=1-0"

SYNALOVSKI ROMANIK SAYE
Architecture • Planning • Interior Design

1800 Eller Drive, Suite 500
Fort Lauderdale, FL 33316

T 954.961.6806
F 954.961.6807

www.synalovski.com

Manuel Synalovski, AIA
AR 0011628
SEAL

LICENSE NO. AA26001863

DAVID POSNACK JEWISH DAY SCHOOL

412 SW 11TH STREET
HALLANDALE BEACH, FL 33009

CLIENT: DPJDS

REV	DATE	DESCRIPTION
1	04/04/18	DRC COMMENTS

DESIGN DELIVERABLE: DRC SUBMITTAL
ISSUE DATE: 03/01/18

PROJECT NUMBER: 1415-160815
DRAWN BY: FC
CHECKED BY: JS

Copyright (c) by SYNALOVSKI ROMANIK SAYE, LLC
All Rights Reserved.

SHEET TITLE:
BUILDING ELEVATIONS

SHEET NUMBER:
A-201

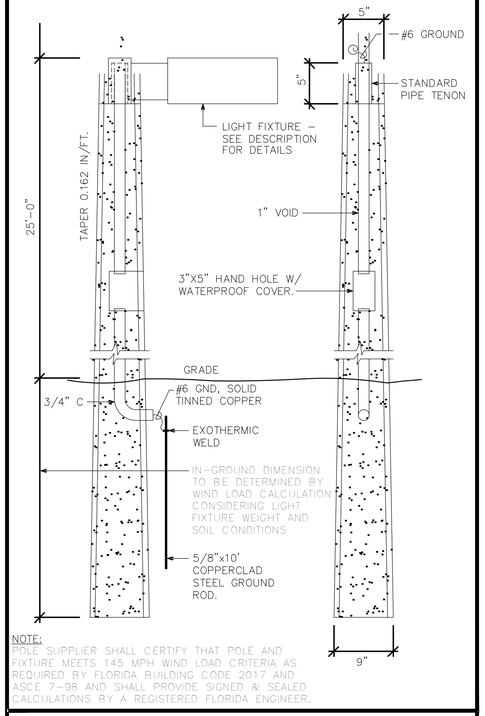

NOTE:
POLE SUPPLIER SHALL CERTIFY THAT POLE AND FIXTURE MEETS 145 MPH WIND LOAD CRITERIA AS REQUIRED BY FLORIDA BUILDING CODE 2017 AND ASCE 7-98 AND SHALL PROVIDE SIGNED & SEALED CALCULATIONS BY A REGISTERED FLORIDA ENGINEER.

TYPE 'SA' CONCRETE POLE DETAIL
NOT TO SCALE

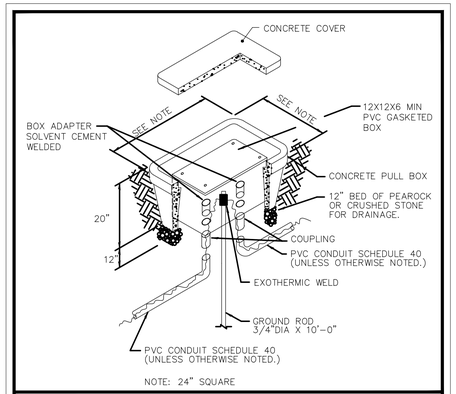

NOTE: 24" SQUARE

TYPICAL HANDHOLE DETAIL
NOT TO SCALE

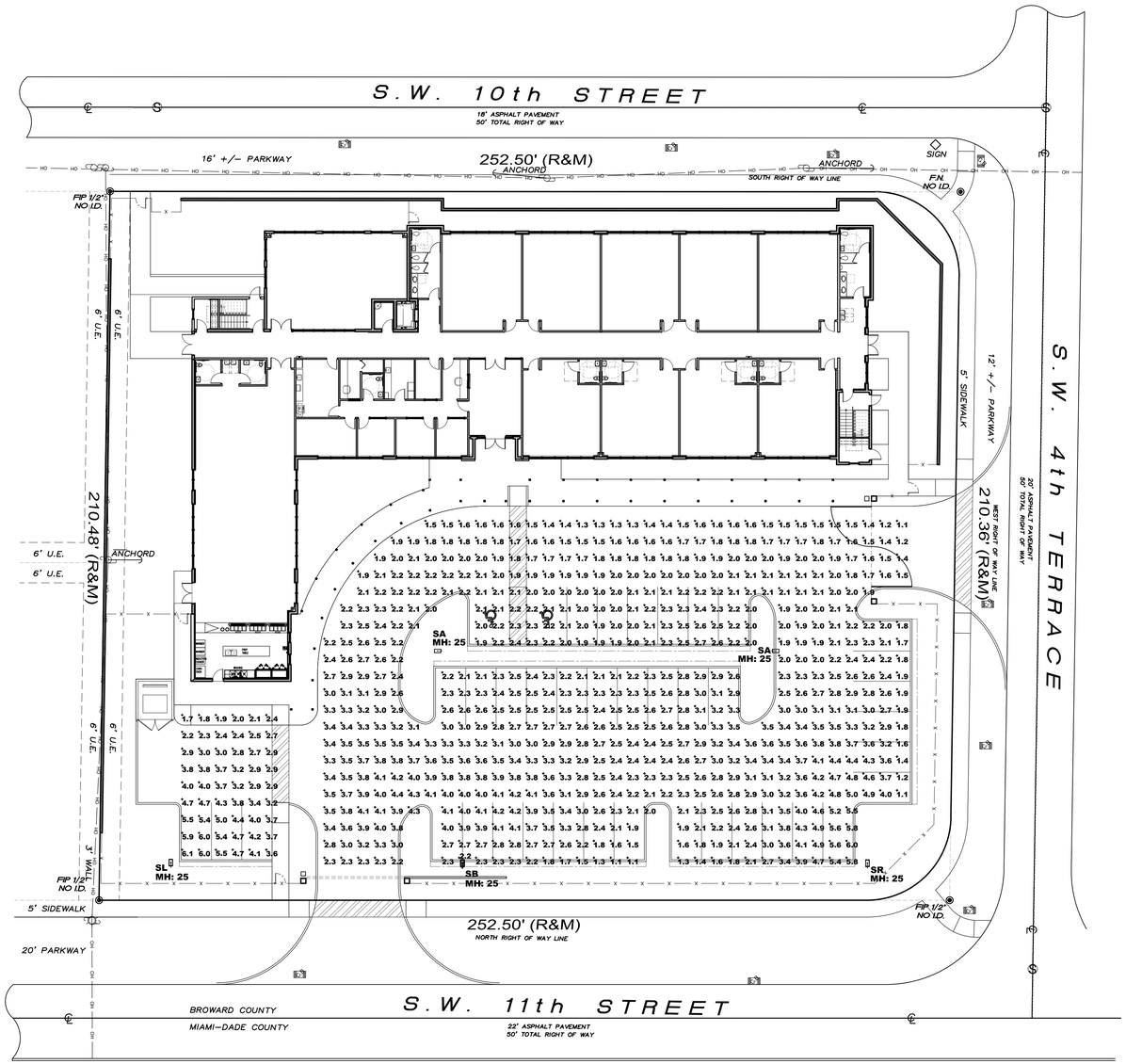

Luminaire Schedule

Project: SW 11TH STREET SCHOOL - SITE_REV 2 HALLANDALE, FL 12/13/2016

Symbol	Qty	Label	Arrangement	Manufacturer	Description	Lum. Lumens	LLF	Lum. Watts
	2	SA	SINGLE	Lithonia Lighting	DSX1 LED 60C 1000 50K T5M MVOLT MH: 25' POLE MOUNT A.F.G.	23461	0.855	209
	1	SB	SINGLE	Lithonia Lighting	DSX1 LED 40C 1000 50K BLC MVOLT MH: 25' POLE MOUNT A.F.G.	11361	0.855	138
	1	SL	SINGLE	Lithonia Lighting	DSX1 LED 60C 700 50K LCCO MVOLT MH: 25' POLE MOUNT A.F.G.	12314	0.855	131
	1	SR	SINGLE	Lithonia Lighting	DSX1 LED 40C 1000 40K RCCO MVOLT MH: 25' POLE MOUNT A.F.G.	10973	0.855	138

Calculation Summary

Project: SW 11TH STREET SCHOOL - SITE_REV 2 HALLANDALE, FL 12/13/2016

Label	CalcType	Units	Avg	Max	Min	Avg/Min	Max/Min
PARKING LOT & DROP OFF AREA	Illuminance	Fc	2.61	6.0	1.1	2.37	5.45
SIDE PARKING LOT	Illuminance	Fc	3.64	6.1	1.7	2.14	3.59

1 PHOTOMETRIC SITE PLAN
SCALE: 1" = 20'

SYNALOVSKI ROMANIK SAYE
Architecture • Planning • Interior Design
1800 Eller Drive, Suite 500
Fort Lauderdale, FL 33316
T 954.961.6806
F 954.961.6807
www.synalovski.com
Manuel Synalovski, AIA
AR 0011628
SEAL
LICENSE NO. AA26001863

DAVID POSNACK JEWISH DAY SCHOOL

412 SW 11TH STREET
HALLANDALE BEACH, FL 33009

CLIENT: DPJDS

REV	DATE	DESCRIPTION
1	04/04/18	DRC COMMENTS

DESIGN DELIVERABLE: DRC SUBMITTAL
ISSUE DATE: 03/01/18

PROJECT NUMBER: 1415-160815
DRAWN BY: JS
CHECKED BY: MS

Copyright (c) by SYNALOVSKI ROMANIK SAYE, LLC
All Rights Reserved.

SHEET TITLE:
PHOTOMETRIC SITE PLAN

SHEET NUMBER:
PH-101

E:\1509-171138 DPJDS Hallandale\Drawings\Phase Submittals\DW\DRC\PH-101.dwg 5/9/2018 5:17:15 PM

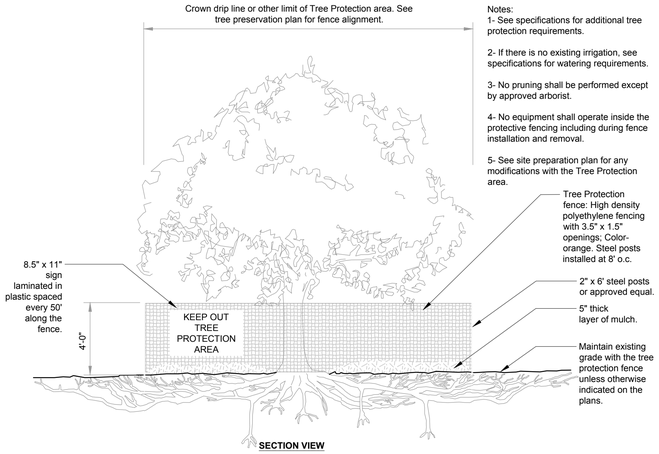

Notes:
1- See specifications for additional tree protection requirements.

2- If there is no existing irrigation, see specifications for watering requirements.

3- No pruning shall be performed except by approved arborist.

4- No equipment shall operate inside the protective fencing including during fence installation and removal.

5- See site preparation plan for any modifications with the Tree Protection area.

1 TREE PROTECTION

1/4" = 1'-0"

URBAN TREE FOUNDATION © 2014
OPEN SOURCE FREE TO USE

FX-PL-FX-TRMT-02

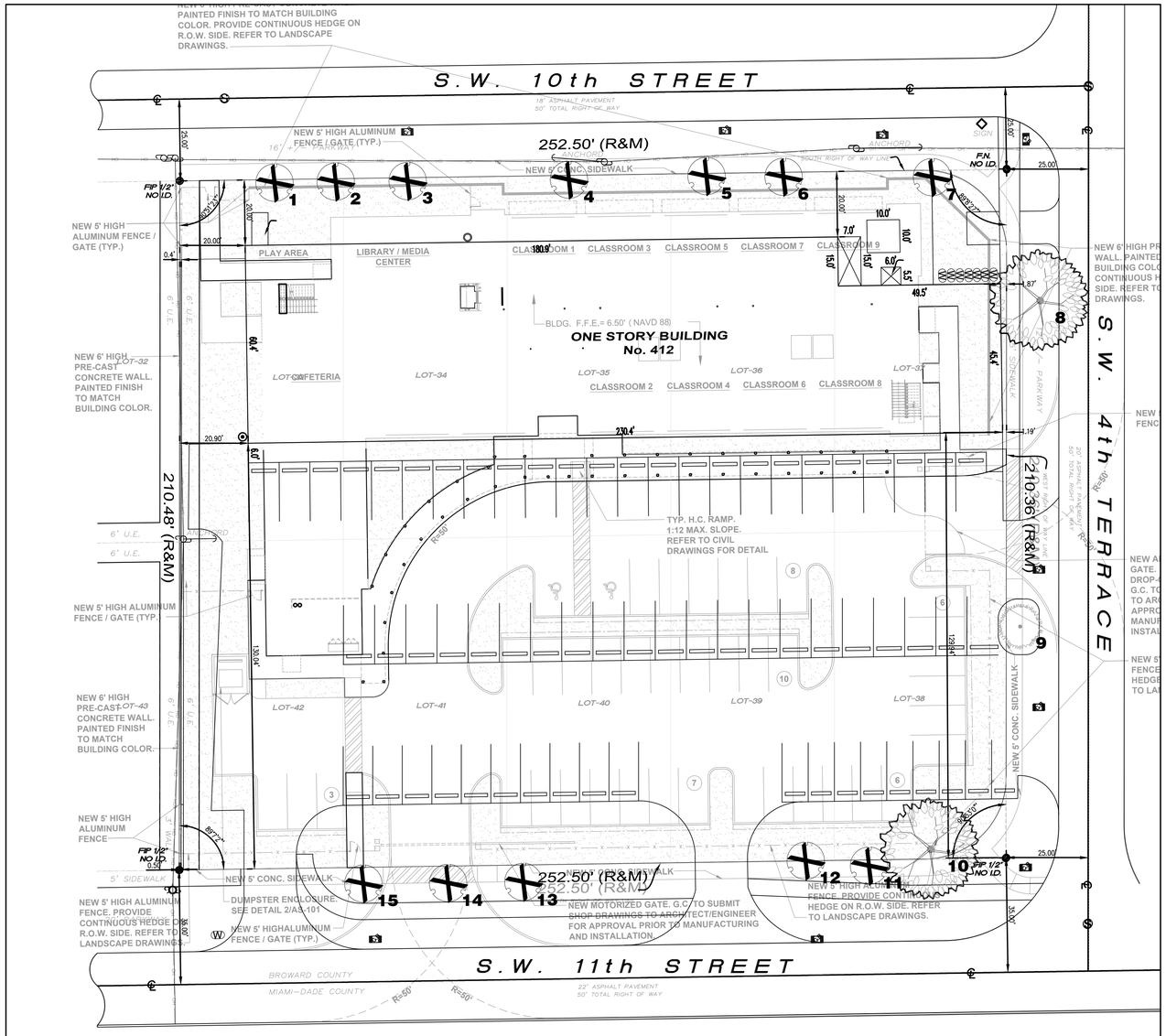

EXISTING SURVEY WITH PROPOSED OVERLAY - TREE CONFLICT

EXISTING TREE INVENTORY

#	Name	*Botanical*	Caliper "	Size	Condition	Reason for Removal
1	Black Olive	*Bucida Buceras*	18	30' x 20'	Poor	Utility conflict
2	Black Olive	*Bucida Buceras*	8	10' x 6'	Poor	Utility conflict
3	Black Olive	*Bucida Buceras*	18	30' x 20'	Poor	Utility conflict
4	Black Olive	*Bucida Buceras*	18	30' x 20'	Poor	Utility conflict
5	Black Olive	*Bucida Buceras*	18	30' x 20'	Poor	Utility conflict
6	Black Olive	*Bucida Buceras*	18	30' x 20'	Poor	Utility conflict
7	Black Olive	*Bucida Buceras*	24	40' x 30'	Poor	Utility conflict
8	Mahogony	*Sweitenia mahogoni*	14	20' X 20'	Good	**PROTECT IN PLACE**
9	Sabal Palm	*Sabal palmetto*	12	10' CT x 10'	Good	**PROTECT IN PLACE**
10	Mahogony	*Sweitenia mahogoni*	14	20' x 20'	Good	**PROTECT IN PLACE**
11	Norfolk Island Pine	*Araucaria heterophylla*	12	**INVASIVE**	**INVASIVE**	**INVASIVE**
12	Mahogony	*Sweitenia mahogoni*	20	30' x 20'	Fair	Proposed Site Hardscape conflict
13	Black Olive	*Bucida Buceras*	20	30' x 20'	Poor	Proposed Site Hardscape conflict
14	Black Olive	*Bucida Buceras*	20	30' x 20'	Poor	Proposed Site Hardscape conflict
15	Black Olive	*Bucida Buceras*	20	30' x 20'	Poor	Proposed Site Hardscape conflict

Tree replacement requirements for nonspecimen trees.
(1)
If the city determines that a removed tree cannot be successfully relocated, the tree shall be replaced to compensate for lost canopy coverage.
(2)
The following criteria shall be used by the city to determine the tree replacement requirements:
a.
The tree canopy coverage of a site shall be determined using any combination of the following methods:
1.
Review of aerial photography.
2.
On-site inspection.
3.
Review of tree survey.
b.
A tree that is successfully relocated pursuant to subsection (1) of this section need not be replaced.
c.
Native trees must be planted to replace native tree canopy coverage removed.
d.
The number required of replacement trees shall be based upon the size of area of impact and the species of replacement trees selected by the applicant. The canopy of the replacement trees at maturity shall at least equal the canopy removed.

SYNALOVSKI ROMANIK SAYE
Architecture Planning Interior Design
1800 Eller Drive, Suite 500
Fort Lauderdale, FL 33316
T 954.961.6806
F 954.961.6807
www.synalovski.com

B·RLA
888 s andrews avenue, suite 300
Fort Lauderdale FL. 33316
office: 954.667.7814
LA# 6666983

REGISTERED LANDSCAPE ARCHITECT
NATALIA B. BARRAND
LA 6666983
STATE OF FLORIDA

DAVID POSNACK JEWISH DAY SCHOOL

412 SW 11TH STREET
HALLANDALE BEACH, FL 33009

CLIENT: DPJDS

REV	DATE	DESCRIPTION

DESIGN DELIVERABLE: **PERMIT SUBMITTAL**
ISSUE DATE: **03/13/17**

PROJECT NUMBER: **1415-160815**
DRAWN BY:
CHECKED BY:

Copyright (c) by SYNALOVSKI ROMANIK SAYE, LLC
All Rights Reserved.

SHEET TITLE:
TREE DISPOSITION PLAN

SHEET NUMBER:
L-1.0

Know what's **below.**
Call before you dig.
www.callsunshine.com

TREES SHALL BE FLORIDA #1 OR BETTER.

GROUND COVER SHALL BE PLANTED AS TO PRESENT A FINISHED APPEARANCE WITH A MINIMUM OF 50% COVERAGE AT TIME OF PLANTING.

NO CYPRESS MULCH SHALL BE ACCEPTED.

ALL PLANTING BEDS SHALL HAVE A MIN. OF 3" OF MULCH AS PER WATERWISE RECOMMENDATIONS.

ROOT BARRIERS TO BE PROVIDED 20 LINEAR FEET PER SHADE TREE ALONG SIDEWALKS.

1 HEDGES SHALL BE MAINTAINED AT 30" FOR VISIBILITY INTO PROPERTY.

CALCULATIONS

	A	B	C
1	**Landscape Area Requirements**		
2	**Site**	**52856**	**sqft**
3		**REQUIRED**	**PROVIDED**
4	15% LANDSCAPE	7,928	15,222
5			
6	1 TREE PER 1500 SQFT	36	46 (48 with palms)
7	TREE DIVERSITY 21-50 TREES	4	8
8	Drought tolerant trees	50%	100%
9	Native trees	50%	100%
10	Turf max 70% swale not included	11375.7 sf	4,731 sf
11	hedge- drought	30%	100%
12	Off site trees		25 (2 existing)
13	Mitigation	TBD by City	
14		**57 total trees**	**73 total trees**

1

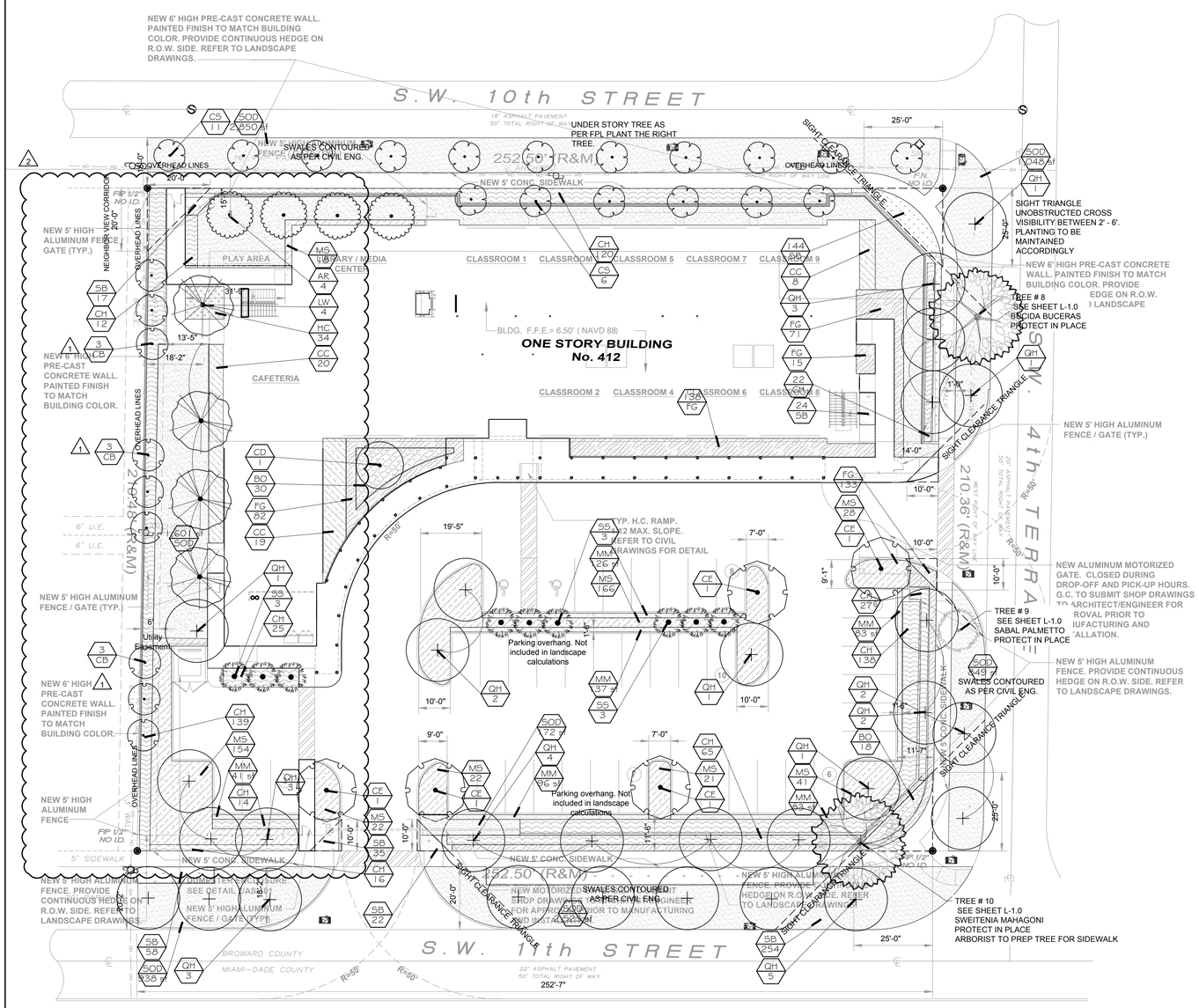

PLANT SCHEDULE ONSITE

TREES	QTY	BOTANICAL NAME / COMMON NAME	CONT	DBH	PLANTED SIZE	MATURE SIZE	DROUGHT	NATIVE
AR	4	Acer rubrum / Red Maple	FG	3.5"-4" cal	15' STD	50' x 25'	HIGH	NATIVE
CD	1	Coccoloba diversifolia / Pigeon Plum	FG	3"Cal	15' STD	40' x 20'	HIGH	NATIVE
CE	5	Conocarpus erectus / Green Buttonwood	FG	3"Cal	15' OA	40' x 35'	HIGH	NATIVE
CB	9	Conocarpus erectus 'Sericeus' / Silver Buttonwood	FG	3"Cal	12' STD	25' x25'	HIGH	NATIVE
CS	6	Cordia sebestena / Orange Geiger Tree	FG	3"Cal	12' OA	20' X 15'	HIGH	NATIVE
LW	4	Lysiloma latisiliqua / Wild Tamarind	FG	3"Cal	15' OA	40' x 35'	HIGH	NATIVE
QH	17	Quercus virginiana / Live Oak	FG	4"Cal	20' STD	70' x 60'	HIGH	NATIVE
SS	9	Sabal palmetto / Cabbage Palmetto	FG		12' CT	40' x 15'	HIGH	NATIVE

SHRUB AREAS	QTY	BOTANICAL NAME / COMMON NAME	CONT	CONT. HGT X W	NOTE	MATURE HGT X W	DROUGHT	NATIVE	SPACING
BO	48	Begonia odorata 'Alba' / Giant White Angel Begonia	1 gal	24"x24"	FULL	4'x4'	MED	FL-FRIENDLY	36" o.c.
CC	47	Chamaedorea cataractarum / Cat Palm	1 gal	4'x4'	FULL	6' x 6'	MED	FL-FRIENDLY	48" o.c.
CH	578	Chrysobalanus icaco 'Horizontalis' / Cocoplum	3 gal	24"x24"	FULL	20' x 20'	MED	NATIVE	30" o.c.
FG	458	Ficus microcarpa 'Green Island' / Green Island Ficus	3 gal	14"x14"	FULL	Maintained 36" or less	HIGH	FL-FRIENDLY	24" o.c.
HC	34	Hymenocallis caribaea / Spider Lily	3gal	14"x14"	FULL	3'	HIGH	NATIVE	24" o.c.
MS	472	Microsorum scolopendrum / Wart Fern	3gal	18" x 18" FULL	FULL	3' x 3'	MED	NATIVE	30" o.c.
SB	242	Spartina bakeri / Sand Cord Grass	1 gal	12" x 12"	FULL	24 x 24"	HIGH	NATIVE	18" o.c.

GROUND COVERS	QTY	BOTANICAL NAME / COMMON NAME	CONT	HGT X W	NOTE	MATURE	DROUGHT	NATIVE	SPACING
MM	564 sf	MULCH M Melaleuca / MULCH-Melaleuca	flat						
SOD	4,213 sf	Stenotaphrum secundatum / St. Augustine Grass	flat						

PLANT SCHEDULE OFFSITE

TREES	QTY	BOTANICAL NAME / COMMON NAME	CONT	DBH	PLANTED SIZE	MATURE SIZE	DROUGHT	NATIVE
CS	11	Cordia sebestena / Orange Geiger Tree	FG	3"Cal	12' OA 1	20' X 15'	HIGH	NATIVE
QH	12	Quercus virginiana / Live Oak	FG	4"Cal	20' STD	70' x 60'	HIGH	NATIVE

SHRUB AREAS	QTY	BOTANICAL NAME / COMMON NAME	CONT	CONT. HGT X W	NOTE	MATURE HGT X W	DROUGHT	NATIVE	SPACING
SB	312	Spartina bakeri / Sand Cord Grass	1 gal	12" x 12"	FULL	24 x 24"	HIGH	NATIVE	18" o.c.

GROUND COVERS	QTY	BOTANICAL NAME / COMMON NAME	CONT	HGT X W	NOTE	MATURE	DROUGHT	NATIVE	SPACING
SOD	8,209 sf	Stenotaphrum secundatum / St. Augustine Grass	flat						

0 20 40 60 feet
SCALE: 1" = 20'

NORTH

SYNALOVSKI ROMANIK SAYE
Architecture Planning Interior Design
1800 Eller Drive, Suite 500
Fort Lauderdale, FL 33316
T 954.961.6806
F 954.961.6807
www.synalovski.com

B·RLA
888 s andrews avenue, suite 300
Fort Lauderdale FL. 33316
office: 954 667.7814
LAR 6666983

REGISTERED LANDSCAPE ARCHITECT
NATALIA B. BARRAND
LA 6666983
STATE OF FLORIDA

DAVID POSNACK JEWISH DAY SCHOOL

412 SW 11TH STREET
HALLANDALE BEACH, FL 33009

CLIENT: DPJDS

REV	DATE	DESCRIPTION
1	4/4/2018	CITY COMMENTS
2	5/8/2018	SITE MODIFICATION

DESIGN DELIVERABLE: **PERMIT SUBMITTAL**
ISSUE DATE: **03/13/17**

PROJECT NUMBER: **1415-160815**
DRAWN BY:
CHECKED BY:

Copyright (c) by SYNALOVSKI ROMANIK SAYE, LLC
All Rights Reserved.

SHEET TITLE:

PROPOSED LANDSCAPE PLAN

SHEET NUMBER:
L-2.0

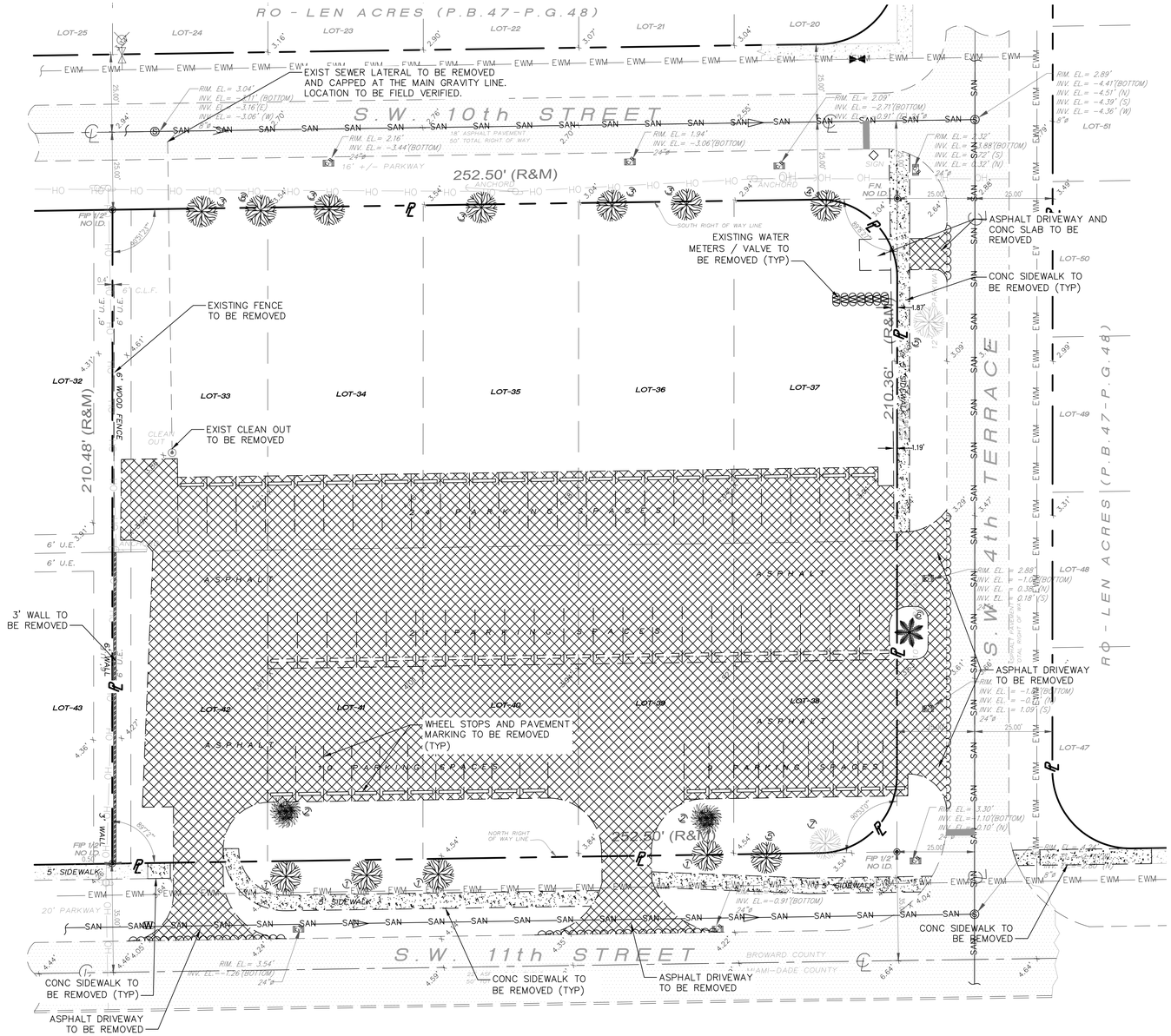

LEGEND

- PROPERTY LINE
- CENTER LINE OF ROAD
- EXISTING WATER METER
- 0.00 DENOTES N.G.V.D. 29 IN FEET
- EXIST ASPHALT PAVEMENT
- EXIST CONC SIDEWALK/SLAB TO BE REMOVED
- EXIST ASPHALT TO BE REMOVED
- EWM — EWM EXISTING WATER MAIN
- SAN — SAN SANITARY SEWER MAIN
- OH — OH OVERHEAD UTILITY
- SAW CUT LINE

LOCATION MAP
NTS

NOTES

1. CONTRACTOR TO LOCATE AND REMOVE EXISTING SEWER LATERAL. CAP THE SEWER LATERAL AT THE MAIN GRAVITY LINE.
2. REFER TO LANDSCAPE DRAWINGS FOR TREET TO BE REMOVED.

SUBMITTED FOR APPROVAL
03-01-2018

FOR BLDG DEPT PERMIT

NO.	REVISION	DATE

DAVID POSNACK JEWISH DAY SCHOOL
412 SW 11TH STREET, HALLANDALE BEACH, FL 33009
FOR: DP JDS

CORDOVA RODRIGUEZ & ASSOCIATES, INC.
ENGINEERS - PLANNERS
AUTHORIZATION NO. 8459
CORDOVA RODRIGUEZ & ASSOCIATES, INC.
6961 SW 196TH AVENUE, SUITE 28
PEMBROKE PINES, FLORIDA 33332
TEL: (954) 880-0180
FAX: (954) 880-0181
WWW.CRAENGINEERING.COM

ROSANA D. CORDOVA, P.E.
LICENSED ENGINEER
FL LICENSED P.E. No. 41864
DATE:

LUIS E. RODRIGUEZ, P.E.
LICENSED ENGINEER
FL LICENSED P.E. No. 54287
DATE:

DEMOLITION PLAN

DESIGN: LER	CHECKED: RDC
SCALE: 1 " = 20'	
DATE: 03-01-2018	
PROJECT NO. 16-199.01	
SHT 01 OF 10	
DWG NO. C-101	

C-101

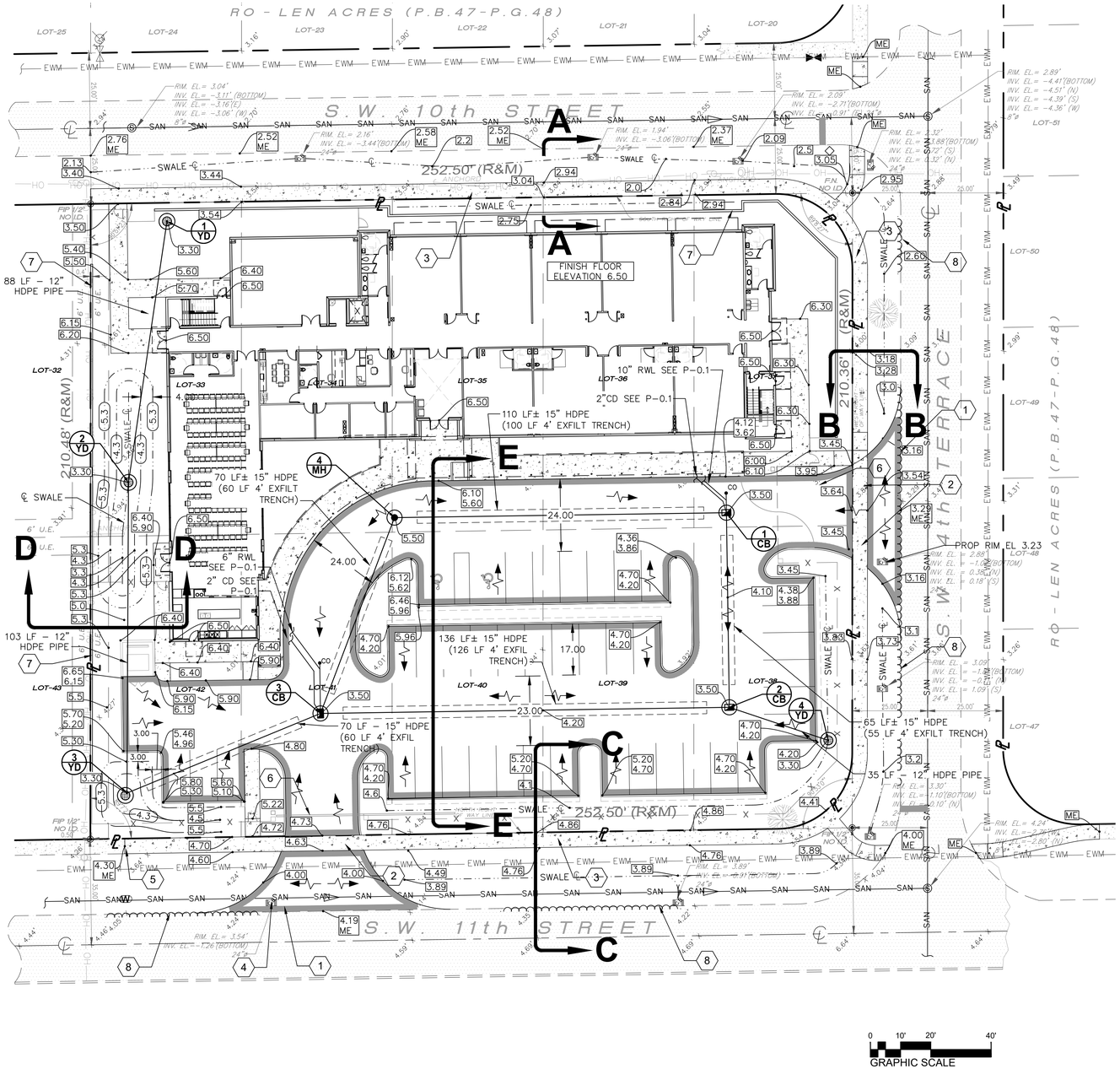

LEGEND

- PROPERTY LINE
- CENTER LINE OF ROAD
- EXISTING WATER METER
- 0.00 PROP ELEVATION (NAVD88)
- 0.00 EXIST ELEVATION
- EXIST ASPHALT PAVEMENT
- CONCRETE SIDEWALK
- PROP PAVEMENT
- FLOW ARROW
- PROP CB WITH EXFILTRATION TRENCH
- YARD DRAIN
- STORM MANHOLE
- EWM — EWM EXISTING WATER MAIN
- SAN — SAN SANITARY SEWER MAIN
- OH — OH OVERHEAD UTILITY
- SAW CUT LINE
- SWALE CENTER LINE
- X PROPOSED FENCE

LOCATION MAP

NTS

LEGAL DESCRIPTION

LOTS 33 THROUGH 42, BOTH INCLUDED, OF RO-LEN ACRES, ACCORDING TO THE PLAT THEREOF, AS RECORDED IN PLAT BOOK 47, AT PAGE 48, OF THE PUBLIC RECORDS OF BROWARD COUNTY, FLORIDA.

PAVING, GRADING AND DRAINAGE NOTES:

1. THE LOCATION, SIZE, AND MATERIAL OF EXISTING UTILITIES HAVE BEEN DETERMINED FROM AVAILABLE RECORDS. THE OWNER AND THE ENGINEER DO NOT GUARANTEE THE ACCURACY OF THIS DATA. IT SHALL BE THE CONTRACTOR'S RESPONSIBILITY TO LOCATE AND PROTECT ALL THE EXISTING UTILITIES AND STRUCTURES ENCOUNTERED DURING CONSTRUCTION.
2. CONTRACTOR SHALL VERIFY PROPER CLEARANCE BELOW EXISTING OVERHEAD POWER LINES PRIOR TO WORKING WITHIN THE VICINITY OF THE POWER LINES.
3. ANY DISCREPANCY BETWEEN THIS PLAN AND THE ACTUAL FIELD CONDITIONS SHALL BE BROUGHT TO THE ATTENTION OF THE ENGINEER PRIOR TO COMMENCING ANY CONSTRUCTION WORK.
4. ALL EXISTING AND NEW COVER, FRAMES, GRATES, ETC.. SHALL BE ADJUSTED TO MATCH FLUSH WITH NEW GRADES OF PAVEMENT OR CONCRETE SIDEWALKS.
5. MAINTAIN THE EXISTING UTILITY SERVICES AT ALL TIMES.
6. NEW PAVEMENT / PAVERS TO MEET AND MATCH WITH EXISTING IN A NEAT STRAIGHT LINE. CONTRACTOR TO ROUND AND ADJUST SLOPES AS REQUIRED IN FIELD TO AVOID BUMPS, CAREFULLY GRADE AREA TO DRAIN.
7. CONTRACTOR TO RESTORE ANY EXISTING CONCRETE SIDEWALK, ASPHALT PAVEMENT, LANDSCAPE, ETC. DISTURBED DURING THE CONSTRUCTION.
8. COORDINATE PAVING, GRADING AND DRAINAGE WORK WITH OTHER UTILITIES IN THIS PROJECT.
9. ALL WORK SHALL BE DONE IN STRICT ACCORDANCE WITH SPECIFICATION AND STANDARD REQUIREMENTS OF CITY OF HALLANDALE BEACH, FLORIDA DEPARTMENT OF ENVIRONMENTAL PROTECTIONS (FDEP), FLORIDA DEPARTMENT OF TRANSPORTATION STANDARDS AND ALL OTHER LOCAL & NATIONAL CODES AS APPLICABLE.
10. ALL ELEVATIONS ARE RELATIVE TO THE NATIONAL VERTICAL DATUM (N.A.V.D.) 1988. CONVERSION FACTOR = 1.51
11. PROPOSED CONCRETE / PAVER DRIVEWAY AND IMPROVEMENTS IN THE RIGHT OF WAY TO BE IN ACCORDANCE TO CITY OF HALLANDALE BEACH STANDARD REQUIREMENTS.
12. COORDINATE WITH MEP / IRRIGATION PLANS REGARDING WATER & SEWER SERVICE TO THE BUILDING.
13. FOR PROPOSED SANITARY SEWER LATERAL AND WATER SERVICES SEE SHEET 1619901-C-301-WS.
14. PROP CONCRETE SIDEWALK ACROSS DRIVEWAYS (2) SHALL BE 6 INCH THICK.

DRAINAGE STRUCTURES TABLE

STRUCT	RIM EL	INV EL	TYPE	PRB
CB1	3.50	0.49 (S)(W)	5' DIA	S,W
		0.50 (NW) 10"	–	–
		1.00 (SW) 2"	–	–
CB2	3.50	0.49 (N)(W)(SE)	4' DIA	N,W,SE
CB3	3.50	0.49 (E)(NE)(SW)	5' DIA	E,NE,SW
		1.00 (NW) 6"	–	–
		0.50 (NW) 2"	–	–
MH4	5.50	0.49 (SW)(E)	4' DIA	–
YD1	3.30	0.50 (S)	2' DIA	S
YD2	3.30	0.50 (N)	2' DIA	N
YD3	3.30	0.50 (NE)	2' DIA	NE
YD4	3.30	0.50 (NW)	2' DIA	NW

KEY NOTES

1. SAW CUT AND CONNECT TO EXISTING PAVEMENT PER CITY OF HALLANDALE BEACH ENGINEERING STANDARDS.
2. PROPOSED CONCRETE SIDEWALK ACROSS DRIVEWAY (6" THICK) SEE NOTE 14
3. PROP 5' CONCRETE SIDEWALK WITH 2% CROSS SLOPE MAX.
4. EXIST CB RIM TO BE ADJUSTED AS REQUIRED.
5. CONNECT TO EXIST SIDEWALK. MATCH EXIST ELEVATIONS.
6. PROP ENTRANCE GATE
7. PROP PERIMETER WALL. SEE ARCHITECTURAL/ STRUCTURAL DWGS FOR MORE DETAILS.
8. SAW CUT PAVEMENT & REMOVED ASPHALT. SEE DEMOLITION PLANS

SUBMITTED FOR APPROVAL
03-01-2018

FOR BLDG DEPT PERMIT

NO.	REVISION	DATE

DAVID POSNACK JEWISH DAY SCHOOL

412 SW 11TH STREET, HALLANDALE BEACH, FL 33009
FOR: DP JDS

CORDOVA RODRIGUEZ & ASSOCIATES, INC.
ENGINEERS · PLANNERS
AUTHORIZATION No. 8459
CORDOVA RODRIGUEZ & ASSOCIATES, INC.
6941 SW 196TH AVENUE, SUITE 28
PEMBROKE PINES, FLORIDA 33332
TEL: (954) 880-0180
FAX: (954) 880-0188
WWW.CRAENGINEERING.COM

ROSANA D CORDOVA, P.E.
LICENSED ENGINEER
FL LICENSED P.E. No. 41864
DATE:

LUIS E. RODRIGUEZ, P.E.
LICENSED ENGINEER
FL LICENSED P.E. No. 54287
DATE:

DESIGN: LER CHECKED: RDC
SCALE: 1 " = 20'
DATE: 03-01-2018
PROJECT NO. 16-199.01
SHT 02 OF 10
DWG NO. C-201

PAVING, GRADING AND DRAINAGE PLAN

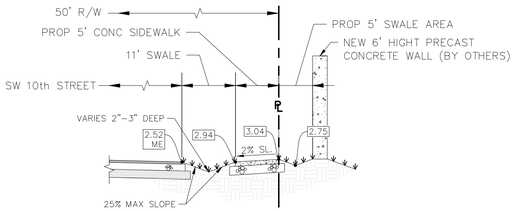

SECTION A-A

NTS

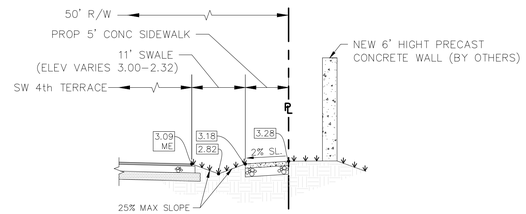

SECTION B-B

NTS

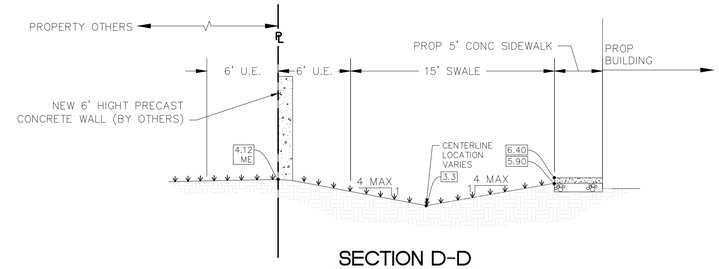

SECTION D-D

NTS

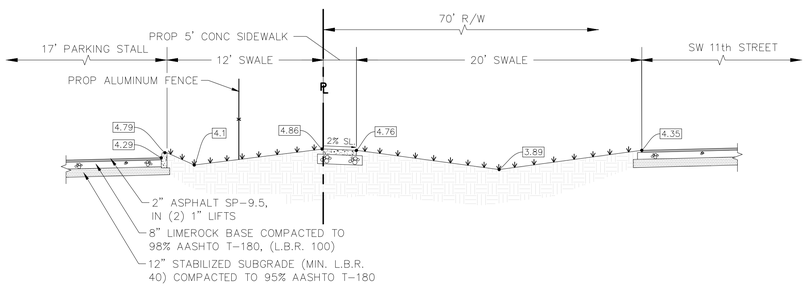

SECTION C-C

NTS

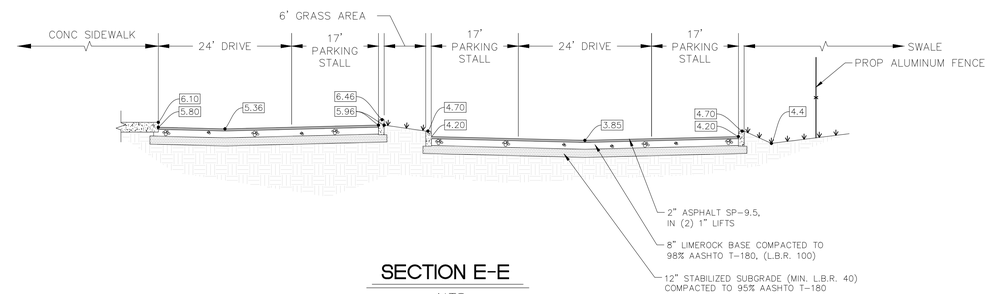

SECTION E-E

NTS

SUBMITTED FOR APPROVAL
03-01-2018

FOR BLDG DEPT PERMIT

NO.	REVISION	DATE

PLOTTED ON 05/01/2018 10:33:41 AM

DAVID POSNACK JEWISH DAY SCHOOL

412 SW 11TH STREET, HALLANDALE BEACH, FL 33009
FOR: DP JDS

SAVED ON 2/28/2018 11:21:54 AM

CORDOVA RODRIGUEZ & ASSOCIATES, INC.
ENGINEERS · PLANNERS
AUTHORIZATION No. 8459
CORDOVA RODRIGUEZ & ASSOCIATES, INC.
6761 SW 196TH AVENUE, SUITE 28
PEMBROKE PINES, FLORIDA 33332
TEL: (954) 880-0180
FAX: (954) 880-0181
WWW.CRAENGINEERING.COM

ROSANA D. CORDOVA, P.E.
LICENSED ENGINEER
FL LICENSED P.E. No. 41864
DATE:

LUIS E. RODRIGUEZ, P.E.
LICENSED ENGINEER
FL LICENSED P.E. No. 54287
DATE:

DESIGN: LER | CHECKED: RDC

SCALE: NTS

DATE: 03-01-2018

PROJECT NO. 16-199.01

SHT 03 OF 10

DWG NO. C-201.1

PAVING, GRADING AND DRAINAGE SECTIONS

C:\16-199.01-Posnack Jewish Day School\C-201.1-P2GD-SECT.dwg

C-201.1

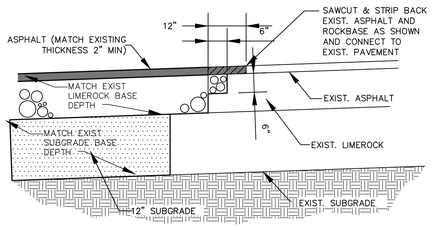

NEW ASPHALT SECTION / CONNECT TO EXISTING PAVEMENT

NTS

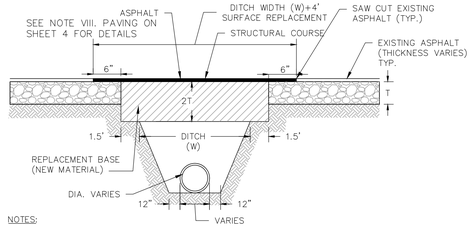

NOTES:

1. BASE MATERIAL OVER DITCH SHALL BE TWICE THE THICKNESS OF THE ORIGINAL.(MINIMUM 14")
2. BASE MATERIAL SHALL BE PLACED IN 6" MAXIMUM LAYERS (LOOSE MEASUREMENT) AND EACH LAYER THOROUGHLY ROLLED OR TAMPED TO 98% OF MAXIMUM DENSITY, PER AASHTO T-180.
3. ASPHALT CONCRETE PAVEMENT JOINTS SHALL BE MECHANICALLY SAW CUT.
4. SURFACE MATERIAL SHALL BE CONSISTENT WITH THE SURROUNDING SURFACE MATERIAL.
5. BASE MATERIAL SHALL HAVE A MINIMUM CARBONATE OF 70% (60% FOR LOCAL STREETS).
6. SUB GRADE MATERIAL SHALL BE GRANULAR AND ANGULAR AND SHALL HAVE A MINIMUM LBR OF 40.
7. IF THE DITCH IS FILLED TEMPORARILY, IT SHALL BE COVERED WITH A 2" THICK ASPHALT CONCRETE PATCH TO KEEP THE FILL MATERIAL FROM RAVELING, UNTIL REPLACED WITH A PERMANENT PATCH.
8. FOR STATE ROADS REFER TO FDOT SPECIFICATIONS AND REQUIREMENTS.
9. STRUCTURAL COURSE TO MATCH EXISTING. (MINIMUM 4")

PAVEMENT RESTORATION

N.T.S.

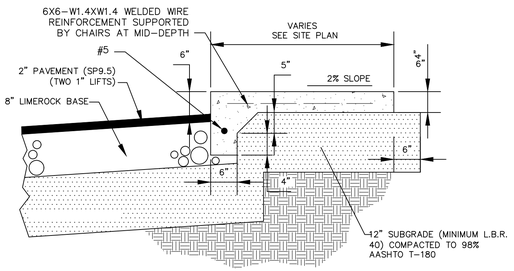

CONCRETE SIDEWALK W/ THICKENED EDGE

N.T.S.

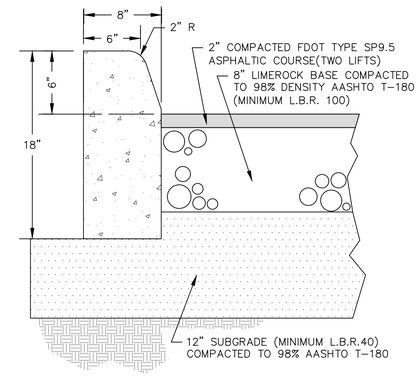

TYPE 'D' CURB

N.T.S.

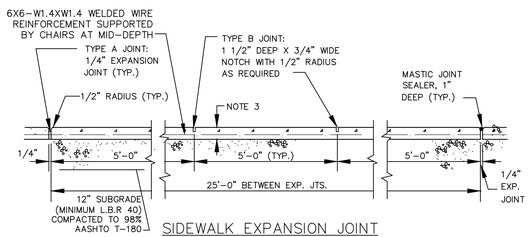

SIDEWALK EXPANSION JOINT LONGITUDINAL SECTION

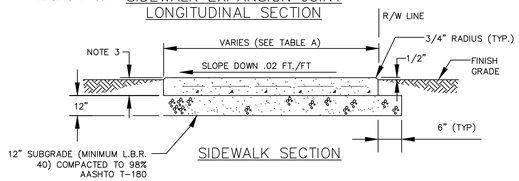

SIDEWALK SECTION

TYPE	SIDEWALK JOINTS
	LOCATION
"A"	PC=POINT OF CURVATURE PT=POINT OF TANGENCY OF CURVES
"B"	5'-0" CENTER TO CENTER ON SIDEWALKS

NOTES:

1. CONCRETE TO BE CLASS 1, 3,000 P.S.I.
2. 4" THICKNESS MIN. (TYP.)
3. SIDEWALK SLOPES SHALL MEET THE REQUIREMENTS OF THE AMERICAN WITH DISABILITIES ACT.
4. CONSTRUCT EXPANSION JOINTS AT SPACINGS SHOWN ABOVE; AT POINT OF CURVATURE; AT ADJOINING STRUCTURES; AND, AT THE END OF DAYS WORK.

TYPICAL SIDEWALK DETAIL

NTS

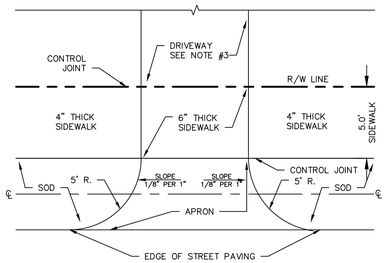

PLAN VIEW

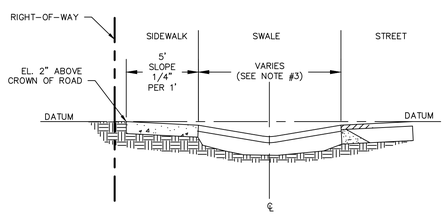

TYPICAL SECTION

SIDEWALKS:

1. SIDEWALKS SHALL BE CONCRETE 4" THICK EXCEPT ACROSS DRIVEWAYS WHERE THEY WILL BE 6" THICK WITH 10X10-W6XW6 ROAD MESH (SEE NOTE #2)

APRONS:

1. APRONS SHALL BE 6" CONCRETE WITH 10X10-W6XW6 WIRE MESH (SEE NOTE #2) OR 6" COMPACTED ROAD WITH 1 1/2" ASPHALT SURFACE.
2. APRONS SHOULD BE SLOPED TO DRAIN TO PERVIOUS SOD AREA AND NOT TO STREET.

GRASS SWALES:

1. UNDER ALL DRIVEWAY PERMITS GRASS SWALE MUST BE GRADED, PER CITY SPECIFICATIONS, AND SODDED (SEE NOTE #1).
2. IF SOD AREA IS DEEMED INSUFFICIENT FOR STORM WATER CRITERIA AND LOCAL CONDITIONS ADDITIONAL SUBSURFACE DRAINAGE SHALL BE PROVIDED (E.G. FRENCH DRAIN).

DRIVEWAYS:

1. MINIMUM OF 4" CONCRETE WITH 10X10-W6XW6 WIRE MESH (SEE NOTE #2) OR 1" ASPHALT OVER COMPACTED ROCK.

NOTES:

1. DEPTH OF APRON IS BASED ON SLOPE OF 1/4" PER FOOT OF WIDTH FROM EDGE OF STREET TO TOP OF DRIVEWAY WHEN ISNTALLED. DELPTH OF GRASS SWALE IS BASED ON SLOPE OF 1/2" FER FOOT OF WIDTH FROM EDGE OG STREET TO TOP OF SOD WHEN INSTALLED.
2. ALL CONCRETE MUST BE 3000 psi WITH CONTROL JOINT 20 FT ON CENTER.
3. DRIVEWAY MUST BE SLOPED TO DRAIN TO PERVIOUS AREA (GRASS) INSIDE PROPERTY AND NOT TO CITY'S RIGHT-OF-WAY

SWALE CONSTRUCTION REQUIREMENTS

NTS

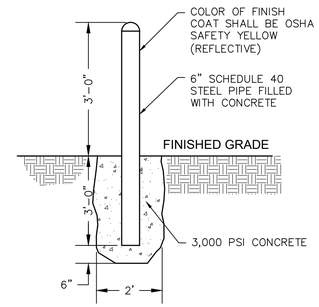

BOLLARD DETAIL

NTS

SUBMITTED FOR APPROVAL
03-01-2018

FOR BLDG DEPT PERMIT

NO.	REVISION	DATE

DAVID POSNACK JEWISH DAY SCHOOL

412 SW 11TH STREET, HALLANDALE BEACH, FL 33009
FOR: DP JDS

CORDOVA RODRIGUEZ & ASSOCIATES, INC.
ENGINEERS · PLANNERS
AUTHORIZATION No. 8659
CORDOVA RODRIGUEZ & ASSOCIATES, INC.
6961 SW 196TH AVENUE, SUITE 29
PEMBROKE PINES, FLORIDA 33332
TEL: (954) 880-0180
FAX: (954) 880-0188
WWW.CRAENGINEERING.COM

ROSANA D. CORDOVA, P.E.
LICENSED ENGINEER
FL LICENSED P.E. No. 41864
DATE:

LUIS E. RODRIGUEZ, P.E.
LICENSED ENGINEER
FL LICENSED P.E. No. 54287
DATE:

DESIGN: LER | CHECKED: RDC

SCALE: NTS

DATE: 03-01-2018

PROJECT NO. 16-199.01

SHT 04 OF 10

DWG NO. C-202

PAVING, GRADING AND DRAINAGE DETAILS 1

SAVED ON 2/27/2018 2:41:33 PM
C:\16-199.01\Files-scan-eng\Misc\16199.01-C-202-PGD-DTL.dwg
C-202

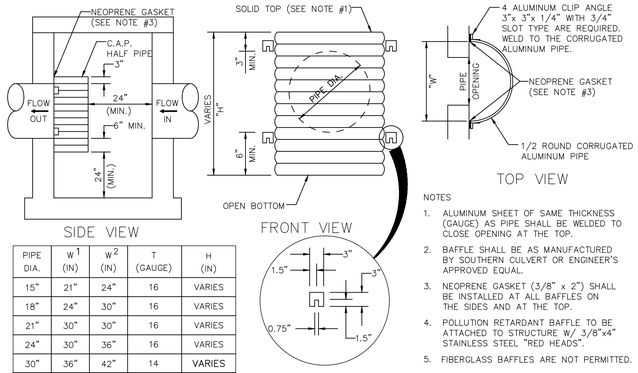

PIPE DIA.	W[1] (IN)	W[2] (IN)	T (GAUGE)	H (IN)
15"	21"	24"	16	VARIES
18"	24"	30"	16	VARIES
21"	30"	30"	16	VARIES
24"	30"	36"	16	VARIES
30"	36"	42"	14	VARIES
36"	42"	48"	14	VARIES
48"	54"	60"	14	VARIES

1. RECTANGULAR STRUCTURE
2. ROUND STRUCTURE

NOTES

1. ALUMINUM SHEET OF SAME THICKNESS (GAUGE) AS PIPE SHALL BE WELDED TO CLOSE OPENING AT THE TOP.
2. BAFFLE SHALL BE AS MANUFACTURED BY SOUTHERN CULVERT OR ENGINEER'S APPROVED EQUAL.
3. NEOPRENE GASKET (3/8" x 2") SHALL BE INSTALLED AT ALL BAFFLES ON THE SIDES AND AT THE TOP.
4. POLLUTION RETARDANT BAFFLE TO BE ATTACHED TO STRUCTURE W/ 3/8"x4" STAINLESS STEEL "RED HEADS".
5. FIBERGLASS BAFFLES ARE NOT PERMITTED.

POLLUTION RETARDANT BAFFLE DETAIL

N.T.S.

INLET NOTES

FOUNDATION MATERIAL: WHERE MATERIAL UNSATISFACTORY FOR FOUNDATION IS ENCOUNTERED, ALL SUCH MATERIAL MUST BE REMOVED DOWN TO SATISFACTORY MATERIAL AND BACKFILLED TO SUBGRADE WITH CLEAN SAND.

GRATES: CAST IRON IN ACCORDANCE WITH F.D.O.T. SPECIFICATIONS.

MATERIAL: INLET WALLS AND BASES MAY BE EITHER CAST-IN-PLACE CLASS I, 2500 P.S.I. CONCRETE OR PRECAST CLASS II, 4000 P.S.I. CONCRETE.

POLLUTION CONTROL DEVICES: "DRAINAGE CONTROL STRUCTURES" SHALL HAVE A POLLUTION RETARDANT BAFFLE INSTALLED, CONSISTING OF HALF-ROUND CORRUGATED ALUMINUM PIPE, OPEN AT THE BOTTOM, WELDED CLOSED AT TOP.

BACKFILL NOTES

COMPACT TRENCH BACKFILL AND SOIL WITHIN MIN. 5' OF TRENCH TO MIN. 95% OF MAX. DRY DENSITY PER ASTM D-1557.

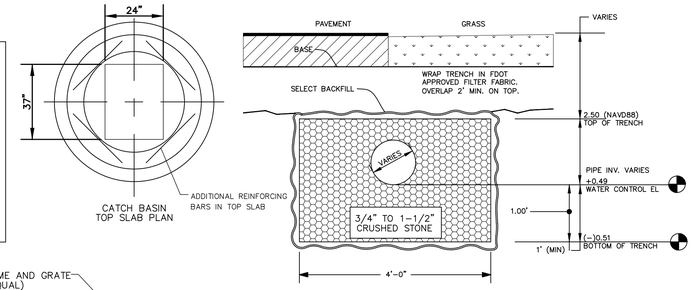

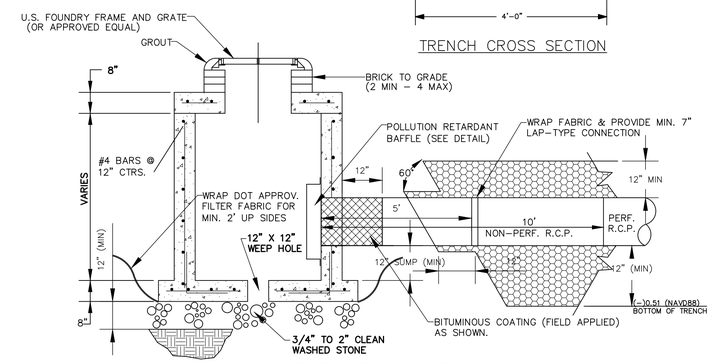

CATCH BASIN AND EXFILTRATION TRENCH DETAIL

NTS

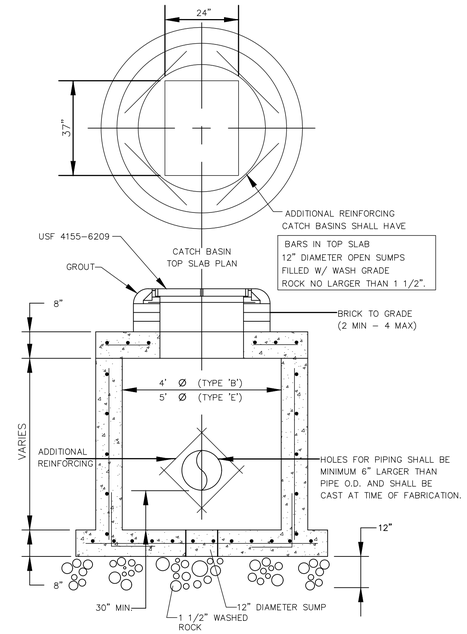

TYPE 'B' AND 'E' CATCH BASIN

N.T.S.

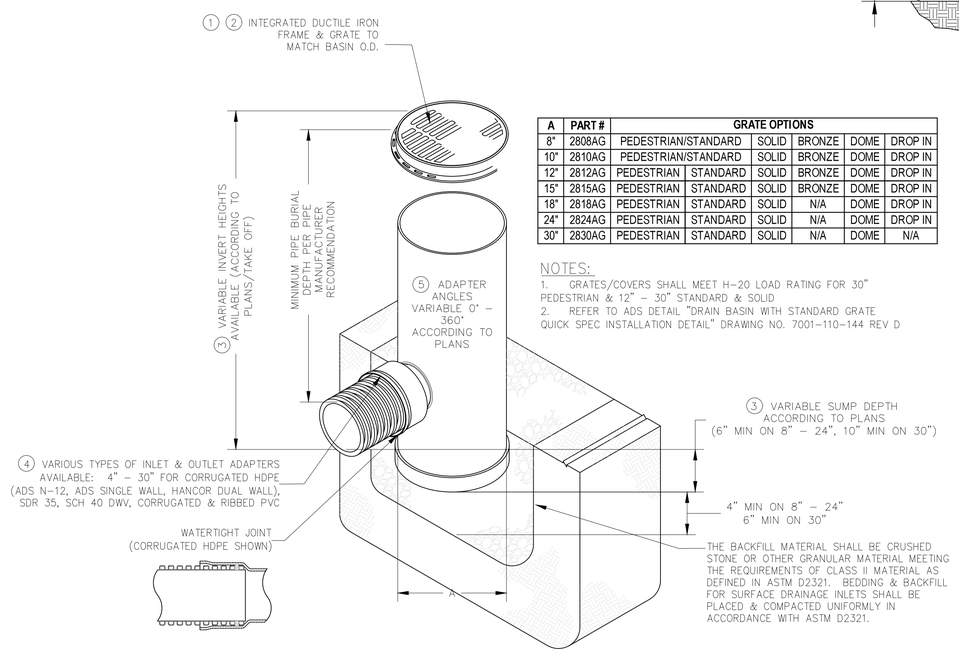

A	PART #	GRATE OPTIONS					
8"	2808AG	PEDESTRIAN/STANDARD	SOLID	BRONZE	DOME	DROP IN
10"	2810AG	PEDESTRIAN/STANDARD	SOLID	BRONZE	DOME	DROP IN
12"	2812AG	PEDESTRIAN	STANDARD	SOLID	BRONZE	DOME	DROP IN
15"	2815AG	PEDESTRIAN	STANDARD	SOLID	BRONZE	DOME	DROP IN
18"	2818AG	PEDESTRIAN	STANDARD	SOLID	N/A	DOME	DROP IN
24"	2824AG	PEDESTRIAN	STANDARD	SOLID	N/A	DOME	DROP IN
30"	2830AG	PEDESTRIAN	STANDARD	SOLID	N/A	DOME	N/A

NOTES:

1. GRATES/COVERS SHALL MEET H-20 LOAD RATING FOR 30" PEDESTRIAN & 12" - 30" STANDARD & SOLID
2. REFER TO ADS DETAIL "DRAIN BASIN WITH STANDARD GRATE QUICK SPEC INSTALLATION DETAIL" DRAWING NO. 7001-110-144 REV D

① - 8" - 30" GRATES/SOLID COVERS SHALL BE DUCTILE IRON PER ASTM A536 GRADE 70-50-05, WITH THE EXCEPTION OF THE 8" - 15" BRONZE GRATES
② - 12" - 30" FRAMES SHALL BE DUCTILE IRON PER ASTM A536 GRADE 70-50-05
③ - DRAIN BASIN TO BE CUSTOM MANUFACTURED ACCORDING TO PLAN DETAILS. RISERS ARE NEEDED FOR BASINS OVER 84" DUE TO SHIPPING RESTRICTIONS. SEE DRAWING NO. 7001-110-065
④ - DRAINAGE CONNECTION STUB JOINT TIGHTNESS SHALL CONFORM TO ASTM D3212 FOR CORRUGATED HDPE (ADS & HANCOR DUAL WALL) & SDR 35 PVC
⑤ - ADAPTERS CAN BE MOUNTED ON ANY ANGLE 0° TO 360°. TO DETERMINE MINIMUM ANGLE BETWEEN ADAPTERS SEE DRAWING NO. 7001-110-012, 7001-110-013, & 7001-110-014.
6 - GRATES SHALL MEET H-10 LOAD RATING FOR 12" - 24" PED
7 - GRATES SHALL MEET H-20 LOAD RATING FOR 30" PED & 12" - 30" STD & SOLID
8 - ALL BRONZE GRATES, DROP IN GRATES, & 8" & 10" PED/STD GRATES & SOLID COVERS ARE RATED FOR LIGHT DUTY APPLICATIONS ONLY
9 - DOME GRATES HAVE NO LOAD RATING

NYLOPLAST DRAIN BASIN

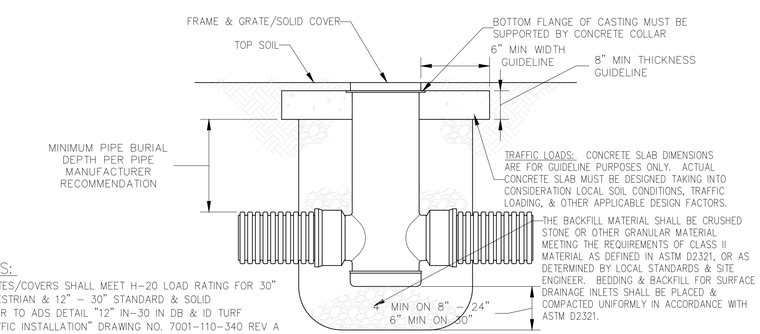

NOTES:

1. GRATES/COVERS SHALL MEET H-20 LOAD RATING FOR 30" PEDESTRIAN & 12" - 30" STANDARD & SOLID
2. REFER TO ADS DETAIL "12" IN-30 IN DB & ID TURF TRAFFIC INSTALLATION" DRAWING NO. 7001-110-340 REV A

NYLOPLAST TURF TRAFFIC INSTALLATION

ADS -12" - 30" DRAIN BASIN

SUBMITTED FOR APPROVAL
03-01-2018

NO.	REVISION	DATE

FOR BLDG DEPT PERMIT

DAVID POSNACK JEWISH DAY SCHOOL

412 SW 11TH STREET, HALLANDALE BEACH, FL 33009

FOR: DP JDS

CORDOVA RODRIGUEZ & ASSOCIATES, INC.
ENGINEERS - PLANNERS
AUTHORIZATION No. 8459
CORDOVA RODRIGUEZ & ASSOCIATES, INC.
6941 SW 196TH AVENUE, SUITE 25.
PEMBROKE PINES, FLORIDA 33332
TEL: (954) 880-0180
FAX: (954) 880-0188
WWW.CRAENGINEERING.COM

ROSANA D. CORDOVA, P.E.
LICENSED ENGINEER
FL LICENSED P.E. No. 41864
DATE:

LUIS E. RODRIGUEZ, P.E.
LICENSED ENGINEER
FL LICENSED P.E. No. 54287
DATE:

DESIGN: LER	CHECKED: RDC
SCALE: NTS	
DATE: 03-01-2018	
PROJECT NO. 16-199.01	
SHT 05 OF 10	
DWG NO. C-202.1	

PAVING, GRADING AND DRAINAGE DETAILS 2

SAVED: 03/1/2018 2:28:53 PM

N:\16-199.01 - David Posnack Jewish Day School\16-199.01-C-202.1-PAVING-GRADING-DETAILS-2.dwg

C-202.1

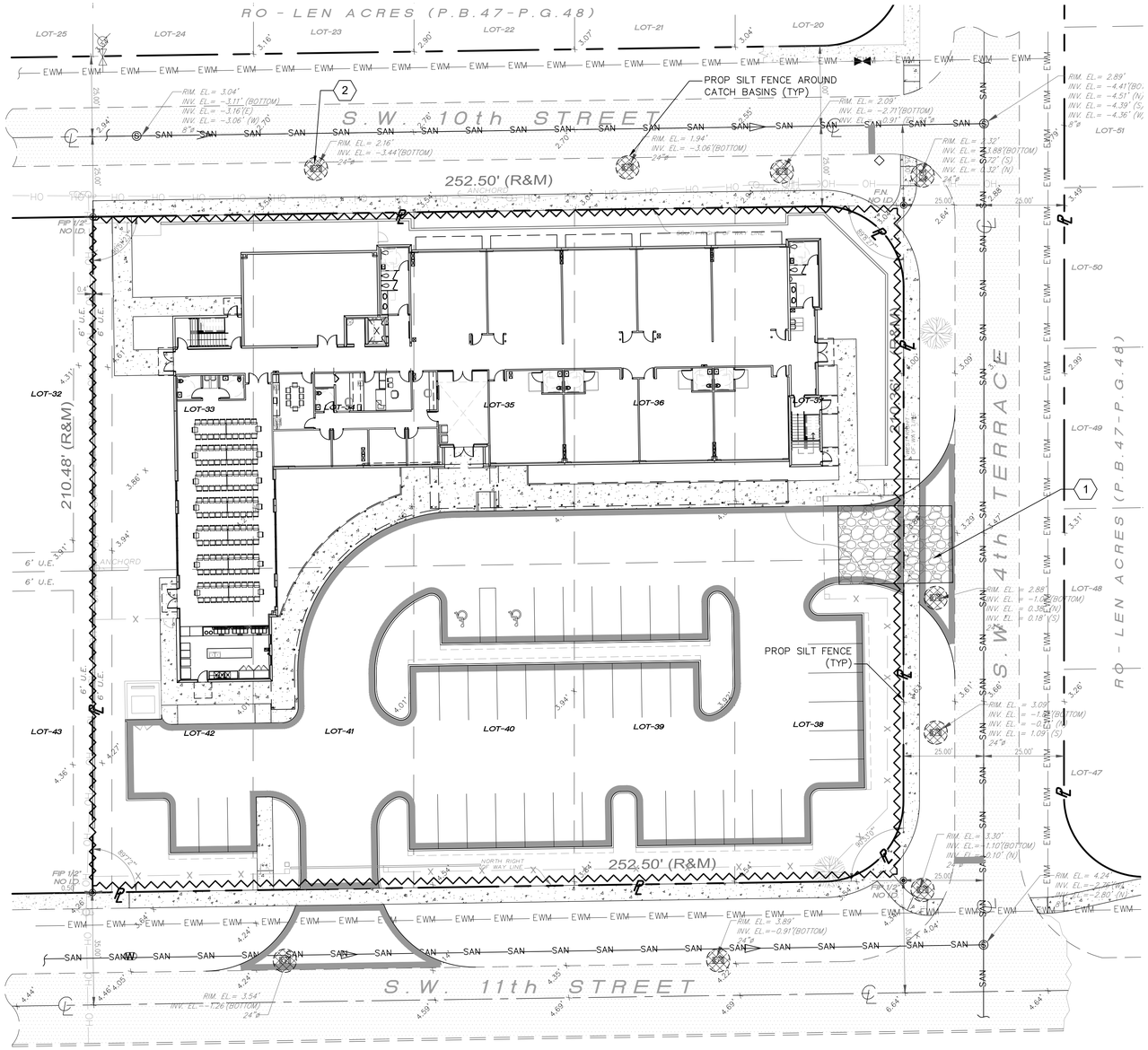

LEGEND

- PROPERTY LINE
- CENTER LINE OF ROAD
- EXISTING WATER METER
- PROP ELEVATION
- EXIST ELEVATION
- EXIST ASPHALT PAVEMENT
- CONCRETE SIDEWALK
- PROP PAVEMENT
- PROP CB WITH EXFILTRATION TRENCH
- YARD DRAIN
- STORM MANHOLE
- EXISTING WATER MAIN
- SANITARY SEWER MAIN
- OVERHEAD UTILITY
- SILT FENCE
- SILT FENCE AROUND CATCH BASIN
- TRUCK WASHING STATION / TRACKING

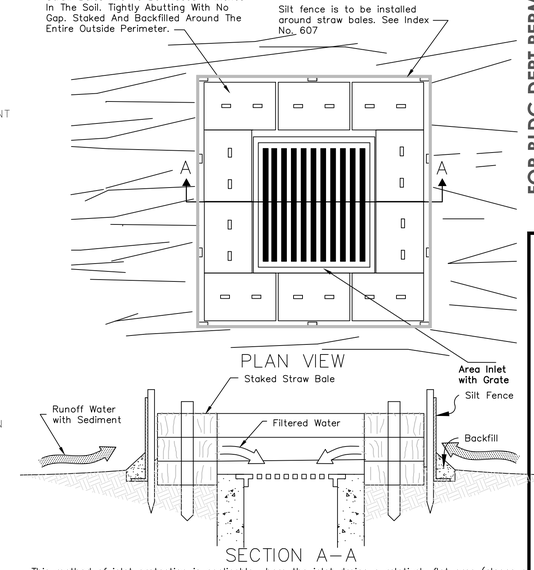

This method of inlet protection is applicable where the inlet drains a relatively flat area (slopes n greater than 5%) where sheet or overland flows (not exceeding 0.5 cfs) are typical. The method shall not apply to inlets receiving concentrated flows, such as street or highway medians.

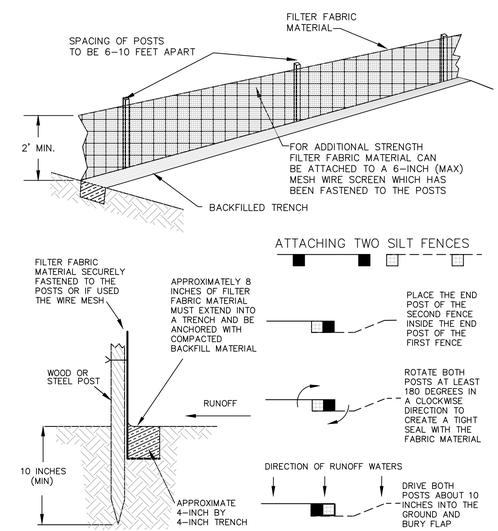

KEY NOTES

1. TRUCK WASH STATION / TRACKING PER FDOT STANDARDS. EXACT LOCATION TO BE ADJUSTED AS NEEDED BASED ON CONSTRUCTION PHASING.
2. INSTALL SILT FENCE / FABRIC AROUND CATCH BASIN (TYP)

I CERTIFY UNDER PENALTY OF LAW THAT I UNDERSTAND AND SHALL COMPLY WITH THE TERMS AND CONDITIONS OF THE STATE OF FLORIDA GENERAL PERMIT FOR STORMWATER DISCHARGE FROM LARGE AND SMALL CONSTRUCTION ACTIVITIES AND THIS STORMWATER POLLUTION PREVENTION PLAN PREPARED THEREUNDER".

NAME	TITLE	COMPANY NAME, ADDRESS AND PHONE NUMBER	DATE

1. CONSTRUCTION ACTIVITY AND SEQUENCE OF MAJOR ACTIVITIES SHALL CONSIST OF CLEARING, GRUBBING AND DEMUCKING THE SITE PRIOR TO FILLING THE SITE AND CONSTRUCTION.
2. APPROXIMATELY 1.26 ACRES WILL BE DISTURBED DURING CONSTRUCTION.
3. THE SILT FENCE SHALL BE INSTALLED ALONG THE PROPERTY BOUNDARY PRIOR TO ANY CONSTRUCTION ACTIVITIES AND SHALL REMAIN IN PLACE UNTIL SUCH TIME THAT THE CONSTRUCTION IS COMPLETED.
4. NO SOLID MATERIALS SHALL BE DISCHARGED TO SURFACE WATERS.
5. OFF–SITE VEHICLE TRACKING OF SEDIMENTS AND THE GENERATION OF DUST SHALL BE MINIMIZED.
6. MAINTENANCE INSPECTIONS WILL BE CONDUCTED BY THE CONTRACTOR AT A MINIMUM ON A WEEKLY BASIS AND ON DAYS WITH RAIN EVENTS OF 1/2" OR GREATER.
7. POSSIBLE SOURCES OF NON–STORMWATER DISCHARGE MAY INCLUDE WATER USED FOR DUST CONTROL.
8. ANY CONTRACTOR CONDUCTING WORK ON THE SITE SHALL SIGN THE CONTRACTOR CERTIFICATION.
9. HAY BALES AND FILTER FABRIC SHALL BE USED IN THE CATCH BASINS UNTIL CONSTRUCTION IS COMPLETED AND THE SYSTEM IS READY FOR OPERATION.
10. CONTRACTOR SHALL COMPLY WITH ALL TERMS AND CONDITIONS OF THE US ENVIRONMENTAL PROTECTION AGENCY (EPA) NATIONAL POLLUTANT DISCHARGE ELIMINATION SYSTEM (NPDES) PERMIT, IN PARTICULAR, SEDIMENT AND EROSION CONTROLS AND STORM WATER MANAGEMENT MEASURES SHALL BE STRICTLY FOLLOWED.

PHASING NOTES:

1. CONTRACTOR TO ADJUST LIMITS OF SILT FENCE ACCORDING TO THE PHASING OF THE PROJECT.
2. CONTRACTOR RESPONSIBLE APPLY AND FILE NOI WITH FDEP AND TO UPDATE SWPPP AS REQUIRED.

SUBMITTED FOR APPROVAL
03-01-2018

NO.	REVISION	DATE

FOR BLDG DEPT PERMIT

PLOTTED ON 6/20/2018 8:26:46 AM

DAVID POSNACK JEWISH DAY SCHOOL
412 SW 11TH STREET, HALLANDALE BEACH, FL 33009
FOR: DP JDS

SAVED ON 4/10/2018 2:48:30 PM

CORDOVA RODRIGUEZ & ASSOCIATES, INC.
ENGINEERS • PLANNERS
AUTHORIZATION No. 8459
CORDOVA RODRIGUEZ & ASSOCIATES, INC.
6961 SW 196TH AVENUE, SUITE 28
PEMBROKE PINES, FLORIDA 33332
TEL: (954) 880-0180
FAX: (954) 880-0188
WWW.CRAENGINEERING.COM

ROSANA D CORDOVA, P.E.
LICENSED ENGINEER
FL LICENSED P.E. No. 41864
DATE:

LUIS E. RODRIGUEZ, P.E.
LICENSED ENGINEER
FL LICENSED P.E. No. 54287
DATE:

DESIGN: LER | CHECKED: RDC

SCALE: 1 " = 20'

DATE: 03-01-2018

PROJECT NO. 16-199.01

SHT 06 OF 10

DWG NO. C-203

STORMWATER POLLUTION PREVENTION PLAN

C-203

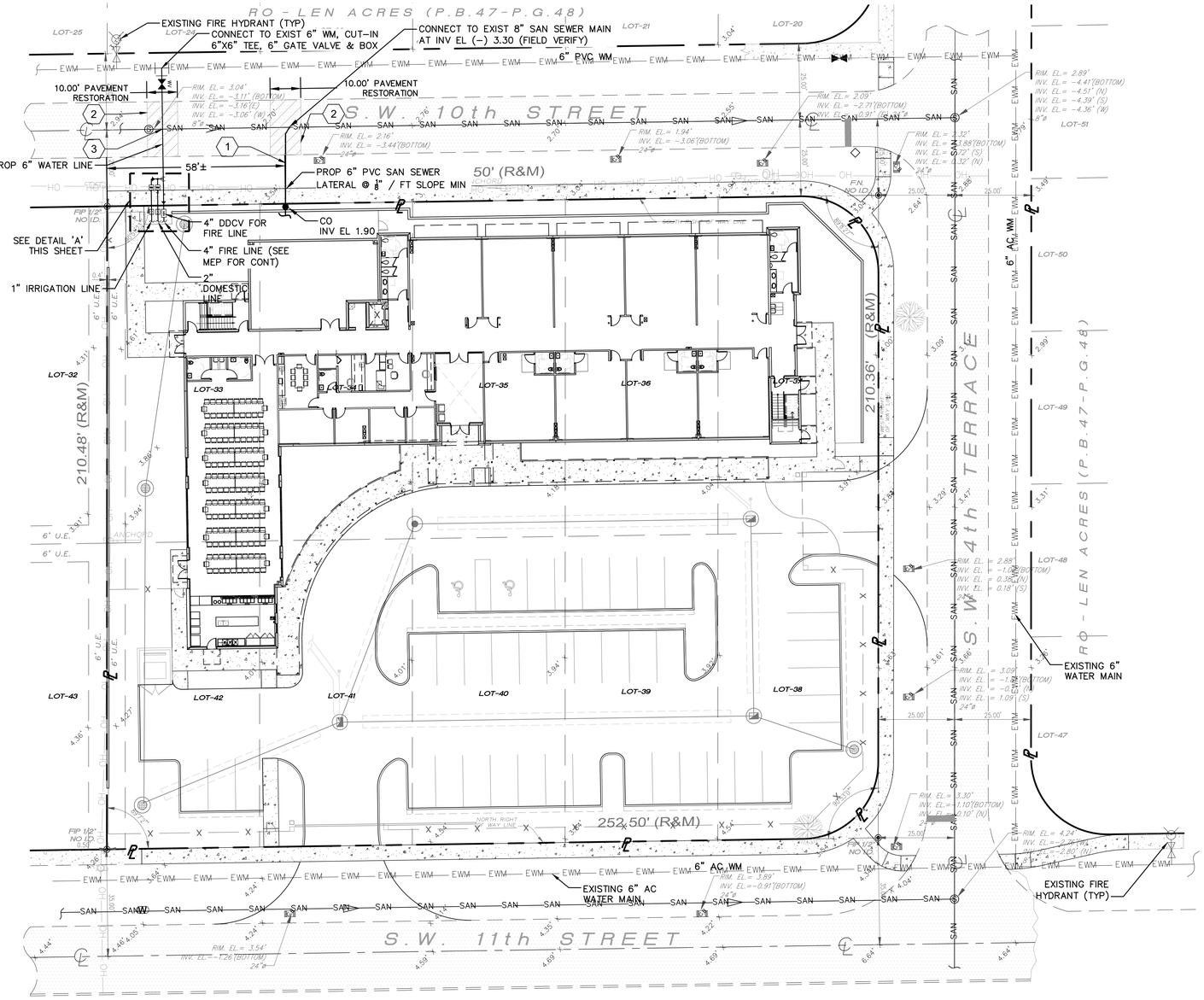

LEGEND

- PROPERTY LINE
- CENTER LINE OF ROAD
- EXISTING WATER METER
- EXIST ASPHALT PAVEMENT
- CONCRETE SIDEWALK
- PAVEMENT RESTORATION
- EWM — EXISTING WATER MAIN
- SAN — SANITARY SEWER MAIN
- OH — OVERHEAD UTILITY
- WM — PROP WATER METER

LOCATION MAP

NTS

LEGAL DESCRIPTION

LOTS 33 THROUGH 42, BOTH INCLUDED, OF RO-LEN ACRES, ACCORDING TO THE PLAT THEREOF, AS RECORDED IN PLAT BOOK 47, AT PAGE 48, OF THE PUBLIC RECORDS OF BROWARD COUNTY, FLORIDA.

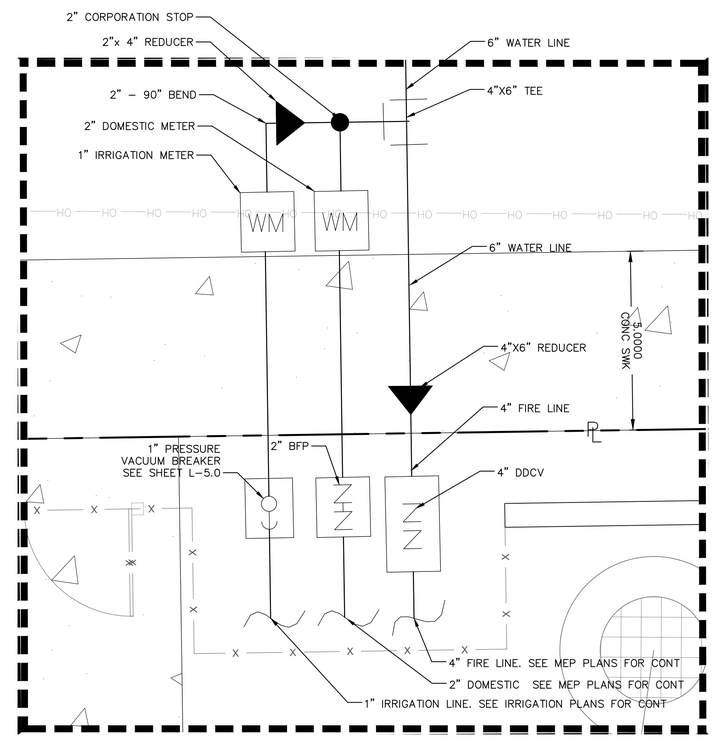

DETAIL 'A'

NTS

NOTE:
CAUTION, ELECTRICAL OVERHEAD LINES IN THE AREA.

GRAPHIC SCALE: 0, 10', 20', 40'

KEY NOTES

1. FIELD VERIFY POSSIBLE CROSSING WITH EXISTING DRAINAGE PIPE.
2. PAVEMENT / SWALE RESTORATION PER CITY OF HALLANDALE BEACH REQUIREMENTS / STANDARDS.
3. PROPOSED WATER LINE TO CROSS OVER EXISTING 6" WATER MAIN SEE DETAILS FOR MORE MIN CLEARANCE OVER SAN SEWER.

NOTES

1. REFER TO DEMO SHEET FOR REMOVAL/CAP OF EXISTING SEWER LATERAL

SUBMITTED FOR APPROVAL
03-01-2018

NO.	REVISION	DATE

FOR BLDG DEPT PERMIT

DAVID POSNACK JEWISH DAY SCHOOL

412 SW 11TH STREET, HALLANDALE BEACH, FL 33009
FOR: DP JDS

CORDOVA RODRIGUEZ & ASSOCIATES, INC.
ENGINEERS · PLANNERS
AUTHORIZATION No. 8659
CORDOVA RODRIGUEZ & ASSOCIATES, INC.
6961 SW 196TH AVENUE, SUITE 29
PEMBROKE PINES, FLORIDA 33332
TEL: (954) 880-0180
FAX: (954) 880-0188
WWW.CRAENGINEERING.COM

ROSANA D. CORDOVA, P.E.
LICENSED ENGINEER
FL LICENSED P.E. No. 41864
DATE:

LUIS E. RODRIGUEZ, P.E.
LICENSED ENGINEER
FL LICENSED P.E. No. 54287
DATE:

WATER AND SEWER PLAN

DESIGN: LER	CHECKED: ROC
SCALE:	1 " = 20'
DATE:	03-01-2018
PROJECT NO.	16-199.01
SHT	07 OF 10
DWG NO.	C-301

C:\16-199.01-11th-st-sch-dwg\dwg\16-199.01-C-301-BS.dwg
SAVED: 09/24/2018 8:31:07 PM
PLOTTED ON 09/24/2018 10:12:12 AM
C-301

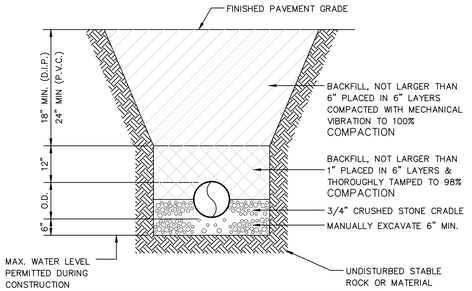

NOTES:
1. MAXIMUM DENSITY DETERMINED BY AASHTO T-99
2. MAXIMUM DEPTH TO BOTTOM OF PRESSURE MAINS SHALL NOT EXCEED SIX (6) FEET.

TYPICAL TRENCH DETAIL

N.T.S.

WATER MAIN SEPARATION IN ACCORDANCE WITH F.A.C. RULE 62-555.314

OTHER PIPE	HORIZONTAL SEPARATION	CROSSINGS (1) (5)	JOINT SPACING @ CROSSINGS (FULL JOINT CENTERED)
STORM SEWER, STORM WATER FORCE MAIN, RECLAIMED WATER (2)	Water Main — 3 ft. minimum	Water Main — 12 inches is the minimum, except for storm sewer, then 6 inches is the minimum and 12 inches is preferred	Alternate 3 ft. minimum — Water Main
VACUUM SANITARY SEWER	Water Main — 10 ft. preferred — 3 ft. minimum	Water Main — 12 inches preferred 6 inches minimum	Alternate 3 ft. minimum — Water Main
GRAVITY OR PRESSURE SANITARY SEWER, SANITARY SEWER FORCE MAIN, RECLAIMED WATER (4)	Water Main — 10 ft. preferred — 6 ft. minimum	Water Main — 12 inches is the minimum, except for gravity sewer, then 6 inches is the minimum and 12 inches is preferred	Alternate 6 ft. minimum — Water Main
ON-SITE SEWAGE TREATMENT & DISPOSAL SYSTEM	10 ft. minimum	——	——

(1) WATER MAIN SHOULD CROSS ABOVE OTHER PIPE. WHEN WATER MAIN MUST BE BELOW OTHER PIPE, THE MINIMUM SEPARATION IS 12 INCHES.
(2) RECLAIMED WATER REGULATED UNDER PART III OF CHAPTER 62-610, F.A.C.
(3) 3 FT. FOR GRAVITY SANITARY SEWER WHERE THE BOTTOM OF THE WATER MAIN IS LAID AT LEAST 6 INCHES ABOVE THE TOP OF THE GRAVITY SANITARY SEWER.
(4) RECLAIMED WATER NOT REGULATED UNDER PART III OF CHAPTER 62-610, F.A.C.
(5) 18" MINIMUM SEPARATION REQUIRED BY BCWWS, UNLESS OTHERWISE APPROVED.

WATER MAIN SEPARATION

N.T.S.

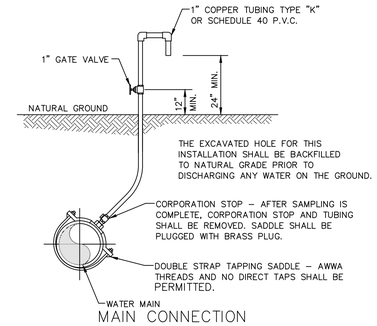

SAMPLE POINT DETAIL

N.T.S.

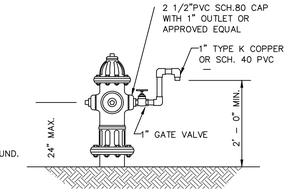

HYDRANT CONNECTION

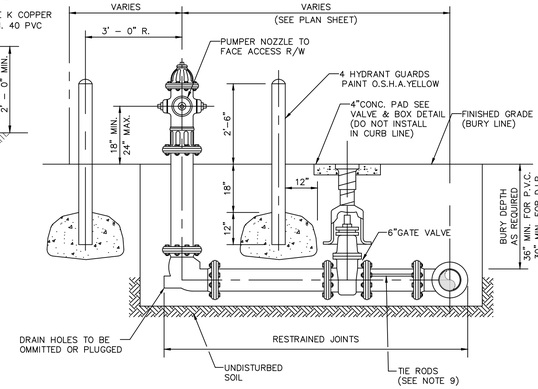

NOTES:
1. HYDRANT GUARDS TO BE SCH.40 G.S.P. FILLED WITH CONCRETE, IF REQUIRED BY THE UTILITY DEPARTMENT OR FIRE DEPARTMENT.
2. OMIT REAR GUARDS IN LOCATIONS WHERE SIDEWALKS EXIST.
3. TIE RODS MAY BE OMITTED WHEN OTHER APPROVED ANCHORS ARE USED.
4. HYDRANT SET BACK SHALL CONFORM TO D.O.T. REQUIREMENTS WHERE APPLICABLE.
6. HYDRANT SHALL BE 3 WAY 5 1/4" WITH 3'-6" BURY DEPTH. PUMPER NOZZLE TO FACE STREET. PAINT OSHA YELLOW.
7. HYDRANT VALVE TO BE INSTALLED AS CLOSE TO MAIN AS POSSIBLE.
8. HYDRANT BURY LINE TO MATCH ADJACENT ASPHALT ELEVATION.
9. TIE RODS SHALL BE 2 EA. 5/8" GALV. AND COATED WITH KOPPERS 300M OR APPROVED EQUAL.
10. A 7.5 FOOT CLEAR RADIUS SHALL BE MAINTAINED AROUND HYDRANT.

FIRE HYDRANT DETAIL

N.T.S.

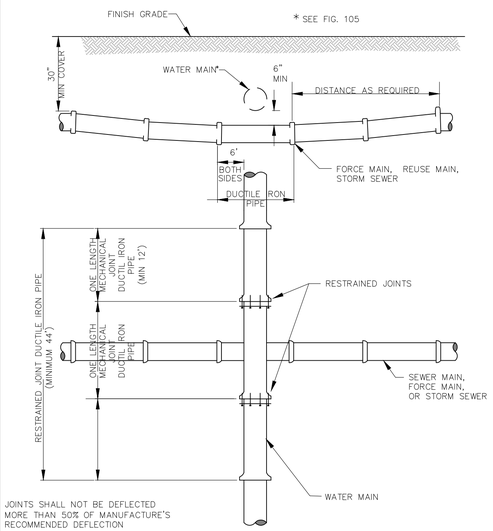

STANDARD UTILITY CROSSING

N.T.S.

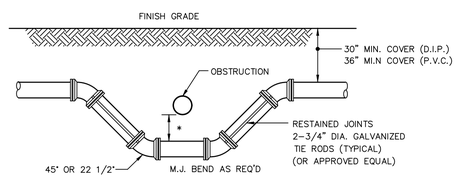

(*) 18" MIN. CLEARANCE REQUIRED FOR WATER & SEWER MAIN CROSSINGS, 12" MIN. CLEARANCE REQUIRED FOR OTHER UTILITIES CROSSINGS.

COAT TIE RODS WITH A COAL TAR ENAMEL AFTER ASSEMBLY (2 COATS MIN.).

TIE RODS MAY BE OMITTED WHEN OTHER APPROVED METHODS OF

UTILITY CROSSING FITTING TYPE

N.T.S.

NOTE:
METER AND METER BOX SUPPLIED & INSTALLED BY CITY. BACKFLOW PREVENTER SHALL BE INSTALLED DOWNSTREAM OF METER PER CODE. 18" MIN SEPARATION SHALL BE MAINTAINED BETWEEN SERVICE SADDLES.

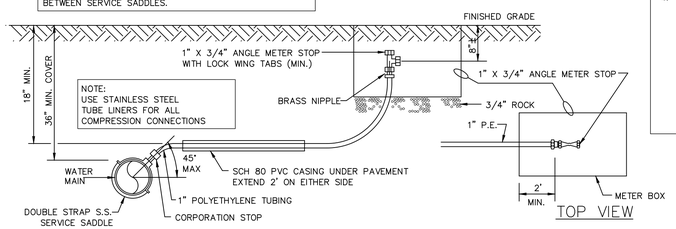

TYPICAL WATER SERVICE CONNECTION

N.T.S.

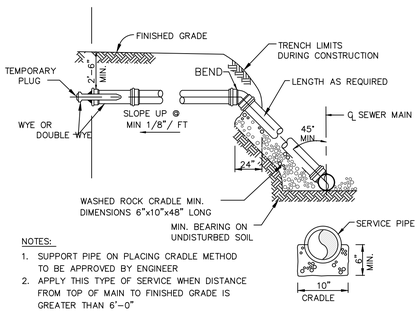

NOTES:
1. SUPPORT PIPE ON PLACING CRADLE METHOD TO BE APPROVED BY ENGINEER
2. APPLY THIS TYPE OF SERVICE WHEN DISTANCE FROM TOP OF MAIN TO FINISHED GRADE IS GREATER THAN 6'-0"

DEEP SEWER SERVICE

N.T.S.

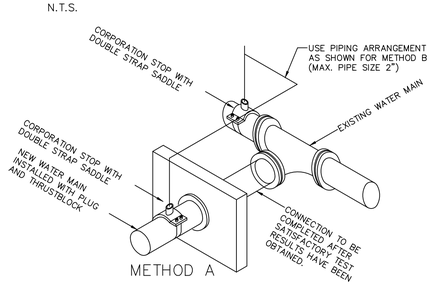

METHOD A

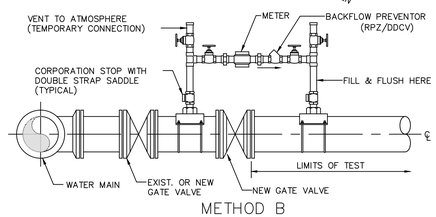

METHOD B

NOTES:
1. WATER MAIN TO BE PRESSURE TESTED AND DISINFECTED ACCORDING TO BROWARD COUNTY PUBLIC HEALTH UNIT REGULATIONS, AWWA, AND MUNICIPAL SPECIFICATIONS IN EFFECT.
2. BACTERIOLOGICAL TESTS ARE TO BE PERFORMED BY THE CONTRACTOR AND AN APPROVED TESTING LABORATORY.
3. REMOVE TEMPORARY CONNECTION AT SADDLE ON NEW MAINS AFTER FILLING AND FLUSHING HAS BEEN COMPLETED AND REPLACE WITH BRASS PLUG.
4. PROVIDE ALL NECESSARY THRUST BLOCKS OR OTHER RESTRAINTS.
5. FILLING AND FLUSHING LOCATIONS SHALL BE COORDINATED BY THE CONTRACTOR, ENGINEER, AND CITY.
6. VENT TO ATMOSPHERE SHALL REMAIN OPEN DURING ALL PHASES OF PRESSURE TESTING.

FILLING AND FLUSHING DETAIL

N.T.S.

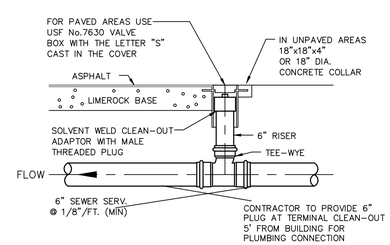

NOTE:
ROUGH IN RISER TO 1 FOOT ABOVE FINISHED GRADE, AND CAP. CUT BACK TO FINISHED GRADE AFTER PROJECT COMPLETION.

CLEAN-OUT DETAIL

N.T.S.

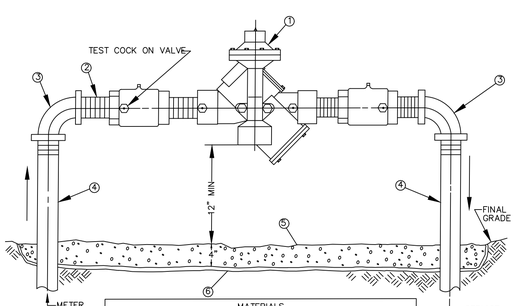

MATERIALS			
ITEM	QUANT		DESCRIPTION
1	1	1"	BACKFLOW PREVENTER ASSEMBLY
2*	2	1" X NOM	NIPPLES-BRASS OR COPPER
3	2	1" X 90%	ELBOWS-BRASS OR COPPER
4	2	1" X VARIES	RISER-BRASS OR COPPER
5	*		PEA GRAVEL
6	*		PLASTIC LINER

NOTES: *INSTALL UNION (S) TO FACILITATE REMOVAL / INSTALLATION
INSTALLATION SHOWN ABOVE IS FOR A 1" SERVICE.
CHANGE PIPING MATERIALS ACCORDINGLY FOR SERVICE SIZE

DOUBLE CHECK OR REDUCED PRESSURE BACKFLOW PREVENTER

N.T.S.

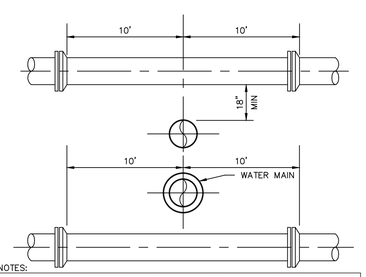

NOTES:
1. A WATER MAIN SHOULD CROSS OVER PIPES WHEREVER POSSIBLE MAINTAINING A 36 INCH COVER FOR PVC, 30 INCH COVER FOR D.I.P. AND 18 INCH SEPARATION AS MINIMUMS.
2. WHEREVER A WATER MAIN CROSSES UNDER A SEWER MAIN, OR CROSSES OVER WITH LESS THAN 18 INCHES VERTICAL SEPARATION, THEN D.I.P. SHALL BE USED FOR BOTH PIPES FOR A DISTANCE OF 20 FEET CENTERED ON CROSSING WITH NO JOINTS WITHIN 10 FEET OF THE CROSSING.
3. 18 INCH SEPARATION SHOULD BE MAINTAINED BETWEEN ALL PIPES (STORM, SEWER, WATER) WHENEVER POSSIBLE. 12 INCHES IS THE ABSOLUTE MINIMUM SEPARATION WITH D.I.P. REQUIRED FOR ANY SEPARATION LESS THAN 18 INCHES.
4. MAINTAIN 10 FEET HORIZONTAL SEPARATION BETWEEN WATER AND SEWER AS A MINIMUM.
5. 3 FOOT HORIZONTAL CLEARANCE SHALL BE PROVIDED BETWEEN UTILITIES AND ANY OBSTRUCTIONS (CATCH BASINS, CONCRETE POLES, ETC.)
6. 5 FOOT HORIZONTAL CLEARANCE SHALL BE PROVIDED BETWEEN UTILITIES AND TREES.

UTILITY CROSSING GENERAL REQUIREMENTS

N.T.S.

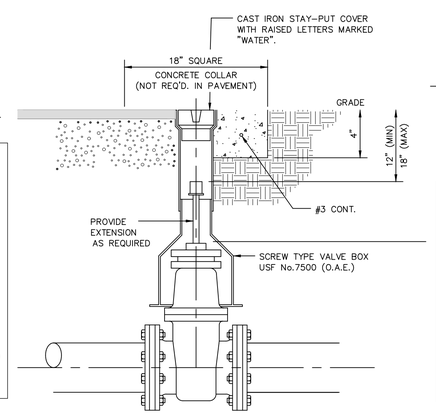

VALVE AND BOX DETAIL

N.T.S.

SUBMITTED FOR APPROVAL
03-01-2018

Know what's below. Call before you dig.

FOR BLDG DEPT PERMIT

NO.	REVISION	DATE

DAVID POSNACK JEWISH DAY SCHOOL
412 SW 11TH STREET, HALLANDALE BEACH, FL 33009
FOR: DP JDS

CORDOVA RODRIGUEZ & ASSOCIATES, INC.
ENGINEERS · PLANNERS
AUTHORIZATION NO. 8659
CORDOVA RODRIGUEZ & ASSOCIATES, INC.
6161 SW 196TH AVENUE, SUITE 28
PEMBROKE PINES, FLORIDA 33332
TEL: (954) 880-0180
FAX: (954) 880-0181
WWW.CRAENGINEERING.COM

ROSANA D CORDOVA, P.E.
LICENSED ENGINEER
FL LICENSED P.E. No. 41864
DATE:

LUIS E. RODRIGUEZ, P.E.
LICENSED ENGINEER
FL LICENSED P.E. No. 54287
DATE:

WATER AND SEWER DETAILS

DESIGN: LER	CHECKED: RDC
SCALE:	NTS
DATE:	03-01-2018
PROJECT NO.	16-199.01
SHT 08 OF 10	
DWG NO.	C-302

C:\16-199.01\Files-cad-eng\dwg\16199.01-C-302-DP-01.dwg
SAVED ON 1/25/2017 10:33:25 PM
PLOTTED ON 10/01/2018 10:35:21 AM
C-302

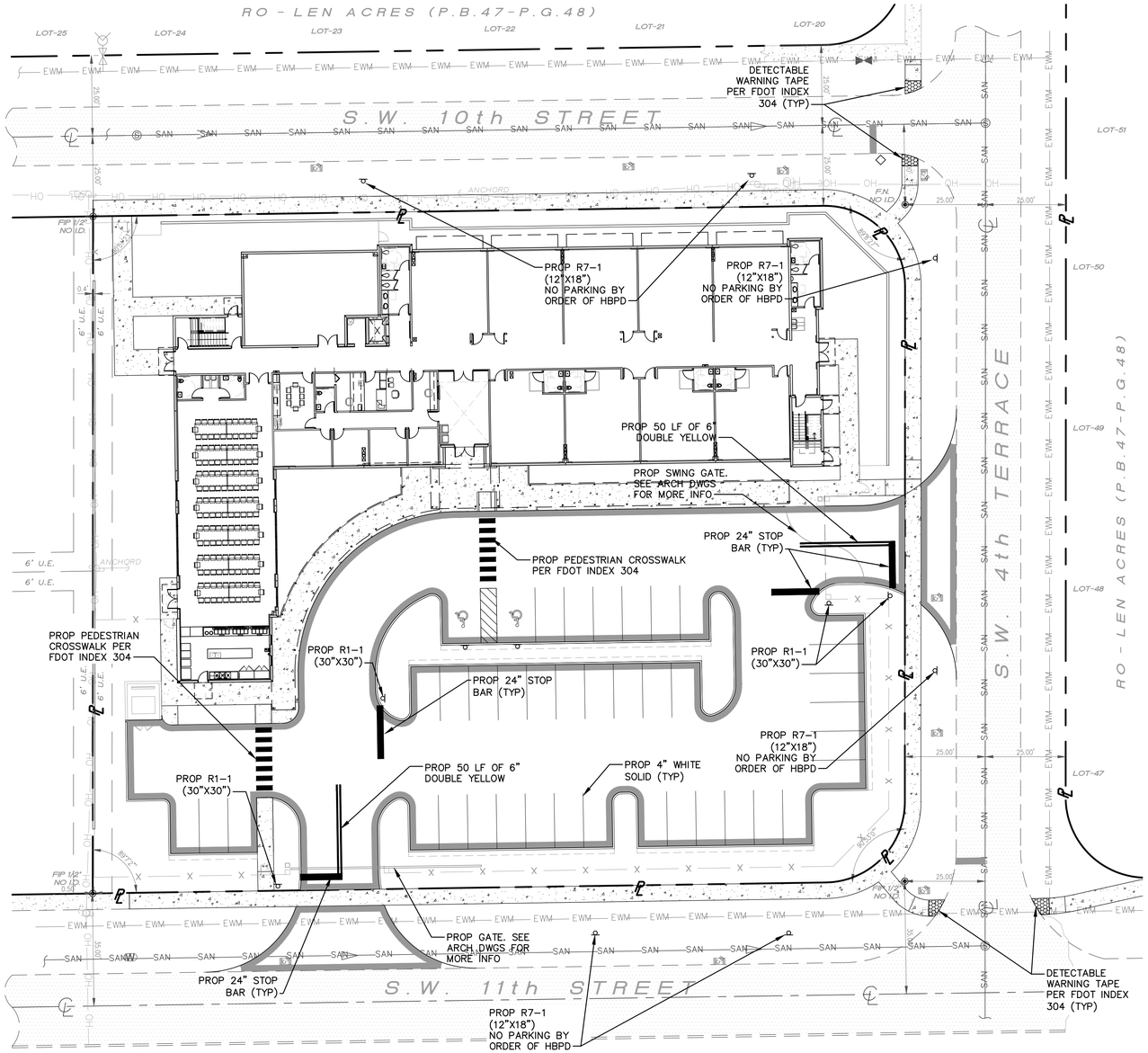

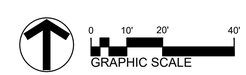

LEGEND

- PROPERTY LINE
- CENTER LINE OF ROAD
- EXISTING WATER METER
- DENOTES N.G.V.D. 29 IN FEET
- EXIST ASPHALT PAVEMENT
- CONCRETE SIDEWALK
- PROP PAVEMENT
- EXISTING WATER MAIN
- SANITARY SEWER MAIN
- OVERHEAD UTILITY
- DETECTABLE WARNING

LOCATION MAP

NTS

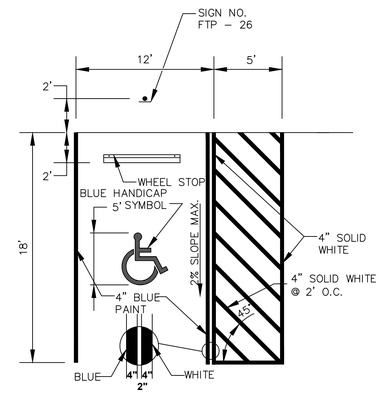

HANDICAP STALL DETAIL

NTS

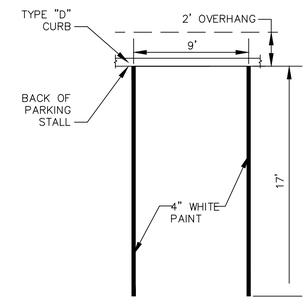

TYPICAL PARKING STALL DETAIL

NTS

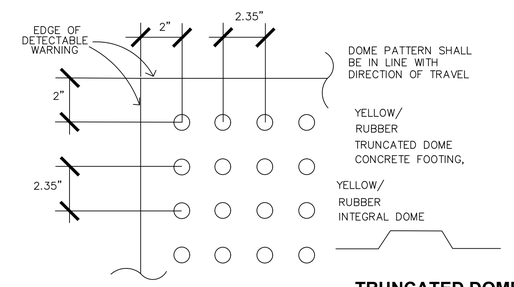

NOTES:
1. ALL SIDEWALK CURB RAMPS SHALL HAVE DETECTABLE WARNNG TAPE PER FDOT INDEX No 304.
2. TRUNCATED DOME MUST BE CAST IN PLACE.

SIDEWALK CURB RAMP / DETECTABLE WARNING TAPE

NTS

PAVEMENT SIGNING & MARKING NOTES:

1. ALL PAVEMENT MARKINGS AND SIGNAGE SHALL BE IN ACCORDANCE WITH THE "MANUAL ON UNIFORM TRAFFIC CONTROL DEVICES". LATEST EDITION.
2. ALL STOP BARS TO BE 4' BEHIND CROSSWALK OR SIDEWALK.
3. PAVEMENT MARKING & STRIPING SHALL BE IN ACCORDANCE WITH FDOT DESIGN STANDARDS INDEX NO. 17346 DETECTABLE WARNING AND PROPOSED SIDEWALK TO BE INSTALLED PER FDOT INDEX No. 304.LOCA
4. LOCATION OF "NO PARKING" SIGNS ALONG THE RIGHT OF WAY TO BE COORDINATED WITH PROPOSED LANDSCAPING PLANS.

SUBMITTED FOR APPROVAL
03-01-2018

FOR BLDG DEPT PERMIT

NO.	REVISION	DATE

DAVID POSNACK JEWISH DAY SCHOOL

412 SW 11TH STREET, HALLANDALE BEACH, FL 33009
FOR: DP JDS

CORDOVA RODRIGUEZ & ASSOCIATES, INC.
ENGINEERS - PLANNERS
AUTHORIZATION No. 8459
CORDOVA RODRIGUEZ & ASSOCIATES, INC.
6941 SW 196TH AVENUE, SUITE 28
PEMBROKE PINES, FLORIDA 33332
TEL: (954) 880-0180
FAX: (954) 880-0181
WWW.CRAENGINEERING.COM

ROSANA D. CORDOVA, P.E.
LICENSED ENGINEER
FL LICENSED P.E. No. 41864
DATE:

LUIS E. RODRIGUEZ, P.E.
LICENSED ENGINEER
FL LICENSED P.E. No. 54287
DATE:

SIGNING AND MARKING PLAN

DESIGN: LER	CHECKED: RDC
SCALE:	1 " = 20'
DATE:	03-01-2018
PROJECT NO.	16-199.01
SHT	09 OF 10
DWG NO.	C-401

C-401

I. APPLICABLE CODES

A. GENERAL

1. All construction and materials shall conform to the Standards and Specifications of the jurisdictional agencies, Broward County Environmental Protection and Growth Management Department (BCEPGMD), Broward County Health Department (BCHD), South Florida Water Management District (SFWMD), Florida Department of Environmental Protection (FDEP) and all other local and national codes where applicable.

2. If a conflict exists between these General specifications and the Contract Specifications, the most restrictive specification shall govern.

B. CONSTRUCTION SAFETY

All construction shall be performed in a safe manner, specifically, the rules and regulations of the Occupational Safety and Health Administration (OSHA) and the Manual of Uniform Traffic Control Devices (MUTCD) shall be strictly observed.

C. TRENCH SAFETY ACT

Contractor shall be solely responsible for compliance with the State of Florida Trench Safety Act.

D. SURVEY DATA

All elevations on the plans or referenced in the specifications are based on NGVD29 DATUM.

II. PRE-CONSTRUCTION RESPONSIBILITIES

A. Upon receipt of Notice to Proceed and after obtaining an engineering construction permit from the City, the Contractor shall arrange a Preconstruction Conference to include all involved government agencies, the City Engineer, the Owner, a Utility representative, and the Engineer of Record.

B. The Contractor shall obtain an "811 Call" Certification number and notify the Utilities Department at least 48 hours prior to beginning any excavation.

C. Prior to beginning construction, the Contractor shall verify the size, location, elevation, and material of all existing utilities within the area of construction.

D. Existing utility locations shown on these plans are approximate. The Engineer assumes no responsibility for the accuracy of existing utilities shown or for any existing utilities not shown.

E. The Contractor shall be responsible for damage to any existing utilities for which it fails to request locations from the utility owner. The Contractor is responsible as well for damage to any existing utilities which are properly located.

F. If upon excavation, an existing utility is found to be in conflict with the proposed construction or to be of a size or material different from that shown on the plans, the Contractor shall immediately notify the Engineer.

G. Contractor shall use extreme caution while working under, over and around existing overhead and/or underground electric lines including fiber optics.

H. Contractor shall contact FPL prior to crossing any underground or overhead electric line to verify voltage and locations of existing lines.

I. Contractor shall secure and/or verify existence of all utility easements prior to construction as required.

J. Contractor shall be responsible for obtaining all necessary dewatering permits along with all costs associated with the dewatering permits.

K. Location of existing facilities as shown on construction drawings are drawn from available records. The engineer assumes no responsibility for the accuracy of the facilities shown or for any facility not shown. Contractor shall verify the elevations and locations of existing facilities prior to construction. If upon excavation, an existing facility is found to conflict with the proposed construction, the contractor shall immediately notify the engineer of record so that appropriate measures can be taken to resolve the conflict.

L. At least two (2) days prior to the start of construction, the contractor shall submit a CGP "Notice of Intent (N.O.I.) to Use Generic Permit for Stormwater Discharge From Construction Activities That Disturb Five or More Acres of Land" form (DEP 62-621.300(4)(b) to FDEP notices center. The Contractor will be responsible for 1) Preparation and implementation of the Stormwater Pollution Prevention Plan (SWPPP), 2)Retention of records as required by the permit, 3)Submittal of Notice of Termination (N.O.T.) form (DEP Form 62-621.300(6)).

M. Contractor shall be responsible for obtaining all necessary dewatering permits along with all costs associated with the dewatering permits.

III. INSPECTIONS

A. The Contractor shall notify the jurisdictional agencies and the Engineer of Record at least 48 hours prior to beginning construction and prior to any inspections.

B. All inspections will be made by the City of Hallandale. The Engineer of Record will provide construction observation service.

IV. SHOP DRAWINGS

A. Prior to their construction or installation, shop drawings shall be submitted to and reviewed by the Engineer of Record for sanitary manholes, catch basins, storm manholes, fire hydrants, valves and other accessories. Catalogue literature shall be submitted for water and sewer pipes, fittings, and appurtenances.

B. Prior to submitting shop drawings to the Engineer, the Contractor shall review and approve the drawings, and shall note in red any deviations from the Engineer's plans or specifications.

C. Individual shop drawings for all precast structures are required. Catalogue literature will not be accepted for precast structures.

V. TEMPORARY FACILITIES

A. TEMPORARY UTILITIES

It shall be the Contractor's responsibility to arrange for or supply temporary water service, sanitary facilities and electricity to its employees and subcontractors for their use during construction.

B. TRAFFIC REGULATION

1. Maintenance of traffic in the public right-of-way shall be in accordance with the MUTCD and approved by BCTED. Contractor shall utilize extreme caution in maintaining traffic for all port activities.
2. All open trenches and holes adjacent to roadways or walkways shall be properly marked and barricaded to assure the safety of both vehicular and pedestrian traffic.
3. No trenches or holes near walkways or in roadways or their shoulders are to be left open during nighttime hours without express permission of the City of Fort Lauderdale and applicable jurisdictional agencies.
4. All maintenance of traffic shall be provided in such a manner as to not interfere with Port business operations. Adequate signage, lane widths and turn lanes must be provided to ensure safe and efficient vehicle and truck access in and around the project.

VI. PROJECT CLOSEOUT

A. CLEANING UP

1. During construction, the project site and all adjacent areas shall be maintained in a neat and clean manner. Upon final clean up, the project site shall be left clear of all surplus material or trash. The paved areas shall be swept broom clean.
2. The Contractor shall restore or replace, when and as directed by the Engineer or City of Hallandale Beach, any public or private property damaged by its work, equipment, employees or those of its subcontractors to a condition at least equal or better to the existing condition immediately prior to the beginning of operations. To this end, the Contractor shall do all necessary highway or driveway, walk and landscaping work. Suitable materials and methods shall be used for such restoration.
3. Where material or debris has washed or flowed into or been placed in water courses, ditches, drains, catch basins, or elsewhere as a result of the Contractor's operations, such material or debris shall be removed and satisfactorily disposed of during progress of the work, and the area kept in a clean and neat condition.
4. When working in and around existing drainage canals, appropriate silt barriers shall be installed as required by surface water management division and the SWPPP.
5. All property monuments or permanent references removed or destroyed by the Contractor during construction shall be restored by a State of Florida registered professional surveyor and mapper at the Contractor's expense.

B. PROJECT RECORD DOCUMENTS

1. The Contractor shall maintain accurate and complete records of work items completed.
2. During the daily progress of the job, the contractor shall record on his set of construction drawings the exact location, length, and elevation of any facility not built exactly according to plans. The Contractor shall keep a record drawing of the constructed length, width and depth of all exfiltration trench.
3. Upon completion of drainage improvements and limerock base construction (and before placement of pavement) the contractor shall furnish the engineer of record "as-built" plans for these improvements, showing the locations and pertinent grades of all drainage installations and the finished rock grades at every location where a design elevation is shown on the design drawings, at road crown or inverted road crown, at edges of pavement at 50 foot intervals, swale elevations and flow lines, intersections and breaks in grade. These as-builts shall be signed and sealed by a Florida P.S.M.
4. All required density and LBR test results for sub-grade shall be provided to the Engineer prior to placing limerock base material.
5. All required density and LBR test results for limerock shall be provided to the Engineer prior to placing asphalt.
6. All "as-built" information submitted to the Engineer shall be sufficiently accurate, clear and legible to satisfy the Engineer that the information provides a true representation of the improvements constructed.
7. Upon completion of construction, the Contractor shall submit to the Engineer of Record complete sets of "as-built" construction drawings as required for submittal and approval. These drawings shall be marked to show "as-built" construction changes and dimensioned locations and elevations of all improvements and shall be signed and sealed by a registered land surveyor.
8. All "as-built" information on elevations of water, paving, and drainage shall be certified by a registered land surveyor.
9. As-built information on the water system shall include depth and locations of all valves, fittings, fire hydrants, water services and top of pipe elevations at all fittings and at a minimum of 100' spacing.

VII. EARTHWORK

A. GENERAL

1. All trees, brush, roots, grass, weeds and all other obstructions shall be removed from within the project limits of the paved areas.
2. All unsuitable material shall be removed under all new drainage and utility lines, under all new exfiltration trench and under all new drainage and utility structures.
3. Structural fill should consist of inorganic, non-plastic, granular soils containing less than 10% material passing the #200 sieve (GP, GW, SP, GW-GM, SW-SM, or SP-SM or crushed lime rock with a 3" maximum particle size). Backfill material placed in lifts not to exceed twelve (12) inches in thickness and compacted to a minimum density of 98% of AASHTO T-180 (modified Proctor). If the excavation extends below the ground water level, the excavation should be dewatered prior to stripping and site preparation. The dewatering operation should be a wellpoint operation and should operate continuously until the fill has been brought to at least two (2) feet above the original ground water level. Prior to initiating compaction, representative samples of the fill materials to be used, as well as acceptable exposed in-place soils shall be collected and tested to determine their compaction and classification characteristics.
4. A representative number of in-place field density tests should be performed in the compacted existing soils and in each 1' lift of fill material or backfill to confirm that the required degree of compaction has been achieved. At least one density test shall be performed for every 2000 square feet of compacted existing soil, subgrade, and each lift of controlled fill.
5. Any deep excavations or trenches required for this project should be adequately shored to prevent the sandy soils from collapsing into the excavations. All applicable OSHA Standards and Regulations should be adhered to for the safety of the requirements of the Florida Trench Safety Act of 1990.

B. ON-SITE

1. None of the existing material is to be incorporated in the limerock base.
2. All sub-grade under paved areas shall be 12" thick (unless otherwise shown on the plans) and have a minimum LBR value of 40 and shall be compacted to 98% of the maximum density as determined by AASHTO T-180.
3. All fill material in areas not to be paved shall be compacted to 95% of the maximum density as determined by AASHTO T-180.
4. When working in and around existing drainage canals, lakes or other water bodies, appropriate silt barriers shall be installed.
5. All organic and other unsuitable material under those areas to be paved shall be removed to a depth of three (3) feet below finished grade and for three (3) feet beyond the perimeter of the paving.
6. Suitable backfill shall be minimum LBR 40 material compacted to 98% of the maximum density as determined by AASHTO T-180 three (3) feet beyond the perimeter of the paving.

VIII. STORM DRAINAGE

A. MATERIALS

1. Concrete pipe for storm sewers shall conform to ASTM C76-79, Table III, Wall B, or latest revision. All pipes shall have modified tongue and groove joints, and have rubber gaskets, unless otherwise specified.

B. MISCELLANEOUS

1. Bedding and initial backfill over drainage pipe shall be sand with no rock larger than 1" diameter.
2. Backfill material under paved areas shall be compacted to 98% of the maximum density as determined by AASHTO T-180.
3. Backfill material under areas not to be paved shall be compacted to 95% of the maximum density as determined by AASHTO T-180.
4. Drainage structures shall be precast with 4000 psi concrete at 28 days and grade 40 reinforcing steel. The minimum wall thickness shall be 8" thick and the reinforcing shall be No. 4 bars at 12 inches each way unless otherwise indicated.
5. Drainage structures to be cleaned prior to city and Port Everglades acceptance.

C. INSTALLATION

1. Storm structure grates and covers shall be adjusted to conform to new or existing grades.
2. Distances and lengths shown on plans are referenced to the center of structures.
3. Pipe shall be placed on stable granular material free of formation, other foreign formations and constructed to uniform grade line.
4. Backfill material shall be well graded granular material well tampered in layers not to exceed six (6) inches.
5. Provide a minimum protective cover of 18 inches over storm sewer and avoid unnecessary crossing by heavy traffic vehicles during construction.
6. The Contractor shall notify the jurisdictional agencies at least seven (7) days prior to the start of construction and inspection.

IX. PAVING

A. GENERAL

1. All underground utilities shall be completed and inspected prior to the construction of the limerock base and prior to the placement of the pavement.
2. All existing pavement cuts or damage due to construction shall be properly restored at the Contractor's expense.
3. Where proposed pavement is to be connected to existing pavement, the existing edge of pavement shall be sawcut in a straight and neat fashion.
4. Upon completion of drainage improvements and limerock base construction (and before placing asphalt pavement) the Contractor shall furnish the Engineer of Record, and all agencies having jurisdiction "as-built" plans for these improvements. These "as-builts" shall be approved by the Engineer / City prior to placement of the asphalt.
5. The Contractor shall perform a rolling straightedge test prior to milling operations to identify existing conditions that may not pass the longitudinal or cross slope grades for final lift asphalt. In non-conforming areas, the Contractor shall remove the existing pavement in a manner that will restore the pavement surface to a uniform cross-section ad longitudinal profile. Contractor shall perform a rolling straightedge test after placement of final lift asphalt to confirm the corrections identified in the initial straightedge test. Refer to FDOT Standard Specification Section 327 for additional requirements for milling of existing asphalt pavement.

B. MATERIALS

1. Base course shall be crushed limerock Miami Oolite with a minimum of 70% carbonates of calcium and magnesium (60% for parking areas) the liquid limit shall not exceed 35 and the material shall be non-plastic. At least 97% by weight of the material shall pass a 3-1/2 inch sieve and the material shall be uniformly graded down to dust, and a minimum limerock bearing ratio of 100. Base courseS shall be 8 inches.
2. Prime coat shall be applied at the rate of 0.25 gal/yd sq. and tack coat shall meet Florida Department of Transportation (FDOT) Standards.
3. Surface course shall be equal to FDOT Type SP STRUCTURAL COURSE (PG 76-22 BINDER) Asphaltic concrete per 2010 FDOT specifications unless otherwise specified on the plans as shown in details. Asphaltic concrete shall be 2" minimum.
4. Reinforced concrete slabs shall be constructed of ClassI concrete with a minimum strength of 4000 psi and shall be reinforced with a 6" x 6" no. 6 gauge wire mesh and other steel reinforcements as shown in the civil details. See structural drawing for structural concrete slabs details for more information.

C. INSTALLATION

1. Limerock base material shall be 8" thick and compacted to 98% of the maximum density as determined by AASHTO T-180.
2. Limerock base material shall be placed in maximum 6" lifts. Bases greater than 6" shall be placed in two or more equal lifts. Limerock base shall be compacted to 98% of the maximum density as determined by AASHTO T-180.
3. Asphaltic concrete shall be a minimum of 2 inches thick and shall be placed in two 1" lifts.
4. Prime coat shall be placed on all limerock bases in accordance with FDOT Standards.
5. Tack coat shall be placed as required in accordance with FDOT Standards.

D. TESTING

1. All sub-grade, limerock and asphalt tests required shall be taken at the direction of the Engineer.
2. The finished surface of the base course and that of the wearing surface shall not vary more than ¼" from the template. Any irregularities exceeding this limit shall be corrected.
3. Density tests shall be taken by an independent testing laboratory, certified by the state of Florida, and taken as directed by the engineer.
4. All testing costs (paving) shall be paid for by the owner except those tests failing to meet the specified requirements, which are to be paid by the contractor.

X. SIGNING AND MARKING

A. All pavement marking shall be hot applied thermoplastic manufactured and applied in accordance with FDOT Standard Specification Section 711.

B. All signs shall be manufactured and installed in accordance with the Manual on Uniform Traffic Control Devices.

C. Reflective pavement markers shall be Class B Markers manufactured in accordance with FDOT Standard Specification 706 and installed in accordance with the manufacturer's recommended procedures.

XI. WATER DISTRIBUTION SYSTEM

A. GENERAL

1. The Contractor shall notify the City of Hallandale Beach and the Engineer of Record no later than 48 hours prior to making connections to existing systems.
2. All materials and products shall conform to the latest Broward County Water and Wastewater Services (WWS) Minimum Requirements and Product Specification Sheets
3. All water main piping traversing through areas where contamination is discovered shall have all joints restrained and utilize nitrile gaskets in lieu of rubber gaskets. Please refer to demolition plans for exact locations.
4. Separation of Water Mains and other mains
   a. Parallel water and sewer mains shall have a minimum 10' horizontal separation. Where this is not possible, the sewer main shall be in a separate trench and be at least 18" below the water main.
   b. Sanitary sewers, storm sewers and force mains shall cross below all water mains with a minimum of 18" vertical clearance. Where the clearance is less than 18", the sewer main and the water main shall be Ductile Iron Pipe (DIP) for 20', centered on the point of crossing. All joints on the water main within 20 feet of the crossing shall be mechanically restrained.
   c. All crossings shall be arranged so that the sewer pipe joints and the water main pipe joints are equidistant from the point of crossing (pipes centered on the crossing).
   d. A water main must cross above any type of sewer, a minimum vertical clearance shall be 12".
   e. Where i it is not possible to maintain a vertical distance of 18 inches in parallel installations, the water main shall be constructed of DIP and the sanitary sewer or force main shall be constructed of DIP with a minimum vertical distance of 6 inches. The water main should always be above the sewer. The joints on the water main shall be located as far as possible from joints on the sewer or force main (staggered joints).
5. Contractor shall maintain water service to all existing facilities during construction.
6. All materials and products shall conform to Broward County Water and Wastewater Services (WWS) minimum requirements and product specification sheets. WWS product specification sheets, latest editions, shall take precedence over the materials specified below.

B. MATERIALS

1. PIPE
   a. All pipe, fittings, and specials intended for conveying or transmitting service of treated water shall be designed for a minimum working pressure per WWS requirements.
   b. All pipe larger than 12" diameter must be ductile iron pipe (DIP) (minimun class 50). 8" and 10" DIP (Min class 50) 4" and 6" DIP (minimum class 52). All ductile iron pipe shall conform to the requirements of ANSI/AWWA C151/A21.51-02 and cement mortar lined and seal coated per ANSI/AWWA C104/A21.4-03. see Broward County WWS latest standards & specifications for further D.I.P. requirements.
   c. Pipe joints shall be mechanical, conforming to AWWA C-111-00.
   d. All gaskets shall be **Nitrile Gaskets**. Where required polyethylene wrap shall be installed.
   e. D.I.P. shall not be deflected more than 1/2 the recommendation.
   f. All water main installation shall comply with the color coding requirements of Chapter 65-555.320 F.A.C.
2. FITTINGS
   a. Cast iron and ductile iron fittings, shall be compact ductile iron mechanical joint type and shall be class 350 through 24" conforming to ANSI/AWWA C-153/A21.53-00 specifications. Fittings must be cement lined and seal coated per ANSI/AWWA C104/A21.4-03.
   b. PVC fittings shall be of monolithic construction and of the type specified by the manufacturer of the pipe being used. No solvent welds will be permitted.
3. JOINTS
   a. Joints for bell and spigot ductile iron pipe shall conform to ANSI/AWWA standard C111/A21.11-00 latest revision. Mechanical joint or push-on joint to be rubber gasket compression type. Special fittings shall be considered for specific installation subject to the approval of the engineer. Retainer glands shall conform to ANSI/AWWA C111/A21.11-00 or latest revision.All glands shall be manufactured from ductile iron as listed by underwriters laboratories for 250 psi minimum water pressure rating. Retainer glands shall be per WWS minimum standards.
   b. Mechanical restraint must be provided on all mains in lieu of thrust blocks at all tees, hydrants, and changes in direction, unless it is demonstrated that such restraint cannot be accomplished or would be undesirable.
4. RESILIENT SEAT VALVES 4" THRU 10"
   a. Resilient seat valves shall comply with AWWA Standard C-509-01 latest revisions, Broward County WWS latest standards and shall have the following design standards.
   b. All resilient seat valves are to be iron body, resilient seat type non-rising stem, opening left (counter clockwise). Valves shall be furnished with "O" ring packing (two "O" rings). The operating mechanism shall be for buried service with a 2-inch square opening nut.
   c. Valve disc shall be contoured to assure uniform seating.
   d. Valves shall be coated with a two-part thermosetting epoxy coating on inside of valve body and on valve disc or as approved by the City. The type of end connection shall be determined by the type of pipe used.
   e. Resilient seat valves shall have a maximum working pressure of 200 psi and be tested at 400 psi between disc seat being and body seating surface. Seat ring seals shall be replaceable and made from internally reinforced molded natural rubber (ASTM D2000). Seat ring shall be attached to disc with stainless steel screws.
   e. No leakage will be allowed.
5. TAPPING SLEEVES AND VALVES
   a. Steel tapping sleeves shall have a welded steel body with flat faced steel flange, recessed for a tapping valve, in accordance with MSS Standard S.P.-60. Gaskets shall be neoprene "O" ring type with some type of gasket restraint incorporated in the sleeve. Test plug shall be provided on the outlet throat.
   b. Cast iron tapping sleeves shall be of the mechanical joint type having a flat faced cast iron flange, recessed for a tapping valve. All end and side gaskets shall be totally confined. The throat section of tapping sleeves through 12" size shall conform to MSS standard s.p.-60. Test plug shall be provided on the outlet throat.
   c. Tapping valves 4" and larger shall comply with AWWA standard c-509-01 latest revision and shall have the following design standards plus the valve port shall be free and full to allow passage without interference.
   d. All tapping valves are to be iron body, bronze mounted, double disc, non-rising stem, parallel seat type, opening left (counter clockwise). Non-geared valves shall be furnished with "o" ring packing (two "O" rings). The operating mechanism shall be for buried service with a 2-inch square operating nut.
   e. The disc mechanism shall be designed so that the seating pressure is applied equally at four separate contact points near the outer edge of each disc or in the case of fully revolving disc valves, the shall be accomplished by two flat rectangular contact strips producing an equivalent effect, the upper contact strip shall be faced with stainless steel.
   f. The type of end connection shall be determined where approved by the engineer.
   g. Tapping valves 4" - 12" shall have a maximum working pressure of 200 psi and be tested at 400 psi. Valves 16" - 48" shall have a maximum working pressure of 150 psi and be tested at 300 psi.
6. FIRE HYDRANTS
   a. Fire hydrants shall be per WWW minimum standards. main valve opening to be determined by the water department. pumper nozzle to be 18" from finished grade. All hydrants to be installed with control valve. Retainer glands are preferred for restraining. fire hydrant shall comply with ansi/awwa c502-05. see broward county water and wastewater construction standards & specifications for additional requirements.
   b. Raised reflective pavement marker in blue shall be used to identify the fire hydrant location. The placement of the reflector to be at the center line of the outside roadway lane unless otherwise directed by the Fire Marshall or local fire department having jurisdiction.
   c. Bollards shall be placed around hydrant as applicable and in accordance with the standard detail and WWS latest standards.
7. TRACING WIRE
   a. Tracing wire shall be installed with PVC pressure pipe to insure that the pipe can be located after burial. A 14 gauge multi strand copper wire shall be installed continuously along the length of the pipe. A green wire shall be used for sewer mains and a blue wire shall be used for water mains. The wire shall be brought up and a minimum of four feet of excess wire shall be coiled at each valve. A blue locator shall be installed at every water service as manufactured by automation products co., model #1253 or approved equal.
   b. Tracing wire requirements may be waived by the Engineer.
8. THRUST RESTRAINT
   a. All bends, tees, crosses, reducers, and dead ends shall be restrained through an approved means of mechanical joint restraint using Megalugs and all thread rods. All branch valves shall be restrained with Megalugs and all thread rods. Any line terminated as a construction phase that is a known future extension, shall have plugged valve at the end and restrained with Megalugs and all thread rods.
   b. All bends, tees, crosses, reducers, and dead ends for 16" diameter pipe and larger shall have mechanical joints with Megalugs and all thread rods or approved equal for restraint in lieu of thrust blocks.
9. POLYETHYLENE TUBING
   a. The polyethylene compound from which the tubing is made shall be an ethylene hexene copolymer and shall comply with the applicable requirements as specified in ASTM d3350 providing a cell classification of 355434C and simultaneously be as specified in ASTM d1248 for type 111 Category 5, Grade P34, Class C, PE3408 very high molecular weight, high density polyethylene plastic material.
   b. Polyethylene shall comply with the following:
      1. Tubing shall have a working pressure at 250 psi.
      2. All tubing furnished under these specifications shall conform to the following standards: AWWA C-901-02, ASTM D2239, ASTM D2737, ASTM D3350, ASTM D1248, ASTM F1248, ASTM D1693, ASTM D2837 and ASTM D3140.
      3. Tubing dimensions and tolerances shall conform to the following requirements:
      4. Polyethylene tubing surfaces shall be mirror smooth, and shall be free from bumps and irregularities. Materials must be completely homogenous and uniform in appearance.
      5. Tubing dimensions and tolerances shall correspond with the values listed in AWWA C901-96 with a dimension ration (DR) of 9.
      6. Tubing shall be fully labeled at intervals of not more than 5 feet with brand name and manufacturer, the nominal size, PE 3408, the word "tubing" and DR9, PC200, AWWA C901-02, and the seal, or mark, of the testing agency.
10. CASING PIPE
   a. Casing pipe for water services shall be SCH 40 per ANSI/AWWA.
   b. Casing ends shall be sanded smooth and sealed using acceptable methods used in the industry.
   c. Casing size to be a minimum of 150% of the tubing diameter.
11. METER VALVES/CURB STOPS
   a. Meter valves shall be of bronze construction in accordance with ASTM Specification B62 latest revision.
   b. Meter valves shall be closed bottom design and resilient "O" ring sealed against external leakage at the top. Shut-off shall be affected by a resilient pressure actuated position. The inlet side of all meter valves shall have a compression type fitting as specified in section c. Meter valves for meter sizes 1 ½" and under shall be equipped with a meter coupling nut on the outlet sides.
   c. Meter valves for 1 ½" and 2" meters shall have flanged connections on the outlet sides. Meter valves over 2" will be considered on individual basis for the particular installation involved.
   d. Meter valves 2" or less shall be all type.
   e. Curb stops shall be of the ball valve type. These valves shall be of cast red brass containing copper, tin, lead and zinc. The ball shall be teflon coated brass and shall be held in position by and seal off against seats of buna n rubber that are held securely in place with epoxy adhesive. Valves shall be water tight against flow in either direction. The waterways shall be no smaller than the normal size of the valve and shall be smooth, with no abrupt changes in size to create resistance to flow. The stem that turns the ball shall exert no other forces on it except to open or close the ball and shall be held securely in place by means of a bronze ring. The minimum diameter of the stem at the point of attachment to the valve body shall be as follows:

VALVE SIZE	MINIMUM DIAMETER
1"	11/16"
1 - ¼"	7/8"
1 - ½"	7/8"
2"	1"

12. CORPORATION STOPS
   a. Corporation stops shall be manufactured of brass alloy in accordance with ASTM specification B62 latest revision. These corporation stops shall be of the ball valve type.
   b. Inlet thread shall be AWWA iron pipe thread in all sizes in accordance with AWWA. Outle connections shall have a compression type fitting.
13. SERVICE SADDLES
   a. Service saddles shall be bronze ASTM A536, which tighten to conform to the curvature for the pipe sealing "O" ring gasket confined in a retaining groove, for pressure tight seal on the main.
   b. Service saddles shall be ford meter box - double 202B or approved equal.
14. WATER METERS
   a. Meters 2" and smaller will be installed by the utility.
   b. Meters over 2" in size shall be provided by the developer. All meters furnished shall be manufactured in the continental United States and shall conform to ANSI/AWWA standard c701-88.
   c. Maincases for all sizes shall be cast water works bronze. Size, model and direction of flow shall be cast, in raised characters, on both sides of the Maincase.
   d. The measuring chamber shall be of unitized construction (i.e. complete with measuring element, calibration device and register in one assembly). The measuring chamber shall be capable of operation within above listed accuracy limits without recalibration when transferred from one Maincase to another of similar size. The measuring element shall be mounted on a horizontal stationary shaft with sleeve beaming and be essentially weightless in water.
   e. The register shall be permanently hermetically sealed; all registers of similar size and registration to have a standard ratio gear reduction so as to permit interchangeability. The measuring chamber is removed from the Maincase. Sweep hand reading and odometer wheel details will conform to American Water Works Standard C-701-88, as most recently revised.
   f. The register must be of the straight reading type and have a test dial. It shall read in us gallons and be capable of direct visual reading both at the meter and by remote reading external to the meter. All reduction gearing shall be contained in a permanently hermetically sealed, tamper-proof enclosure made of a corrosion resistant material. The register is to be secured to the upper Maincase by means of an internal locking device so that the register cannot be removed by the utility customer.

C. INSTALLATION

1. GENERAL

Connection of all new systems to existing mains shall be done using one of the three following methods:

   a. Method A per Broward County Public Health Unit Standards which involves a reduced size temporary connection between the existing main and the new main.
   b. Method B per Broward County Public Health Unit Standards which involves a direct connection between the new and existing mains using two gate valves separated by a sleeve with a vent pipe.
   c. Method C approved by the Broward County Public Health Unit which involves a tap with one gate valve requiring disinfection of the new system prior to conducting the pressure test.

2. DUCTILE IRON PIPE
   a. DIP shall be installed in accordance with ANSI/AWWA C 600-05.
   b. DIP shall be installed with a minimum of 30" cover.
3. VALVES
   a. All valves shall be installed with adjustable cast iron valve boxes with the word "WATER" cast in the cover.
   b. Main valves shall be located on an extension of the right-of-way line unless dimensioned otherwise.

D. TESTING

1. The physical connection of the new system to the existing system shall be done in accordance with Section C.1. above-which will dictate the order of the pressure testing and disinfection.
2. The complete water system shall be pressure tested and disinfected. The pressure test shall be for two hours at 150 psi minimum starting test pressure in accordance with ANSI/AWWA C 600-05. The pressure test shall not vary more than 5+/- psi during the test.
3. Hydrostatic Tests:
   a. After a new water main has been laid and backfilled, it shall be pumped to a pressure of 150 psi and all visible leaks stopped by approved methods.
   b. A leakage test shall then be conducted at the above mentioned pressure and no installation will be acceptable by the city until the leakage is less than the number of gallons per hour as determined by the formula:

$$L = \frac{S \times D \times P^{1/2}}{148{,}000}$$

In which
L = allowable leakage in GPH
S = length of line in feet being tested in FT
D = nominal diameter of the pipe in inches
P = the average test pressure during the leakage test in PSI

The test is usually maintained for two hours but it may be continued for one additional hour if it becomes apparent that the leakage is equal to or greater than the amount allowable. Water supplied to the main during the test to maintain the required pressure shall be measured by a 5/8-inch meter installed on the discharge side of the test pump, or by pumping from a calibrated container. A hose bib connection will be provided to accept the test gauge.

   c. The section of main being tested shall be limited to a maximum length of 2000'. When testing against closed metal-seated mainline valves, an additional leakage per closed valve of 0.0078 gal/hr/in of nominal valve size shall be allowed. Any questions pertaining to procedures used during the test shall be decided by the city.
   d. No allowable leakage for fire hydrants.
4. The pressure test shall be witnessed by a representative of the City of Hallandale Beach and the Engineer of Record.
5. Before acceptance for operation, the water system shall be disinfected in accordance with ANSI/AWWA C 651-05 with bacteriological samples approved by the County Health Department. Collection of samples is the Contractor's responsibility and will be witnessed by a City of Hallandale Beach representative.
6. Bacteriological Test:
   a. After the water mains have been flushed through openings of the required size, the water mains must satisfy the leakage requirements as detailed in ASNI/AWWA standard C651-99 latest revision. The main shall then be sterilized in accordance with the provisions of the applicable sections of the above named specifications. On main breaks, cut-ins, etc. a liberal application of calcium hypochlorite shall be made; 50 ppm chlorine during a 24 hour period.
   b. Mains shall not be put into domestic service until the necessary bacteriological samples have been approved by the applicable regulatory agencies.

XII. GRAVITY SEWAGE COLLECTION SYSTEM

A. MATERIALS

1. SEWER PIPE AND FITTINGS
   a. Existing Sanitary sewer lateral to be used to service proposed building. Location and size to be field verified.

SUBMITTED FOR APPROVAL
03-01-2018

NO.	REVISION	DATE

FOR BLDG DEPT PERMIT

DAVID POSNACK JEWISH DAY SCHOOL
412 SW 11TH STREET, HALLANDALE BEACH, FL 33009
FOR: DP JDS

SUITE 01, 02/20/2018 8:42:32 PM

CORDOVA RODRIGUEZ & ASSOCIATES INC.
ENGINEERS - PLANNERS
AUTHORIZATION No. 8659
CORDOVA RODRIGUEZ & ASSOCIATES, INC.
6941 SW 196TH AVENUE, SUITE 28
PEMBROKE PINES, FLORIDA 33332
TEL: (954) 880-0180
FAX: (954) 880-0188
WWW.CRAENGINEERING.COM

ROSANA D. CORDOVA, P.E.
LICENSED ENGINEER
FL LICENSED P.E. No. 41864
DATE:

LUIS E. RODRIGUEZ, P.E.
LICENSED ENGINEER
FL LICENSED P.E. No. 54287
DATE:

SPECIFICATIONS

DESIGN: LER | CHECKED: RDC

SCALE: NTS

DATE: 03-01-2018

PROJECT NO. 16-199.01

SHT 10 OF 10

DWG NO. C-501

C-501

\\Cra-2016-01-1\Projects\Engineering\2016 Projects\2016-Projects.dwg