W Hallandale SHOPPES

Hallandale Beach, Florida, 33009

LEGAL DESCRIPTION

LOT 7 LESS THE NORTH 25 FEET, BLOCK 1 OF BENNET PIPES FIRST ADDITION TO TOWN OF HALLANDALE, ACCORDING TO THE PLAT THEREOF, AS RECORDED IN PLAT BOOK 18, PAGE 5, OF THE PUBLIC RECORDS OF BROWARD COUNTY, FLORIDA, ID#5142-28-12-0040
LOT 8 LESS THE NORTH 25 FEET, BLOCK 1 OF BENNET PIPES FIRST ADDITION TO TOWN OF HALLANDALE, ACCORDING TO THE PLAT THEREOF, AS RECORDED IN PLAT BOOK 18, PAGE 5, OF THE PUBLIC RECORDS OF BROWARD COUNTY, FLORIDA, ID#5142-28-12-0041
LOT 9 LESS THE NORTH 25 FEET, BLOCK 1 OF BENNET PIPES FIRST ADDITION TO TOWN OF HALLANDALE, ACCORDING TO THE PLAT THEREOF, AS RECORDED IN PLAT BOOK 18, PAGE 5, OF THE PUBLIC RECORDS OF BROWARD COUNTY, FLORIDA, ID#5142-28-12-0050
LOT 10 LESS THE NORTH 25 FEET, BLOCK 1 OF BENNET PIPES FIRST ADDITION TO TOWN OF HALLANDALE, ACCORDING TO THE PLAT THEREOF, AS RECORDED IN PLAT BOOK 18, PAGE 5, OF THE PUBLIC RECORDS OF BROWARD COUNTY, FLORIDA, ID#5142-28-12-0060
LOTS 17 AND 18, BLOCK 1 OF BENNETT-PIPES FIRST ADDITION TO TOWN OF HALLANDALE, ACCORDING TO THE PLAT THEREOF, AS RECORDED IN PLAT BOOK 18, PAGE 5, OF THE PUBLIC RECORDS OF BROWARD COUNTY, FLORIDA, ID#5142-28-12-0110
LOT 20 BLOCK 1, OF BENNET PIPES FIRST ADDITION TO TOWN OF HALLANDALE, ACCORDING TO THE PLAT THEREOF, AS RECORDED IN PLAT BOOK 18, PAGE 5, OF THE PUBLIC RECORDS OF BROWARD COUNTY, FLORIDA, ID#5142-28-12-0121
LOT 19, BLOCK 1 OF BENNET PIPES FIRST ADDITION TO TOWN OF HALLANDALE, ACCORDING TO THE PLAT THEREOF, AS RECORDED IN PLAT BOOK 18, PAGE 5, OF THE PUBLIC RECORDS OF BROWARD COUNTY, FLORIDA, ID#5142-28-12-0120

PROPERTY ADDRESS

613 - 625 WEST HALLANDALE BEACH BLVD.
HALLANDALE BEACH, FL 33009

JURISDICTION:

CITY OF HALLANDALE BEACH
BROWARD COUNTY
STATE OF FLORIDA

BUILDING CODES:

FLORIDA BUILDING CODE 2017 6th EDITION
NFPA 1, NFPA 101, LIFE SAFETY CODE, 2018 EDITION
FIRE CODE, 2018 EDITION
CITY OF HOLLYWOOD ZONING CODE

SITE INFORMATION

- EXISTING ZONING:	B/-G (BUSINESS GENERAL)	
- LAND USE DESIGNATION:	RDO (REDEVELOPMENT OVERLAY)	
- CURRENT USE:	VACANT / SINGLE FAMILY RESIDENTIAL	
- PROPOSED USE:	COMMERCIAL-RETAIL	
- LOT AREA:	45,000 S.F. (1.03 ACRES)	
- ADJACENT ZONING:	NORTH____________	B-G (BUSINESS GENERAL)
	EAST______________	B-G (BUSINESS GENERAL)
	SOUTH____________	RS-7 (RESIDENTIAL SINGLE FAMILY)
	WEST_____________	B-G (BUSINESS GENERAL)
- FEMA FLOOD HAZARD:	ZONE-X (0.2% ANNUAL CHANCE OF FLOOD HAZARD)	

- SETBACKS:	REQUIRED	PROVIDED
(a) FRONT (HALLANDALE BEACH BLVD)	15'-0" MIN	10'-1" (MONUMENT SIGN) - 10'-6" (BUILDING)
(b) SIDE INTERIOR (WEST)	0'-0"	3'-8" (TO MONUMENT SIGN)
(c) SIDE INTERIOR (EAST)	0'-0"	5'-9" (BUILDING) - 1" (PL WALL)
(d) REAR (S.W. 1ST STREET)	25'-0"	28'-6"
- PARKING:	REQUIRED	PROVIDED
RETAIL (1:300 S.F.)	12,096 S.F./ 300= 40 SPACES	43 SPACES TOTAL 41 SPACES (INCL. 2 ADA) (+2 TEMP. SPACES @ F.D.O.T. CROSS ACCESS EASEMENT)
- LOADING:		
COMMERCIAL	2 SPACES	1 SPACE (VARIANCE REQUESTED)
- PERVIOUS		
COMMERCIAL	15% (MIN) OR 6,750 S.F.	LANDSCAPE________ 7,122 S.F. OR 16%

VARIANCES

SETBACKS	REQUIRED	PROVIDED
(A) FRONT SETBACK (BISCAYNE)	15'-0" MAX	10'-1" (MONUMENT SIGN) - 10'-6" (BUILDING)
(B) LOADING AREA	2	1

1 PROJECT INFORMATION

OWNER:
REUBEN EZEKIEL
801 S UNIVERSITY DRIVE
PLANTATION, FL 33324
PH: 954-4742019

ARCHITECT:
KALLER ARCHITECTURE
JOSEPH B. KALLER, AP, AIA, LEED
2417 HOLLYWOOD BLVD
HOLLYWOOD, FLORIDA 33020
PH: 954.920.5746
FX: 954.926.2841

SURVEYOR:
ACCURATE LAND SURVEYORS, INC
1150 E ATLANTIC BLVD
POMPANO BEACH, FLORIDA 33060
PH: 954-782-1441

CIVIL ENGINEER:
GGB ENGINEERING, INC
GARY BLOOM
2699 STIRLING RD, SUITE C-202
FORT LAUDERDALE, FL, 33312
PH: 954-986-9899

LANDSCAPE ARCHITECT:
TONNING AND ASSOCIATES, INC
4855 NW 92 TERRACE
CORAL SPRINGS, FL, 33067
PH: 561-414-8269

2 PROJECT TEAM

T-1.0 COVER SHEET/ LOCATION MAP/ PROJECT INFO

SITE:

SU-1 SURVEY
SPD-1 SITE PLAN - DEMOLITION
SP-1.0 NEW SITE PLAN
SP-2.0 SITE DETAILS
SP-2.1 SITE DETAILS
SPH-1 SITE LIGHTING & PHOTOMETRICS

LANDSCAPING:

LI-1 IRRIGATION PLAN
LP-1 LANDSCAPE PLAN

CIVIL:

C-1 PAVING/ GRADING AND DRAINAGE PLAN
C-1A PAVEMENT MARKINGS AND SIGNAGE PLAN
C-2 WATER AND SEWER PLAN
C-3 GENERAL NOTES AND CONSTRUCTION DETAILS
C-4 CONSTRUCTION DETAILS
C-5 CONSTRUCTION DETAILS
C-6 CONSTRUCTION DETAILS
C-7 CONSTRUCTION DETAILS
C-8 STORMWATER POLLUTION PREVENTION PLAN
C-9 STORMWATER POLLUTION PREVENTION NOTES

ARCHITECTURAL:

A.1-0 NEW FLOOR PLAN
A.2-0 NEW ROOF PLAN
A-3.0 NORTH & EAST ELEVATION
A-4.0 SOUTH & WEST ELEVATION
A-5.0 BUILDING SECTIONS
A-6.0 CONCEPTUAL RENDERINGS

STRUCTURAL ENGINEERING:
tbd

MECHANICAL ENGINEERING:
tbd

ELECTRICAL ENGINEERING:
tbd

PLUMBING ENGINEERING:
tbd

3 DRAWING INDEX

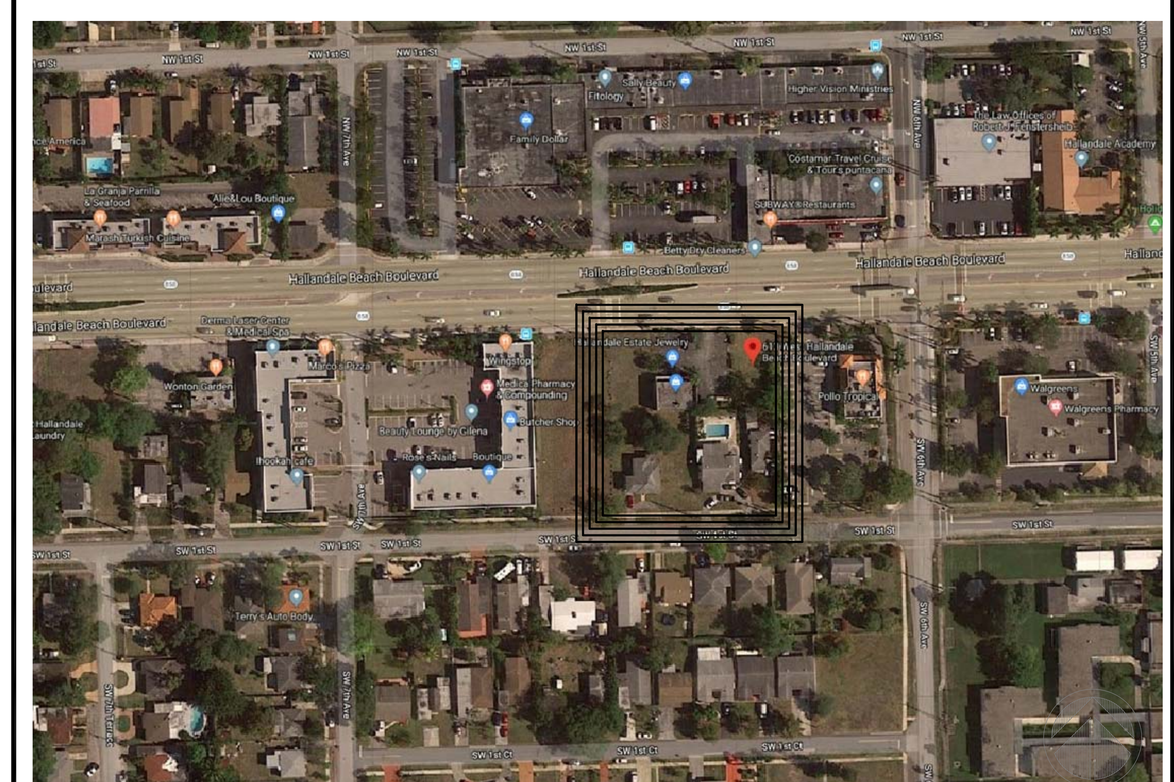

NORTH

4 LOCATION MAP
NTS

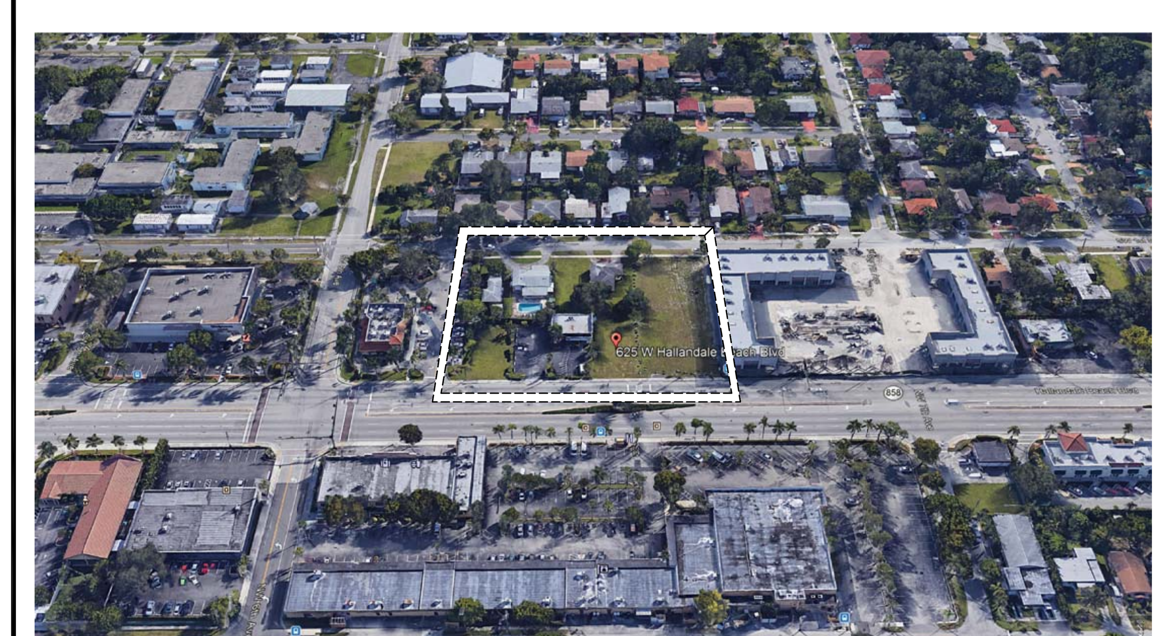

5 AERIAL VIEW
NTS

1. PERMITS: CONTRACTOR SHALL CONTAIN IN THEIR BID AS WELL AS SECURE ALL NECESSARY BUILDING PERMITS, NOT LIMITED, ROOFING, PLUMBING, ELECTRICAL, MECHANICAL, OCCUPANCY AND OTHER PERMITS, AT HIS EXPENSE, SO THAT THE OWNER CAN OBTAIN HIS / HER CERTIFICATE OF OCCUPANCY.

2. QUALIFICATION OF CONTRACTOR: THE GENERAL CONTRACTOR AND ALL SUB - CONTRACTORS SHALL BE LICENSED BY THE STATE OF FLORIDA, AS WELL AS THE COUNTY AND BE INSURED TO MEET THE REQUIREMENTS OF MIAMI DADE COUNTY.

3. OWNER SHALL HAVE THE RIGHT OF APPROVAL OR REJECTION OF ALL SUBCONTRACTORS PRIOR TO SIGNING THE CONTRACT. GENERAL CONTRACTOR SHALL SUBMIT A LIST OF ALL PROPOSED SUBCONTRACTORS AND SUPPLIERS TO THE OWNER FOR THIS PURPOSE.

4. EXISTING CONDITIONS: CONTRACTOR BY AND THROUGH SUBMISSION OF HIS BID, AGREES THAT HE SHALL BE HELD RESPONSIBLE FOR HAVING EXAMINED THE SITE, THE PROPOSED PLANS, THE LOCATION OF ALL PROPOSED WORK AND FOR HAVING SATISFIED HIMSELF FROM HIS OWN PERSONAL KNOWLEDGE AND EXPERIENCE OR PROFESSIONAL ADVICE AS TO THE CHARACTER AND LOCATION OF THE SITE, THE NATURE OF EXISTING CONDITIONS , THE LOCATION OF EXISTING UTILITIES AND ANY OTHER CONDITIONS SURROUNDING AND AFFECTING THE WORK, ANY OBSTRUCTIONS, AND ALL OTHER PHYSICAL CHARACTERISTICS OF THE SITE, IN ORDER THAT HE MAY INCLUDE IN HIS PRICE ALL COSTS PERTAINING TO THE WORK AND THEREBY PROVIDE FOR THE SATISFACTORY COMPLETION OF ANY OBJECTS OR OBSTRUCTION WHICH MAY BE ENCOUNTERED IN DOING THE PROPOSED WORK.

5. ALL MEASUREMENTS AND DIMENSIONS MUST BE VERIFIED BY THE CONTRACTOR IN THE FIELD, THE DIMENSIONS SHOWN ARE AS ACCURATE AS THE BASE BUILDING DOCUMENTS PERMIT. ANY DISCREPANCIES MUST BE BROUGHT TO THE ATTENTION OF THE ARCHITECT IMMEDIATELY PRIOR TO THE COMMENCEMENT OF WORK. DO NOT SCALE DRAWINGS - USE DIMENSIONS ONLY. LARGE SCALE DRAWINGS SHALL GOVERN OVER SMALL. IF DIMENSIONS ARE NOT DESIGNATED ON THE PLANS, AT IS THE RESPONSIBILITY OF THE CONTRACTOR TO VERIFY THEM WITH THE ARCHITECT.

6. COMPLY AT ALL TIMES WITH REQUIREMENTS OF THE FLORIDA BUILDING CODE, LIFE AND SAFETY CODE (N.F.P.A. 101), AND ALL LOCAL CODES AND ORDINANCES.

7. SHOP DRAWINGS: THE CONTRACTOR SHALL SUBMIT ONE COPY ON REPRODUCIBLE SEPIA AND FOUR (4) HARD COPIES OF ALL REQUIRED SHOP DRAWINGS CALLED FOR ON THE DRAWINGS OR REQUIRED BY BUILDING OFFICIALS TO THE ARCHITECT IN SUFFICIENT TIME TO BE REVIEWED AND PROCESSED SO AS TO CAUSE NO TIME DELAY IN THE CONSTRUCTION SEQUENCE.

8. PROTECTION: THE CONTRACTOR SHALL PROTECT ADJACENT PARTS OF EXISTING BUILDINGS FROM DAMAGE DURING ALL PHASES OF CONSTRUCTION, AND BE LIABLE FOR SAME.

9. WORKMANSHIP: ALL MATERIALS AND EQUIPMENT SPECIFIED SHALL BE NEW AND ALL WORKMANSHIP SHALL BE FIRST CLASS FOLLOWING THE MANUFACTURER'S SPECIFICATIONS ALONG WITH THE BEST TRADE PRACTICES AND STANDARDS.

10. ALL WORK TO BE GUARANTEED AGAINST POOR WORKMANSHIP AND DEFECTS.

11. THE GENERAL CONTRACTOR SHALL FURNISH ALL LABOR, MATERIALS AND EQUIPMENT (UNLESS OTHERWISE NOTED) REQUIRED FOR THE COMPLETION OF THE JOB IN ACCORDANCE WITH THESE DRAWINGS.

12. CLEAN UP ALL RUBBISH, REFUSE, SCRAP MATERIALS AND DEBRIS CAUSED BY THIS PROJECT AT THE END OF EACH DAY AND INSURE THAT THE SITE OF WORK SHALL PRESENT A NEAT ORDERLY AND WORKMANLIKE APPEARANCE.

13. GENERAL CONTRACTOR SHALL PRESENT THE JOB TO THE OWNER FOR ACCEPTANCE, CLEANED AND READY FOR OCCUPANCY. ALL GLASS SHALL BE CLEANED AND POLISHED, FLOORS SWEPT BROOM CLEAN, CARPETS VACUUMED, FIXTURES WASHED AND ALL LABELS REMOVED.

14. STORE MATERIALS IN A SAFE AND APPROVED LOCATION. COMPLY WITH ALL REGULATIONS GOVERNING THE NEIGHBORHOOD AS TO MINIMIZE INTERRUPTIONS AND/ OR INTERFERENCE WITH ANY OF THE SURROUNDING OPERATIONS.

15. ALL WOOD IN CONTACT WITH MASONRY SHALL BE PRESSURE TREATED.

6 GENERAL NOTES

1. ELECTRIC VEHICLE (EV) CHARGING STATION/ PARKING.
2. BICYCLE PARKING.
3. RECYCLE BIN PROVIDED WITHIN DUMPSTER ENCLOSURE.
4. CENTRAL AIR CONDITIONER OF 18 SEER OR HIGHER SHALL BE PROVIDED.
5. WINDOWS SHALL BE LOW-E.
6. DOORS SHALL BE ENERGY EFFICIENT.
7. ROOFING MATERIALS ARE ENERGY STAR RATED.
8. ALL THERMOSTATS PROVIDED SHALL BE PROGRAMMABLE.
9. 100% OF THE LANDSCAPING MEETS THE SOUTH FLORIDA WATER MANAGEMENT DISTRICT RECOMMENDATIONS.
10. OUTDOOR LIGHTING SHALL BE ENERGY-EFFICIENT.
11. ALL HOT WATER PIPES HAVE A MINIMUM OF ½" INSULATION.

7 GREEN BUILDING PRACTICES

Kaller Architecture
AA# 26001212
2417 Hollywood Blvd.
Hollywood Florida 33020
954.920.5746
joseph@kallerarchitects.com
www.kallerarchitects.com

SEAL

JOSEPH B. KALLER
FLORIDA R.A. # 0009239

PROJECT TITLE
W HALLANDALE SHOPPES
613 -625 W. HALLANDALE BEACH BLVD
HALLANDALE BEACH, FL 33009

SHEET TITLE
PROJECT INFORMATION
LOCATION MAP
DRAWING INDEX

REVISIONS

No.	DATE	DESCRIPTION
1	9/21/18	MDR COMMENTS

This drawing, as an instrument of service, is and shall remain the property of the Architect and shall not be reproduced, published or used in any way without the permission of the Architect.

PROJECT No.: 18048
DATE: 08-30-18
DRAWN BY: GMV / JP
CHECKED BY: JBK

SHEET
T-1.0

Bidders shall use complete sets of Bidding Documents in preparing bids; neither the Owner nor Architect assumes responsibility for errors or misinterpretations resulting from the use of incomplete or preliminary sets of Bidding Documents. The intent of the Contract Documents is to include all items necessary for the proper execution and completion of the work by the Contractor. The Contract Documents are complimentary, and what is required by one shall be as binding as if required by all; performance by the Contractor shall be required only to the extent consistent with the Contract Documents and reasonably inferable from them as being necessary to produce the intended results.

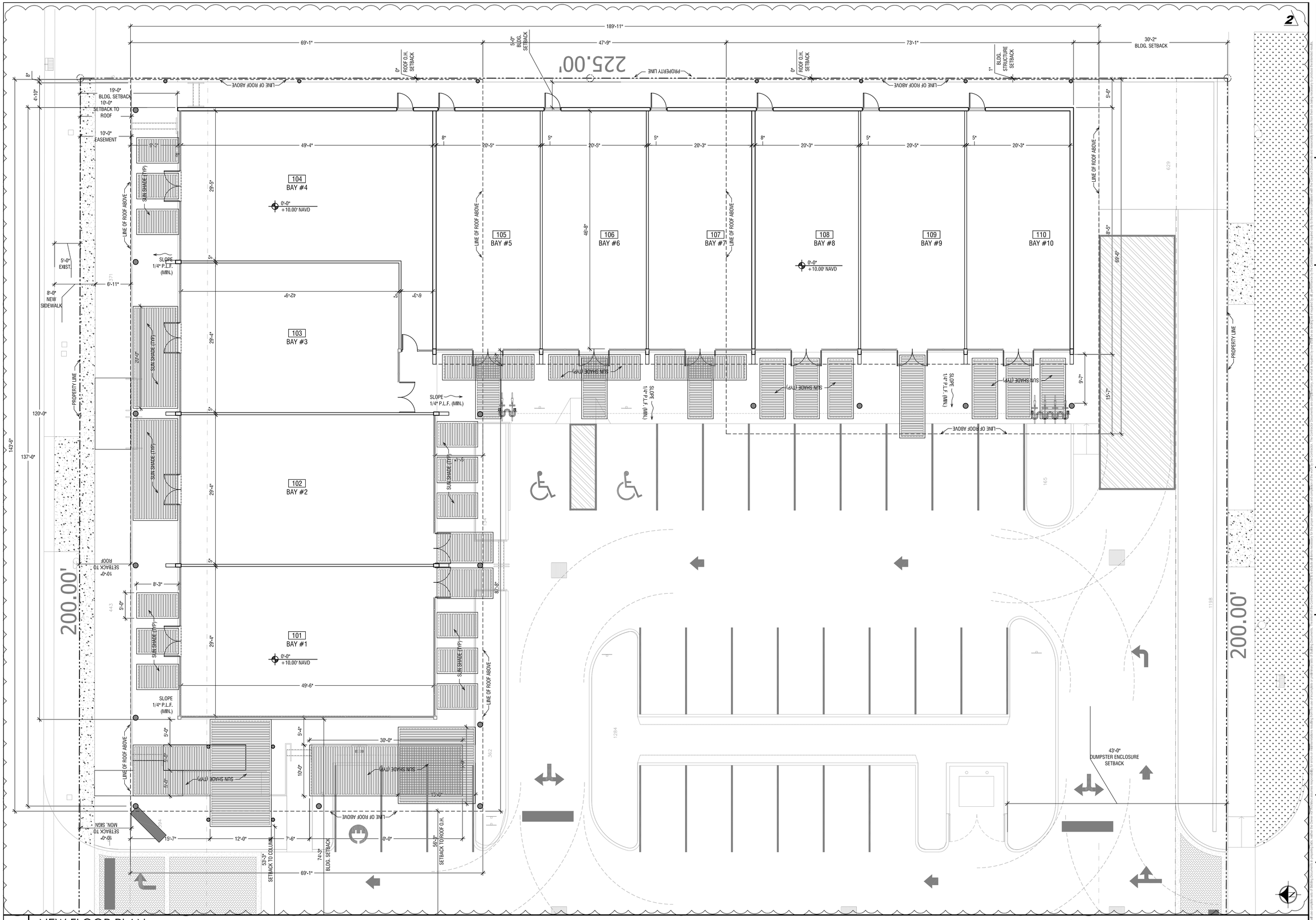

1 NEW FLOOR PLAN
1/8" = 1'-0"

KallerArchitecture
AA# 26001212
2417 Hollywood Blvd.
Hollywood Florida 33020
954.920.5746
joseph@kallerarchitects.com
www.kallerarchitects.com

SEAL

JOSEPH B. KALLER
FLORIDA R.A. # 0009239

PROJECT TITLE
W HALLANDALE SHOPPES
613 -625 W. HALLANDALE BEACH BLVD
HALLANDALE BEACH, FL 33009

SHEET TITLE
NEW FLOOR PLAN

REVISIONS

No.	DATE	DESCRIPTION
1	9/21/18	MDR COMMENTS
2	11.15.18	CITY COMMENTS

This drawing, as an instrument of service, is and shall remain the property of the Architect and shall not be reproduced, published or used in any way without the permission of the Architect.

PROJECT No.: 18048
DATE: 08-30-18
DRAWN BY: GMV / JP
CHECKED BY: JBK

SHEET
A.1-0

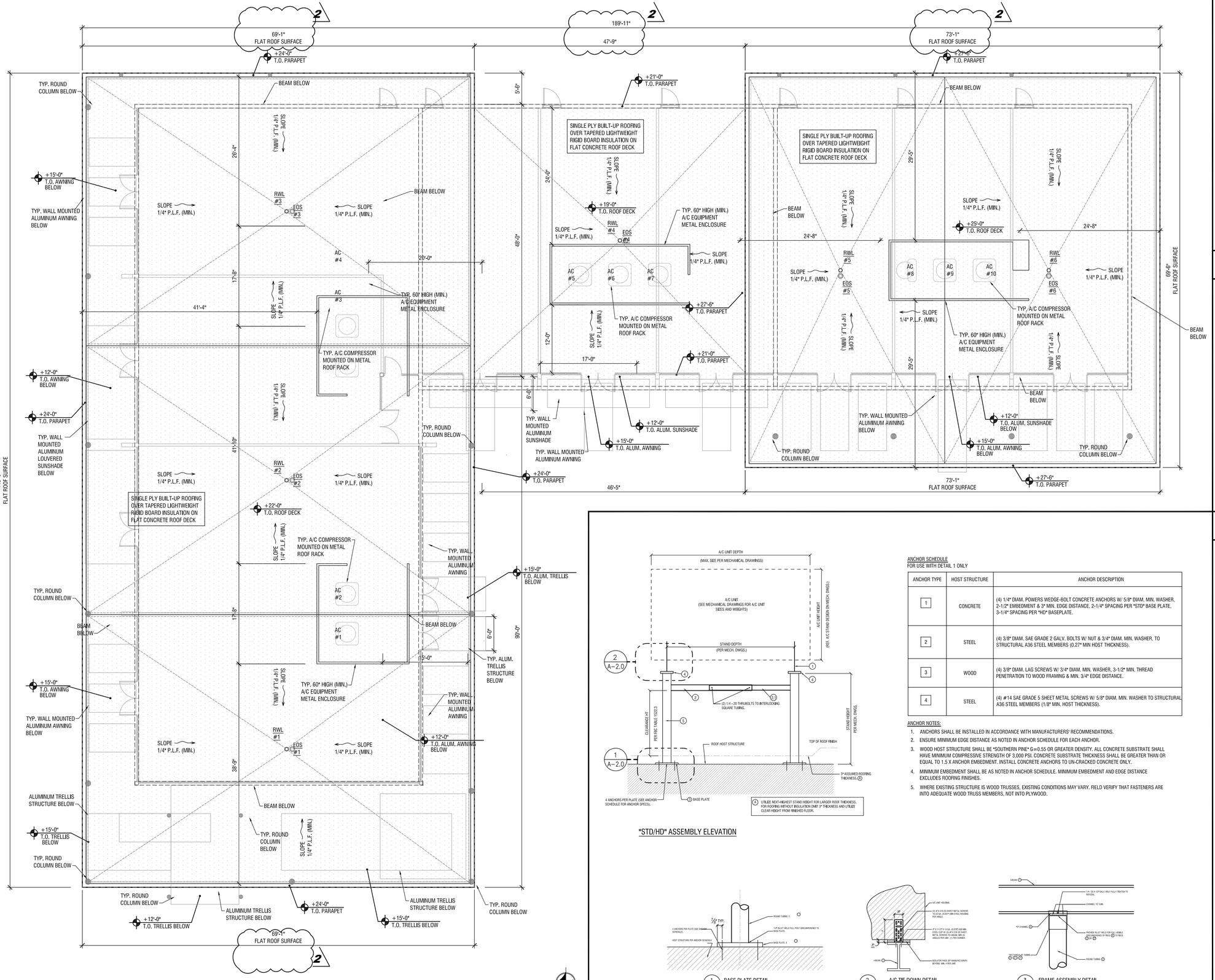

1 NEW ROOF PLAN
1/8" = 1'-0"

"STD/HD" ASSEMBLY ELEVATION

ANCHOR SCHEDULE
FOR USE WITH DETAIL 1 ONLY

ANCHOR TYPE	HOST STRUCTURE	ANCHOR DESCRIPTION
1	CONCRETE	(4) 1/4" DIAM. POWERS WEDGE-BOLT CONCRETE ANCHORS W/ 5/8" DIAM. MIN. WASHER, 2-1/2" EMBEDMENT & 3" MIN. EDGE DISTANCE, 2-1/4" SPACING PER "STD" BASE PLATE, 3-1/4" SPACING PER "HD" BASEPLATE.
2	STEEL	(4) 3/8" DIAM. SAE GRADE 2 GALV. BOLTS W/ NUT & 3/4" DIAM. MIN. WASHER, TO STRUCTURAL A36 STEEL MEMBERS (0.27" MIN HOST THICKNESS).
3	WOOD	(4) 3/8" DIAM. LAG SCREWS W/ 3/4" DIAM. MIN. WASHER, 3-1/2" MIN. THREAD PENETRATION TO WOOD FRAMING & MIN. 3/4" EDGE DISTANCE.
4	STEEL	(4) #14 SAE GRADE 5 SHEET METAL SCREWS W/ 5/8" DIAM. MIN. WASHER TO STRUCTURAL A36 STEEL MEMBERS (1/8" MIN. HOST THICKNESS).

ANCHOR NOTES:

1. ANCHORS SHALL BE INSTALLED IN ACCORDANCE WITH MANUFACTURERS' RECOMMENDATIONS.
2. ENSURE MINIMUM EDGE DISTANCE AS NOTED IN ANCHOR SCHEDULE FOR EACH ANCHOR.
3. WOOD HOST STRUCTURE SHALL BE "SOUTHERN PINE" G=0.55 OR GREATER DENSITY. ALL CONCRETE SUBSTRATE SHALL HAVE MINIMUM COMPRESSIVE STRENGTH OF 3,000 PSI. CONCRETE SUBSTRATE THICKNESS SHALL BE GREATER THAN OR EQUAL TO 1.5 X ANCHOR EMBEDMENT. INSTALL CONCRETE ANCHORS TO UN-CRACKED CONCRETE ONLY.
4. MINIMUM EMBEDMENT SHALL BE AS NOTED IN ANCHOR SCHEDULE. MINIMUM EMBEDMENT AND EDGE DISTANCE EXCLUDES ROOFING FINISHES.
5. WHERE EXISTING STRUCTURE IS WOOD TRUSSES, EXISTING CONDITIONS MAY VARY. FIELD VERIFY THAT FASTENERS ARE INTO ADEQUATE WOOD TRUSS MEMBERS, NOT INTO PLYWOOD.

1 A-2.0 BASE PLATE DETAIL

2 A-2.0 A/C TIE DOWN DETAIL

3 A-2.0 FRAME ASSEMBLY DETAIL

1 NEW ROOF PLAN
1/8" = 1'-0"

2 TYP. CONDENSER UNIT ROOF RACK DETAILS
NTS

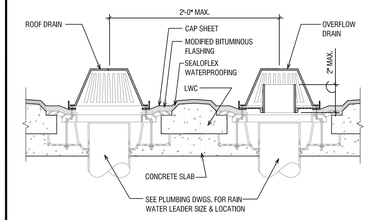

3 DRAIN/ OVERFLOW DETAIL
NTS

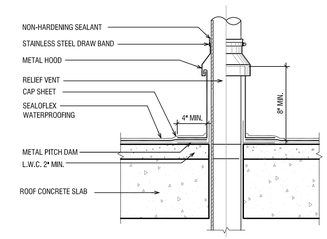

4 VENT. FLASHING SYSTEM
NTS

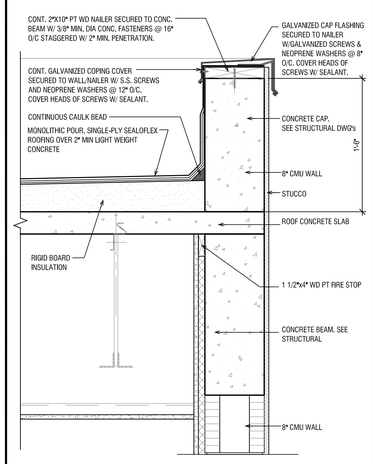

5 PARAPET FLASHING DETAIL
NTS

KA
KallerArchitecture
AA# 26001212
2417 Hollywood Blvd.
Hollywood Florida 33020
954.920.5746
joseph@kallerarchitects.com
www.kallerarchitects.com

SEAL

JOSEPH B. KALLER
FLORIDA R.A. # 0009239

PROJECT TITLE
W HALLANDALE SHOPPES
613 -625 W. HALLANDALE BEACH BLVD
HALLANDALE BEACH, FL 33009

SHEET TITLE
NEW ROOF PLAN
TYP. ROOF DETAILS

REVISIONS

No.	DATE	DESCRIPTION
1	9/21/18	MDR COMMENTS
2	11.14.18	CITY COMMENTS

This drawing, as an instrument of service, is and shall remain the property of the Architect and shall not be reproduced, published or used in any way without the permission of the Architect.

PROJECT No.: 18048
DATE: 08-30-18
DRAWN BY: GMV / JP
CHECKED BY: JBK

SHEET
A.2-0

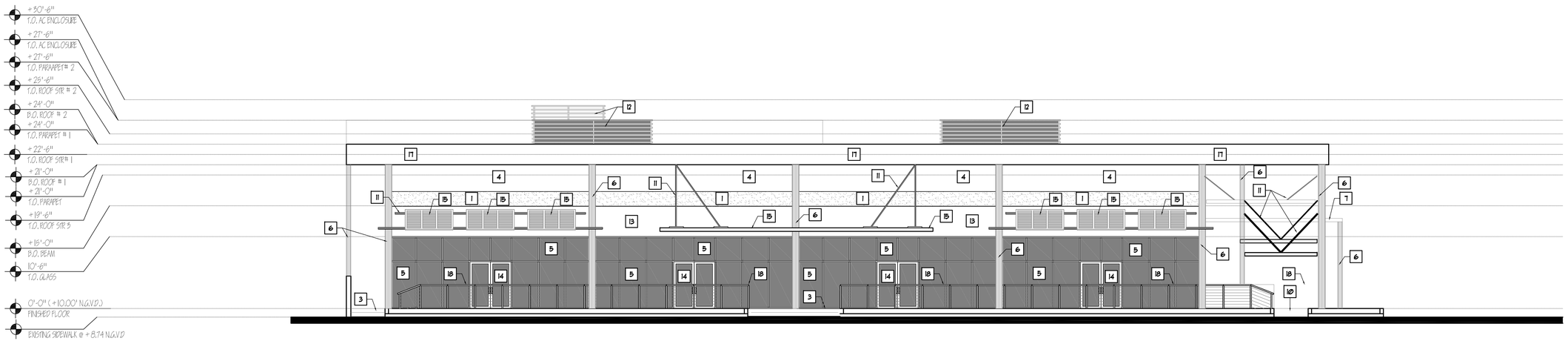

1 NORTH ELEVATION
1/8 " = 1'-0"

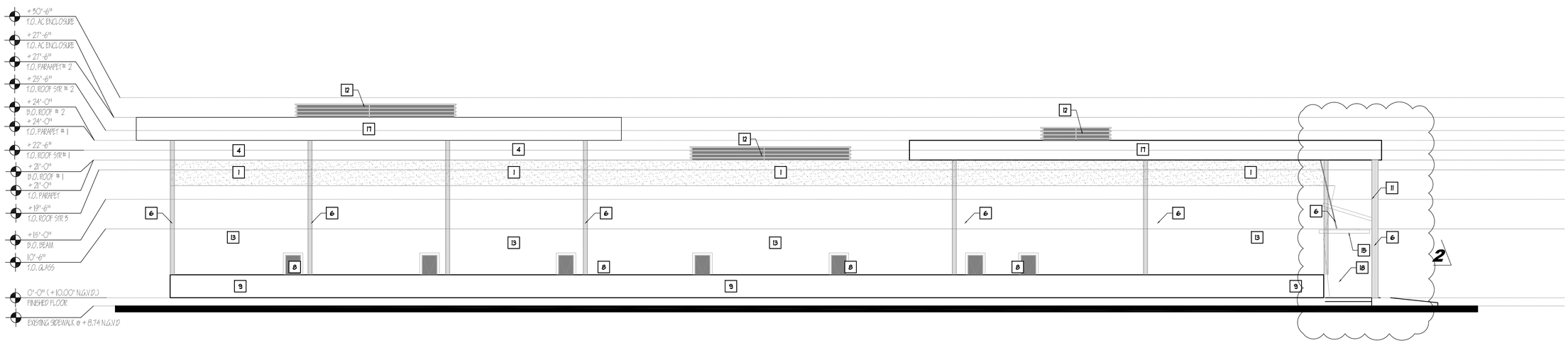

2 EAST ELEVATION
1/8 " = 1'-0"

1 SMOOTH STUCCO FINISH - WHITE COLOR

2 DUMPSTER ENCLOSURE

3 CONCRETE STEPS

4 SMOOTH STUCCO FINISH - DARK GRAY

5 IMPACT RATED STOREFRONT WINDOWS

6 BLACK POWDER COAT STEEL COLUMN

7 POWDER COAT PAINT ALUMINUM TRELLIS

8 SERVICE EXIT DOOR

9 6'-0" HIGH CMU WALL, PAINTED STUCCO FINISH

10 ADA RAMP

11 1-1/2" STAINLESS STEEL REVEL

12 OPAQUE AC UNIT ENCLOSURE

13 WHITE BRICK FINISH

14 IMPACT RATED DOOR

15 BLACK POWDER COAT ANODIZED ALUMINUM LOUVER, GC TO PROVIDE N.O.A. PRIOR TO FABRICATION

16 SHOPPING CENTER SIGN

17 ROOF

18 42" HIGH RAILING

3 KEY NOTES

KallerArchitecture
AA# 26001212
2417 Hollywood Blvd.
Hollywood Florida 33020
954.920.5746
joseph@kallerarchitects.com
www.kallerarchitects.com

SEAL

JOSEPH B. KALLER
FLORIDA R.A. # 0009239

PROJECT TITLE
W HALLANDALE SHOPPES
613 -625 W. HALLANDALE BEACH BLVD
HALLANDALE BEACH, FL 33009

SHEET TITLE
NORTH & EAST ELEVATIONS
KEYNOTES

REVISIONS

No.	DATE	DESCRIPTION
1	9/21/18	MDR COMMENTS
2	11.14.18	CITY COMMENTS

This drawing, as an instrument of service, is and shall remain the property of the Architect and shall not be reproduced, published or used in any way without the permission of the Architect.

PROJECT No.: 18048
DATE: 08-30-18
DRAWN BY: GMV / JP
CHECKED BY: JBK

SHEET
A-3.0

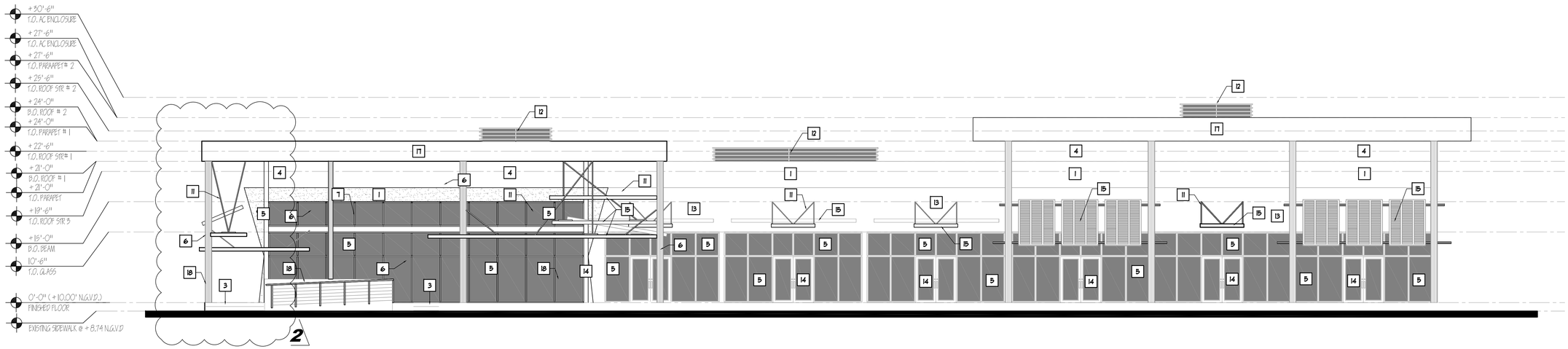

1 WEST ELEVATION
1/8 " = 1'-0"

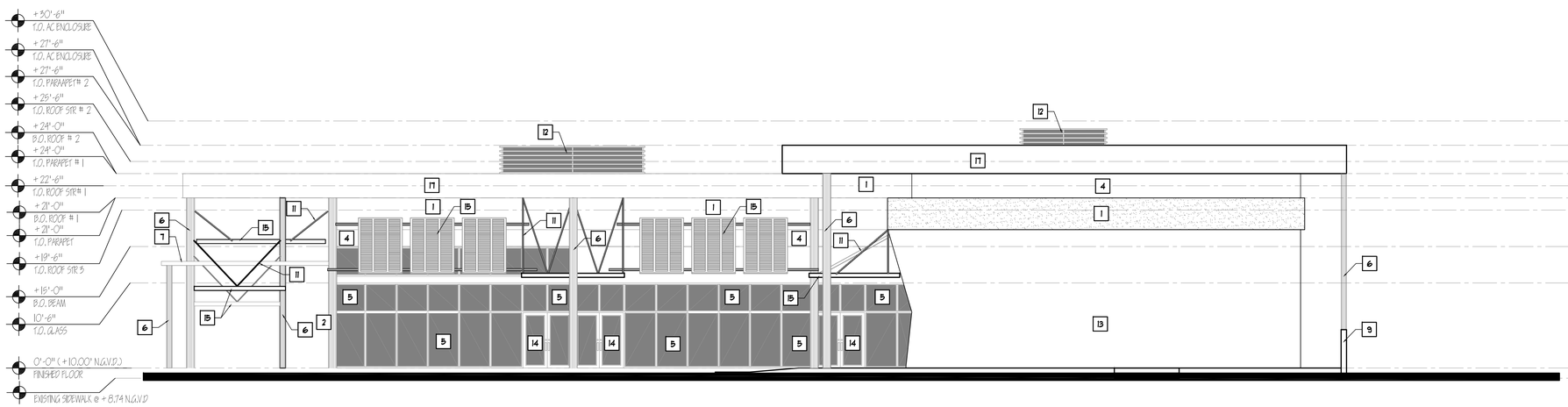

2 SOUTH ELEVATION
1/8 " = 1'-0"

1. SMOOTH STUCCO FINISH - WHITE COLOR
2. DUMPSTER ENCLOSURE
3. CONCRETE STEPS
4. SMOOTH STUCCO FINISH - DARK GRAY
5. IMPACT RATED STOREFRONT WINDOWS
6. BLACK POWDER COAT STEEL COLUMN
7. POWDER COAT PAINT ALUMINUM TRELLIS
8. SERVICE EXIT DOOR
9. 6'-0" HIGH CMU WALL, PAINTED STUCCO FINISH
10. ADA RAMP
11. 1-1/2" STAINLESS STEEL REVEL
12. OPAQUE AC UNIT ENCLOSURE
13. WHITE BRICK FINISH
14. IMPACT RATED DOOR
15. BLACK POWDER COAT ANODIZED ALUMINUM LOUVER, GC TO PROVIDE N.O.A. PRIOR TO FABRICATION
16. SHOPPING CENTER SIGN
17. ROOF
18. 42" HIGH RAILING

3 KEY NOTES

KallerArchitecture
AA# 26001212
2417 Hollywood Blvd.
Hollywood Florida 33020
954.920.5746
joseph@kallerarchitects.com
www.kallerarchitects.com

SEAL

JOSEPH B. KALLER
FLORIDA R.A. # 0009239

PROJECT TITLE
W HALLANDALE SHOPPES
613 -625 W. HALLANDALE BEACH BLVD
HALLANDALE BEACH, FL 33009

SHEET TITLE
WEST & SOUTH ELEVATIONS
KEYNOTES

REVISIONS

No.	DATE	DESCRIPTION
1	9/21/18	MDR COMMENTS
2	11.14.18	CITY COMMENTS

This drawing, as an instrument of service, is and shall remain the property of the Architect and shall not be reproduced, published or used in any way without the permission of the Architect.

PROJECT No.:	18048
DATE:	08-30-18
DRAWN BY:	GMV / JP
CHECKED BY:	JBK

SHEET
A-4.0

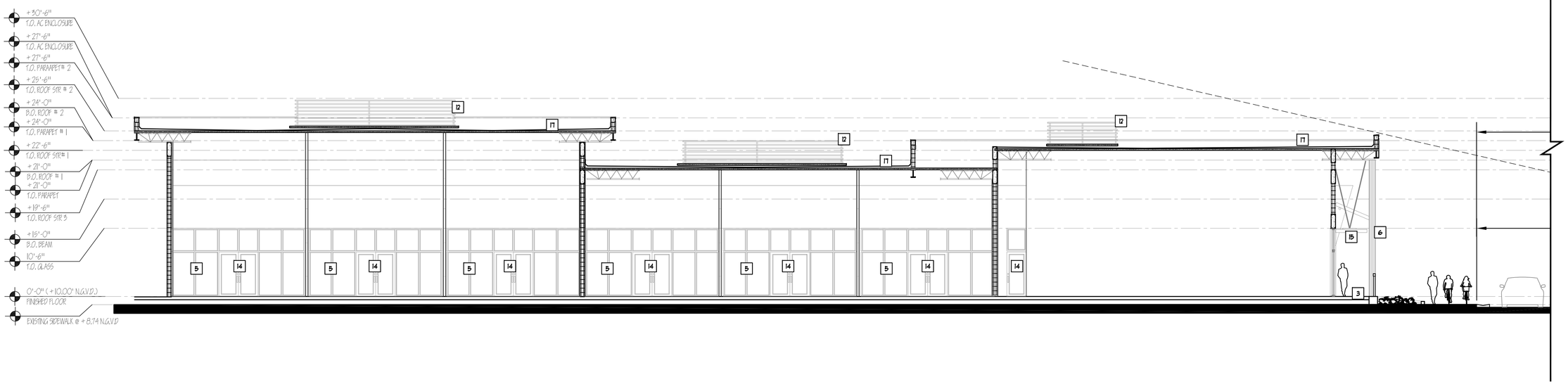

1 BUILDING SECTION
1/8 " = 1'-0"

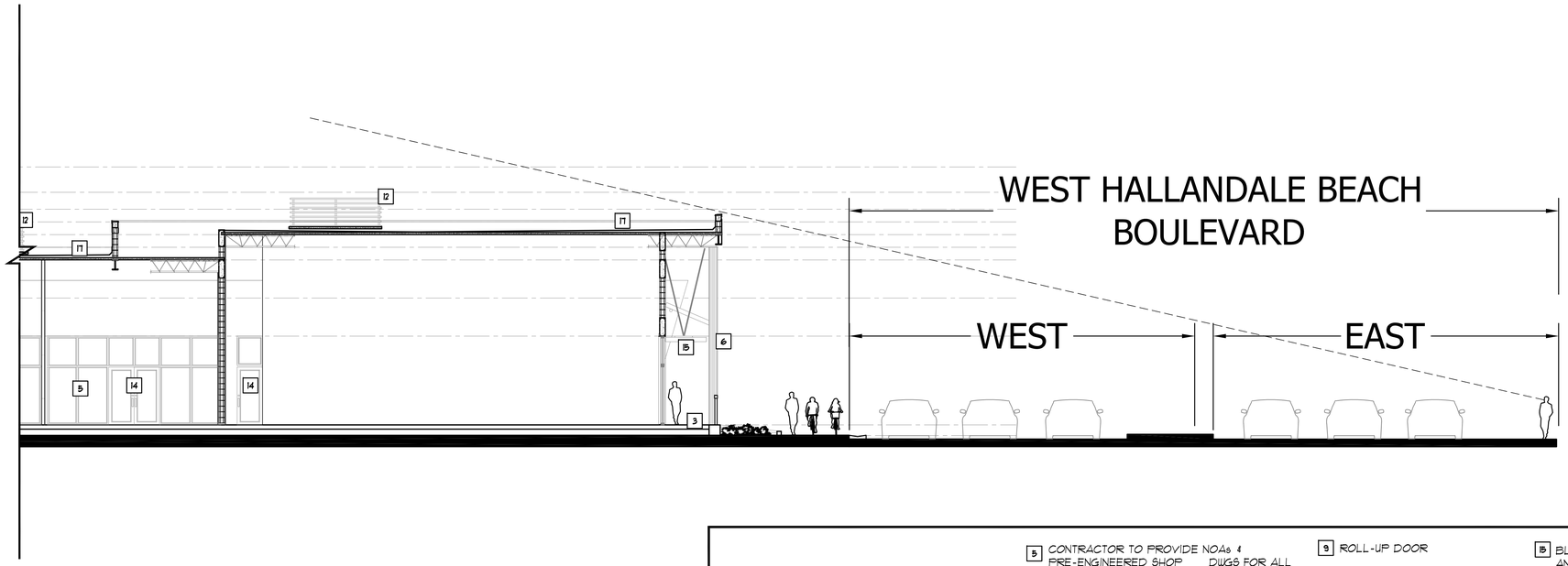

ELEVATIONS KEY-NOTES:

1. SMOOTH STUCCO FINISH - WHITE COLOR
2. DUMPSTER ENCLOSURE
3. CONCRETE STEPS
4. SMOOTH STUCCO FINISH - DARK GREY
5. CONTRACTOR TO PROVIDE NOAs & PRE-ENGINEERED SHOP DWGS FOR ALL EXTERIOR IMPACT RESISTANT WINDOWS & DOORS FOR ARCHITECT REVIEW/APPROVAL PRIOR TO FABRICATION
6. BLACK POWDER COAT STEEL COLUMN
7. CONCRETE COLUMN
8. SERVICE EXIT DOOR
9. ROLL-UP DOOR
10. MONUMENT SIGN
11. 1-1/2" STAINLESS STEEL REVEL
12. OPAQUE AC UNIT ENCLOSURE
13. WHITE BRICK FINISH
14. ENTRY DOOR
15. BLACK POWDER COAT ANODIZED ALUMINUM LOUVER, GC TO PROVIDE N.O.A. PRIOR TO FABRICATION
16. SHOPPING CENTER SIGN
17. ROOF
18. 42" HIGH RAILING

2 KEY NOTES

KA
Kaller Architecture
AA# 26001212
2417 Hollywood Blvd.
Hollywood Florida 33020
954.920.5746
joseph@kallerarchitects.com
www.kallerarchitects.com

SEAL

JOSEPH B. KALLER
FLORIDA R.A. # 0009239

PROJECT TITLE
W HALLANDALE SHOPPES
613 -625 W. HALLANDALE BEACH BLVD
HALLANDALE BEACH, FL 33009

SHEET TITLE
BUILDING SECTIONS
KEYNOTES

REVISIONS

No.	DATE	DESCRIPTION
1	9/21/18	MDR COMMENTS

This drawing, as an instrument of service, is and shall remain the property of the Architect and shall not be reproduced, published or used in any way without the permission of the Architect.

PROJECT No.:	18048
DATE:	08-30-18
DRAWN BY:	GMV / JP
CHECKED BY:	JBK

SHEET
A-5.0

1 N.E. VIEW FACING WEST HALLANDALE BEACH BLVD.

2 N.W. VIEW FACING WEST HALLANDALE BEACH BLVD.

3 WEST VIEW FROM PARKING LOT

4 AERIAL VIEW FROM NORTH SIDE

KallerArchitecture
AA# 26001212
2417 Hollywood Blvd.
Hollywood Florida 33020
954.920.5746
joseph@kallerarchitects.com
www.kallerarchitects.com

SEAL

JOSEPH B. KALLER
FLORIDA R.A. # 0009239

PROJECT TITLE
W HALLANDALE SHOPPES
613 -625 W. HALLANDALE BEACH BLVD
HALLANDALE BEACH, FL 33009

SHEET TITLE
CONCEPTUAL RENDERINGS

REVISIONS

No.	DATE	DESCRIPTION
1	9/21/18	MDR COMMENTS

This drawing, as an instrument of service, is and shall remain the property of the Architect and shall not be reproduced, published or used in any way without the permission of the Architect.

PROJECT No.: 18048
DATE: 08-30-18
DRAWN BY: GMV / JP
CHECKED BY: JBK

SHEET
A-6.0

Bidders shall submit complete sets of Bidding Documents to the Owner. The Contract Documents are to include all items necessary for the proper execution and completion of the work by the Contractor. Contractor shall be responsible for the correct dimensions, and shall be required to verify all dimensions on the job before proceeding with the work. The Contractor shall be responsible for the proper execution of all work in accordance with the Contract Documents and applicable laws, codes, rules and regulations. Any errors or discrepancies in the Contract Documents shall be reported to the Architect immediately. The Contractor shall be responsible for the cost of correction of preliminary work if it proceeds with work in the area of discrepancy prior to receiving clarification from the Architect.

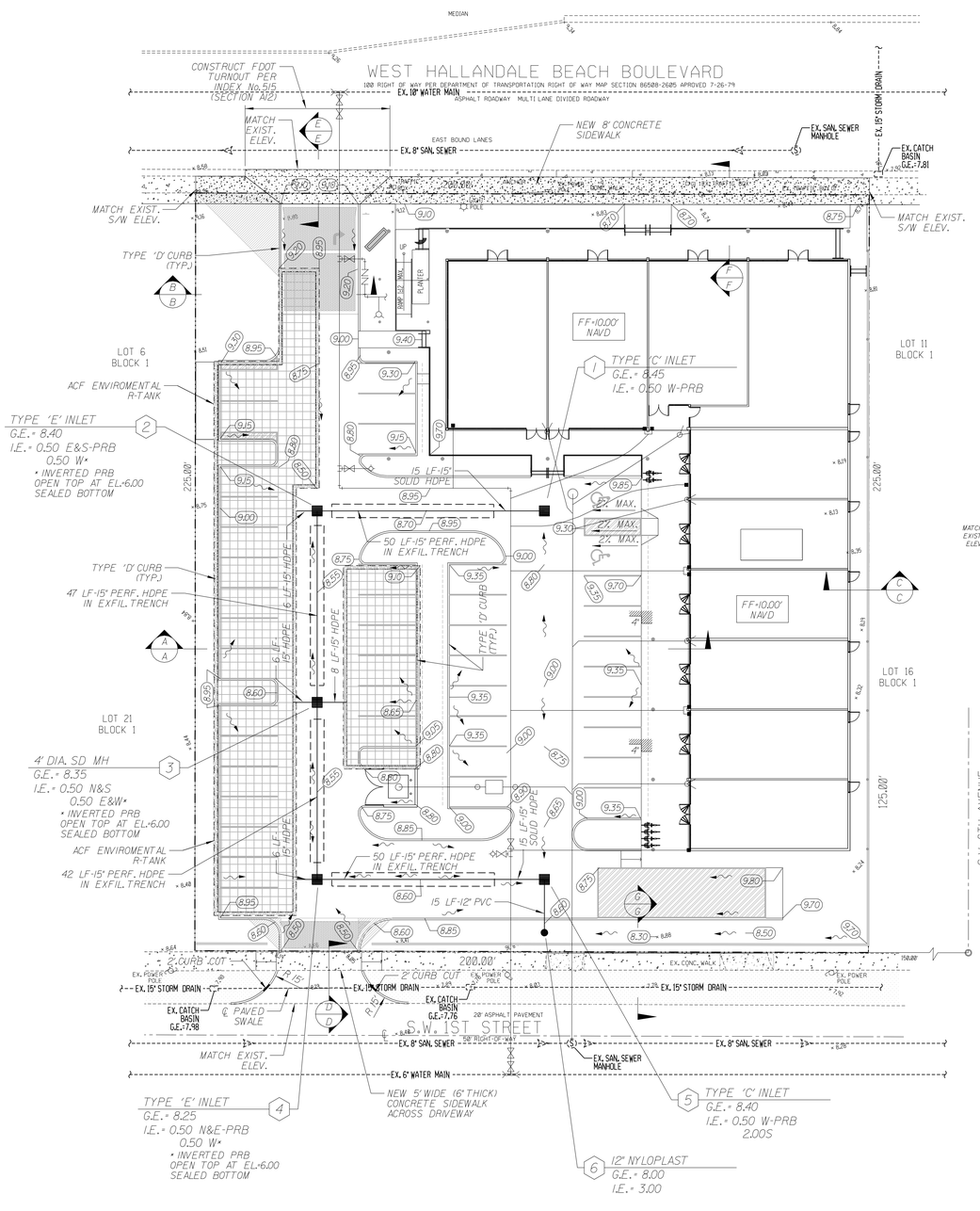

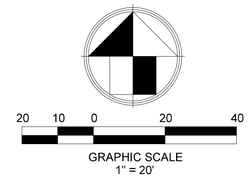

LOCATION MAP
N.T.S.

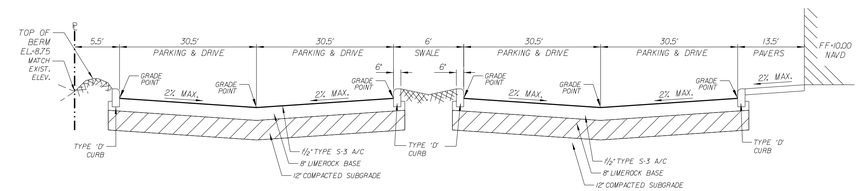

SECTION "A-A"
N.T.S.

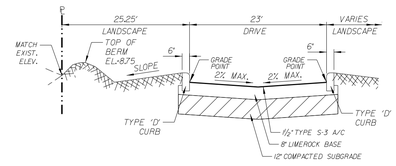

SECTION "B-B"
N.T.S.

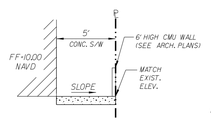

SECTION "C-C"
N.T.S.

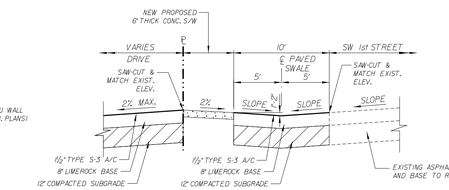

SECTION "D-D"
N.T.S.

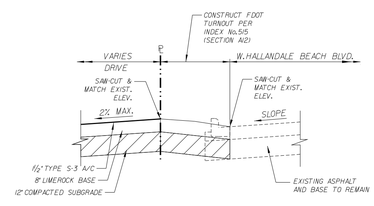

SECTION "E-E"
N.T.S.

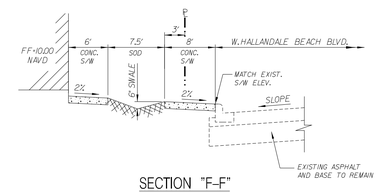

SECTION "F-F"
N.T.S.

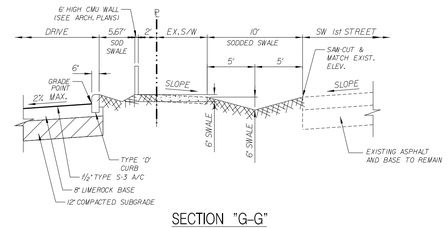

SECTION "G-G"
N.T.S.

NOTE:
FOR SITE DIMENSIONS REFER TO ARCHITECTURAL SITE PLAN.

NOTE:
ALL ELEVATIONS SHOWN ARE BASED ON THE NORTH AMERICAN VERTICAL DATUM OF 1988 (NAVD).

Always call 811 two full business days before you dig to have underground utilities located and marked.

Sunshine811.com

REVISIONS:
1.
2.
3.
4.
5.
6.
7.
8.

CLIENT:
Kaller Architects
2417 Hollywood Boulevard
Hollywood, Florida 33020-6605
(954) 920-5746

PROJECT:
613 Hallandale Beach Blvd.
HALLANDALE BEACH FLORIDA 33304

TASK:
PAVING, GRADING AND DRAINAGE PLAN

GGB Engineering, Inc.
CIVIL AND FORENSIC ENGINEERS • LAND PLANNERS
• CONSTRUCTION MANAGERS
FLORIDA REGISTRATION No. 8118
email: gary@ggbeng.com
2609 Stirling Road, Suite C-202
Fort Lauderdale, Florida 33312
Phone: (954) 986-9809
Fax: (954) 986-6655

DATE:	SCALE:
March 2018	1"=20'
DESIGNED BY: G.G.B.	DRAWN BY: F.M.

PROJECT NO. 18-0425

SHEET C-1

GARY G. BLOOM, P.E.
FLA. LIC. No. 19832
NOT VALID UNLESS SIGNED AND SEALED BY ENGINEER

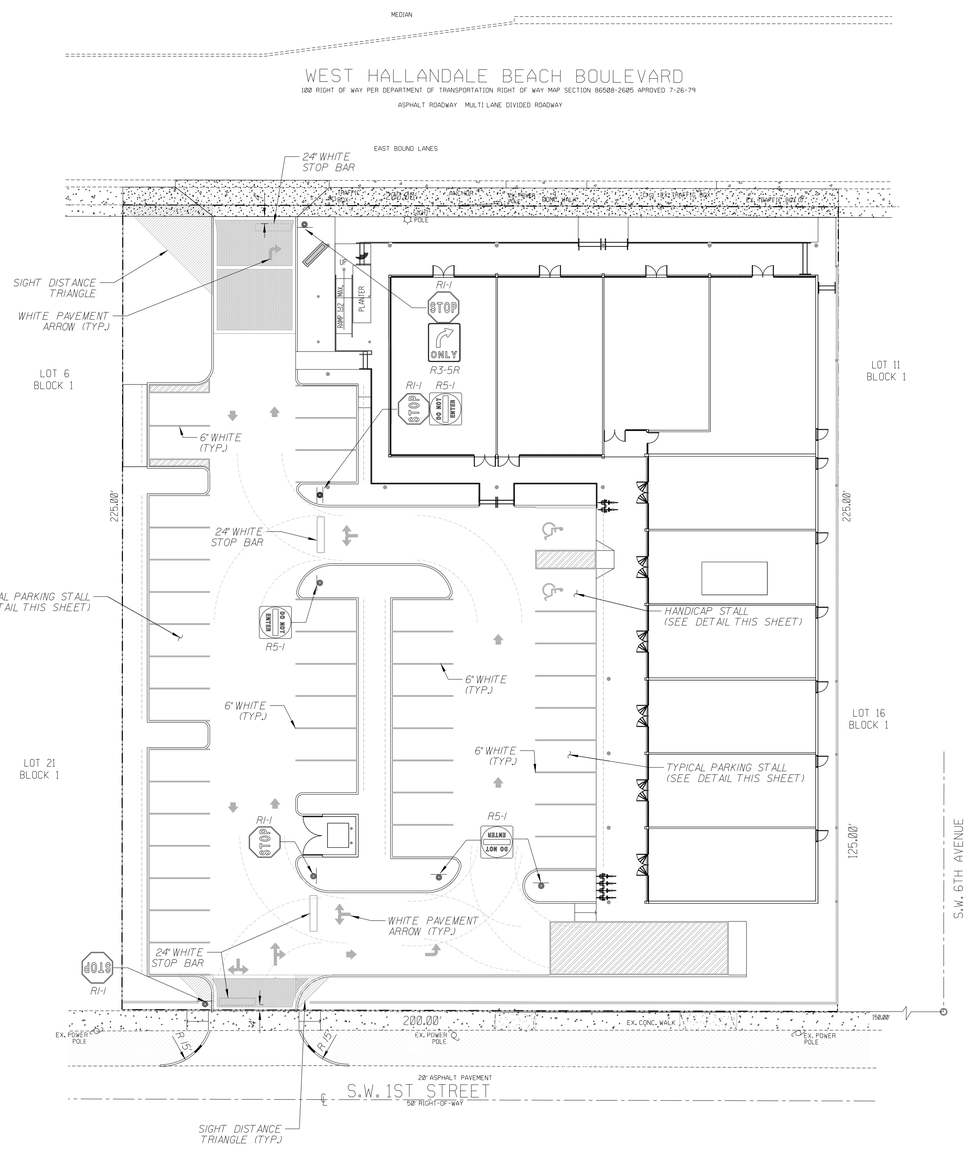

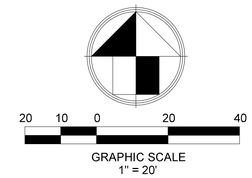

LOCATION MAP

N.T.S.

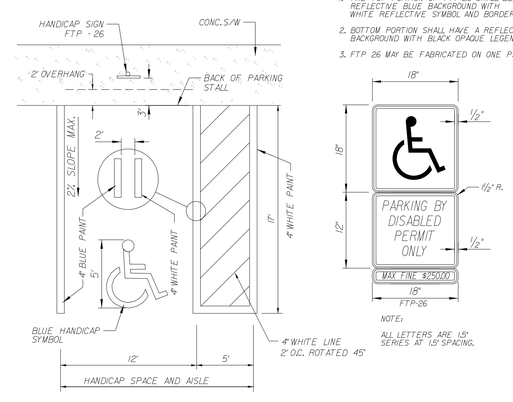

NOTE:

1. THE TOP PORTION OF FTP-26 SHALL BE REFLECTIVE BLUE BACKGROUND WITH WHITE REFLECTIVE SYMBOL AND BORDER.
2. BOTTOM PORTION SHALL HAVE A REFLECTIVE WHITE BACKGROUND WITH BLACK OPAQUE LEGEND AND BORDER.
3. FTP 26 MAY BE FABRICATED ON ONE PANEL OR TWO.

HANDICAP STALL AND SIGN DETAIL

N.T.S.

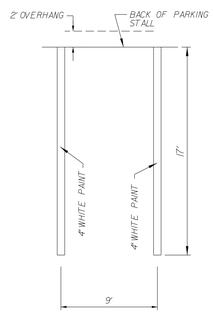

TYPICAL PARKING STALL DETAIL

N.T.S.

NOTE:
ALL PAVEMENT MARKINGS TO CONFORM TO BROWARD COUNTY STANDARDS LATEST EDITION.

Always call 811 two full business days before you dig to have underground utilities located and marked.

Sunshine811.com

REVISIONS:
1.
2.
3.
4.
5.
6.
7.
8.

CLIENT:
Kaller Architects
2417 Hollywood Boulevard
Hollywood, Florida 33020-6605
(954) 920-5746

613 Hallandale Beach Blvd.
HALLANDALE BEACH FLORIDA 33304

TASK:
PAVEMENT MARKINGS AND SIGNAGE PLAN

GGB Engineering, Inc.
CIVIL AND FORENSIC ENGINEERS • LAND PLANNERS
• CONSTRUCTION MANAGERS
FLORIDA REGISTRATION No. 8118
2699 Stirling Road, Suite C-202
Fort Lauderdale, Florida 33312
email: gary@ggbeng.com
Phone: (954) 986-9899
Fax: (954) 986-8655

DATE:	SCALE:
March 2018	1"=20'
DESIGNED BY: G.G.B.	DRAWN BY: F.M.

PROJECT NO. 18-0425

SHEET C-1A

GARY G. BLOOM, P.E.
FL# LIC. No. 19812
NOT VALID UNLESS SIGNED AND SEALED BY ENGINEER

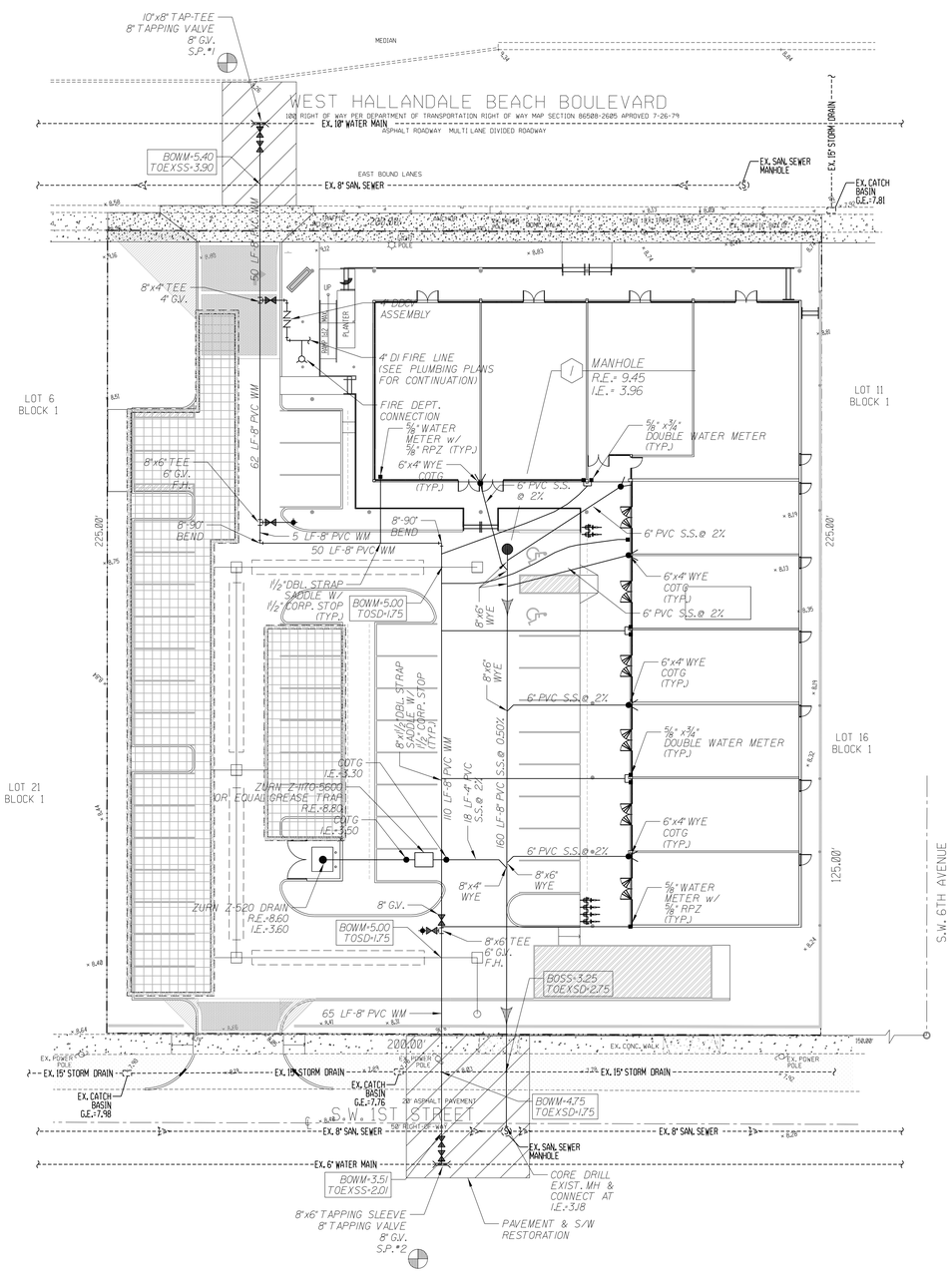

NOTE:
FOR SITE DIMENSIONS AND PAVEMENT MARKINGS REFER TO ARCHITECTURAL SITE PLAN.

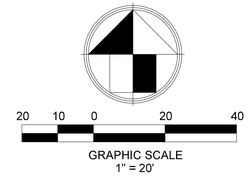

LOCATION MAP
N.T.S.

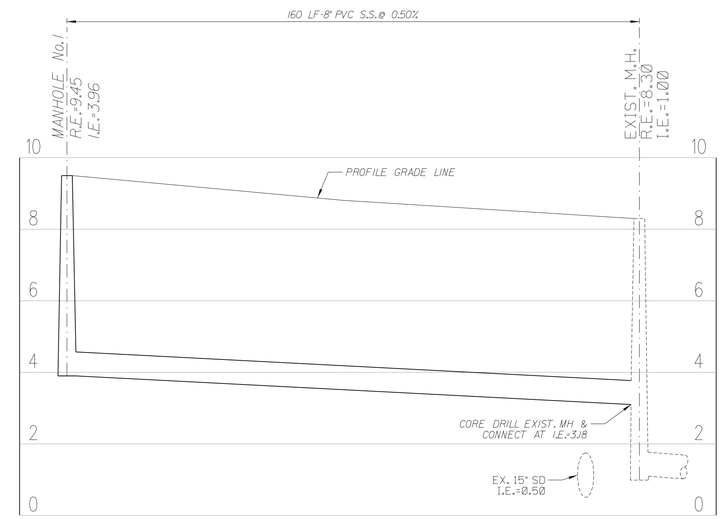

SANITARY SEWER PROFILE

SCALE:
1"=20' HORIZ.
1"=2' VERT.

SEWER LEGEND

R.E.	RIM ELEVATION
I.E.	INVERT ELEVATION
MANHOLE R.E.= I.E.=	MANHOLE DESIGNATION
25 L.F./8" S.S. @ 0.42%	LENGTH & SLOPE OF PIPE
	DOUBLE SEWER LATERAL
	SINGLE SEWER LATERAL
	EXISTING OR FUTURE UTILITIES
C.O.T.G.	CLEAN OUT TO GRADE
	D.I.P. PIPE

WATER LEGEND

	DOUBLE WATER METER SERVICE
	SINGLE WATER METER SERVICE
85 L.F./ 8" W.M.	LENGTH, SIZE & TYPE OF WATER MAIN
	FIRE HYDRANT, GATE VALVE & TEE ASSEMBLY
	PROPOSED GATE VALVE
S.P.#2	BACTERIOLOGICAL SAMPLING POINT
	EXISTING OR FUTURE UTILITIES
	D.I.P. PIPE

Always call 811 two full business days before you dig to have underground utilities located and marked.

Sunshine811.com

REVISIONS:
1.
2.
3.
4.
5.
6.
7.
8.

CLIENT:
Kaller Architects
2417 Hollywood Boulevard
Hollywood, Florida 33020-6605
(954) 920-5746

PROJECT:
613 Hallandale Beach Blvd.
HALLANDALE BEACH FLORIDA 33304

TASK:
WATER AND SEWER PLAN

GGB Engineering, Inc.
CIVIL AND FORENSIC ENGINEERS • LAND PLANNERS
• CONSTRUCTION MANAGERS
FLORIDA REGISTRATION No. 8118
email: gary@ggbeng.com
Phone: (954) 986-9809
Fax: (954) 986-6655
2609 Stirling Road, Suite C-202
Fort Lauderdale, Florida 33312

DATE:	SCALE:
March 2018	1"=20'
DESIGNED BY: G.G.B.	DRAWN BY: F.M.

PROJECT NO.
18-0425

SHEET
C-2

GARY G. BLOOM, P.E.
FLA LIC. No. 19832
NOT VALID UNLESS SIGNED AND SEALED BY ENGINEER

GENERAL NOTES

1. THE LOCATION AND SIZE OF ALL EXISTING UTILITIES AND TOPOGRAPHY HAVE BEEN PREPARED FROM THE MOST RELIABLE INFORMATION AVAILABLE TO THE ENGINEER. THIS INFORMATION IS NOT GUARANTEED AND IT IS THE CONTRACTOR'S RESPONSIBILITY TO DETERMINE THE EXACT LOCATION OF ANY EXISTING UTILITIES AND TOPOGRAPHY PRIOR TO CONSTRUCTION. THE CONTRACTOR SHALL VERIFY ALL UTILITIES, BY ELECTRONIC METHODS AND BY HAND EXCAVATION IN COORDINATION WITH ALL UTILITY COMPANIES, PRIOR TO BEGINNING ANY CONSTRUCTION OPERATIONS. THIS WORK BY THE CONTRACTOR SHALL BE CONSIDERED INCIDENTAL TO THE CONTRACT AND NO ADDITIONAL COMPENSATION SHALL BE ALLOWED. ANY AND ALL CONFLICTS OF EXISTING UTILITIES WITH PROPOSED IMPROVEMENTS SHALL BE RESOLVED WITH THE ENGINEER PRIOR TO BEGINNING ANY CONSTRUCTION OPERATIONS.

2. UNDER FLORIDA STATUTES, THE CONTRACTOR MUST PROVIDE A 48 HOUR NOTIFICATION PRIOR TO ANY OPERATION WHICH WOULD "PIERCE THE EARTH'S SURFACE" WITH THE WORK STARTED WITHIN FIVE WORKING DAYS AFTER ALL UNDERGROUND UTILITIES HAVE BEEN IDENTIFIED. THE NOTIFICATION NUMBER IS A ONE CALL SYSTEM STATEWIDE AT (800) 432-4770 . FAILURE TO COMPLY COULD RESULT IN FINES AND DAMAGES.

UNIVERSAL COLOR CODE FOR MARKING
UNDERGROUND UTILITY LINES

RED	ELECTRIC
YELLOW	GAS-OIL
ORANGE	COMMUNICATION, CATV
BLUE	WATER
GREEN	SEWER
PINK	SURVEY MARKINGS
WHITE	PROPOSED EXCAVATION

3. PRIOR TO CONSTRUCTION, THE CONTRACTOR SHALL NOTIFY THE FOLLOWING UTILITY COMPANIES:

   FLORIDA POWER AND LIGHT COMPANY
   BELL SOUTH
   COMCAST CATV
   CITY OF HOLLYWOOD

4. ALL ELEVATIONS ARE BASED UPON THE NATIONAL GEODETIC VERTICAL DATUM (NGVD) OF 1929.

5. THE CONTRACTOR SHALL SUBMIT THREE (3) SETS OF SHOP DRAWINGS FOR APPROVAL TO THE ENGINEER OF RECORD PRIOR TO FABRICATION OR CONSTRUCTION FOR ALL MATERIALS USED ON THE PROJECT. APPROVED SHOP DRAWINGS FROM THE ENGINEER SHALL THEN BE SUBMITTED TO CITY OF HOLLYWOOD FOR THEIR APPROVAL. NO CONSTRUCTION SHALL COMMENCE UNTIL THE APPROVED SHOP DRAWINGS HAVE BEEN OBTAINED BY THE CONTRACTOR FROM THE ENGINEER.

6. THE CONTRACTOR SHALL BE RESPONSIBLE FOR THE REPAIR AND RESTORATION OF EXISTING PAVEMENT, PIPES, CONDUITS, CABLES, ETC., AND LANDSCAPED AREAS DAMAGED AS A RESULT OF THE CONTRACTOR'S OPERATIONS AND/OR THOSE OF HIS SUBCONTRACTORS, AND SHALL RESTORE THEM PROMPTLY.

7. THE CONTRACTOR SHALL COORDINATE THE WORK WITH OTHER CONTRACTORS IN THE AREA AND ANY OTHER UNDERGROUND CONDUIT REQUIRED FOR FP&L, BELL SOUTH, IRRIGATION SYSTEM, ETC. PRIOR TO BEGINNING SUBGRADE. THE CONTRACTOR SHALL COORDINATE RELOCATION OF ALL EXISTING UTILITIES WITH APPLICABLE UTILITY COMPANIES.

8. ALL EXISTING UTILITIES SHALL REMAIN ACTIVE UNLESS OTHERWISE NOTED.

9. THE CONTRACTOR SHALL ADJUST ALL EXISTING UTILITY CASTINGS, INCLUDING VALVE BOXES, JUNCTION BOXES, MANHOLES, HAND HOLES, PULL BOXES, INLETS AND SIMILAR STRUCTURES IN AREAS OF CONSTRUCTION. ALL ADJUSTMENTS TO BE COORDINATED WITH THE APPLICABLE UTILITY COMPANY.

10. THE CONTRACTOR SHALL OBTAIN ANY NECESSARY TREE REMOVAL PERMITS FROM THE CITY OF HOLLYWOOD PRIOR TO COMMENCING WORK.

11. PRIOR TO FINAL ACCEPTANCE, THE CONTRACTOR SHALL SUPPLY THE ENGINEER OF RECORD WITH THE CERTIFICATION THAT ALL CONSTRUCTION AND MATERIALS MEET OR EXCEEDS THE DESIGN AND HAS BEEN INSTALLED PER THE DRAWINGS AND/OR AS-BUILT DRAWINGS.

12. COMPLIANCE WITH THE "TRENCH SAFETY ACT" IS REQUIRED FOR ALL EXCAVATIONS IN EXCESS OF 5 FOOT DEPTHS.

PAVING, GRADING AND DRAINAGE NOTES

1. ALL UNSUITABLE MATERIALS, SUCH AS MUCK, HARDPAN, ORGANIC MATERIAL AND OTHER DELETERIOUS MATERIAL AS CLASSIFIED BY AASHTO M-145, FOUND WITHIN THE ROAD AND PARKING LOT AREA SHALL BE REMOVED DOWN TO ROCK OR SUITABLE MATERIAL, AND REPLACED WITH THE SPECIFIED FILL MATERIAL IN MAXIMUM 1' LIFTS COMPACTED TO NOT LESS THAN 100% MAXIMUM DRY DENSITY AT OPTIMUM MOISTURE IN ACCORDANCE WITH AASHTO T-99. THICKNESS OF LAYERS MAY BE INCREASED PROVIDED THE EQUIPMENT AND METHODS USED ARE PROVEN BY FIELD DENSITY TESTING TO BE CAPABLE OF COMPACTING THICK LAYERS TO SPECIFIED DENSITIES.

3. ALL AREAS SHALL BE CLEARED AND GRUBBED PRIOR TO CONSTRUCTION. THIS SHALL CONSIST OF THE COMPLETE REMOVAL AND DISPOSAL OF ALL TREES, BRUSH, STUMPS, ROOTS, GRASS, WEEDS, RUBBISH AND ALL OTHER OBSTRUCTION RESTING ON OR PROTRUDING THROUGH THE SURFACE OF THE EXISTING GROUND TO A DEPTH OF 1 FOOT. ITEMS DESIGNATED TO REMAIN OR TO BE RELOCATED OR TO BE ADJUSTED SHALL BE SO DESIGNATED ON THE DRAWINGS.

4. FILL MATERIAL SHALL BE CLASSIFIED AS A-1, A-3, or A-2-4 IN ACCORDANCE WITH AASHTO M-145 AND SHALL BE FREE FROM VEGETATION AND ORGANIC MATERIAL. NOT MORE THAN 12% BY WEIGHT OF FILL MATERIAL SHALL PASS THE NO. 200 SIEVE.

5. THE CONTRACTOR SHALL BE RESPONSIBLE FOR PROVIDING CERTIFIED MATERIAL TEST RESULTS TO THE ENGINEER OF RECORD PRIOR TO THE RELEASE OF FINAL CERTIFICATION BY THE ENGINEER. TEST RESULTS MUST INCLUDE, BUT MAY NOT BE LIMITED TO, DENSITIES FOR SUBGRADE AND LIMEROCK, UTILITIES, EXCAVATION, ASPHALT GRADATION REPORTS, CONCRETE CYLINDERS, ETC.

6. ALL INLETS AND PIPE SHALL BE PROTECTED DURING CONSTRUCTION TO PREVENT SILTATION IN THE DRAINAGE SYSTEMS BY WAY OF TEMPORARY PLUGS AND PLYWOOD OR PLASTIC COVERS OVER THE INLETS. THE ENTIRE DRAINAGE SYSTEM SHALL BE CLEANED OF ALL DEBRIS PRIOR TO FINAL ACCEPTANCE.

7. WHERE NEW ASPHALT MEETS EXISTING ASPHALT, THE EXISTING ASPHALT SHALL BE SAWCUT TO PROVIDE A STRAIGHT EVEN LINE. PRIOR TO REMOVING CURB OR GUTTER, THE ADJACENT ASPHALT SHALL BE SAWCUT TO PROVIDE A STRAIGHT EVEN LINE.

8. ALL PROPOSED ELEVATIONS REFER TO FINISHED GRADES.

9. SITE GRADING ELEVATIONS SHALL BE WITHIN 0.1 FOOT OF THE REQUIRED ELEVATION AND ALL AREAS SHALL BE GRADED TO DRAIN.

10. ALL SUBGRADE SHALL HAVE AN LBR OF 40, UNLESS OTHERWISE NOTED, AND SHALL BE COMPACTED TO 100% MAXIMUM DRY DENSITY PER AASHTO T-99.

11. ALL LIMEROCK SHALL BE COMPACTED TO 98% PER AASHTO T-180 AND HAVE NOT LESS THAN 60% OF CARBONATES OF CALCIUM AND MAGNESIUM, UNLESS OTHERWISE DESIGNATED. ALL LIMEROCK SHALL BE PRIMED.

12. ASPHALT SHALL BE OF THE TYPE DESIGNATED ON THE DRAWINGS.

13. PLASTIC FILTER FABRIC SHALL BE MIRAFI, TYPAR OR EQUAL CONFORMING TO SECTION 985 OF THE FDOT STANDARD SPECIFICATIONS.

14. CONCRETE SIDEWALK SHALL BE 4 INCHES THICK ON COMPACTED SUBGRADE, WITH 1/2 INCH EXPANSION JOINTS PLACED AT A MAXIMUM OF 75 FEET. CRACK CONTROL JOINTS SHALL BE 5 FEET ON CENTER. THE BACK OF SIDEWALK ELEVATION SHALL EQUAL THE CROWN OF ROADWAY, UNLESS OTHERWISE SPECIFIED BY LOCAL CODES, OR SHOWN ON THE DRAWINGS. ALL CONCRETE SIDEWALKS THAT CROSS DRIVEWAYS SHALL BE 6 INCHES THICK WITH 6" X 6" (IOG.) WELDED WIRE MESH REINFORCEMENT.

15. PIPE SPECIFICATIONS: THE MATERIAL TYPE IS SHOWN ON THE DRAWINGS BY ONE OF THE FOLLOWING DESIGNATIONS:

RCP	= REINFORCED CONCRETE PIPE, ASTM DESIGNATION C-76, CLASS III, WALL THICKNESS "B", LATEST EDITION.
CMP	= CORRUGATED METAL (ALUMINUM) PIPE, ASTM DESIGNATION M-196 CMP (SMOOTH LINED) = CORRUGATED METAL ALUMINUM PIPE (SMOOTH LINES), ASTM DESIGNATION M-196
SCP	= SLOTTED CONCRETE PIPE, FDOT SECTIONS 941 AND 942.
PVC	= POLYVINYLCHLORIDE PIPE
PCMP	= PERFORATED CMP, FDOT SECTION 945
DIP	= DUCTILE IRON PIPE
HDPEP	= SMOOTH LINED HIGH DENSITY POLYETHYLENE, AASHTO M 294 TYPE S

16. ASPHALTIC CONCRETE TYPE S-III SHALL CONFORM TO THE REQUIREMENTS OF SECTIONS 331-1 THROUGH 331-6 OF F.D.O.T. STANDARD SPECIFICATIONS. ASPHALTIC CONCRETE TYPE S-1 SHALL CONFORM TO THE REQUIREMENTS OF SECTIONS 333-1 THROUGH 333-6 OF F.D.O.T. STANDARD SPECIFICATIONS.

17. ALL CONCRETE SHALL HAVE A MINIMUM COMPRESSIVE STRENGTH OF 3000 PSI AT 28 DAYS, UNLESS OTHERWISE NOTED.

18. CONCRETE FOR PRECAST MANHOLE AND CATCH BASINS SHALL HAVE A MINIMUM COMPRESSIVE STRENGTH OF 4,000 PSI AT 28 DAYS.

19. REINFORCING STEEL FOR MANHOLES AND CATCH BASINS SHALL CONFORM TO ASTM SPECIFICATION A-615 AND A-305, LATEST REVISION.

20. ALL RE-BAR SPLICES IN CONCRETE STRUCTURES SHALL HAVE A MINIMUM LAP OF 24 BAR DIAMETERS.

21. ALL JOINTS IN CONCRETE STRUCTURES SHALL BE FINISHED WATER TIGHT.

22. ALL SPACES AROUND PIPING ENTERING OR LEAVING MANHOLES AND CATCH BASINS SHALL BE COMPLETELY FILLED WITH 2:1 CEMENT MORTAR.

23. JOINTS IN CORRUGATED ALUMINUM PIPE SHALL EMPLOY CORRUGATED METAL BANDS OF SIMILAR METAL AND CORRUGATIONS WITH NEOPRENE, RAM-NEK, OR BITUMASTIC GASKETS INSTALLED PER THE MANUFACTURER'S RECOMMENDATIONS.

24. REINFORCED CONCRETE PIPE SHALL CONFORM TO THE REQUIREMENTS OF ASTM SPECIFICATION C-76, CLASS III, WALL THICKNESS "B", LATEST REVISION, AND AS MODIFIED BY SECTION 941 OF THE FLORIDA DOT STANDARD SPECIFICATIONS, LATEST REVISION.

26. ALL HANDICAP SPACES, RAMPS, AND ACCESS AREAS SHALL COMPLY IN STRICT ACCORDANCE WITH THE "AMERICAN DISABILITY ACT" (ADA) (28 CFR PART 36), AND "ACCESSIBILITY BY HANDICAPPED PERSONS", CHAPTER 553, PART V, FLORIDA STATUTES. ANY DISCREPANCY SHALL BE CALLED TO THE ENGINEER'S ATTENTION PRIOR TO CONSTRUCTION.

27. JOINTS IN HDPE PIPE SHALL BE ADS PRO LINK ST, HANCOR SURE-LOK OR APPROVED EQUAL.

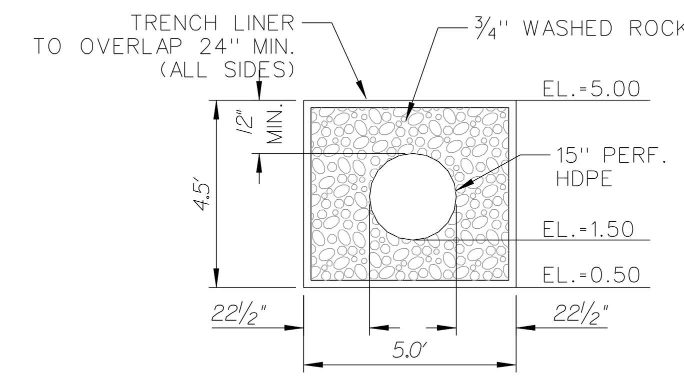

EXFILTRATION TRENCH DETAIL

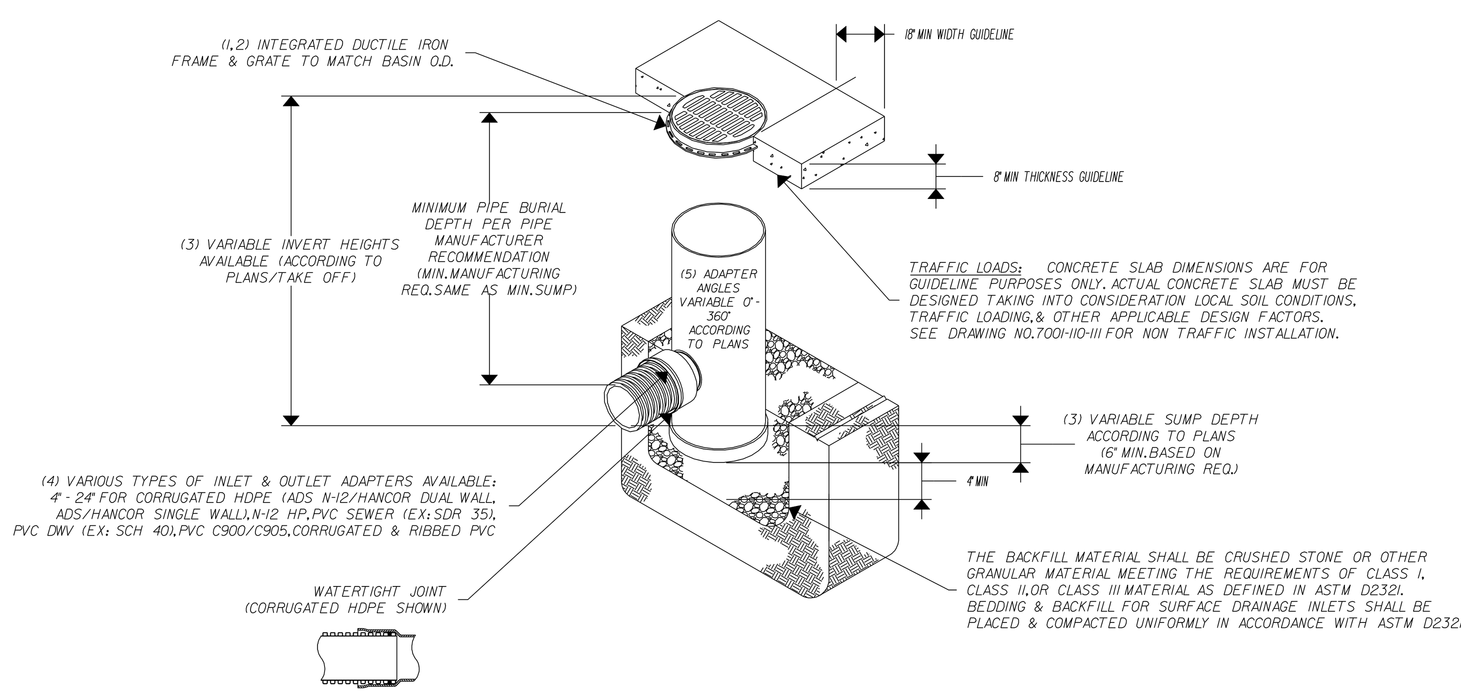

1 - GRATES/SOLID COVER SHALL BE DUCTILE IRON PER ASTM A536 GRADE 70-50-05.
2 - FRAMES SHALL BE DUCTILE IRON PER ASTM A536 GRADE 70-50-05.
3 - DRAIN BASIN TO BE CUSTOM MANUFACTURED ACCORDING TO PLAN DETAILS. RISERS ARE NEEDED FOR BASINS OVER 84" DUE TO SHIPPING RESTRICTIONS. SEE DRAWING NO.7001-110-065.
4 - DRAINAGE CONNECTION STUB JOINT TIGHTNESS SHALL CONFORM TO ASTM D3212 FOR CORRUGATED HDPE (ADS N-12/HANCOR DUAL WALL), N-12 HP & PVC SEWER.
5 - ADAPTERS CAN BE MOUNTED ON ANY ANGLE 0° TO 360°. TO DETERMINE MINIMUM ANGLE BETWEEN ADAPTERS SEE DRAWING NO.7001-110-012.

NYLOPLAST DRAIN BASIN:

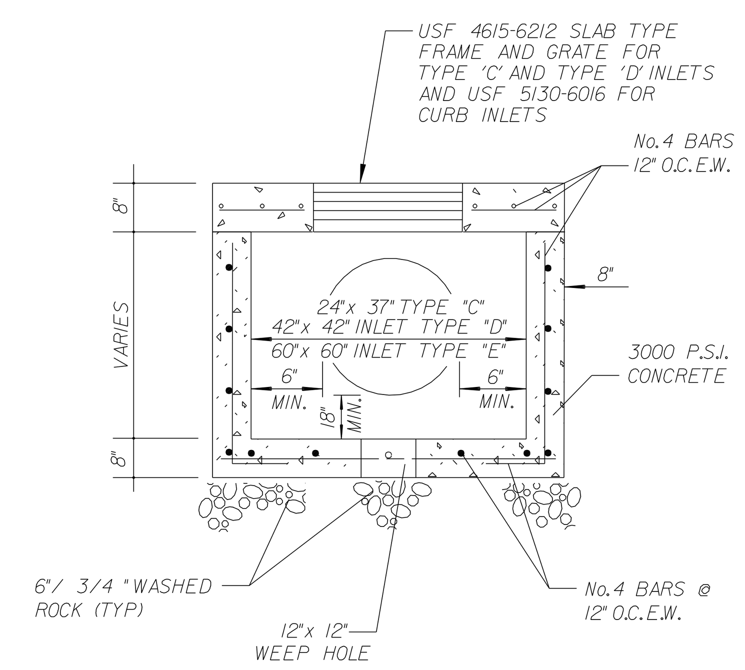

PRECAST INLET DETAIL

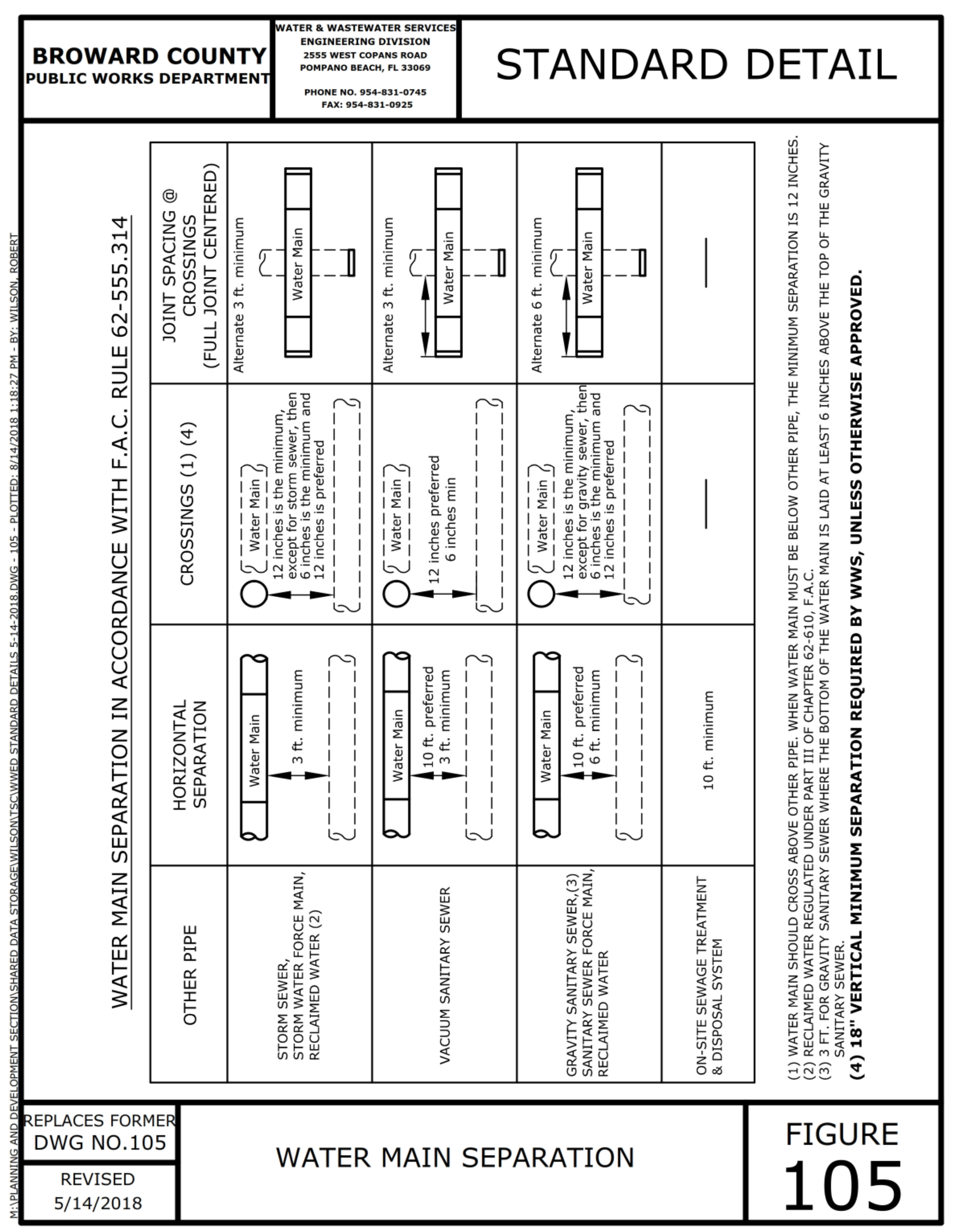

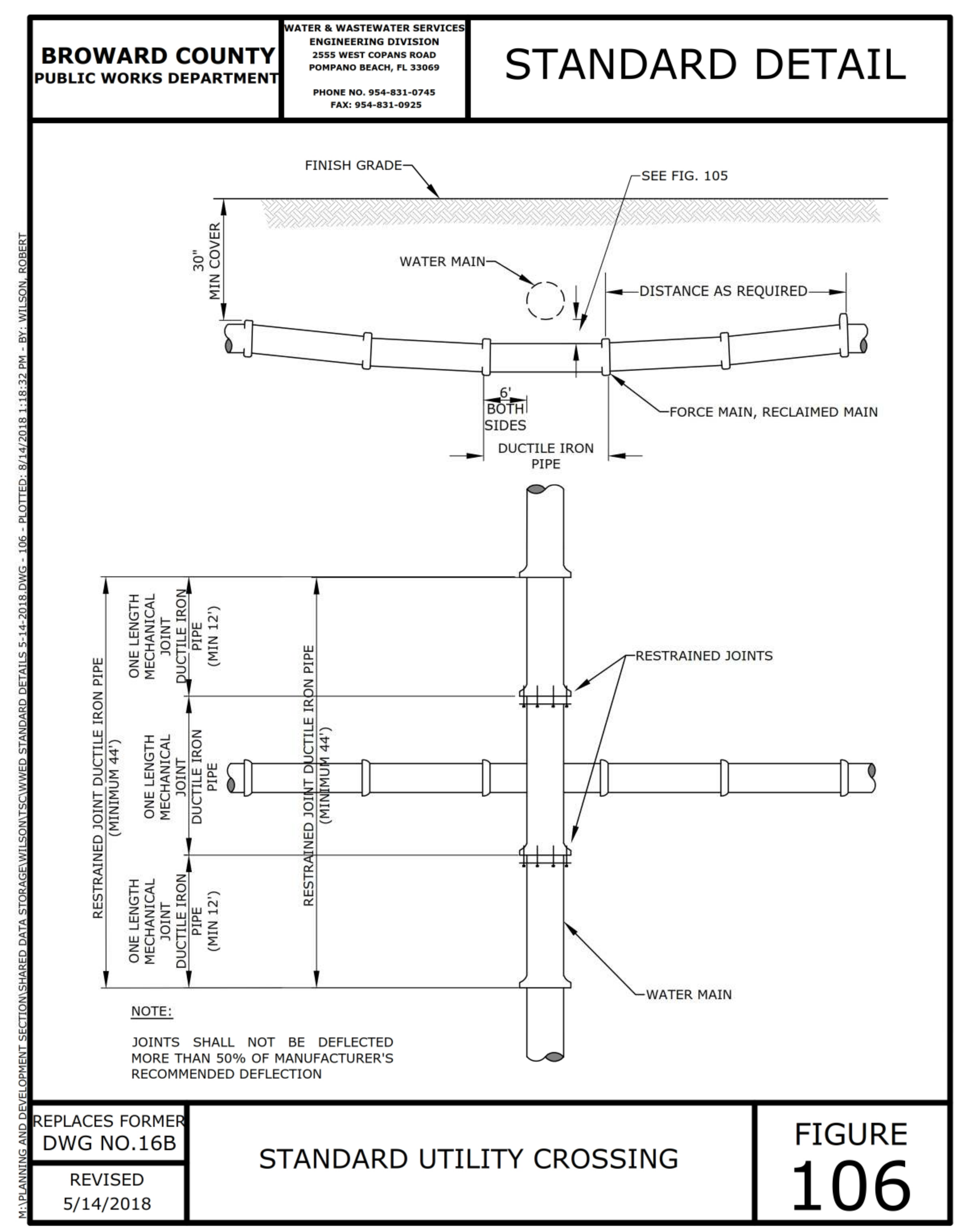

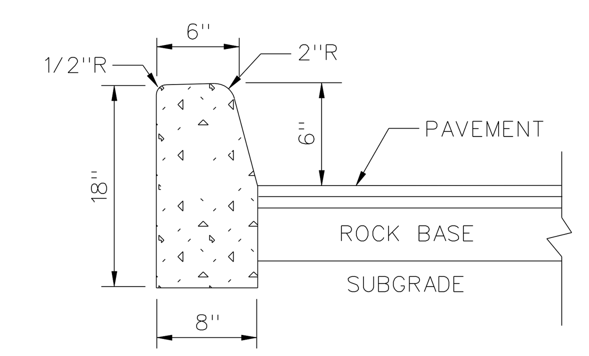

TYPE "D" CURB

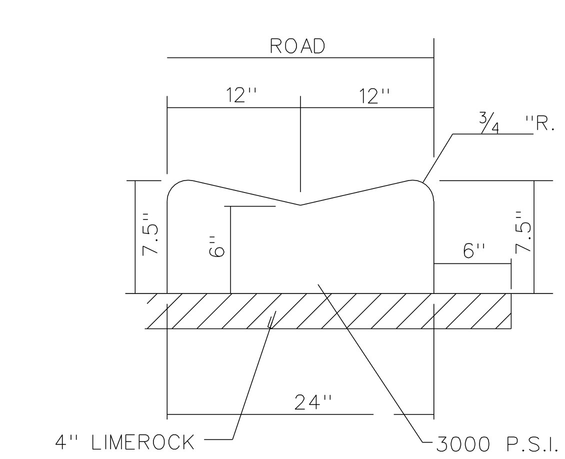

VALLEY GUTTER DETAIL

REVISIONS:
1.
2.
3.
4.
5.
6.
7.
8.

CLIENT:
Kaller Architects
2417 Hollywood Boulevard
Hollywood, Florida 33020-6605
(954) 920-5746

PROJECT:
613 Hallandale Beach Blvd.
HALLANDALE BEACH FLORIDA 33304

TASK:
GENERAL NOTES AND CONSTRUCTION DETAILS

GGB Engineering, Inc.
CIVIL AND FORENSIC ENGINEERS • LAND PLANNERS • CONSTRUCTION MANAGERS
FLORIDA REGISTRATION No. 8118
email: gary@ggbeng.com
2699 Stirling Road, Suite C-202
Fort Lauderdale, Florida 33312
Phone: (954) 986-9899
Fax: (954) 986-6655

DATE:	SCALE:
March 2018	N.T.S.
DESIGNED BY:	DRAWN BY:
G.G.B.	F.M.

PROJECT NO.
18-0425

SHEET
C-3

GARY G. BLOOM, P.E.
FLA LIC. No. 19832
NOT VALID UNLESS SIGNED AND SEALED BY ENGINEER

BROWARD COUNTY
PUBLIC WORKS DEPARTMENT

WATER & WASTEWATER SERVICES
ENGINEERING DIVISION
2555 WEST COPANS ROAD
POMPANO BEACH, FL 33069
PHONE NO. 954-831-0745
FAX: 954-831-0925

STANDARD DETAIL

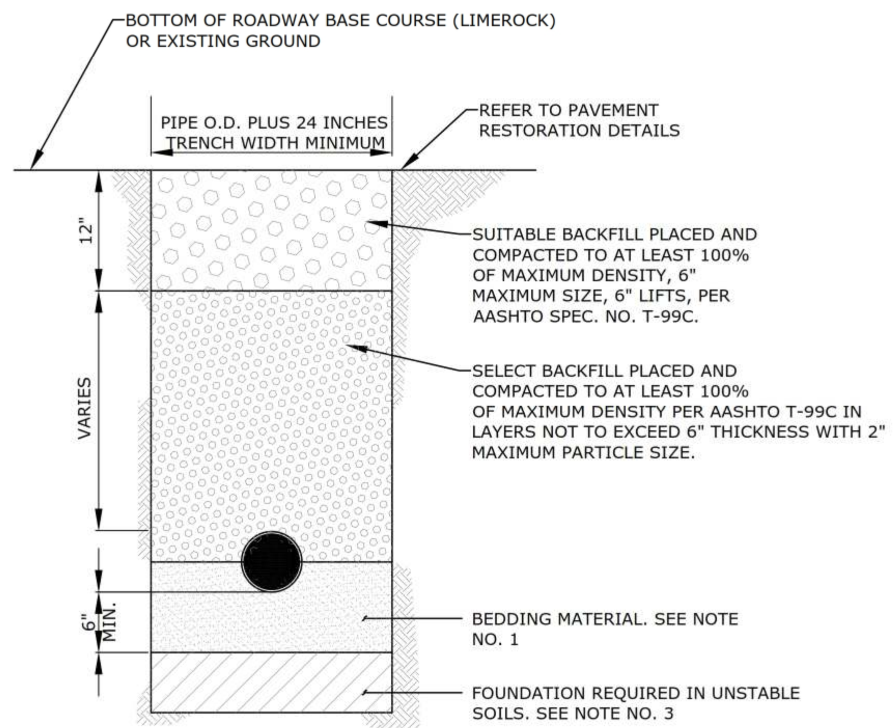

NOTES:

1. UNLESS OTHERWISE SPECIFIED, BEDDING MATERIAL SHALL CONSIST OF SELECT BACKFILL MATERIAL 2" MAXIMUM PARTICLE SIZE, COMPACTED TO AT LEAST 100% OF MAX. DENSITY, 6" LIFTS, PER AASHTO SPEC. NO. T-99C.
2. WHERE REQUIRED, SHEETING AND SHORING SHALL BE IN ACCORDANCE WITH OSHA REQUIREMENTS.
3. WHERE UNSTABLE SOILS ARE ENCOUNTERED, INCLUDING PEAT, MUCK OR OTHER ORGANIC SOILS, ELASTIC SILT AND CLAYS, A FOUNDATION IS REQUIRED AS DETERMINED BY THE ENGINEER OF RECORD.

REPLACES FORMER DWG NO.180	TYPICAL TRENCH BACKFILL	FIGURE 180
REVISED 5/14/2018		

M:\PLANNING AND DEVELOPMENT SECTION\SHARED DATA STORAGE\WILSON\TSC\WWED STANDARD DETAILS 5-14-2018.DWG - 180 - PLOTTED: 8/14/2018 1:19:48 PM - BY: WILSON, ROBERT

BROWARD COUNTY
PUBLIC WORKS DEPARTMENT

WATER & WASTEWATER SERVICES
ENGINEERING DIVISION
2555 WEST COPANS ROAD
POMPANO BEACH, FL 33069
PHONE NO. 954-831-0745
FAX: 954-831-0925

STANDARD DETAIL

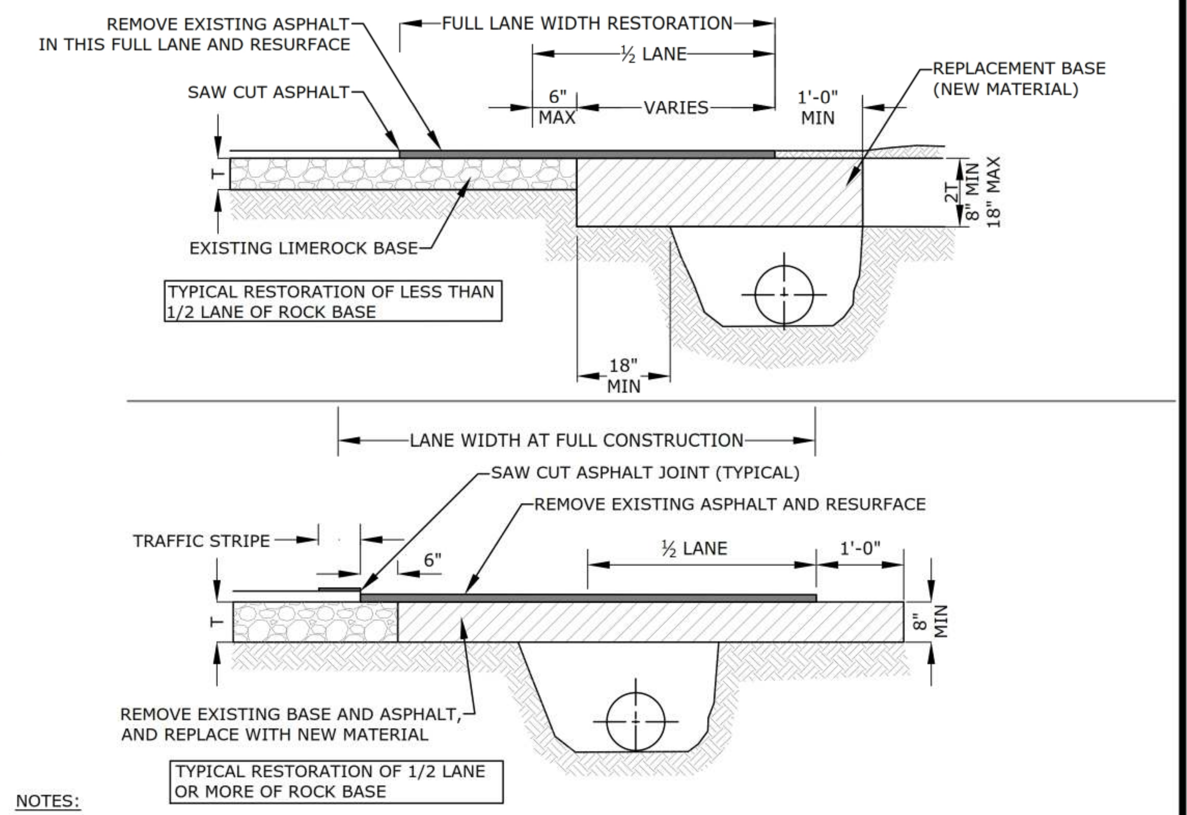

NOTES:

1. BASE MATERIAL SHALL HAVE A MINIMUM LBR OF 100 AND A MINIMUM CARBONATE CONTENT OF 70%.
2. BASE SHALL BE PLACED IN 6" MAXIMUM THICKNESS LAYERS WITH EACH LAYER COMPACTED AS REQUIRED AND TESTED PRIOR TO THE PLACEMENT OF THE SUCCEEDING LAYERS.
3. SUBGRADE MATERIAL SHALL BE GRANULAR AND ANGULAR AND SHALL HAVE A MINIMUM LBR OF 40.
4. BACKFILL SHALL BE PLACED AND COMPACTED IN 6" LAYERS, BUT TESTING WILL BEGIN 12" ABOVE THE INSTALLED UTILITY.
5. ALL EDGES OF EXISTING ASPHALT PAVEMENT THAT ABUT RESURFACING SHALL BE SAW CUT IN STRAIGHT LINES PARALLEL TO OR PERPENDICULAR TO THE ROADWAY, PRIOR TO RESURFACING.
6. RESURFACING MATERIAL SHALL BE CONSISTENT WITH SURROUNDING SURFACE, AND SHALL BE APPLIED IN 2 LIFTS, A MINIMUM OF ¾ INCH.
7. TRAFFIC STRIPES SHALL NOT BE PLACED DIRECTLY ON TOP OF THE JOINT
8. FOR STATE ROADS REFER TO FDOT SPECIFICATIONS AND REQUIREMENTS.

T = EXISTING LIMEROCK BASE THICKNESS.

REPLACES FORMER DWG NO.19A	RESTORATION OF ROADWAY CUT FOR PARALLEL UTILITY INSTALLATION	FIGURE 182
REVISED 5/14/2018		

M:\PLANNING AND DEVELOPMENT SECTION\SHARED DATA STORAGE\WILSON\TSC\WWED STANDARD DETAILS 5-14-2018.DWG - 182 - PLOTTED: 8/14/2018 1:19:53 PM - BY: WILSON, ROBERT

BROWARD COUNTY
PUBLIC WORKS DEPARTMENT

WATER & WASTEWATER SERVICES
ENGINEERING DIVISION
2555 WEST COPANS ROAD
POMPANO BEACH, FL 33069
PHONE NO. 954-831-0745
FAX: 954-831-0925

STANDARD DETAIL

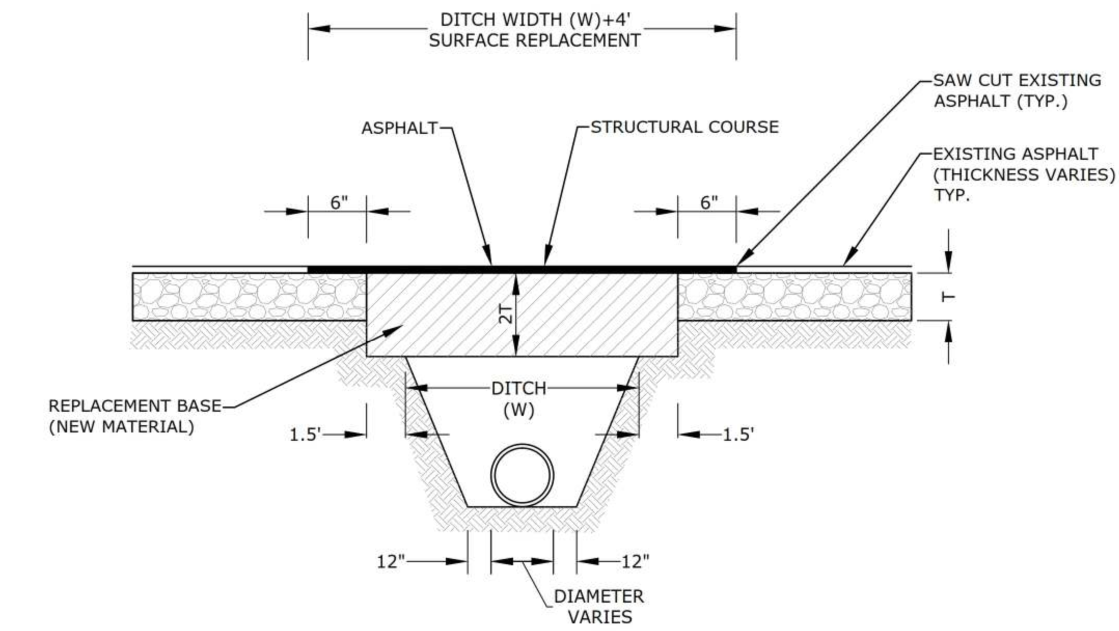

NOTES:

1. BASE MATERIAL OVER DITCH SHALL BE TWICE THE THICKNESS OF THE ORIGINAL.
2. BASE MATERIAL SHALL BE PLACED IN 6" MAXIMUM LAYERS (LOOSE MEASUREMENT) AND EACH LAYER THOROUGHLY ROLLED OR TAMPED TO 98% OF MAXIMUM DENSITY, PER AASHTO T-180.
3. ASPHALT CONCRETE PAVEMENT JOINTS SHALL BE MECHANICALLY SAW CUT.
4. SURFACE MATERIAL SHALL BE CONSISTENT WITH THE SURROUNDING SURFACE MATERIAL.
5. BASE MATERIAL SHALL HAVE A MINIMUM CARBONATE OF 70%.
6. SUB GRADE MATERIAL SHALL BE GRANULAR AND ANGULAR AND SHALL HAVE A MINIMUM LBR OF 40.
7. IF THE DITCH IS FILLED TEMPORARILY, IT SHALL BE COVERED WITH A 2" THICK ASPHALT CONCRETE PATCH TO KEEP THE FILL MATERIAL FROM RAVELING, UNTIL REPLACED WITH A PERMANENT PATCH.
8. FOR STATE ROADS REFER TO FDOT SPECIFICATIONS AND REQUIREMENTS.

T = EXISTING LIMEROCK BASE THICKNESS.

REPLACES FORMER DWG NO.19B	RESTORATION OF ROADWAY CUT FOR PERPENDICULAR UTILITY INSTALLATION	FIGURE 183
REVISED 5/14/2018		

M:\PLANNING AND DEVELOPMENT SECTION\SHARED DATA STORAGE\WILSON\TSC\WWED STANDARD DETAILS 5-14-2018.DWG - 183 - PLOTTED: 8/14/2018 1:19:57 PM - BY: WILSON, ROBERT

BROWARD COUNTY
PUBLIC WORKS DEPARTMENT

WATER & WASTEWATER SERVICES
ENGINEERING DIVISION
2555 WEST COPANS ROAD
POMPANO BEACH, FL 33069
PHONE NO. 954-831-0745
FAX: 954-831-0925

STANDARD DETAIL

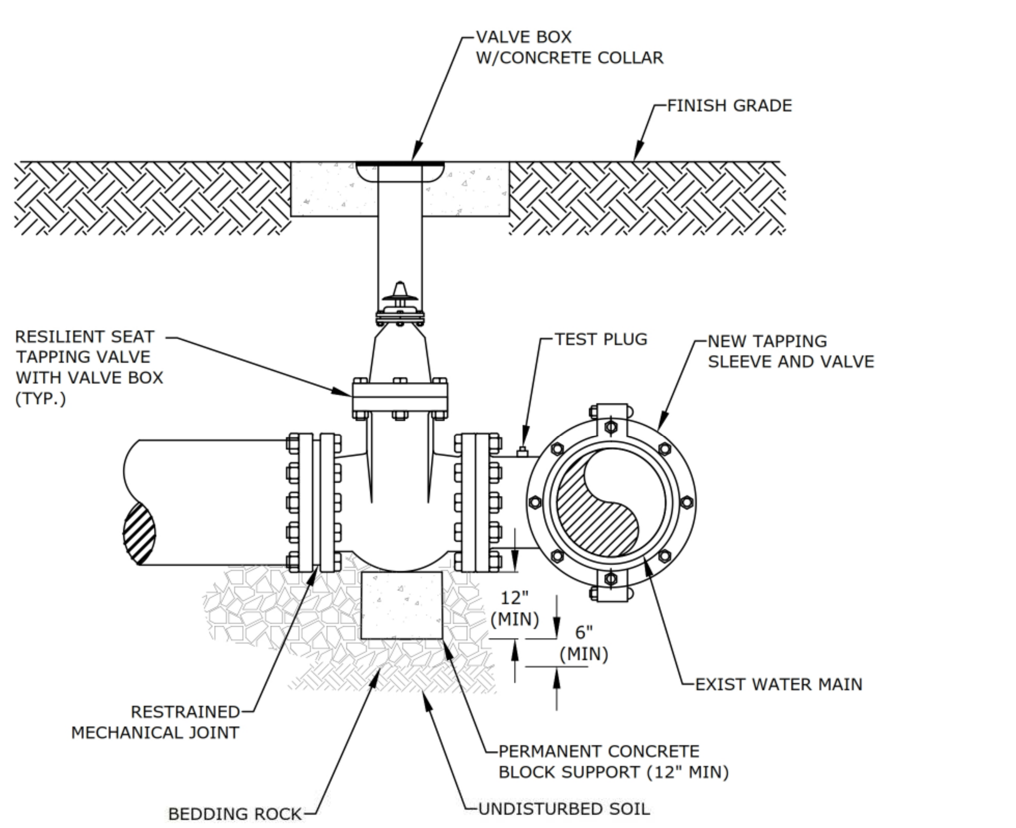

NOTES:

1. REFER TO WWS MINIMUM DESIGN AND CONSTRUCTION STANDARDS FOR MINIMUM REQUIREMENTS AND PRE-APPROVED MANUFACTURERS.
2. MAIN SHALL BE CLEANED BEFORE ATTACHING SLEEVE
3. SLEEVE AND VALVE SHALL BE PRESSURE TESTED BEFORE MAKING TAP. PRESSURE TEST AND TAP SHALL BE MADE IN PRESENCE OF AN AUTHORIZED COUNTY REPRESENTATIVE.
4. TAP SHALL BE MADE NO CLOSER THAN 18" FROM THE NEAREST JOINT.
5. CONCRETE BLOCK SHALL COMPLETELY SUPPORT TAPPING VALVE.
6. RESTRAINT JOINT REQUIREMENTS SHALL BE IN ACCORDANCE WITH WWS MINIMUM DESIGN AND CONSTRUCTION STANDARDS.

	TAPPING SLEEVE AND VALVE INSTALLATION	FIGURE 196
REVISED 5/14/2018		

M:\PLANNING AND DEVELOPMENT SECTION\SHARED DATA STORAGE\WILSON\TSC\WWED STANDARD DETAILS 5-14-2018.DWG - 196 - PLOTTED: 8/14/2018 1:20:18 PM - BY: WILSON, ROBERT

BROWARD COUNTY
PUBLIC WORKS DEPARTMENT

WATER & WASTEWATER SERVICES
ENGINEERING DIVISION
2555 WEST COPANS ROAD
POMPANO BEACH, FL 33069
PHONE NO. 954-831-0745
FAX: 954-831-0925

STANDARD DETAIL

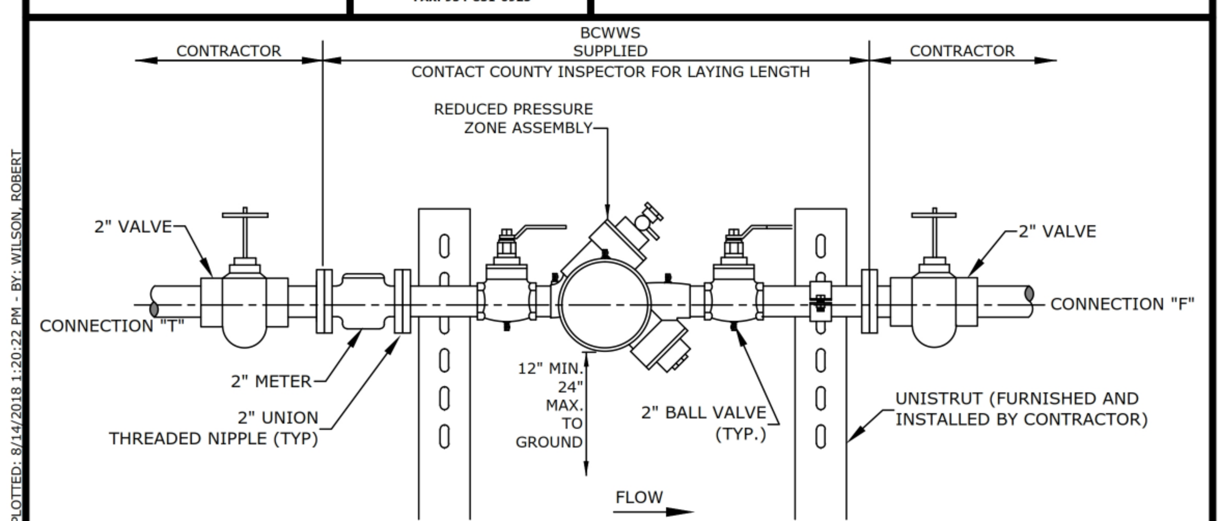

JUMPER ASSEMBLY

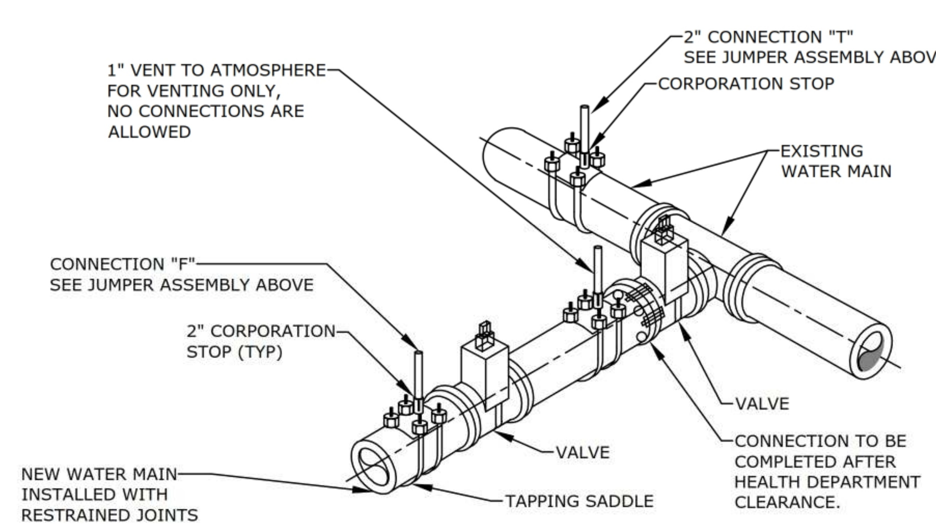

NOTES:

1. A BCWWS SUPPLIED FIRE HYDRANT BACKFLOW METER WITH RPZ MAY BE USED IN LIEU OF THE JUMPER ASSEMBLY.
2. SEE DETAIL 205B FOR ADDITIONAL REQUIREMENTS.

REPLACES FORMER DWG NO.7	FILLING AND FLUSHING JUMPER CONNECTION	FIGURE 205A
REVISED 5/14/2018		

M:\PLANNING AND DEVELOPMENT SECTION\SHARED DATA STORAGE\WILSON\TSC\WWED STANDARD DETAILS 5-14-2018.DWG - 205 A - PLOTTED: 8/14/2018 1:20:22 PM - BY: WILSON, ROBERT

BROWARD COUNTY
PUBLIC WORKS DEPARTMENT

WATER & WASTEWATER SERVICES
ENGINEERING DIVISION
2555 WEST COPANS ROAD
POMPANO BEACH, FL 33069
PHONE NO. 954-831-0745
FAX: 954-831-0925

STANDARD DETAIL

1. A FILLING AND FLUSHING JUMPER ASSEMBLY CONNECTION IS REQUIRED AT ALL CONNECTIONS BETWEEN EXISTING ACTIVE BCWWS WATER MAINS AND NEW WATER MAINS. THE PROCEDURES ARE APPLICABLE WHEN CONNECTING TO AN EXISTING BCWWS WATER MAIN, WHETHER BY TAPPING TEE AND VALVE OR BY CONTINUATION OF A PLUGGED STUB OUT WITH AN EXISTING GATE VALVE.
2. THE CONTRACTOR SHALL CONTACT BCWWS REGARDING SCHEDULING OF REQUIRED INSPECTIONS RELATING TO THE CONNECTION. BCWWS INSPECTIONS ARE SPECIFICALLY REQUIRED FOR TIE-INS OR WET TAPS TO EXISTING WATER MAINS, JUMPER ASSEMBLY CONNECTION INSTALLATION, FLUSHING, PRESSURE TESTING, DISINFECTION, SAMPLING, PLUGGING OF SAMPLING POINTS AND PERMANENT CONNECTION OF THE NEW WATER MAIN. THE CONTRACTOR SHALL FOLLOW ALL PROCEDURES STRICTLY IN ACCORDANCE WITH BCWWS STANDARDS.
3. THE JUMPER ASSEMBLY (2" DIAMETER FLANGE TO FLANGE) WILL BE SUPPLIED BY BCWWS AND INSTALLED AND TESTED BY THE CONTRACTOR, IN COORDINATION WITH THE ENGINEER OF RECORD (EOR) AND BCWWS. OTHER MATERIALS AND INSTALLATION REQUIRED FOR THE CONNECTION ARE THE RESPONSIBILITY OF THE CONTRACTOR. THE UNDERGROUND FITTINGS SHALL BE RESTRAINED MECHANICAL JOINT TYPE. ALL MATERIALS SHALL BE PER THE BCWWS APPROVED PRODUCT SPECIFICATION SHEETS. THE JUMPER SHALL BE MAINTAINED BY THE CONTRACTOR UNTIL IT IS REMOVED. JUMPER ASSEMBLIES 3" AND LARGER SHALL BE SUPPLIED AND INSTALLED BY THE CONTRACTOR IN COORDINATION WITH BCWWS.
4. ALL NEW WATER MAINS SHALL BE FLUSHED, PRESSURE TESTED AND DISINFECTED. NEW MAINS SHALL NOT BE PLACED INTO SERVICE UNTIL THE BACTERIOLOGICAL TEST RESULTS ARE SATISFACTORY AND A WRITTEN APPROVAL HAS BEEN OBTAINED FROM BCWWS, AS WELL AS CERTIFICATION FROM THE FLORIDA DEPARTMENT OF HEALTH.
5. THE WATER MAINS SHALL BE PRESSURE TESTED AFTER FLUSHING AND PRIOR TO DISINFECTION. ALL VALVES SHALL REMAIN CLOSED DURING THE PRESSURE TEST AND WILL NOT BE OPENED UNTIL THE RESULTS OF PRESSURE TESTING AND BACTERIOLOGICAL TESTING ARE SATISFACTORY AND THE SYSTEM HAS BEEN ACCEPTED FOR OPERATION BY BCWWS, AND HAS RECEIVED CERTIFICATION FROM THE FLORIDA DEPARTMENT OF HEALTH.
6. DISINFECTION SHALL BE CONDUCTED IN ACCORDANCE WITH AWWA C651. A MINIMUM PRESSURE OF 25 PSI SHALL BE MAINTAINED IN THE NEW MAIN AFTER DISINFECTION AT ALL TIMES.
7. PERMANENT CONNECTION TO EXISTING MAINS BY OPENING OF MAIN VALVES SHALL NOT BE MADE PRIOR TO BACTERIOLOGICAL CLEARANCE AND UNTIL APPROVED BY BCWWS AND CERTIFIED BY THE FLORIDA DEPARTMENT OF HEALTH.
8. UPON BACTERIOLOGICAL CLEARANCE, THE SAMPLING POINTS SHALL BE REMOVED AND PLUGGED BY THE CONTRACTOR. THE CONTRACTOR SHALL MAKE THE PERMANENT CONNECTION IN THE PRESENCE OF A BCWWS INSPECTOR. THE PIPE AND FITTINGS FOR CONNECTION SHALL BE DISINFECTED BY SPRAYING AND SWABBING WITH CHLORINE. THE JUMPER ASSEMBLY (FLANGE TO FLANGE) WILL BE REMOVED BY THE CONTRACTOR IN COORDINATION WITH BCWWS. THE CONTRACTOR SHALL REMOVE THE REMAINDER OF THE JUMPER CONNECTION PIPING AND PLUG THE CORPORATION STOP VALVES.

REPLACES FORMER 205	FILLING AND FLUSHING JUMPER CONNECTION	FIGURE 205B
REVISED 5/14/2018		

M:\PLANNING AND DEVELOPMENT SECTION\SHARED DATA STORAGE\WILSON\TSC\WWED STANDARD DETAILS 5-14-2018.DWG - 205B - PLOTTED: 8/14/2018 1:20:28 PM - BY: WILSON, ROBERT

REVISIONS: 1. 2. 3. 4. 5. 6. 7. 8.

CLIENT:
Kaller Architects
2417 Hollywood Boulevard
Hollywood, Florida 33020-6605
(954) 920-5746

PROJECT:
613 Hallandale Beach Blvd.
HALLANDALE BEACH FLORIDA 33304

TASK:
CONSTRUCTION DETAILS

GGB Engineering, Inc.
CIVIL AND FORENSIC ENGINEERS • LAND PLANNERS • CONSTRUCTION MANAGERS
FLORIDA REGISTRATION No. 8118
email: gary@ggbeng.com
2699 Stirling Road, Suite C-202
Fort Lauderdale, Florida 33312
Phone: (954) 986-9899
Fax: (954) 986-6655

DATE:	SCALE:
March 2018	N.T.S.
DESIGNED BY:	DRAWN BY:
G.G.B.	F.M.
PROJECT NO. 18-0425	
SHEET C-4	

GARY G. BLOOM, P.E.
FLA LIC. No. 19832
NOT VALID UNLESS SIGNED AND SEALED BY ENGINEER

BROWARD COUNTY
PUBLIC WORKS DEPARTMENT

WATER & WASTEWATER SERVICES
ENGINEERING DIVISION
2555 WEST COPANS ROAD
POMPANO BEACH, FL 33069

PHONE NO. 954-831-0745
FAX: 954-831-0925

STANDARD DETAIL

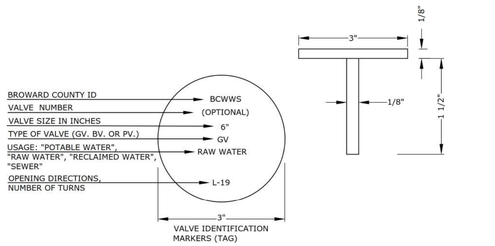

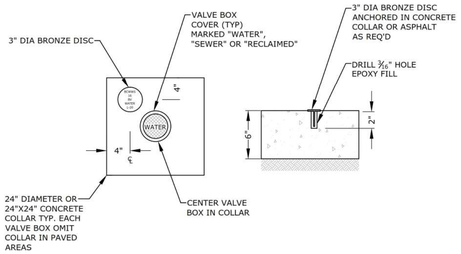

REPLACES FORMER DWG NO.3E
REVISED 5/14/2018

VALVE COLLAR AND IDENTIFICATION MARKER

FIGURE 121

M:\PLANNING AND DEVELOPMENT SECTION\SHARED DATA STORAGE\WUS\CONTSC\WUSD STANDARD DETAILS 5-14-2018.DWG - 121 - PLOTTED: 8/14/2018 1:18:57 PM - BY: WILSON, ROBERT

BROWARD COUNTY
PUBLIC WORKS DEPARTMENT

WATER & WASTEWATER SERVICES
ENGINEERING DIVISION
2555 WEST COPANS ROAD
POMPANO BEACH, FL 33069

PHONE NO. 954-831-0745
FAX: 954-831-0925

STANDARD DETAIL

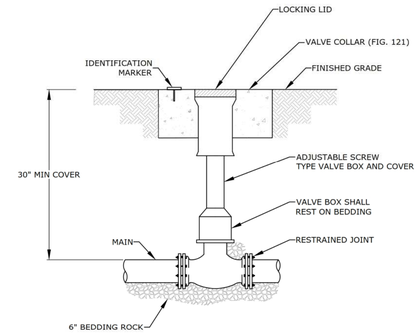

1. WHEN VALVE IS NOT LOCATED IN PAVEMENT, PLACE A WHITE REFLECTIVE RAISED PAVEMENT MARKER IN THE DRIVE LANE, ADJACENT TO THE VALVE.
2. OPERATOR EXTENSION SHAFT SHALL BE PROVIDED WHEN OPERATING NUT IS MORE THAN 24" BELOW TOP OF VALVE BOX.
3. PVC PIPE OR DUCTILE IRON PIPE IS NOT ACCEPTABLE FOR VALVE BOX RISER.

REPLACES FORMER DWG NO.123
REVISED 5/14/2018

VALVE BOX DETAIL

FIGURE 123

M:\PLANNING AND DEVELOPMENT SECTION\SHARED DATA STORAGE\WUS\CONTSC\WUSD STANDARD DETAILS 5-14-2018.DWG - 123 - PLOTTED: 8/14/2018 1:18:57 PM - BY: WILSON, ROBERT

BROWARD COUNTY
PUBLIC WORKS DEPARTMENT

WATER & WASTEWATER SERVICES
ENGINEERING DIVISION
2555 WEST COPANS ROAD
POMPANO BEACH, FL 33069

PHONE NO. 954-831-0745
FAX: 954-831-0925

STANDARD DETAIL

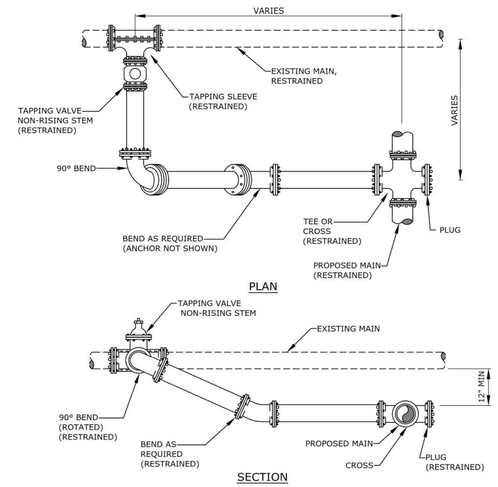

ALL JOINTS TO BE RESTRAINED BY APPROVED METHODS.

REPLACES FORMER DWG NO.131
REVISED 5/14/2018

TYPICAL CONNECTION TO EXISTING MAIN

FIGURE 131

M:\PLANNING AND DEVELOPMENT SECTION\SHARED DATA STORAGE\WUS\CONTSC\WUSD STANDARD DETAILS 5-14-2018.DWG - 131 - PLOTTED: 8/14/2018 1:19:07 PM - BY: WILSON, ROBERT

BROWARD COUNTY
PUBLIC WORKS DEPARTMENT

WATER & WASTEWATER SERVICES
ENGINEERING DIVISION
2555 WEST COPANS ROAD
POMPANO BEACH, FL 33069

PHONE NO. 954-831-0745
FAX: 954-831-0925

STANDARD DETAIL

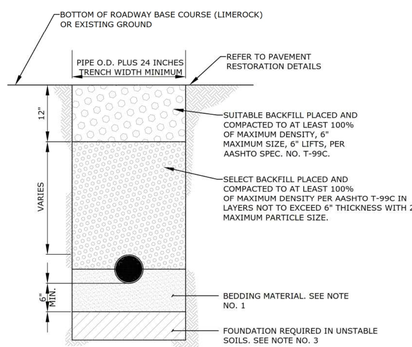

NOTES:

1. UNLESS OTHERWISE SPECIFIED, BEDDING MATERIAL SHALL CONSIST OF SELECT BACKFILL MATERIAL 2" MAXIMUM PARTICLE SIZE, COMPACTED TO AT LEAST 100% OF MAX. DENSITY, 6" LIFTS, PER AASHTO SPEC. NO. T-99C.
2. WHERE REQUIRED, SHEETING AND SHORING SHALL BE IN ACCORDANCE WITH OSHA REQUIREMENTS.
3. WHERE UNSTABLE SOILS ARE ENCOUNTERED, INCLUDING PEAT, MUCK OR OTHER ORGANIC SOILS, ELASTIC SILT AND CLAYS, A FOUNDATION IS REQUIRED AS DETERMINED BY THE ENGINEER OF RECORD.

REPLACES FORMER DWG NO.180
REVISED 5/14/2018

TYPICAL TRENCH BACKFILL

FIGURE 180

M:\PLANNING AND DEVELOPMENT SECTION\SHARED DATA STORAGE\WUS\CONTSC\WUSD STANDARD DETAILS 5-14-2018.DWG - 180 - PLOTTED: 8/14/2018 1:19:33 PM - BY: WILSON, ROBERT

BROWARD COUNTY
PUBLIC WORKS DEPARTMENT

WATER & WASTEWATER SERVICES
ENGINEERING DIVISION
2555 WEST COPANS ROAD
POMPANO BEACH, FL 33069

PHONE NO. 954-831-0745
FAX: 954-831-0925

STANDARD DETAIL

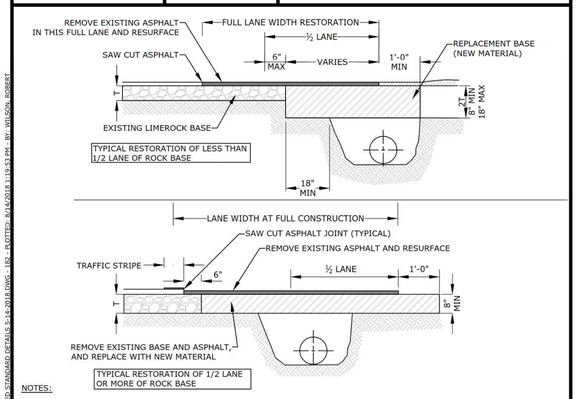

NOTES:

1. BASE MATERIAL SHALL HAVE A MINIMUM LBR OF 100 AND A MINIMUM CARBONATE CONTENT OF 70%.
2. BASE SHALL BE PLACED IN 6" MAXIMUM THICKNESS LAYERS WITH EACH LAYER COMPACTED AS REQUIRED AND TESTED PRIOR TO THE PLACEMENT OF THE SUCCEEDING LAYERS.
3. SUBGRADE MATERIAL SHALL BE GRANULAR AND ANGULAR AND SHALL HAVE A MINIMUM LBR OF 40.
4. BACKFILL SHALL BE PLACED AND COMPACTED IN 6" LAYERS, BUT TESTING WILL BEGIN 12" ABOVE THE INSTALLED UTILITY.
5. ALL EDGES OF EXISTING ASPHALT PAVEMENT THAT ABUT RESURFACING SHALL BE SAW CUT IN STRAIGHT LINES PARALLEL TO OR PERPENDICULAR TO THE ROADWAY, PRIOR TO RESURFACING.
6. RESURFACING MATERIAL SHALL BE CONSISTENT WITH SURROUNDING SURFACE, AND SHALL BE APPLIED IN 2 LIFTS, A MINIMUM OF ¾ INCH.
7. TRAFFIC STRIPES SHALL NOT BE PLACED DIRECTLY ON TOP OF THE JOINT
8. FOR STATE ROADS REFER TO FDOT SPECIFICATIONS AND REQUIREMENTS.

T = EXISTING LIMEROCK BASE THICKNESS.

REPLACES FORMER DWG NO.19A
REVISED 5/14/2018

RESTORATION OF ROADWAY CUT FOR PARALLEL UTILITY INSTALLATION

FIGURE 182

M:\PLANNING AND DEVELOPMENT SECTION\SHARED DATA STORAGE\WUS\CONTSC\WUSD STANDARD DETAILS 5-14-2018.DWG - 182 - PLOTTED: 8/14/2018 1:19:42 PM - BY: WILSON, ROBERT

BROWARD COUNTY
PUBLIC WORKS DEPARTMENT

WATER & WASTEWATER SERVICES
ENGINEERING DIVISION
2555 WEST COPANS ROAD
POMPANO BEACH, FL 33069

PHONE NO. 954-831-0745
FAX: 954-831-0925

STANDARD DETAIL

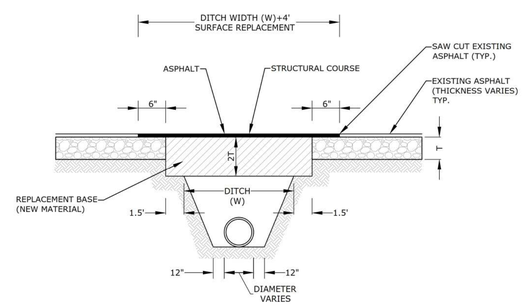

NOTES:

1. BASE MATERIAL OVER DITCH SHALL BE TWICE THE THICKNESS OF THE ORIGINAL.
2. BASE MATERIAL SHALL BE PLACED IN 6" MAXIMUM LAYERS (LOOSE MEASUREMENT) AND EACH LAYER THOROUGHLY ROLLED OR TAMPED TO 98% OF MAXIMUM DENSITY, PER AASHTO T-180.
3. ASPHALT CONCRETE PAVEMENT JOINTS SHALL BE MECHANICALLY SAW CUT.
4. SURFACE MATERIAL SHALL BE CONSISTENT WITH THE SURROUNDING SURFACE MATERIAL.
5. BASE MATERIAL SHALL HAVE A MINIMUM CARBONATE OF 70%.
6. SUB GRADE MATERIAL SHALL BE GRANULAR AND ANGULAR AND SHALL HAVE A MINIMUM LBR OF 40.
7. IF THE DITCH IS FILLED TEMPORARILY, IT SHALL BE COVERED WITH A 2" THICK ASPHALT CONCRETE PATCH TO KEEP THE FILL MATERIAL FROM RAVELING, UNTIL REPLACED WITH A PERMANENT PATCH.
8. FOR STATE ROADS REFER TO FDOT SPECIFICATIONS AND REQUIREMENTS.

T = EXISTING LIMEROCK BASE THICKNESS.

REPLACES FORMER DWG NO.19B
REVISED 5/14/2018

RESTORATION OF ROADWAY CUT FOR PERPENDICULAR UTILITY INSTALLATION

FIGURE 183

M:\PLANNING AND DEVELOPMENT SECTION\SHARED DATA STORAGE\WUS\CONTSC\WUSD STANDARD DETAILS 5-14-2018.DWG - 183 - PLOTTED: 8/14/2018 1:19:49 PM - BY: WILSON, ROBERT

REVISIONS:
1.
2.
3.
4.
5.
6.
7.
8.

CLIENT:
Kaller Architects
2417 Hollywood Boulevard
Hollywood, Florida 33020-6605
(954) 920-5746

PROJECT:
613 Hallandale Beach Blvd.
HALLANDALE BEACH FLORIDA 33304

TASK:
CONSTRUCTION DETAILS

GGB Engineering, Inc.
CIVIL AND FORENSIC ENGINEERS • LAND PLANNERS • CONSTRUCTION MANAGERS
FLORIDA REGISTRATION No. 8118
email: gary@ggbeng.com
Phone: (954) 986-0999
Fax: (954) 986-8635
2699 Stirling Road, Suite C-202
Fort Lauderdale, Florida 33312

DATE:	SCALE:
March 2018	N.T.S.
DESIGNED BY: G.G.B.	DRAWN BY: F.M.

PROJECT NO. 18-0425

SHEET C-5

GARY G. BLOOM, P.E.
FLA LIC. No. 39832
NOT VALID UNLESS SIGNED AND SEALED BY ENGINEER

STANDARD DETAIL — FIGURE 196

BROWARD COUNTY PUBLIC WORKS DEPARTMENT

WATER & WASTEWATER SERVICES ENGINEERING DIVISION 2555 WEST COPANS ROAD POMPANO BEACH, FL 33069 PHONE NO. 954-831-0745 FAX: 954-831-0925

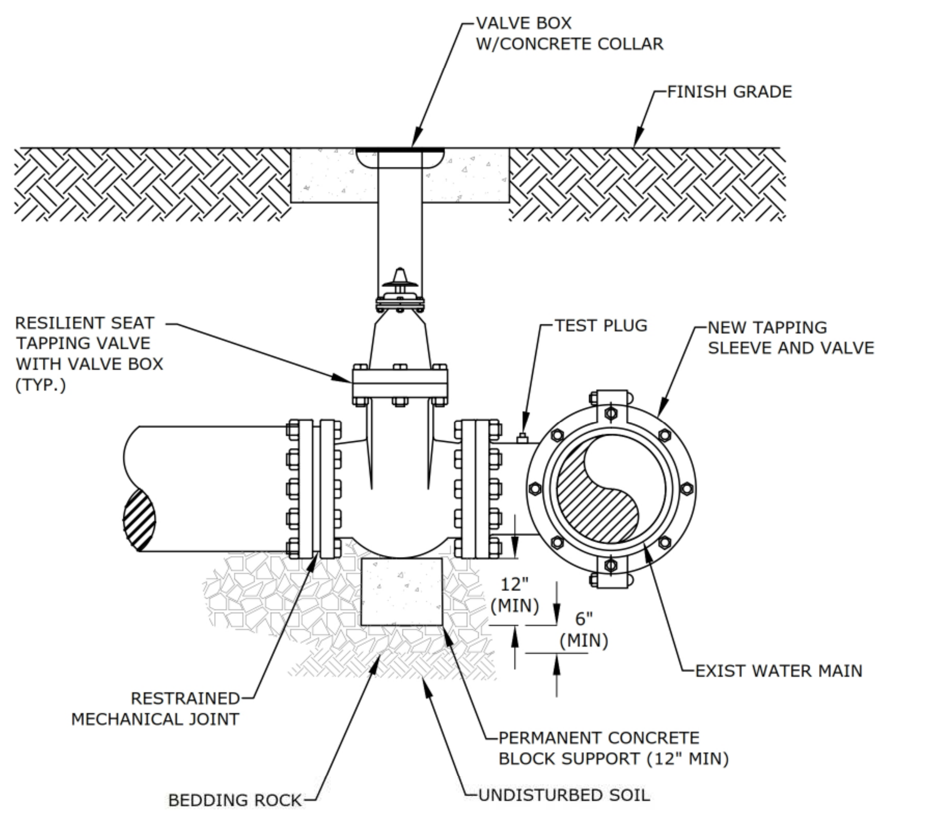

NOTES:

1. REFER TO WWS MINIMUM DESIGN AND CONSTRUCTION STANDARDS FOR MINIMUM REQUIREMENTS AND PRE-APPROVED MANUFACTURERS.
2. MAIN SHALL BE CLEANED BEFORE ATTACHING SLEEVE
3. SLEEVE AND VALVE SHALL BE PRESSURE TESTED BEFORE MAKING TAP. PRESSURE TEST AND TAP SHALL BE MADE IN PRESENCE OF AN AUTHORIZED COUNTY REPRESENTATIVE.
4. TAP SHALL BE MADE NO CLOSER THAN 18" FROM THE NEAREST JOINT.
5. CONCRETE BLOCK SHALL COMPLETELY SUPPORT TAPPING VALVE.
6. RESTRAINT JOINT REQUIREMENTS SHALL BE IN ACCORDANCE WITH WWS MINIMUM DESIGN AND CONSTRUCTION STANDARDS.

REVISED 5/14/2018 | TAPPING SLEEVE AND VALVE INSTALLATION | FIGURE 196

M:\PLANNING AND DEVELOPMENT SECTION\SHARED DATA STORAGE\WILSON\TSC\WWED STANDARD DETAILS 5-14-2018.DWG - 196 - PLOTTED: 8/14/2018 1:20:18 PM - BY: WILSON, ROBERT

STANDARD DETAIL — FIGURE 205A

BROWARD COUNTY PUBLIC WORKS DEPARTMENT

WATER & WASTEWATER SERVICES ENGINEERING DIVISION 2555 WEST COPANS ROAD POMPANO BEACH, FL 33069 PHONE NO. 954-831-0745 FAX: 954-831-0925

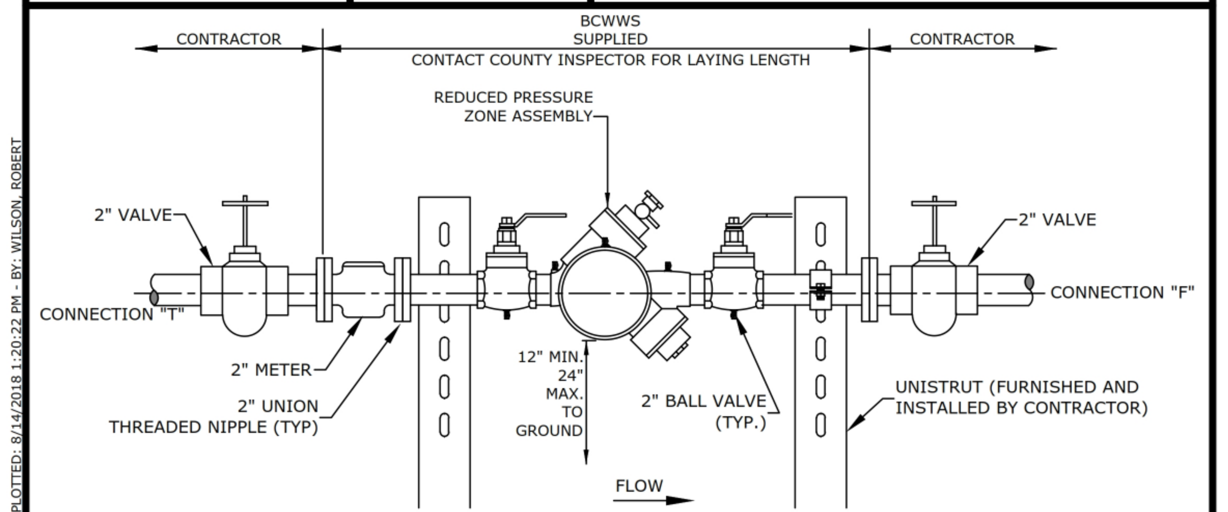

JUMPER ASSEMBLY

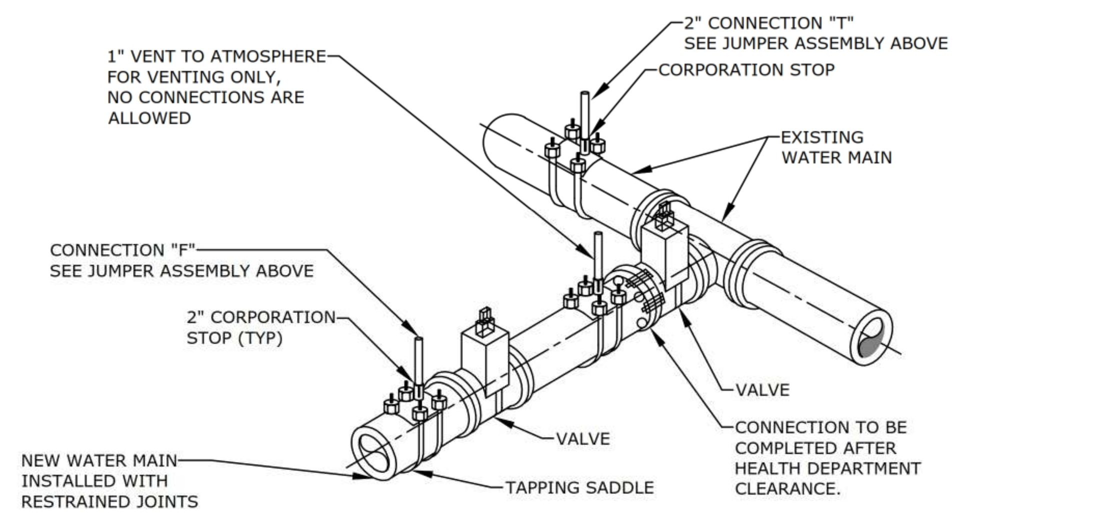

NOTES:
1. A BCWWS SUPPLIED FIRE HYDRANT BACKFLOW METER WITH RPZ MAY BE USED IN LIEU OF THE JUMPER ASSEMBLY.
2. SEE DETAIL 205B FOR ADDITIONAL REQUIREMENTS.

REPLACES FORMER DWG NO.7 | REVISED 5/14/2018 | FILLING AND FLUSHING JUMPER CONNECTION | FIGURE 205A

M:\PLANNING AND DEVELOPMENT SECTION\SHARED DATA STORAGE\WILSON\TSC\WWED STANDARD DETAILS 5-14-2018.DWG - 205 A - PLOTTED: 8/14/2018 1:20:22 PM - BY: WILSON, ROBERT

STANDARD DETAIL — FIGURE 205B

BROWARD COUNTY PUBLIC WORKS DEPARTMENT

WATER & WASTEWATER SERVICES ENGINEERING DIVISION 2555 WEST COPANS ROAD POMPANO BEACH, FL 33069 PHONE NO. 954-831-0745 FAX: 954-831-0925

1. A FILLING AND FLUSHING JUMPER ASSEMBLY CONNECTION IS REQUIRED AT ALL CONNECTIONS BETWEEN EXISTING ACTIVE BCWWS WATER MAINS AND NEW WATER MAINS. THE PROCEDURES ARE APPLICABLE WHEN CONNECTING TO AN EXISTING BCWWS WATER MAIN, WHETHER BY TAPPING TEE AND VALVE OR BY CONTINUATION OF A PLUGGED STUB OUT WITH AN EXISTING GATE VALVE.
2. THE CONTRACTOR SHALL CONTACT BCWWS REGARDING SCHEDULING OF REQUIRED INSPECTIONS RELATING TO THE CONNECTION. BCWWS INSPECTIONS ARE SPECIFICALLY REQUIRED FOR TIE-INS OR WET TAPS TO EXISTING WATER MAINS, JUMPER ASSEMBLY CONNECTION INSTALLATION, FLUSHING, PRESSURE TESTING, DISINFECTION, SAMPLING, PLUGGING OF SAMPLING POINTS AND PERMANENT CONNECTION OF THE NEW WATER MAIN. THE CONTRACTOR SHALL FOLLOW ALL PROCEDURES STRICTLY IN ACCORDANCE WITH BCWWS STANDARDS.
3. THE JUMPER ASSEMBLY (2" DIAMETER FLANGE TO FLANGE) WILL BE SUPPLIED BY BCWWS AND INSTALLED AND TESTED BY THE CONTRACTOR, IN COORDINATION WITH THE ENGINEER OF RECORD (EOR) AND BCWWS. OTHER MATERIALS AND INSTALLATION REQUIRED FOR THE CONNECTION ARE THE RESPONSIBILITY OF THE CONTRACTOR. THE UNDERGROUND FITTINGS SHALL BE RESTRAINED MECHANICAL JOINT TYPE. ALL MATERIALS SHALL BE PER THE BCWWS APPROVED PRODUCT SPECIFICATION SHEETS. THE JUMPER SHALL BE MAINTAINED BY THE CONTRACTOR UNTIL IT IS REMOVED. JUMPER ASSEMBLIES 3" AND LARGER SHALL BE SUPPLIED AND INSTALLED BY THE CONTRACTOR IN COORDINATION WITH BCWWS.
4. ALL NEW WATER MAINS SHALL BE FLUSHED, PRESSURE TESTED AND DISINFECTED. NEW MAINS SHALL NOT BE PLACED INTO SERVICE UNTIL THE BACTERIOLOGICAL TEST RESULTS ARE SATISFACTORY AND A WRITTEN APPROVAL HAS BEEN OBTAINED FROM BCWWS, AS WELL AS CERTIFICATION FROM THE FLORIDA DEPARTMENT OF HEALTH.
5. THE WATER MAINS SHALL BE PRESSURE TESTED AFTER FLUSHING AND PRIOR TO DISINFECTION. ALL VALVES SHALL REMAIN CLOSED DURING THE PRESSURE TEST AND WILL NOT BE OPENED UNTIL THE RESULTS OF PRESSURE TESTING AND BACTERIOLOGICAL TESTING ARE SATISFACTORY AND THE SYSTEM HAS BEEN ACCEPTED FOR OPERATION BY BCWWS, AND HAS RECEIVED CERTIFICATION FROM THE FLORIDA DEPARTMENT OF HEALTH.
6. DISINFECTION SHALL BE CONDUCTED IN ACCORDANCE WITH AWWA C651. A MINIMUM PRESSURE OF 25 PSI SHALL BE MAINTAINED IN THE NEW MAIN AFTER DISINFECTION AT ALL TIMES.
7. PERMANENT CONNECTION TO EXISTING MAINS BY OPENING OF MAIN VALVES SHALL NOT BE MADE PRIOR TO BACTERIOLOGICAL CLEARANCE AND UNTIL APPROVED BY BCWWS AND CERTIFIED BY THE FLORIDA DEPARTMENT OF HEALTH.
8. UPON BACTERIOLOGICAL CLEARANCE, THE SAMPLING POINTS SHALL BE REMOVED AND PLUGGED BY THE CONTRACTOR. THE CONTRACTOR SHALL MAKE THE PERMANENT CONNECTION IN THE PRESENCE OF A BCWWS INSPECTOR. THE PIPE AND FITTINGS FOR CONNECTION SHALL BE DISINFECTED BY SPRAYING AND SWABBING WITH CHLORINE. THE JUMPER ASSEMBLY (FLANGE TO FLANGE) WILL BE REMOVED BY THE CONTRACTOR IN COORDINATION WITH BCWWS. THE CONTRACTOR SHALL REMOVE THE REMAINDER OF THE JUMPER CONNECTION PIPING AND PLUG THE CORPORATION STOP VALVES.

REPLACES FORMER 205 | REVISED 5/14/2018 | FILLING AND FLUSHING JUMPER CONNECTION | FIGURE 205B

M:\PLANNING AND DEVELOPMENT SECTION\SHARED DATA STORAGE\WILSON\TSC\WWED STANDARD DETAILS 5-14-2018.DWG - 205B - PLOTTED: 8/14/2018 1:20:28 PM - BY: WILSON, ROBERT

STANDARD DETAIL — FIGURE 206

BROWARD COUNTY PUBLIC WORKS DEPARTMENT

WATER & WASTEWATER SERVICES ENGINEERING DIVISION 2555 WEST COPANS ROAD POMPANO BEACH, FL 33069 PHONE NO. 954-831-0745 FAX: 954-831-0925

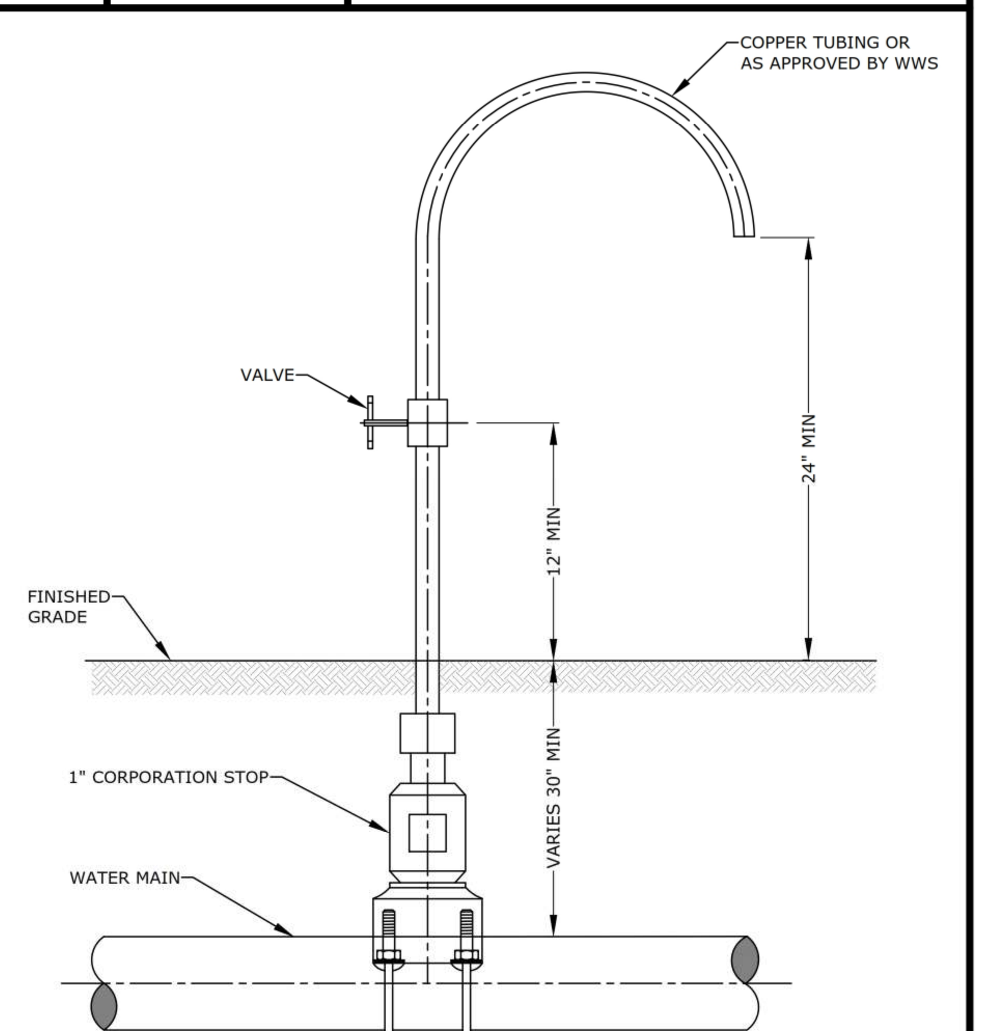

NOTES:

1. SAMPLE POINTS SHALL BE LOCATED AND LATER REMOVED AS REQUIRED BY BROWARD COUNTY HEALTH DEPARTMENT.
2. CORPORATION STOP SHALL BE CLOSED AND PLUGGED/CAPPED WITH A BRASS FITTING AFTER HEALTH DEPARTMENT CLEARANCE.
3. SAMPLING POINTS MAY BE PLACED AT THE ENDS OF WATER SERVICES BEFORE THE METERS AND ON BLOW OFFS FOR TERMINAL WATER MAINS, WHERE SERVICES AND BLOW OFFS ARE REQUIRED BY THE PLANS.

REPLACES FORMER DWG NO.6 | REVISED 5/14/2018 | SAMPLING POINT | FIGURE 206

M:\PLANNING AND DEVELOPMENT SECTION\SHARED DATA STORAGE\WILSON\TSC\WWED STANDARD DETAILS 5-14-2018.DWG - 206 - PLOTTED: 8/14/2018 1:20:32 PM - BY: WILSON, ROBERT

STANDARD DETAIL — FIGURE 224

BROWARD COUNTY PUBLIC WORKS DEPARTMENT

WATER & WASTEWATER SERVICES ENGINEERING DIVISION 2555 WEST COPANS ROAD POMPANO BEACH, FL 33069 PHONE NO. 954-831-0745 FAX: 954-831-0925

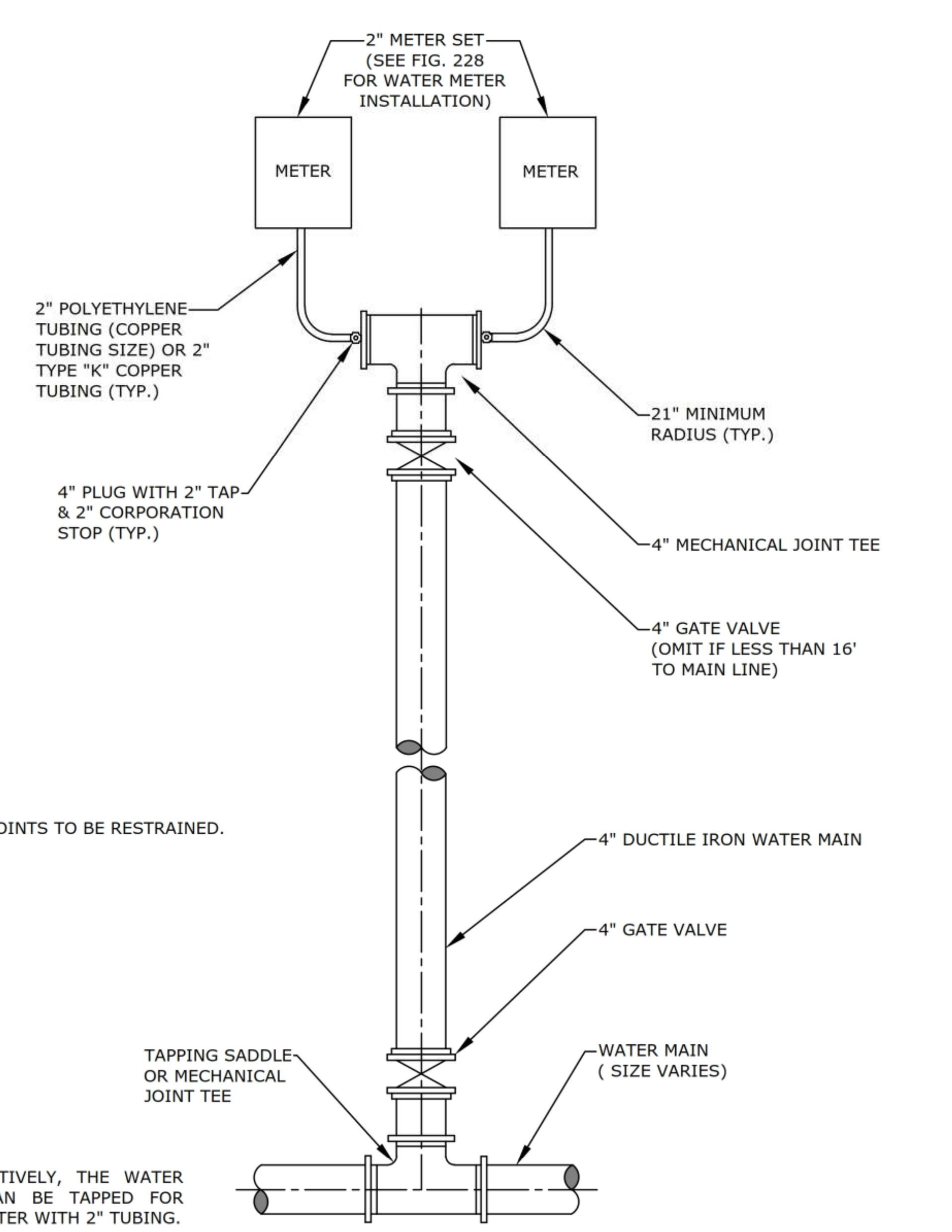

1. ALL JOINTS TO BE RESTRAINED.

ALTERNATIVELY, THE WATER MAIN CAN BE TAPPED FOR EACH METER WITH 2" TUBING.

REPLACES FORMER DWG NO.3D | REVISED 5/14/2018 | METER INSTALLATION FOR TWO 2" METERS | FIGURE 224

M:\PLANNING AND DEVELOPMENT SECTION\SHARED DATA STORAGE\WILSON\TSC\WWED STANDARD DETAILS 5-14-2018.DWG - 224 - PLOTTED: 8/14/2018 1:20:47 PM - BY: WILSON, ROBERT

STANDARD DETAIL — FIGURE 226

BROWARD COUNTY PUBLIC WORKS DEPARTMENT

WATER & WASTEWATER SERVICES ENGINEERING DIVISION 2555 WEST COPANS ROAD POMPANO BEACH, FL 33069 PHONE NO. 954-831-0745 FAX: 954-831-0925

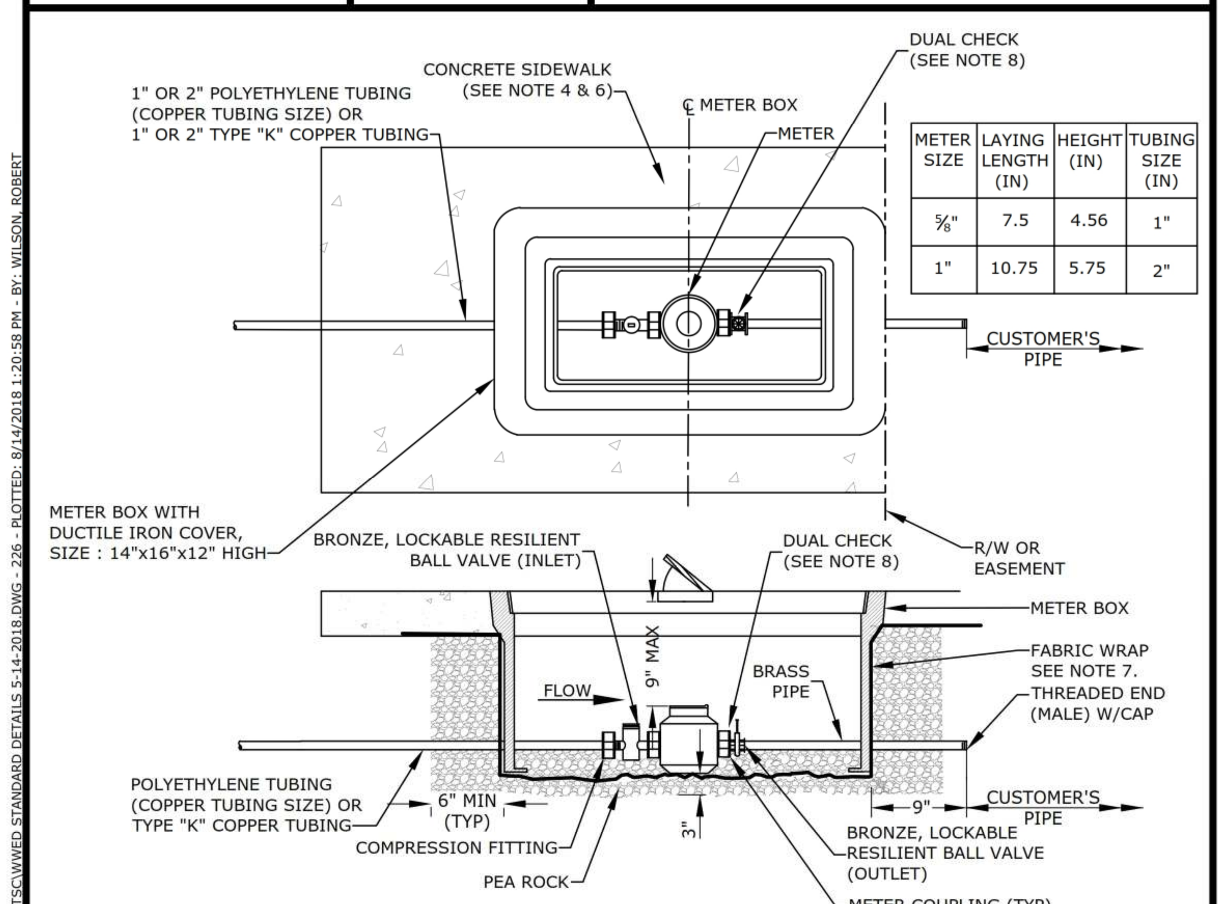

METER SIZE	LAYING LENGTH (IN)	HEIGHT (IN)	TUBING SIZE (IN)
⅝"	7.5	4.56	1"
1"	10.75	5.75	2"

NOTES:

1. ALL STRUCTURES TO BE TRAFFIC BEARING TYPE.
2. CURVE IN SERVICE LINE SHALL BE AS CLOSE TO METER BOX AS PRACTICAL, WITH A MINIMUM RADIUS OF BE 14" FOR 1" TUBING AND 21" FOR 2" TUBING.
3. ALL METERS WILL BE SUPPLIED AND INSTALLED BY WWS. METER HAS IRON PIPE THREAD MALE CONNECTION ON EACH END.
4. WHEN SIDEWALKS ARE PRESENT, OR PLANNED FOR IN THE R/W, THE BACK EDGE OF THE METER BOX SHALL LINE UP WITH THE BACK EDGE OF THE SIDEWALK.
5. METER SHALL BE CENTERED IN BOX DIRECTLY UNDER THE ACCESS LID. BALL VALVE AND BOTH METER COUPLINGS SHALL BE VISIBLE IN THE METER BOX.
6. WHEN THERE ARE NO SIDEWALKS, CONSTRUCT 6" WIDE x 6" THICK CONCRETE COLLAR AT GRADE.
7. AT BOTH PIPE PENETRATIONS THROUGH THE FABRIC WRAP, THE FABRIC SHALL BE PULLED TIGHT AROUND THE PIPE AND SECURED WITH TWO GRADE 316 STAINLESS STEEL HOSE CLAMPS TO PROVIDE A TIGHT SEAL AROUND PIPE.
8. DUAL CHECK ON SINGLE FAMILY HOUSE METERS ONLY. ALL OTHER METERS TO HAVE DOWNSTREAM ABOVE-GROUND BACK FLOW PREVENTER.

REPLACES FORMER DWG NO.3A | REVISED 5/14/2018 | WATER METER INSTALLATION FOR ⅝" AND 1" METERS | FIGURE 226

M:\PLANNING AND DEVELOPMENT SECTION\SHARED DATA STORAGE\WILSON\TSC\WWED STANDARD DETAILS 5-14-2018.DWG - 226 - PLOTTED: 8/14/2018 1:20:58 PM - BY: WILSON, ROBERT

REVISIONS: 1. 2. 3. 4. 5. 6. 7. 8.

CLIENT: **Kaller Architects**
2417 Hollywood Boulevard
Hollywood, Florida 33020-6605
(954) 920-5746

PROJECT: **613 Hallandale Beach Blvd.**
HALLANDALE BEACH FLORIDA 33304

TASK: **CONSTRUCTION DETAILS**

GGB Engineering, Inc.
CIVIL AND FORENSIC ENGINEERS • LAND PLANNERS • CONSTRUCTION MANAGERS
FLORIDA REGISTRATION No. 8118
email: gary@ggbeng.com
2699 Stirling Road, Suite C-202
Fort Lauderdale, Florida 33312
Phone: (954) 986-9899
Fax: (954) 986-6655

DATE:	SCALE:
March 2018	N.T.S.
DESIGNED BY: G.G.B.	DRAWN BY: F.M.
PROJECT NO. 18-0425	
SHEET C-6	

GARY G. BLOOM, P.E.
FLA LIC. No. 19832
NOT VALID UNLESS SIGNED AND SEALED BY ENGINEER

BROWARD COUNTY
PUBLIC WORKS DEPARTMENT

WATER & WASTEWATER SERVICES
ENGINEERING DIVISION
2555 WEST COPANS ROAD
POMPANO BEACH, FL 33069

PHONE NO. 954-831-0745
FAX: 954-831-0925

STANDARD DETAIL

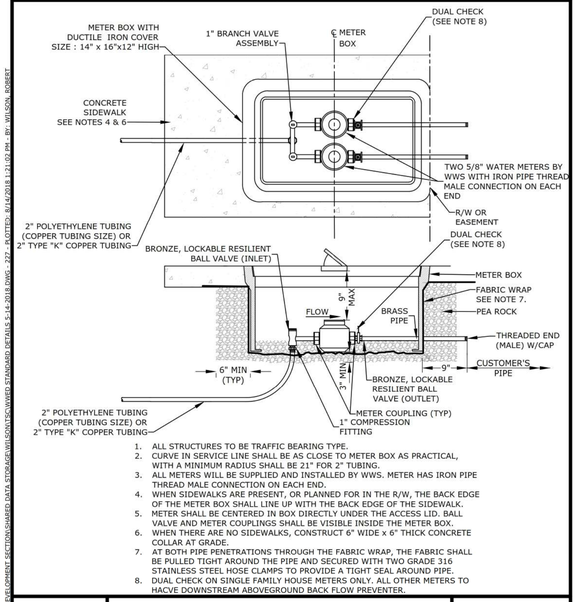

1. ALL STRUCTURES TO BE TRAFFIC BEARING TYPE.
2. CURVE IN SERVICE LINE SHALL BE AS CLOSE TO METER BOX AS PRACTICAL, WITH A MINIMUM RADIUS SHALL BE 21" FOR 2" TUBING.
3. ALL METERS WILL BE SUPPLIED AND INSTALLED BY WWS. METER HAS IRON PIPE THREAD MALE CONNECTION ON EACH END.
4. WHEN SIDEWALKS ARE PRESENT, OR PLANNED FOR IN THE R/W, THE BACK EDGE OF THE METER BOX SHALL LINE UP WITH THE BACK EDGE OF THE SIDEWALK.
5. METER SHALL BE CENTERED IN BOX DIRECTLY UNDER THE ACCESS LID. BALL VALVE AND METER COUPLINGS SHALL BE VISIBLE INSIDE THE METER BOX.
6. WHEN THERE ARE NO SIDEWALKS, CONSTRUCT 6" WIDE x 6" THICK CONCRETE COLLAR AT GRADE.
7. AT BOTH PIPE PENETRATIONS THROUGH THE FABRIC WRAP, THE FABRIC SHALL BE PULLED TIGHT AROUND THE PIPE AND SECURED WITH TWO GRADE 316 STAINLESS STEEL HOSE CLAMPS TO PROVIDE A TIGHT SEAL AROUND PIPE.
8. DUAL CHECK ON SINGLE FAMILY HOUSE METERS ONLY. ALL OTHER METERS TO HACVE DOWNSTREAM ABOVEGROUND BACK FLOW PREVENTER.

REPLACES FORMER DWG NO.3B	DOUBLE METER INSTALLATION FOR TWO 5/8" METERS	FIGURE 227
REVISED 5/14/2018		

BROWARD COUNTY
PUBLIC WORKS DEPARTMENT

WATER & WASTEWATER SERVICES
ENGINEERING DIVISION
2555 WEST COPANS ROAD
POMPANO BEACH, FL 33069

PHONE NO. 954-831-0745
FAX: 954-831-0925

STANDARD DETAIL

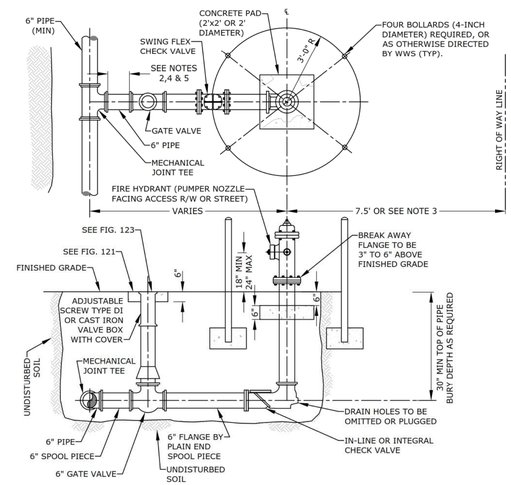

1. HYDRANT COATED WITH OSHA SAFETY YELLOW REFLECTIVE PAINT.
2. USE RESTRAINED JOINTS FOR THE ENTIRE ASSEMBLY SHOWN.
3. HYDRANT SET BACK SHALL CONFORM TO FDOT AND BCHCED REQUIREMENTS, WHERE APPLICABLE.
4. GATE VALVE IS NORMALLY LOCATED NEXT TO TEE.
5. IF DISTANCE FROM MAIN LINE TO FIRE HYDRANT IS GREATER THAN 20 FEET ANOTHER GATE VALVE WILL BE PROVIDED CLOSE TO THE HYDRANT. THIS SECOND VALVE SHALL BE INSTALLED WITHIN 5' OF THE FIRE HYDRANT. CHECK VALVE SHALL BE WITHIN 3' OF FIRE HYDRANT UNLESS CHECK VALVE INTEGRAL TO HYDRANT ASSEMBLY.
6. HYDRANT FEED PIPE MAY BE TAPPED FOR A SERVICE LINE UPSTREAM OF THE ISOLATION GATE VALVE.
7. A BLUE RAISED REFLECTIVE PAVEMENT MARKER SHALL BE PLACED AT THE CENTER LINE OF THE OUTSIDE ROADWAY LANE TO IDENTIFY THE FIRE HYDRANT LOCATION.

REPLACES FORMER DWG NO.8	FIRE HYDRANT INSTALLATION	FIGURE 231
REVISED 5/14/2018		

BROWARD COUNTY
PUBLIC WORKS DEPARTMENT

WATER & WASTEWATER SERVICES
ENGINEERING DIVISION
2555 WEST COPANS ROAD
POMPANO BEACH, FL 33069

PHONE NO. 954-831-0745
FAX: 954-831-0925

STANDARD DETAIL

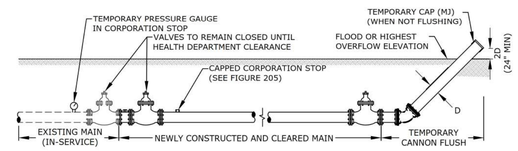

NOTES:

1. UPON COMPLETION OF THE PIPE INSTALLATION FOR ANY SECTION, ALL NEW WATER MAINS SHALL BE CANNON FLUSHED TO REMOVE DIRT AND ANY OTHER FOREIGN MATTER.
2. CANNON FLUSHING OF NEW WATER MAINS SHALL PROCEED ONLY AFTER HEALTH DEPARTMENT CLEARANCE IS RECEIVED.
3. CONTRACTOR IS CAUTIONED THAT GOVERNING AGENCIES OR UTILITIES MAY HAVE REGULATIONS LIMITING OR PROHIBITING DISCHARGE INTO SEWERS, SURFACE WATERS, CANALS, DITCHES AND OTHER CONVEYANCES/RETENTION AREAS. ALL COMPLIANCE WITH GOVERNING AGENCY REQUIREMENTS (INCLUDING PERMITTING, IF REQUIRED) IS THE SOLE RESPONSIBILITY OF THE CONTRACTOR.
4. INSTALL A TEMPORARY 45° BEND AND ASSOCIATED TEMPORARY PIPING AS SHOWN TO DIRECT THE FLUSHING WATER AWAY FROM THE IMMEDIATE WORK AREA AND EXERCISE DUE CARE SO AS TO ENSURE THAT THE WATER USED IN FLUSHING DOES NOT CAUSE A NUISANCE OR INFLICT PROPERTY DAMAGE.
5. CONTRACTOR SHALL INSTALL A TEMPORARY PRESSURE GAUGE AT OR NEAR THE FILL AND FLUSH LOCATION. CONTRACTOR SHALL MONITOR AND MAINTAIN A MINIMUM PRESSURE OF 40 PSI AT ALL TIMES. THE FILL VALVE WILL BE OPENED AND CLOSED SLOWLY TO AVOID RAPID PRESSURE CHANGES IN THE WATER SYSTEM.
6. BENDS AND PIPING SHALL BE THE SAME SIZE OR LARGER AS THE LINE BEING FLUSHED.
7. ALL PIPING SHALL BE MECHANICALLY RESTRAINED IN ACCORDANCE WITH WWS STANDARDS.
8. FLUSHING LOCATIONS ARE TO BE PROPOSED BY CONTRACTOR AND APPROVED BY ENGINEER OF RECORD.
9. PRIOR TO THE ACTUAL LINE FLUSHING OPERATION THE CONTRACTOR SHALL SCHEDULE INTENDED WATER USE WITH WWS.
10. NO EXISTING VALVES SHALL BE OPERATED, EXCEPT BY AUTHORIZED WWS PERSONNEL.
11. FLUSHING SHALL NOT BE ACCOMPLISHED WITHOUT THE ACTUAL PRESENCE OF THE WWS INSPECTOR.
12. AFTER THE WATER MAIN UNDER CONSTRUCTION HAS BEEN SUCCESSFULLY FLUSHED THE CONTRACTOR SHALL REMOVE ALL TEMPORARY FACILITIES AND PROCEED WITH THE REMAINING CONSTRUCTION AS SPECIFIED. CLOSE CORPORATION STOPS AND PLUG/CAP WITH BRASS FITTINGS.

REPLACES FORMER DWG N/A	CANNON FLUSHING FOR NEWLY CONSTRUCTED WATER MAINS	FIGURE 255
REVISED 5/14/2018		

BROWARD COUNTY
PUBLIC WORKS DEPARTMENT

WATER & WASTEWATER SERVICES
ENGINEERING DIVISION
2555 WEST COPANS ROAD
POMPANO BEACH, FL 33069

PHONE NO. 954-831-0745
FAX: 954-831-0925

STANDARD DETAIL

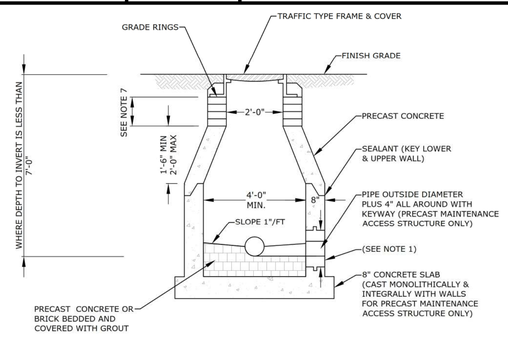

1. MAINTENANCE ACCESS STRUCTURE ADAPTOR COUPLING NEOPRENE BOOT OR APPROVED EQUAL ARE REQUIRED FOR ALL PIPE MATERIAL OR AS APPROVED BY WWS.
2. MAINTENANCE ACCESS STRUCTURE WALLS TO BE SEAL COATED INSIDE AND OUTSIDE WITH 16 MIL. THICKNESS OF COAL TAR EPOXY. THE 1st COAT IS RED AND THE 2nd COAT IS BLACK.
3. LIFT HOLES THROUGH PRECAST SECTIONS PERMITTED PER OSHA REQUIREMENTS.
4. ALL OPENINGS SHALL BE SEALED WITH WATERPROOF EXPANDING GROUT. SEE FIG. 322
5. A FLOW CHANNEL SHALL BE CONSTRUCTED INSIDE MAINTENANCE ACCESS STRUCTURE TO DIRECT INFLUENT INTO FLOW STREAM.
6. ALL CONCRETE SHALL BE TYPE II CEMENT, MEETING LATEST ASTM REQUIREMENTS AND PROVIDED WITH LABORATORY CERTIFICATION ON PRECAST STRUCTURES.
7. THE CHIMNEY AREA SHALL BE MINIMUM OF 4" AND A MAXIMUM OF 12" IN HEIGHT. A MINIMUM OF 3 GRADE RINGS SHALL BE INSTALLED. SET IN 2 STRIPS OF BUTYL JOINT SEALANT STRIPS ON EACH SEALING FACE.
8. SET MAINTENANCE ACCESS STRUCTURE FRAME ON 2 STRIPS OF BUTYL JOINT SEALANT STRIPS PLUS A BED OF PORTLAND CEMENT AND SILICA SAND. APPLY MORTAR ON INSIDE AND OUTSIDE BUTYL JOINT SEALANT.
9. APPLY MORTAR COATING TO INSIDE AND OUTSIDE OF CHIMNEY. BRING MORTAR UP AND OVER FRAME.

REPLACES FORMER DWG NO.13D	SHALLOW MAINTENANCE ACCESS STRUCTURE	FIGURE 311
REVISED 5/14/2018		

BROWARD COUNTY
PUBLIC WORKS DEPARTMENT

WATER & WASTEWATER SERVICES
ENGINEERING DIVISION
2555 WEST COPANS ROAD
POMPANO BEACH, FL 33069

PHONE NO. 954-831-0745
FAX: 954-831-0925

STANDARD DETAIL

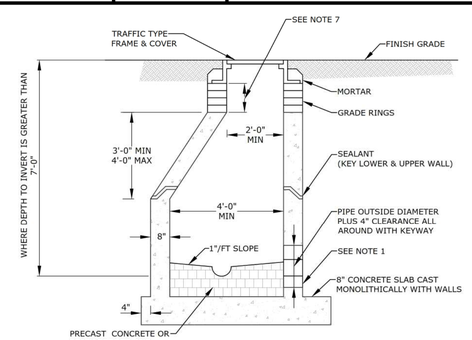

1. MAINTENANCE ACCESS STRUCTURE ADAPTOR COUPLING NEOPRENE BOOT OR APPROVED EQUAL ARE REQUIRED FOR ALL PIPE MATERIAL OR AS APPROVED BY WWS.
2. MAINTENANCE ACCESS STRUCTURE WALLS TO BE SEAL COATED INSIDE AND OUTSIDE WITH 16 MIL. THICKNESS OF COAL TAR EPOXY. THE 1st COAT IS RED AND THE 2nd COAT IS BLACK.
3. LIFT HOLES THROUGH PRECAST SECTIONS PERMITTED PER OSHA REQUIREMENTS.
4. ALL OPENINGS SHALL BE SEALED WITH WATERPROOF EXPANDING GROUT. SEE FIG. 322.
5. A FLOW CHANNEL SHALL BE CONSTRUCTED INSIDE MAINTENANCE ACCESS STRUCTURE TO DIRECT INFLUENT INTO FLOW STREAM.
6. ALL CONCRETE SHALL BE TYPE II CEMENT, MEETING LATEST ASTM REQUIREMENTS AND PROVIDED WITH LABORATORY CERTIFICATION ON PRECAST STRUCTURES.
7. THE CHIMNEY AREA SHALL BE MINIMUM OF 4" AND A MAXIMUM OF 12" IN HEIGHT. A MINIMUM OF 3 GRADE RINGS SHALL BE INSTALLED. SET IN 2 STRIPS OF BUTYL JOINT SEALANT STRIPS ON EACH SEALING FACE.
8. SET MAINTENANCE ACCESS STRUCTURE FRAME ON 2 STRIPS OF BUTYL JOINT SEALANT STRIPS PLUS A BED OF PORTLAND CEMENT AND SILICA SAND. APPLY MORTAR ON INSIDE AND OUTSIDE BUTYL JOINT SEALANT.
9. APPLY MORTAR COATING TO INSIDE AND OUTSIDE OF CHIMNEY. BRING MORTAR UP AND OVER FRAME.

REPLACES FORMER DWG NO.13A	PRECAST MAINTENANCE ACCESS STRUCTURE	312
REVISED 5/14/2018		

BROWARD COUNTY
PUBLIC WORKS DEPARTMENT

WATER & WASTEWATER SERVICES
ENGINEERING DIVISION
2555 WEST COPANS ROAD
POMPANO BEACH, FL 33069

PHONE NO. 954-831-0745
FAX: 954-831-0925

STANDARD DETAIL

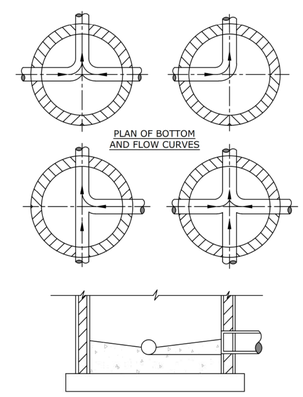

1. PROVIDE SPILLWAY FOR SMOOTH FLOW BETWEEN PIPES WITH DIFFERENT INVERT ELEVATIONS.
2. SLOPE MAINTENANCE ACCESS STRUCTURE SHELF 1"/FT MAINTENANCE ACCESS STRUCTURE WALL TO CHANNEL.
3. INVERT CHANNEL TO BE CONSTRUCTED FOR SMOOTH FLOW WITH NO OBSTRUCTIONS.
4. CHANNEL SHALL BE PRECAST CONCRETE OR FILLED WITH BRICK COVERED WITH 1" OF MORTAR.

REPLACES FORMER DWG NO.13B	INVERT CHANNEL FLOW DIRECTIONS	FIGURE 318
REVISED 5/14/2018		

REVISIONS:
1. 2. 3. 4. 5. 6. 7. 8.

CLIENT:
Kaller Architects
2417 Hollywood Boulevard
Hollywood, Florida 33020-6605
(954) 920-5746

PROJECT:
613 Hallandale Beach Blvd.
HALLANDALE BEACH FLORIDA 33304

TASK:
CONSTRUCTION DETAILS

GGB Engineering, Inc.
CIVIL AND FORENSIC ENGINEERS • LAND PLANNERS • CONSTRUCTION MANAGERS
FLORIDA REGISTRATION No. 8118
email: gary@ggbeng.com
Phone: (954) 986-0899
Fax: (954) 986-8635
2699 Stirling Road, Suite C-202
Fort Lauderdale, Florida 33312

DATE: March 2018	SCALE: N.T.S.
DESIGNED BY: G.G.B.	DRAWN BY: F.M.
PROJECT NO. 18-0425	
SHEET C-7	

GARY G. BLOOM, P.E.
FLA. LIC. No. 39832
NOT VALID UNLESS SIGNED AND SEALED BY ENGINEER

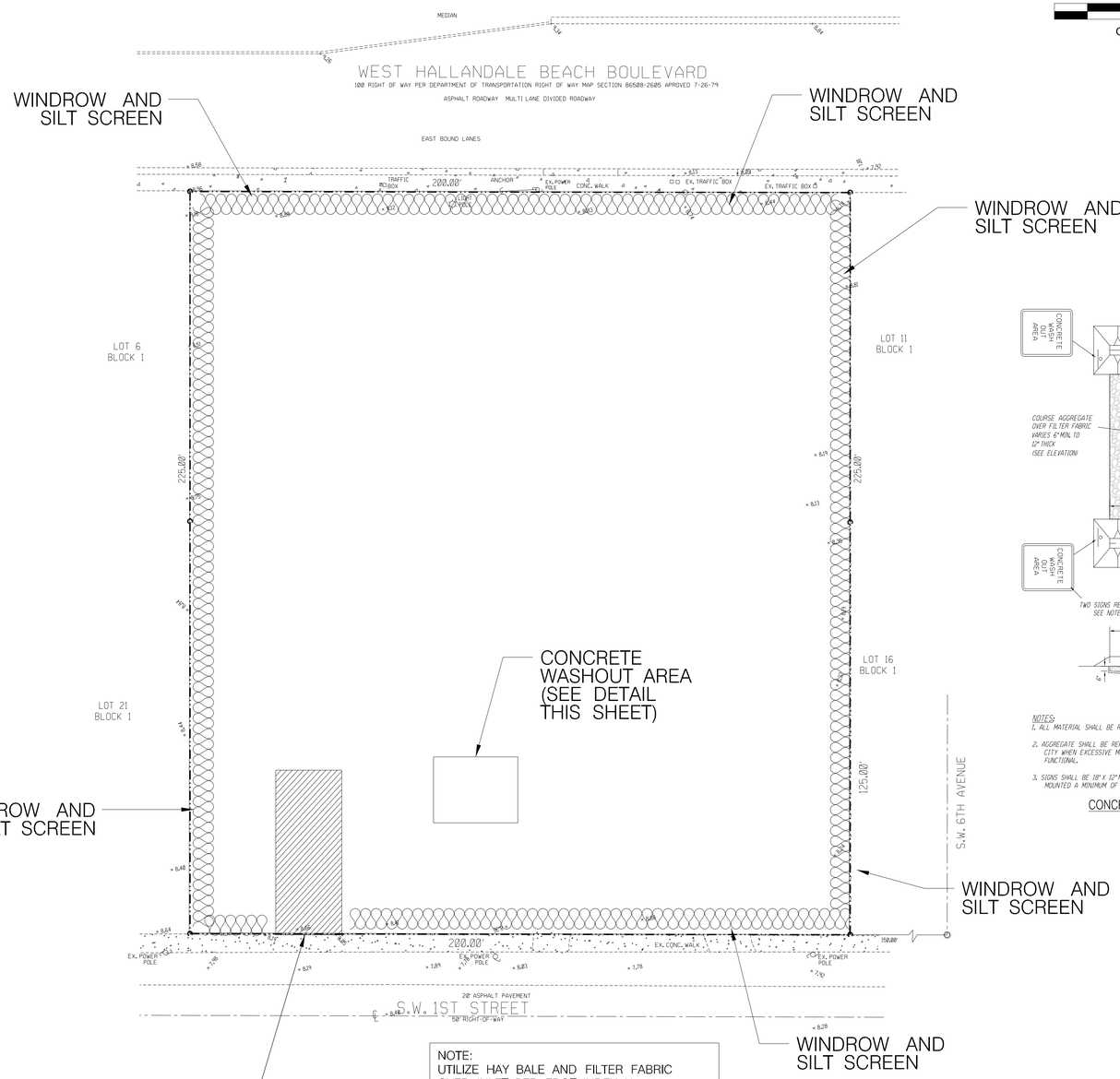

NOTE:
UTILIZE HAY BALE AND FILTER FABRIC OVER INLET PER FDOT INDEX No. 102 FOR ALL PROPOSED AND EXISTING INLETS.

LEGEND

DENOTES WINDROW AND SILT SCREEN ALONG PROPERTY LINE DURING CONSTRUCTION OF GRADING AND DRAINAGE

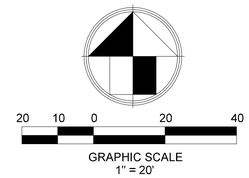

LOCATION MAP
N.T.S.

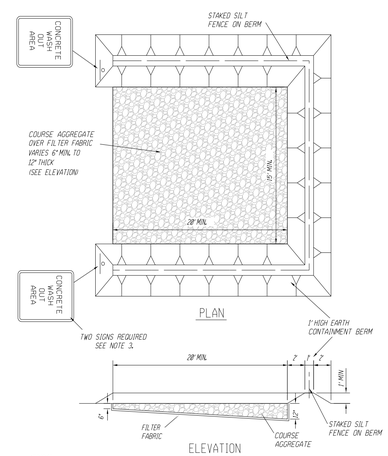

NOTES:
1. ALL MATERIAL SHALL BE REMOVED FROM THE SITE AT THE END OF THE PROJECT.
2. AGGREGATE SHALL BE REPLACED AS DIRECTED BY THE ENGINEER OF RECORD AND/OR THE CITY WHEN EXCESSIVE MATERIALS BUILDUP RENDERS THE WASH OUT AREA NO LONGER FUNCTIONAL.
3. SIGNS SHALL BE 18" x 12" MIN. SIZE WITH 2" BLACK LETTERING ON A WHITE BACKGROUND AND MOUNTED A MINIMUM OF 7 FEET ABOVE GRADE FROM THE LOWEST EDGE OF THE SIGN FACE.

CONCRETE TRUCK WASH OUT AREA

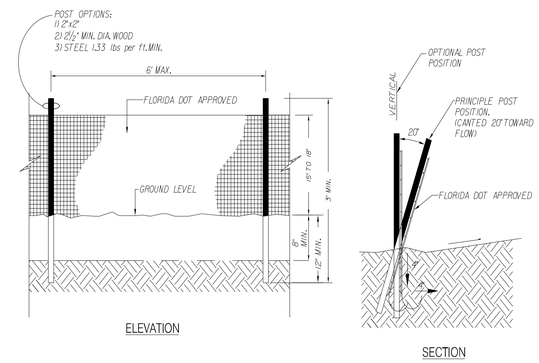

TYPICAL SILT FENCE DETAIL
N.T.S.

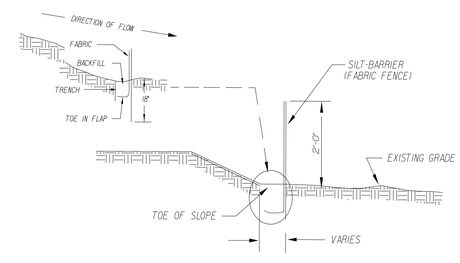

FABRIC FENCE SILT-BARRIER

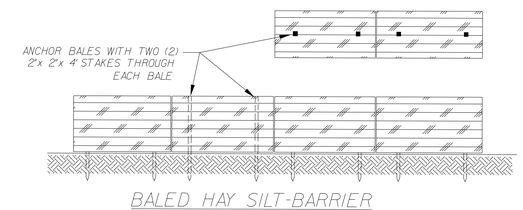

BALED HAY SILT-BARRIER

PERIMETER EROSION AND SEDIMENT CONTROL

NOTES:
1. CONTRACTOR IS REQUIRED TO PREVENT ANY SEDIMENT TRANSPORT FROM THE PROJECT SITE ON TO ADJACENT PROPERTY. INSTALLATION OF EITHER BALED HAY OR FABRIC FENCE TYPE SILT BARRIER IS ACCEPTABLE. THE BARRIER MUST REMAIN IN PLACE UNTIL UPLAND VEGETATION IS ESTABLISHED.
2. BEFORE REMOVING SILT BARRIER, CONTRACTOR SHALL COLLECT AND DISPOSE OF ANY ACCUMULATED SILT.

SILT BARRIER DETAIL
N.T.S.

NOTES:

1. Stabilize Disturbed Soil (S3.2)
   Use and document the use of Best Management Practices (BMPs) for soil stabilization (keeping good soil in place during the construction process) such as hydro mulch, nonfloatable conventional or alternative mulch, groundcovers, rye grass or millet, and retaining walls.
   Silt fence without other measures does not meet the requirement.
2. General Contractor have to take photos

REVISIONS:
1.
2.
3.
4.
5.
6.
7.
8.

CLIENT:
Kaller Architects
2417 Hollywood Boulevard
Hollywood, Florida 33020-6605
(954) 920-5746

PROJECT:
613 Hallandale Beach Blvd.
HALLANDALE BEACH FLORIDA 33304

TASK:
STORMWATER POLLUTION PREVENTION PLAN

GGB Engineering, Inc.
CIVIL AND FORENSIC ENGINEERS • LAND PLANNERS • CONSTRUCTION MANAGERS
FLORIDA REGISTRATION No. 8118
2690 Stirling Road, Suite C-202
Fort Lauderdale, Florida 33312
Phone: (954) 986-9939
Fax: (954) 986-8635
email: gary@ggbeng.com

DATE:	SCALE:
March 2018	1"=20'
DESIGNED BY: G.G.B.	DRAWN BY: F.M.

PROJECT NO. 18-0425

SHEET C-8

GARY G. BLOOM, P.E.
FLA LIC. No. 59832
NOT VALID UNLESS SIGNED AND SEALED BY ENGINEER

STORM WATER POLLUTION PREVENTION PLAN

SITE DESCRIPTION

CONTROLS

THIS PLAN UTILIZES BEST MANAGEMENT PRACTICES TO CONTROL EROSION CAUSED BY STORM WATER RUN OFF.AN EROSION PROTECTION PLAN HAS BEEN PREPARED TO INSTRUCT THE CONTRACTOR ON PLACEMENT OF THESE CONTROLS. IT IS THE CONTRACTORS RESPONSIBILITY TO INSTALL AND MAINT AIN THE CONTROLS PER PLAN AS WELL AS ENSURING THE PLAN IS PROVIDING THE PROPER PROTECTION AS REQUIRED BY FEDERAL,STATE AND LOCAL LAWS. REFER TO 'CONTRACTORS RESPONSIBILITY'FOR A VERBAL DESCRIPTION OF THE CONTROLS THAT MAY BE IMPLEMENTED.

STORM WATER MANAGEMENT

DURING CONSTRUCTION,STORM WATER DRAINAGE WILL BE PROVIDED BY UTILIZATION OF THE EXISTING SOILS FOR RUNOFF CONTAINMENT AND NATURAL PERCOLATION.THE CONTRACTOR SHALL UTILIZE STAKED SILT FENCES AND EARTH BERMS TO CONTAIN ALL RUNOFF ON THE PROPERTY WITHOUT DISCHARGE TO ADJACENT CANALS.
CONTRACTOR SHALL UTILIZE OTHER BEST MANAGEMENT PRACTICES AS NECESSARY TO COMPLY WITH THE REQUIREMENTS SET FORTH BY LOCAL,STATE AND FEDERAL REQUIREMENTS.

TIMING OF CONTROLS/MEASURES

IT IS THE CONTRACTOR IS RESPONSIBE FOR THE TIMING OF CONTROLS AND MEASURES AS REQUIRED TO MEET REQUIREMENTS.

CERTIFICATION OF COMPLIANCE WITH FEDERAL,STATE AND LOCAL REGULATIONS

IN ACCORDANCE WITH FEDERAL,STATE AND LOCAL LAWS RELATED TO STORM WATER MANAGEMENT AND EROSION AND TURBIDITY CONTROLS,THE FOLLOWING PERMITS HAVE BEEN OBTAINED.

- ERP APPLICATION
- BRO COUNTY DPEP

POLLUTION PREVENTION PLAN CERTIFICATION

I CERTIFY UNDER PENALTY OF LAW THAT THIS DOCUMENT AND ALL ATTACHMENTS WERE PREPARED UNDER MY DIRECTION OR SUPERVISION IN ACCORDANCE WITH A SYSTEM DESIGNED TO ASSURE THAT QUALIFIED PERSONNEL PROPERLY GATHERED AND EVALUATED THE INFORMATION SUBMITTED.BASED ON MY INQUIRY OF THE PERSON OR PERSONS WHO MANAGE THE SYSTEM,OR THOSE PERSONS DIRECTLY RESPONSIBLE FOR GATHERING THE INFORMATION,THE INFORMATION SUBMITTED IS,TO THE BEST OF MY KNOWLEDGE AND BELIEF,TRUE,ACCURATE,AND COMPLETE.I AM AWARE THAT THERE ARE SIGNIFICANT PENALTIES FOR SUBMITTING FALSE INFORMATION,INCLUDING THE POSSIBILITY OF FINE AND IMPRISONMENT FOR KNOWING VIOLATIONS.

GENERAL

THE CONTRACTOR SHALL AT A MINIMUM IMPLEMENT THE CONTRACTOR'S REQUIREMENTS OUTLINED BELOW AND THOSE MEASURES SHOWN ON THE EROSION AND TURBIDITY CONTROL PLAN.IN ADDITION THE CONTRACTOR SHALL UNDERTAKE ADDITIONAL MEASURES REQUIRED TO BE IN COMPLIANCE WITH APPLICABLE PERMIT CONDITIONS AND STATE WATER QUALITY STANDARDS.DEPENDING ON THE NATURE OF MATERIALS AND METHODS OF CONSTRUCTION THE CONTRACTOR MAY BE REQUIRED TO ADD FLOCCULANTS TO THE RETENTION SYSTEM PRIOR TO PLACING THE SYSTEM INTO OPERATION.

SEQUENCE OF MAJOR ACTIVITIES:

SEQUENCE OF MAJOR ACTIVITIES:

1. INSTALL EROSION AND SEDIMENT CONTROL MEASURES.
2. DEMO AND CLEAR SITE
3. INSTALL UNDERGROUND UTILITIES.
4. COMPLETE FINAL GRADING OPERATIONS.
5. CONTINUE WITH E&S CONTROL MEASURES.
6. START BUILDING FOUNDATION.
7. CONTINUE WITH E&S CONTROL MEASURES.
8. COMPLETE BUILDING CONSTRUCTION.
9. CONTINUE WITH E&S CONTROL MEASURES.
10. COMPLETE CURB AND SIDEWALK CONSTRUCTION
11. REMOVE ACCUMULATED SEDIMENTS FROM STORM WATER MANAGEMENT SYSTEM.

TIMING OF CONTROLS/MEASURES

AS INDICATED IN THE SEQUENCE OF MAJOR ACTIVITIES,THE SILT FENCES AND HAY BALES WILL BE CONSTRUCTED PRIOR TO CLEARING OR GRADING OF ANY PORTIONS OF THE SITE.AS CONSTRUCTION PROCEEDS,THE CONTRACTOR MUST BE DILIGENT TO UN-INSTALL AND RE-INSTALL PORTIONS OF
ALL OF THE SILT FENCE OR HAY BAYS OR TAKE OTHER MEASURES NECESSARY TO MAINTAIN THE SYSTEM IN ACCORDANCE WITH ALL REGULATIONS.

ENDANGERED SPECIES AND CRITICAL HABITAT

1. ARE THERE ENDANGERED SPECIES ON SITE? NO.
2. ARE THERE CRITICAL HABITAT ON SITE? NO.

IF YES TO EITHER QUESTION,PLEASE EXPLAIN.

CONTROLS

IT IS THE CONTRACTORS RESPONSIBILITY TO IMPLEMENT THE EROSION AND TURBIDITY CONTROLS AS SHOWN ON THE GRADING,DRAINAGE & EROSION CONTROL PLAN.IT IS ALSO THE CONTRACTORS RESPONSIBILITY TO ENSURE THESE CONTROLS ARE PROPERLY INSTALLED,MAINTAINED AND FUNCTIONING PROPERLY TO PREVENT TURBID OR POLLUTED WATER FROM LEAVING THE PROJECT SITE.THE CONTRACTOR WILL ADJUST THE EROSION AND TURBIDITY CONTROLS SHOWN ON THE GRADING,DRAINAGE & EROSION CONTROL PLAN AND ADD ADDITIONAL CONTROL MEASURES,AS REQUIRED,TO ENSURE THE SITE MEETS ALL FEDERAL,STATE AND LOCAL EROSION AND TURBIDITY CONTROL REQUIREMENTS.THE FOLLOWING BEST MANAGEMENT PRACTICES WILL BE IMPLEMENTED BY THE CONTRACTOR AS REQUIRED BY THE GRADING,DRAINAGE & EROSION CONTROL PLAN AND AS REQUIRED TO MEET THE EROSION AND TURBIDITY REQUIREMENTS IMPOSED ON THE PROJECT SITE BY THE REGULATORY AGENCIES.

EROSION AND SEDIMENT CONTROLS
STABILIZATION PRACTICES (IF APPLICABLE):

1. FILTER FABRIC BARRIER:FILTER FABRIC BARRIERS CAN BE USED BELOW DISTURBED AREAS SUBJECT TO SHEET AND RILL EROSION WITH THE FOLLOWING LIMITATIONS:
   A. WHERE THE MAXIMUM SLOPE BEHIND THE BARRIER IS 33 PERCENT.
   B. IN MINOR SWALES OR DITCH LINES WHERE THE MAXIMUM CONTRIBUTING CONTRIBUTING DRAINAGE AREA IS NO GREATER THAN 2 ACRES.

   REFER TO THE EROSION CONTROL DETAILS FOR PROPER CONSTRUCTION OF THE FILTER FABRIC BARRIER.
3. BRUSH BARRIER WITH FILTER FABRIC: BRUSH BARRIER MAY BE USED BELOW DISTURBED AREAS SUBJECT TO SHEET AND RILL EROSION WHERE ENOUGH RESIDUE MATERIAL IS AVAILABLE ON SITE.
4. LEVEL SPREADER:A LEVEL SPREADER MAY BE USED WHERE SEDIMENT-FREE STORM RUNOFF IS INTERCEPTED AND DIVERTED AWAY FROM THE GRADED AREAS ONTO UNDISTURBED STABILIZED AREAS.THIS PRACTICE APPLIES ONLY IN THOSE SITUATIONS WHERE THE SPREADER CAN BE CONSTRUCTED ON UNDISTURBED SOIL AND THE AREA BELOW THE LEVEL UP IS STABILIZED.THE WATER SHOULD NOT BE ALLOWED TO RECONCENTRATE AFTER RELEASE.
5. STOCKPILING MATERIAL:NO EXCAVATED MATERIAL SHALL BE STOCKPILED IN SUCH A MANNER AS TO DIRECT RUNOFF DIRECTLY OFF THE PROJECT SITE INTO ANY ADJACENT WATER BODY OR STORM WATER COLLECTION FACILITY.
6. EXPOSED AREA LIMITATION:THE SURFACE AREA OF OPEN,RAW ERODIBLE SOIL EXPOSED BY CLEARING AND GRUBBING OPERATIONS OR EXCAVATION AND FILLING OPERATIONS SHALL BE MINIMIZED.
7. INLET PROTECTION:INLETS AND CATCH BASINS WHICH DISCHARGE DIRECTLY OFF-SITE SHALL BE PROTECTED FROM SEDIMENT-LADEN STORM RUNOFF UNTIL THE COMPLETION OF ALL CONSTRUCTION OPERATIONS THAT MAY CONTRIBUTE SEDIMENT TO THE INLET.
8. DUST CONTROL:AREAS OPENED BY CONSTRUCTION OPERATIONS AND THAT ARE NOT ANTICIPATED TO BE RE-EXCAVATED OR DRESSED AND RECEIVE FINAL TREATMENT WITHIN 30 DAYS SHALL BE STABILIZED.
9. TEMPORARY SEEDING AND MULCHING:SLOPES STEEPER THAN 6:1(THAT FALL WITHIN THE CATEGORY ESTABLISHED IN PARAGRAPH 8 ABOVE SHALL ADDITIONALLY RECEIVE MULCHING OF APPROXIMATELY 2 INCHES LOOSE MEASURE OF MULCH MATERIAL CUT INTO THE SOIL OF THE SEEDED AREA ADEQUATE TO PREVENT MOVEMENT OF SEED AND MULCH.
10. TEMPORARY GRASSING:THE SEEDED OR SEEDED AND MULCHED AREA(S) SHALL BE ROLLED AND WATERED OR HYDROMULCHED OR OTHER SUITABLE METHODS IF REQUIRED TO ASSURE OPTIMUM GROWING CONDITIONS FOR THE ESTABLISHMENT OF A GOOD GRASS COVER. TEMPORARY GRASSING SHALL BE THE SAME MIX & AMOUNT REQUIRED FOR PERMANENT GRASSING IN THE CONTRACT SPECIFICATIONS.
11. TEMPORARY REGRASSING :IF,AFTER 14 DAYS FROM SEEDING,THE TEMPORARY GRASSED AREAS HAVE NOT ATTAINED A MINIMUM OF 75 PERCENT GOOD GRASS COVER,THE AREA WILL BE REWORKED AND ADDITIONAL SEED APPLIED SUFFICIENT TO ESTABLISH THE DESIRED VEGETATIVE COVER.
12. MAINTENANCE:ALL FEATURES OF THE PROJECT DESIGNED AND CONSTRUCTED TO PREVENT EROSION AND SEDIMENT SHALL BE MAINTAINED DURING THE LIFE OF THE CONSTRUCTION SO AS TO FUNCTION AS THEY WERE ORIGINALLY DESIGNED AND CONSTRUCTED.
13. PERMANENT EROSION CONTROL:THE EROSION CONTROL FACILITIES OF THE PROJECT SHOULD BE DESIGNED TO MINIMIZE THE IMPACT ON THE OFFSITE FACILITIES.
14. PERMANENT SEEDING:ALL AREAS WHICH HAVE BEEN DISTURBED BY CONSTRUCTION WILL,AS A MINIMUM,BE SEEDED.THE SEEDING MIX MUST PROVIDE BOTH LONG-TERM VEGETATION AND RAPID GROWTH SEASONAL VEGETATION.SLOPES STEEPER THAN 4:1 SHALL BE SEEDED AND MULCHED OR SODDED.

STRUCTURAL PRACTICES (IF APPLICABLE):

1. TEMPORARY DIVERSION DIKE: TEMPORARY DIVERSION DIKES MAY BE USED TO DIVERT RUNOFF THROUGH A SEDIMENT-TRAPPING FACILITY.
2. TEMPORARY SEDIMENT TRAP:A SEDIMENT TRAP SHALL BE INSTALLED IN A DRAINAGE WAY AT A STORM DRAIN INLET OR AT OTHER POINTS OF DISCHARGE FROM A DISTURBED AREA.
   THE FOLLOWING SEDIMENT TRAPS MAY BE CONSTRUCTED EITHER INDEPENDENTLY OR IN CONJUNCTION WITH A TEMPORARY DIVERSION DIKE:
   A. BLOCK & GRAVEL SEDIMENT FILTER - THIS PROTECTION IS APPLICABLE WHERE HEAVY FLOWS AND/OR WHERE AN OVERFLOW CAPACITY IS NECESSARY TO PREVENT EXCESSIVE PONDING AROUND THE STRUCTURE.
   B. GRAVEL SEDIMENT TRAP - THIS PROTECTION IS APPLICABLE WHERE HEAVY CONCENTRATED FLOWS ARE EXPECTED,BUT NOT WHERE PONDING AROUND THE STRUCTURE MIGHT CAUSE EXCESSIVE INCONVENIENCE OR DAMAGE TO ADJACENT STRUCTURES & UNPROTECTED AREAS.
   C. DROP INLET SEDIMENT TRAP - THIS PROTECTION IS APPLICABLE WHERE THE INLET DRAINS A RELATIVELY FLAT AREA (< 5%) AND WHERE SHEET OR OVERLAND FLOWS (Q < 0.5 CFS) ARE TYPICAL.THIS METHOD SHALL NOT APPLY TO INLETS RECEIVING CONCENTRATED FLOWS SUCH AS IN STREET OR HIGHWAY MEDIANS.
3. OUTLET PROTECTION:APPLICABLE TO THE OUTLETS OF ALL PIPES AND PAVED CHANNEL SECTIONS WHERE THE FLOW COULD CAUSE EROSION & SEDIMENT PROBLEM TO THE RECEIVING WATER BODY.SILT FENCES & HAY BALES ARE TO BE INSTALLED IMMEDIATELY DOWNSTREAM OF THE DISCHARGING STRUCTURE AS SHOWN ON THE OUTLET PROTECTION DETAIL.
4. SEDIMENT BASIN:(NOT APPLICABLE)

OTHER CONTROLS

WASTE DISPOSAL (IF APPLICABLE):

WASTE MATERIALS

ALL WASTE MATERIALS EXCEPT LAND CLEARING DEBRIS SHALL BE COLLECTED AND STORED IN A SECURELY LIDDED METAL DUMPSTER.THE DUMPSTER WILL MEET ALL LOCAL AND STATE SOLID WASTE MANAGEMENT REGULATIONS.THE DUMPSTER WILL BE EMPTIED AS NEEDED AND THE TRASH WILL BE HAULED TO A STATE APPROVED LANDFILL.ALL PERSONNEL WILL BE INSTRUCTED REGARDING THE CORRECT PROCEDURE FOR WASTE DISPOSAL.NOTICES STATING THESE PRACTICES WILL BE POSTED AT THE CONSTRUCTION SITE BY THE CONSTRUCTION SUPERINTENDENT.THE INDIVIDUAL WHO MANAGES THE DAY-TO-DAY SITE OPERATIONS,WILL BE RESPONSIBLE FOR SEEING THAT THESE PROCEDURES ARE FOLLOWED.

HAZARDOUS WASTE

ALL HAZARDOUS WASTE MATERIALS WILL BE DISPOSED OF IN THE MANNER SPECIFIED BY LOCAL OR STATE REGULATION OR BY THE MANUFACTURER.SITE PERSONNEL WILL BE INSTRUCTED IN THESE PRACTICES AND THE SITE SUPERINTENDENT,THE INDIVIDUAL WHO MANAGES DAY-TO-DAY SITE OPERATIONS)WILL BE RESPONSIBLE FOR SEEING THAT THESE PRACTICES ARE FOLLOWED.

SANITARY WASTE

ALL SANITARY WASTE WILL BE COLLECTED FROM THE PORTABLE UNITS AS NEEDED TO PREVENT POSSIBLE SPILLAGE.THE WASTE WILL BE COLLECTED AND DEPOSED OF IN ACCORDANCE WITH STATE AND LOCAL WASTE DISPOSAL REGULATIONS FOR SANITARY SEWER OR SEPTIC SYSTEMS.

OFFSITE VEHICLE TRACKING

A STABILIZED CONSTRUCTION ENTRANCE WILL BE PROVIDED TO HELP REDUCE VEHICLE TRACKING OF SEDIMENTS.THE PAVED STREET ADJACENT TO THE SITE ENTRANCE WILL BE SWEPT AS NEEDED TO REMOVE ANY EXCESS MUD,DIRT OR ROCK TRACKED FROM THE SITE.DUMP TRUCKS HAULING MATERIAL FROM THE CONSTRUCTION SITE WILL BE COVERED WITH A TARPAULIN.

INVENTORY FOR POLLUTION PREVENTION PLAN

THE MATERIALS OR SUBSTANCES LISTED BELOW ARE EXPECTED TO BE PRESENT ONSITE DURING CONSTRUCTION:

[X] Concrete	[X] Fertilizers	[X] Wood
[X] Asphalt	[X] Petroleum Based Products	[X] Masonry Blocks
[X] Tar	[X] Cleaning Solvents	[X] Roofing Materials
[X] Detergents	[X] Paints	[X] Metal Studs
[ ] _____	[ ] _____	[ ] _____

SPILL PREVENTION

MATERIAL MANAGEMENT PRACTICES

THE FOLLOWING ARE THE MATERIAL MANAGEMENT PRACTICES THAT WILL BE USED TO REDUCE THE RISK OF SPILLS OR OTHER ACCIDENTAL EXPOSURE OF MATERIALS AND SUBSTANCES TO STORM WATER RUNOFF.

GOOD HOUSEKEEPING

THE FOLLOWING GOOD HOUSEKEEPING PRACTICES WILL BE FOLLOWED ONSITE DURING THE CONSTRUCTION PROJECT.

- AN EFFORT WILL BE MADE TO STORE ONLY ENOUGH PRODUCT REQUIRED TO DO THE JOB.
- ALL MATERIALS STORED ONSITE WILL BE STORED IN A NEAT,ORDERLY MANNER IN THEIR APPROPRIATE CONTAINERS AND,IF POSSIBLE,UNDER A ROOF OR OTHER ENCLOSURE.
- PRODUCTS WILL BE KEPT IN THEIR ORIGINAL CONTAINERS WITH THE ORIGINAL ORIGINAL MANUFACTURER'S LABEL.
- SUBSTANCES WILL NOT BE MIXED WITH ONE ANOTHER UNLESS RECOMMENDED BY THE MANUFACTURER.
- WHENEVER POSSIBLE,ALL OF A PRODUCT WILL BE USED UP BEFORE DISPOSING OF THE CONTAINER.
- MANUFACTURER'S RECOMMENDATIONS FOR PROPER USE AND DISPOSAL WILL BE FOLLOWED.
- THE SITE SUPERINTENDENT WILL INSPECT DAILY TO ENSURE MATERIALS ONSITE RECEIVE PROPER USE AND DISPOSAL.

HAZARDOUS PRODUCTS

THESE PRACTICES ARE USED TO REDUCE THE RISKS ASSOCIATED WITH HAZARDOUS MATERIALS.

- PRODUCTS WILL BE KEPT IN ORIGINAL CONTAINERS UNLESS THEY ARE NOT RESEALABLE.
- ORIGINAL LABELS AND MATERIAL SAFETY DATA WILL BE RETAINED;THEY CONTAIN IMPORTANT PRODUCT INFORMATION.
- IF SURPLUS PRODUCT MUST BE DISPOSED OF,MANUFACTURER'S OR LOCAL AND STATE RECOMMENDED METHODS FOR PROPER DISPOSAL WILL BE FOLLOWED.

PRODUCT SPECIFIC PRACTICES

THE FOLLOWING PRODUCT SPECIFIC PRACTICES WILL BE FOLLOWED ONSITE:

PETROLEUM PRODUCTS

ALL ONSITE VEHICLES WILL BE MONITORED FOR LEAKS AND RECEIVE REGULAR PREVENTIVE MAINTENANCE TO REDUCE THE CHANCE OF LEAKAGE.PETROLEUM PRODUCTS WILL BE STORED IN TIGHTLY SEALED CONTAINERS WHICH ARE CLEARLY LABELED.ANY ASPHALT SUBSTANCES USED ONSITE WILL BE APPLIED ACCORDING TO THE MANUFACTURER'S RECOMMENDATIONS.

FERTILIZERS

FERTILIZERS USED WILL BE APPLIED ONLY IN THE MINIMUM AMOUNTS RECOMMENDED BY THE MANUFACTURER.ONCE APPLIED,FERTILIZER WILL BE WORKED INTO THE SOIL TO LIMIT EXPOSURE TO STORM WATER. STORAGE WILL BE IN A COVERED AREA.THE CONTENTS OF ANY PARTIALLY USED BAGS OF FERTILIZER WILL BE TRANSFERRED TO A SEALABLE PLASTIC BIN TO AVOID SPILLS.

PAINTS

ALL CONTAINERS WILL BE TIGHTLY SEALED AND STORED WHEN NOT REQUIRED FOR USE.EXCESS PAINT WILL NOT BE DISCHARGED TO THE STORM SEWER SYSTEM BUT WILL BE PROPERLY DISPOSED OF ACCORDING TO MANUFACTURERS' INSTRUCTIONS OR STATE AND LOCAL REGULATIONS.

CONCRETE TRUCKS

CONCRETE TRUCKS WILL NOT BE ALLOWED TO WASH OUT OR DISCHARGE SURPLUS CONCRETE OR DRUM WASH WATER ON THE SITE.

SPILL CONTROL PRACTICES

IN ADDITION TO THE GOOD HOUSEKEEPING AND MATERIAL MANAGEMENT PRACTICES DISCUSSED IN THE PREVIOUS SECTIONS OF THIS PLAN,THE FOLLOWING PRACTICES WILL BE FOLLOWED FOR SPILL PREVENTION AND CLEANUP:

MANUFACTURERS' RECOMMENDED METHODS FOR SPILL CLEANUP WILL BE CLEARLY POSTED ON SITE AND SITE PERSONNEL WILL BE MADE AWARE OF THE PROCEDURES AND THE LOCATION OF THE INFORMATION AND CLEANUP SUPPLIES.

MATERIALS AND EQUIPMENT NECESSARY FOR SPILL CLEANUP WILL BE KEPT IN THE MATERIAL STORAGE AREA ONSITE.EQUIPMENT AND MATERIALS WILL INCLUDE BUT NOT BE LIMITED TO BROOMS,DUST PANS,MOPS,RAGS, GLOVES,GOGGLES,LIQUID ABSORBENT (I.E.KITTY LITTER OR EQUAL), SAND,SAWDUST,AND PLASTIC AND METAL TRASH CONTAINERS SPECIFICALLY FOR THIS PURPOSE.

ALL SPILLS WILL BE CLEANED UP IMMEDIATELY AFTER DISCOVERY.

THE SPILL AREA WILL BE KEPT WELL VENTILATED AND PERSONNEL WILL WEAR APPROPRIATE PROTECTIVE CLOTHING TO PREVENT INJURY FROM CONTACT WITH A HAZARDOUS SUBSTANCE.

SPILL OF TOXIC OR HAZARDOUS MATERIAL WILL BE REPORTED TO THE APPROPRIATE STATE OR LOCAL GOVERNMENT AGENCY.REGARDLESS OF THE SIZE OF THE SPILL.

THE SPILL PREVENTION PLAN WILL BE ADJUSTED TO INCLUDE MEASURES TO PREVENT THIS TYPE OF SPILL FROM REOCCURRING AND HOW TO CLEAN UP THE SPILL IF THERE IS ANOTHER ONE.A DESCRIPTION OF THE SPILL,WHAT CAUSED IT,AND THE CLEANUP MEASURES WILL ALSO BE INCLUDED.

THE SITE SUPERINTENDENT RESPONSIBLE FOR THE DAY-TO-DAY SITE OPERATIONS,WILL BE THE SPILL PREVENTION AND CLEANUP COORDINATOR. HE/SHE WILL DESIGNATE AT LEAST ONE OTHER SITE PERSONNEL WHO WILL RECEIVE SPILL PREVENTION AND CLEANUP TRAINING.THESE INDIVIDUALS WILL EACH BECOME RESPONSIBLE FOR A PARTICULAR PHASE OF PREVENTION AND CLEANUP.THE NAMES OF RESPONSIBLE SPILL PERSONNEL WILL BE POSTED IN THE MATERIAL STORAGE AREA AND IF APPLICABLE,IN THE OFFICE TRAILER ONSITE.

MAINTENANCE/INSPECTION PROCEDURES

EROSION AND SEDIMENT CONTROL INSPECTION AND MAINTENANCE PRACTICES

THE FOLLOWING ARE INSPECTION AND MAINTENANCE PRACTICES THAT WILL BE USED TO MAINTAIN EROSION AND SEDIMENT CONTROLS.

NO MORE THAN 5 ACRES OF THE SITE WILL BE DENUDED AT ONE TIME WITHOUT WRITTEN PERMISSION FROM THE ENGINEER.

ALL CONTROL MEASURES WILL BE INSPECTED BY THE SUPERINTENDENT. THE PERSON RESPONSIBLE FOR THE DAY TO DAY SITE OPERATION OR SOMEONE APPOINTED BY THE SUPERINTENDENT,AT LEAST ONCE A WEEK AND FOLLOWING ANY STORM EVENT OF 0.25 INCHES OR GREATER.

ALL TURBIDITY CONTROL MEASURES WILL BE MAINTAINED IN GOOD WORKING ORDER;IF A REPAIR IS NECESSARY,IT WILL BE INITIATED WITHIN 24 HOURS OF REPORT.

BUILT UP SEDIMENT WILL BE REMOVED FROM SILT FENCE WHEN IT HAS REACHED ONE-THIRD THE HEIGHT OF THE FENCE.

- SILT FENCE WILL BE INSPECTED FOR DEPTH OF SEDIMENT,TEARS,TO SEE IF THE FABRIC IS SECURELY ATTACHED TO THE FENCE POSTS,AND TO SEE THAT THE FENCE POSTS ARE FIRMLY IN THE GROUND.
- THE SEDIMENT BASINS WILL BE INSPECTED FOR THE DEPTH OF SEDIMENT, AND BUILT UP SEDIMENT WILL BE REMOVED WHEN IT REACHES 10 PERCENT OF THE DESIGN CAPACITY OR AT THE END OF THE JOB, WHICHEVER COMES FIRST.
- DIVERSION DIKES/SWALES WILL BE INSPECTED AND ANY BREACHES PROMPTLY REPAIRED.
- TEMPORARY AND PERMANENT SEEDING AND PLANTING WILL BE INSPECTED FOR BARE SPOTS,WASHOUTS,AND HEALTHY GROWTH.
- A MAINTENANCE INSPECTION REPORT WILL BE MADE AFTER EACH INSPECTION.A COPY OF THE REPORT FORM TO BE COMPLETED BY THE INSPECTOR IS ATTACHED.
  THE REPORTS WILL BE KEPT ON SITE DURING CONSTRUCTION AND AVAILABLE UPON REQUEST TO THE OWNER,ENGINEER OR ANY FEDERAL, STATE OR LOCAL AGENCY APPROVING SEDIMENT AND AND EROSION PLANS,OR STORM WATER MANAGEMENT PLANS.
  THE REPORTS SHALL BE MADE AND RETAINED AS PART OF THE STORM WATER POLLUTION PREVENTION PLAN FOR AT LEAST THREE YEARS FROM THE DATE THAT THE SITE IS FINALLY STABILIZED AND THE NOTICE OF TERMINATION IS SUBMITTED.THE REPORTS SHALL IDENTIFY ANY INCIDENTS OF NON-COMPLIANCE.
- THE SITE SUPERINTENDENT WILL SELECT UP TO THREE INDIVIDUALS WHO WILL BE RESPONSIBLE FOR INSPECTIONS,MAINTENANCE AND REPAIR ACTIVITIES,AND FILLING OUT THE INSPECTION AND MAINTENANCE REPORT.
- PERSONNEL SELECTED FOR INSPECTION AND MAINTENANCE RESPONSIBILITIES WILL RECEIVE TRAINING FROM THE SITE SUPERINTENDENT.THEY WILL BE TRAINED IN ALL THE INSPECTION AND MAINTENANCE PRACTICES NECESSARY FOR KEEPING THE EROSION AND SEDIMENT CONTROLS USED ONSITE IN GOOD WORKING ORDER.

NON-STORM WATER DISCHARGES

IT IS EXPECTED THAT THE FOLLOWING NON-STORM WATER DISCHARGES WILL OCCUR FROM THE SITE DURING THE CONSTRUCTION PERIOD:

- WATER FROM WATER LINE FLUSHING
- PAVEMENT WASH WATERS (WHERE NO SPILLS OR LEAKS OF TOXIC OR HAZARDOUS MATERIALS HAVE OCCURRED).
- UNCONTAMINATED GROUNDWATER (FROM DEWATERING EXCAVATION).

ALL NON-STORM WATER DISCHARGES WILL BE DIRECTED TO THE SEDIMENT BASIN PRIOR TO DISCHARGE.

CONTRACTOR'S CERTIFICATION

I CERTIFY UNDER PENALTY OF LAW THAT I UNDERSTAND THE TERMS AND CONDITIONS OF THE GENERAL NATIONAL POLLUTANT DISCHARGE ELIMINATION SYSTEM (NPDES) PERMIT THAT AUTHORIZES THE STORM WATER DISCHARGES ASSOCIATED WITH INDUSTRIAL ACTIVITY FROM THE CONSTRUCTION SITE IDENTIFIED AS PART OF THIS CERTIFICATION.

SIGNATURE	BUSINESS NAME AND ADDRESS OF CONTRACTOR & ALL SUBS	RESPONSIBLE FOR/DUTIES
		GENERAL CONTRACTOR
		SUB-CONTRACTOR
		SUB-CONTRACTOR
		SUB-CONTRACTOR
		SUB-CONTRACTOR

REVISIONS:
1. 2. 3. 4. 5. 6. 7. 8.

CLIENT:
Kaller Architects
2417 Hollywood Boulevard
Hollywood, Florida 33020-6605
(954) 920-5746

PROJECT:
613 Hallandale Beach Blvd.
HALLANDALE BEACH FLORIDA 33304

TASK:
STORMWATER POLLUTION PREVENTION PLAN

GGB Engineering, Inc.
CIVIL AND FORENSIC ENGINEERS • LAND PLANNERS
• CONSTRUCTION MANAGERS
FLORIDA REGISTRATION No. 8118
email: gary@ggbeng.com
Phone: (954) 986-8909
Fax: (954) 986-6865
2699 Stirling Road, Suite C-202
Fort Lauderdale, Florida 33312

DATE:	SCALE:
March 2018	N.T.S.
DESIGNED BY: G.G.B.	DRAWN BY: F.M.

PROJECT NO. 18-0425

SHEET C-9

GARY G. BLOOM, P.E.
FLA LIC. No. 19832
NOT VALID UNLESS SIGNED AND SEALED BY ENGINEER

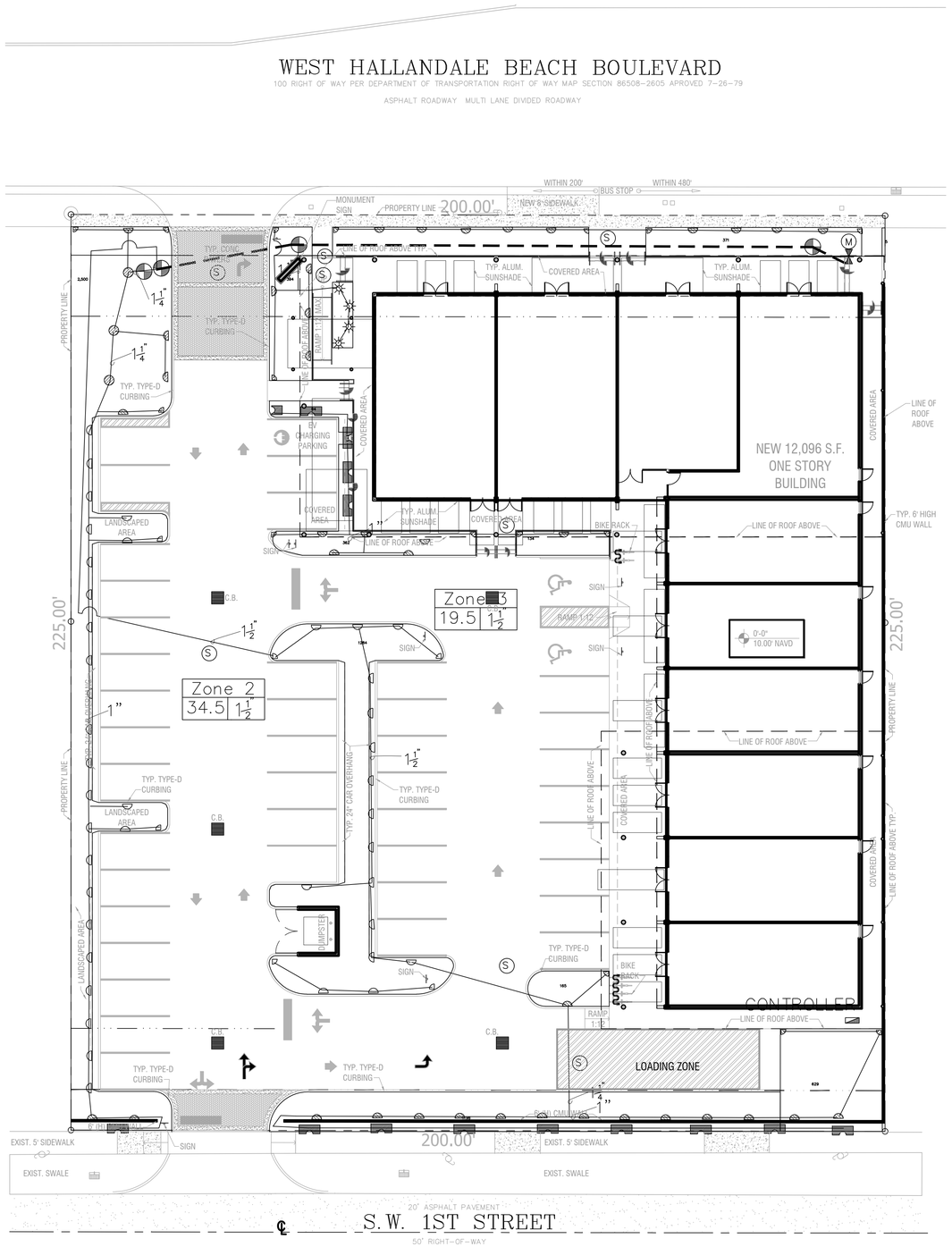

N

IRRIGATION PLAN

SCALE: 1/16" = 1'-0"

0 16' 32' 64'

IRRIGATION NOTES:

Piping:

Main Lines: PVC SDR 26, Class 160 Solvent Weld.

Zone Lines: PVC; 1/2 in. and 3/4 in. are not used. Min. pipe is 1 in. 315 PSI: 1 in. = SDR 21.
200 PSI: 1-1/4 in. and greater = SDR 26, 160 PSI. All solvent weld.

All end of the line unmarked pipe = 1 in. (min.).

Sleeves and suction Line: PVC, SCH 40.

Fittings: SCH 40 PVC

Fabrication: To manufacturers specifications. Use blue or grey PVC cement, square cut, clean and prime all joints.

Allow all main lines to cure for 24 hours before pressuring.

All pipe, fittings, and solvents to conform to latest ASTM specs.

Depth of Lines: Main Line and wiring = 18 in. depth, min.
Sleeving under pavement = 24 in. depth, min.
Suction Line = 24 in. depth, nominal.
Zone Lines 1-1/2 in. and smaller = 10 in. depth, min.

Control Wires: AWG 14 for all hot wires and AWG 12 for common.
Solid copper type UF UL listed for direct burial.
Run wires under main and tape every 20 feet.
Run spares, two min.
Splice wires only in a valve box. All splices shall be moisture proof using
Snap lite or DBY UL connectors.
Common shall be white, hot shall be red or color coded.
Spare shall be black. Run in conduit where no Main line runs.

Backfill all trenches free of debris, compact to original density, flush all lines, use screens in all heads, adjust heads for proper coverage avoiding excess water on walls, walks, etc.

All details are graphically shown only. All quantities shall be verified by the contractor prior to installation. It shall be the contractors responsibility to assure complete overlapping coverage. Any discrepancies shall be reported to the owner and landscape architect before proceeding. Codes and local regulations shall take precedence over these plans, it is the contractors responsibility to comply. The landscape architect reserves the right to make minor field changes, the contractor may field adjust spray nozzle selection to provide for proper 100% min. coverage.

Provide owner with an accurate as installed plan(s) at completion showing main lines, wiring, valves, crossings, etc. using dimensions from fixed datums.

Contractor shall verify all underground utilities prior to commencement of work.

The perimeter irrigation and landscape may be required to be installed prior to either or both pump stations and all main line / valve wiring. A separate plan showing modifications and alternate water source will be provided prior to construction. The modifications will not impact upon the design intent or substantially affect the construction plan.

IRRIGATION LEGEND:

MAIN LINE -
1-1/2" Feed From City Water Source

LATERAL ZONE LINES - SDR PVC as noted

ZONE BOUNDARIES

BACK FLOW- See Point of Connection Detail.

CONTROLLER - Toro Custom Command Series
Electric 6 station controller #CC-P-6 mounted
on Southeast corner of structure, with a
Rain Check automatic rain sensor shutoff
switch mounted outside on eave of structure.

ZONE VALVES -
Toro 250 Series

EXISTING WATER METER -
1" or per City Code.

SLEEVES -
Sch. 40, 2 Sizes Larger.
NOTE - Pipe Size Shown is the Lateral Size, NOT the Sleeve Size

6" POP-UP SPRAY -
Toro 570 Series MPR Spray Nozzles as Required.
NOTE - All of the below may not be used

15' Series -	12' Series -	10' Series -	8' Series -
15-Q-PC - 1/4"	12-Q-PC - 1/4"	10-Q-PC - 1/4"	8-Q-PC - 1/4"
15-T-PC - 1/3"	12-T-PC - 1/3"	10-T-PC - 1/3"	8-T-PC - 1/3"
15-H-PC - 1/2"	12-H-PC - 1/2"	10-H-PC - 1/2"	8-H-PC - 1/2"
15-TT-PC - 2/3"	12-TT-PC - 2/3"	10-TT-PC - 2/3"	8-TT-PC - 2/3"
15-TQ-PC - 3/4"	12-TQ-PC - 3/4"	10-TQ-PC - 3/4"	8-TQ-PC - 3/4"
15-F-PC - Full	12-F-PC - Full	10-F-PC - Full	8-F-PC - Full

4S-SST-PC 4 x 18'

4-EST-PC 4 x 15'

4-CST-PC 4 x 30'

6" POP-UP FLOOD BUBBLER -
Toro 570 Series MPR Pressure
Compensating Nozzles as Required.

SYSTEM DESIGN OPERATING PRESSURE =
Between 35 and 40 psi.

Zone 2 — Zone Number
37.6 | 1 1/2 — Valve Size
37.6 — GPM per Zone

4" POP-UP ROTOR -
Hunter PGM Rotor W/
Appropriate Nozzle as Required

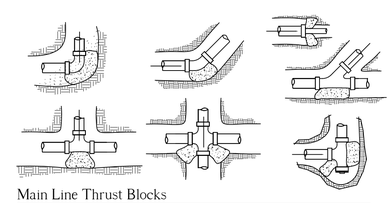

Main Line Thrust Blocks

NTS

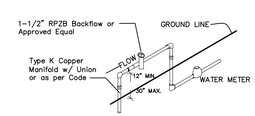

Point of Connection

NTS

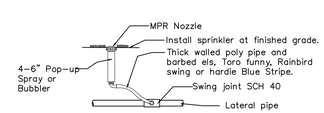

4 or 6" Pop-up Spray / Bubbler Detail

NTS

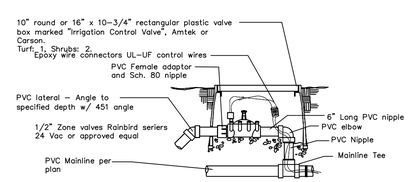

Zone Valve Detail

NTS

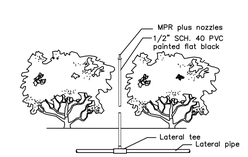

Shrub Riser Spray Detail

NTS

TONNING & ASSOCIATES, INC.
Landscape Architecture & Land Planning
Landscape Architect - Florida License #6666709
4855 NW 92 Terrace
Coral Springs, Florida 33067
Tel: 561-414-8269
Email: wtonning@tonningandassociates.com

DRWG. TITLE : IRRIGATION PLAN

PROJECT : HALLANDALE SHOPS
625 WEST HALLANDALE BEACH BOULEVARD
HALLANDALE BEACH, FLORIDA 33009

CLIENT : KALLER AND ASSOCIATES, INC.

SEAL

WAYNE K. TONNING, RLA
RLA #6666709

PROJECT NO. 18-118
DRAWN BY WKT
DESIGNED BY WKT
CHECKED BY WKT
DATE : 05-06-18
DWG. NO. LI-1
SHT. NO. 1 of 1
REVISIONS :
06-21-18
11-14-18

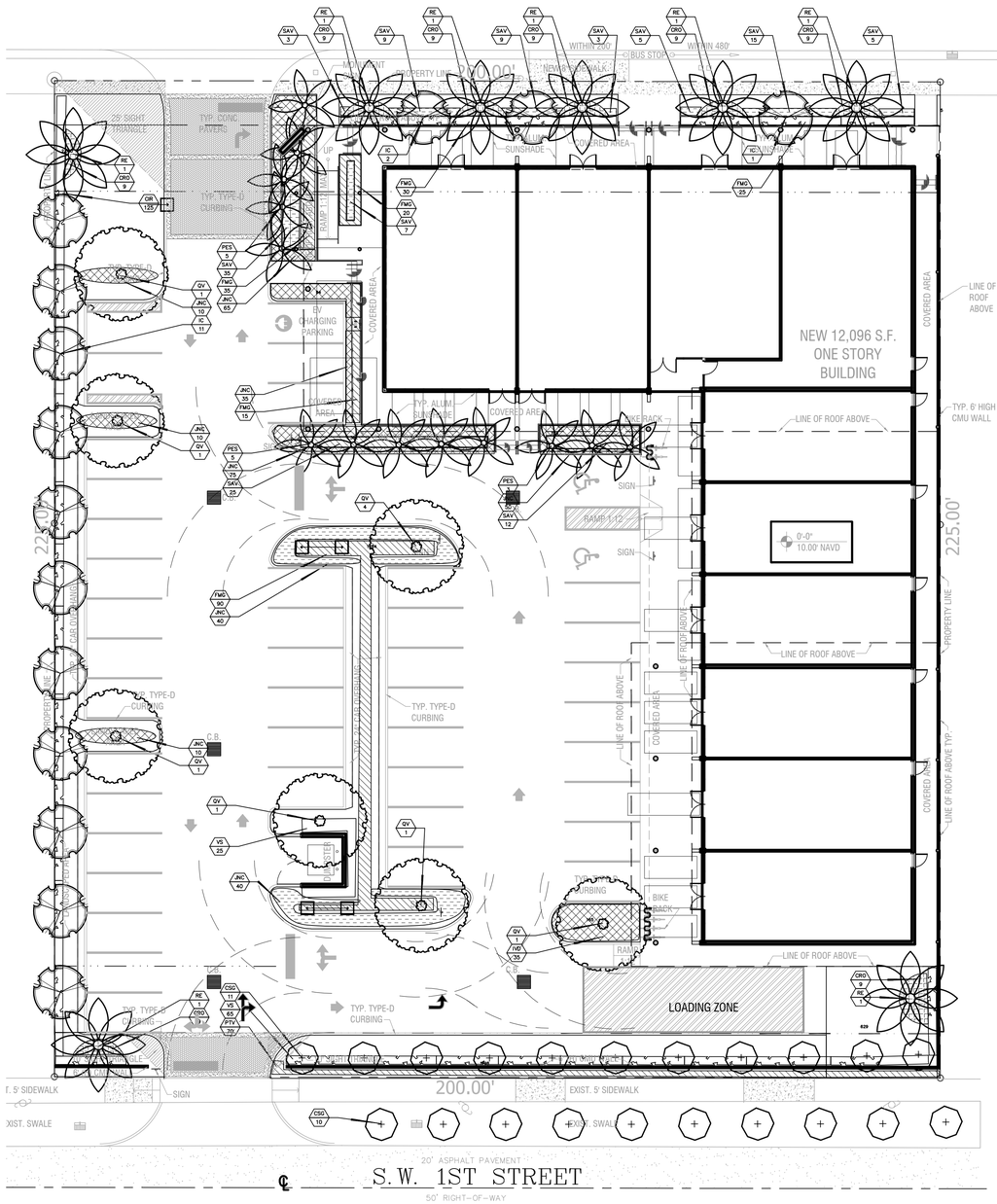

LANDSCAPE PLAN

SCALE: 1/16" = 1'-0"

0 16' 32' 64'

PROPOSED PLANT LIST

TREES / PALMS

Code		Drought	QTY.	Botanical Name / Common Name	Specifications	Salt Tolerance	Light Requirements
CSG	(N)	V	21	Codia sebestenia / Orange Geiger	B&B Field Grown, 2" DBH, 12' OA	Very Tolerant	Part Sun to Full Sun
IC	(N)	V	14	Ilex cassina / Dahoon Holly	B&B Field Grown, 3" DBH, 15' OA	Very Tolerant	Part Sun to Full Sun
PES		V	13	Ptychosperma elegans / Solitaire Palms	B&B Field Grown, 8-10-12' OA, Staggered	Very Tolerant	Part Sun to Full Sun
RE	(N)	V	8	Roystonea elata / Florida Royal Palm	B&B Field Grown, 10-12' CT, 20' OA	Very Tolerant	Part Sun to Full Sun
QV	(N)	V	10	Quercus virginiana / Live Oak	B&B Field Grown, 3" DBH, 15' OA	Very Tolerant	Part Sun to Full Sun

ACCENTS / SHRUBS / GROUND COVERS

CIR	(N)	V	125	Chrysobalanus icaco / Red Tip Cocoplum	3 Gal., 24" OA, 2' OC	Very Tolerant	Part Sun to Full Sun
CRO		V	72	Croton spps / Curly Boy Croton	3 Gal., 24" OA, 2' OC	Very Tolerant	Part Sun to Full Sun
JNC	(N)	V	335	Juniperus conferta / Shore Juniper	3 Gal., 24" OA, 2' OC	Very Tolerant	Full Sun
IVD	(N)	V	35	Ilex vomitoria / Dwarf Schellings Ilex	3 Gal., 24" OA, 2' OC	Very Tolerant	Part Sun to Full Sun
FMG	(N)	V	215	Ficus macrocarpa / Green Island Ficus	3 Gal., 24" OA, 2' OC	Very Tolerant	Full Sun
PTV		V	70	Pittosporum tibira variegateum / Variegated Pittosporum	3 Gal., 12" OA, 24" OC	Very Tolerant	Part Sun to Full Sun
SAV		V	128	Schefflera aboricola / Trinette	3 Gal., 24" OA, 24" OC	Very Tolerant	Part Sun to Full Sun
VS	(N)	V	90	Viburnum suspensor / Sandankwa Viburnum	3 Gal., 30" OA, 24" OC	Very Tolerant	Part Sun to Full Sun

MISCELLANEOUS

SOD	M	St Augustine Sod	Solid application - no gaps between seams

(N) Florida Native Plant Species

V Low Drought Tolerance
M Moderate Drought Tolerance
L Very Drought Tolerant

NOTES:

GENERAL PLANTING REQUIREMENTS

All sizes shown for plant material on the plans are to be considered Minimum. All plant material must meet or exceed these minimum requirements for both height and spread. Any other requirements for specific shape or effect as noted on the plan(s) will also be required for final acceptance.

All plant material furnished by the landscape contractor shall be Florida #1 or better as established by "Grades and Standards for Florida Nursery Plants" and "Grades and Standards for Florida Nursery Trees". All material shall be installed as per CSI specifications.

All plant material as included herein shall be warrantied by the landscape contractor for a minimum period as follows: All trees and palms for 12 months, all shrubs, vines, groundcovers and miscellaneous planting materials for 90 days, and all lawn areas for 60 days after final acceptance by the owner or owner's representative.

All plant material shall be planted in planting soil that is delivered to the site in a clean loose and friable condition. All soil shall have a well drained characteristic. Soil must be free of all rocks, sticks, and objectionable material including weeds and weed seeds as per CSI specifications.

Twelve inches (12") of planting soil 50/50 sand/topsoil mix is required around and beneath the root ball of all trees and palms, and 1 cubic yard per 50 bedding or groundcover plants.

All landscape areas shall be covered with Eucalyptus or sterilized seed free Melaleuca mulch to a minimum depth of three inches (3") of cover when settled. Cypress bark mulch shall not be used.

All plant material shall be thoroughly watered in at the time of planting; no dry planting permitted. All plant materials shall be planted such that the top of the plant ball is flush with the surrounding grade.

All landscape and lawn areas shall be irrigated by a fully automatic sprinkler system adjusted to provide 100% coverage of all landscape areas. All heads shall be adjusted to 50% overlap as per manufacturers specifications and performance standards utilizing a rust free water source. Each system shall be installed with a rain sensor.

Each lot shall supply, install, and maintain an individual irrigation system for that individual lot.

It is the sole responsibility of the landscape contractor to insure that all new plantings receive adequate water during the installation and during all plant warranty periods. Deep watering of all new trees and palms and any supplemental watering that may be required to augment natural rainfall and site irrigation is mandatory to insure proper plant development and shall be provided as a part of this contract.

All plant material shall be installed with fertilizer, which shall be State approved as a complete fertilizer containing the required minimum of trace elements in addition to N-P-K, of which 50% of the nitrogen shall be derived from an organic source as per CSI specifications.

Contractors are responsible for coordinating with the owners and appropriate public agencies to assist in locating and verifying all underground utilities prior to excavation.

All ideas, designs and plans indicated or represented by this drawing are owned by and are the exclusive property of Wayne K. Tonning,RLA.

The plan takes precedence over the plant list.

SPECIAL INSTRUCTIONS

General site and berm grading to +/- 1 inch (1") shall be provided by the general contractor. All finished site grading and final decorative berm shaping shall be provided by the landscape contractor.

All sod areas as indicated on the planting plan shall receive Stenotaphrum secundatum, St. Augustine 'Floratam' solid sod. It shall be the responsibility of the landscape contractor to include in the bid, the repair of any sod which may be damaged from the landscape installation operations.

All existing palms to be trimmed and cleaned.

TREE DISPOSITION

#	TREE NAME	DIAMETER	HEIGHT	CANOPHY	DISPOSITION	CONDITION
1	QUEEN PALM	12"	15'	25'	REMOVE	FAIR/GOOD
2	SOLITAIRE PALM	6"	15'	15'	REMOVE	FAIR/GOOD
3	GUMBO LIMBO	4"	10'	100'	REMOVE	FAIR/GOOD
4	SABAL PALM	12"	10'	75'	REMOVE	FAIR/GOOD
5	QUEEN PALM	9"	20'	75'	REMOVE	FAIR/GOOD
6	QUEEN PALM	9"	20'	0'	DEAD	DEAD
7	LIVE OAK	12"	20'	350'	REMOVE	FAIR/GOOD
8	GUMBO LIMBO	10"	30'	450'	REMOVE	FAIR/GOOD
9	GUMBO LIMBO	6"	25'	350'	REMOVE	FAIR/GOOD
10	BEAUTY LEAF	10"	30'	450'	REMOVE	FAIR/GOOD
11	VEITCHIA PALM	9"	15'	75'	REMOVE	FAIR/GOOD
12	VEITCHIA PALM	9"	15'	75'	REMOVE	FAIR/GOOD
13	VEITCHIA PALM	9"	15'	75'	REMOVE	FAIR/GOOD
14	VEITCHIA PALM	9"	15'	75'	REMOVE	FAIR/GOOD
15	VEITCHIA PALM	9"	15'	75'	REMOVE	FAIR/GOOD
16	GUMBO LIMBO	16"	20'	450'	REMOVE	FAIR/GOOD
17	CITRUS	4"	15'	200'	REMOVE	FAIR/GOOD
18	CRAPE MYRTLE	4"	15'	200'	REMOVE	FAIR/GOOD
19	VEITCHIA PALM	9"	15'	75'	REMOVE	FAIR/GOOD
20	VEITCHIA PALM	9"	15'	75'	REMOVE	FAIR/GOOD
21	LIVE OAK	24"	30'	750'	REMOVE	FAIR/GOOD
22	FICUS	6"	20'	400'	REMAIN	OFFSITE
23	FICUS	6"	20'	400'	REMAIN	OFFSITE
24	FICUS	6"	20'	400'	REMAIN	OFFSITE
25	FICUS	6"	20'	400'	REMAIN	OFFSITE
26	FICUS	16"	20'	400'	REMAIN	OFFSITE

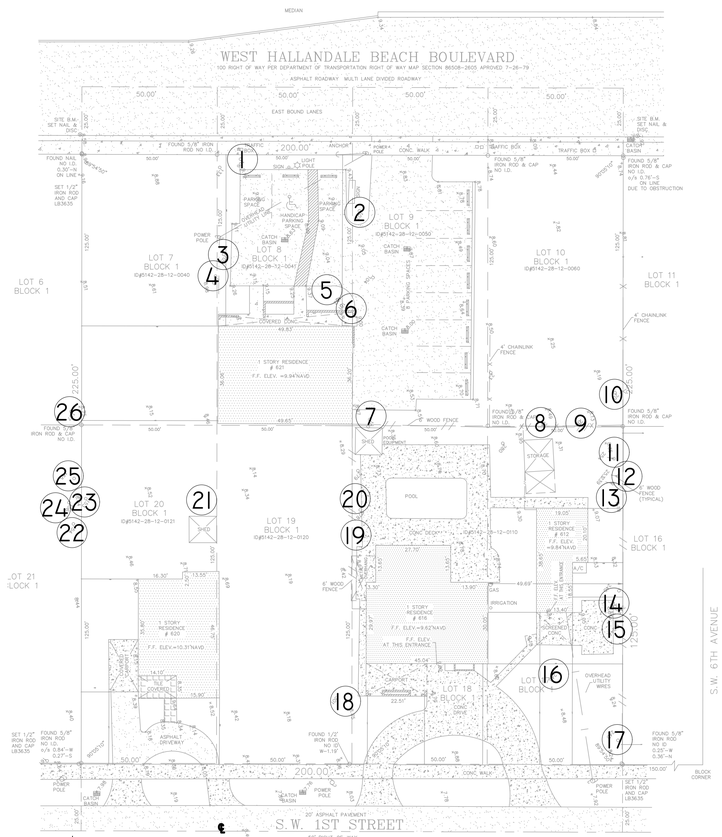

TREE DISPOSITION PLAN

SCALE: NTS

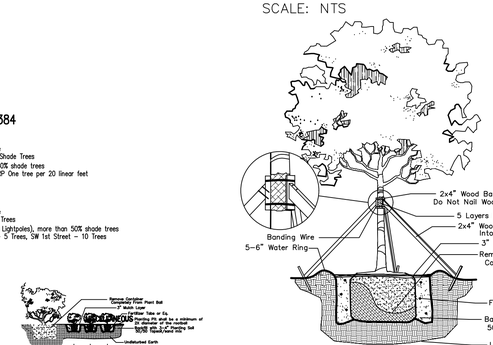

Large Tree Planting Detail

NTS

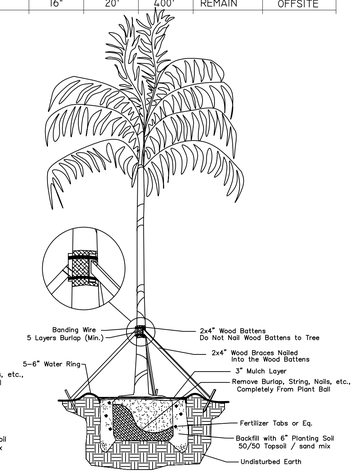

Palm Planting Detail

Not to Scale

LANDSCAPE CODES Sec. 32-384

REQUIRED : 30 Trees , 3 species

General Requirements: one tree per 1500 SF of site
Perimeter Trees : 50% of required trees are to be Shade Trees
Interior Landscape: One tree per terminal island, 50% shade trees
Street Trees: One tree per 40 linear feet, FPL RTRP One tree per 20 linear feet

PROVIDED : 30 Trees , 3 species

General Requirements: one tree per 1500 SF of site
Perimeter Trees : 50% of required trees are Shade Trees
Interior Landscape: 12 Islands, 10 Trees (2 Islands Lightpoles), more than 50% shade trees
Street Trees: 200 linear feet : Hallandale Beach - 5 Trees, SW 1st Street - 10 Trees

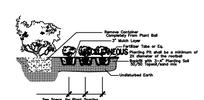

Shrub & Ground Cover Planting Detail

NTS

TONNING & ASSOCIATES, INC.
Landscape Architecture & Land Planning
Landscape Architect - Florida License #6666709
4855 NW 92 Terrace
Coral Springs, Florida 33067
Tel: 561-414-8269
Email: wtonning@tonningandassociates.com

DRWG. TITLE : LANDSCAPE PLAN

PROJECT : HALLANDALE SHOPS
625 WEST HALLANDALE BEACH BOULEVARD
HALLANDALE BEACH, FLORIDA 33009

CLIENT : KALLER AND ASSOCIATES, INC.

SEAL

WAYNE K. TONNING, RLA
RLA #6666709

PROJECT NO. 18-118
DRAWN BY WKT
DESIGNED BY WKT
CHECKED BY WKT
DATE : 05-06-18
DWG. NO. LP-1
SHT. NO. 1 of 1
REVISIONS :
06-21-18
09-21-18
11-14-18

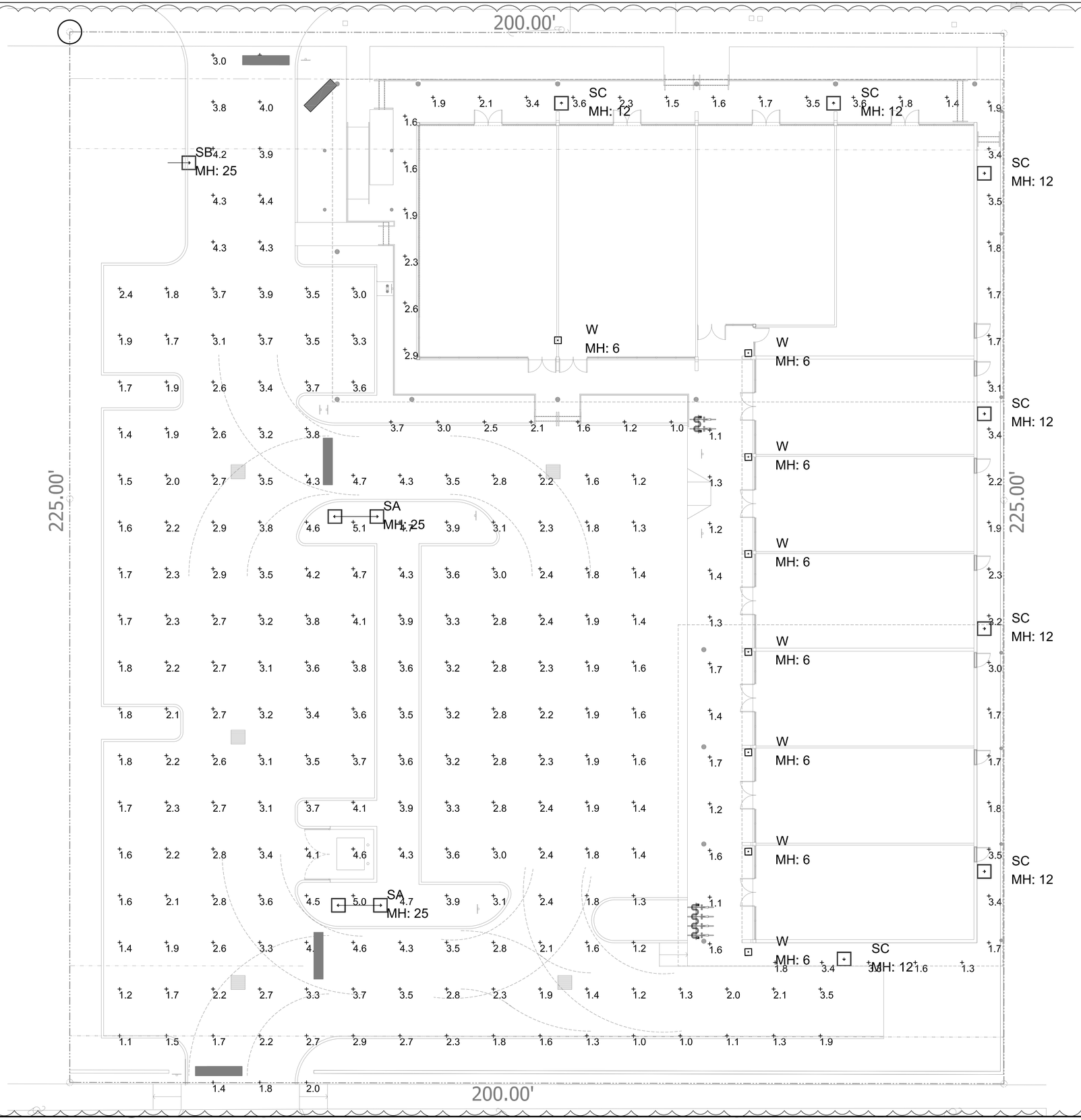

1 SITE PHOTOMETRICS PLAN
3/32" = 1'-0"

2

Luminaire Schedule					
Symbol	Qty	Label	Description	LLF	Lum. Lumens
	2	SA	XTRA LTG#: (2) VNTLEDM022005MNUIN410XXBLHO / MTD AT 25' AFG	0.900	20139
	1	SB	XTRA LTG#: VNTLEDM022004SNUINB10XXBLHO / MTD AT 25' AFG	0.900	20246
	7	SC	XTRA LTG#: VNTW-3500L-40K-DIM-3M-BZ / WALL MTD AT 12' AFG	0.900	3450
	8	W	LIGHTWAY #: HAMW-15-LED-U-18W / WALL MTD AT 6' AFG	0.900	819

Calculation Summary						
Label	CalcType	Units	Avg	Max	Min	Avg/Min	Max/Min
PARKING AREA	Illuminance	Fc	2.76	5.1	1.0	2.76	5.10
WALKWAY AREAS	Illuminance	Fc	2.37	3.6	1.3	1.82	2.77

2 PHOTOMETRICS VALUES

Kaller Architecture
AA# 26001212
2417 Hollywood Blvd.
Hollywood Florida 33020
954.920.5746
joseph@kallerarchitects.com
www.kallerarchitects.com

SEAL

JOSEPH B. KALLER
FLORIDA R.A. # 0009239

PROJECT TITLE
W HALLANDALE SHOPPES
613 -625 W. HALLANDALE BEACH BLVD
HALLANDALE BEACH, FL 33009

SHEET TITLE
SITE PHOTOMETRICS

REVISIONS

No.	DATE	DESCRIPTION
1	9/21/18	MDR COMMENTS
2	11.15.18	CITY COMMENTS

This drawing, as an instrument of service, is and shall remain the property of the Architect and shall not be reproduced, published or used in any way without the permission of the Architect.

PROJECT No.: 18048
DATE: 08-30-18
DRAWN BY: GMV / JP
CHECKED BY: JBK

SHEET
SPH-1

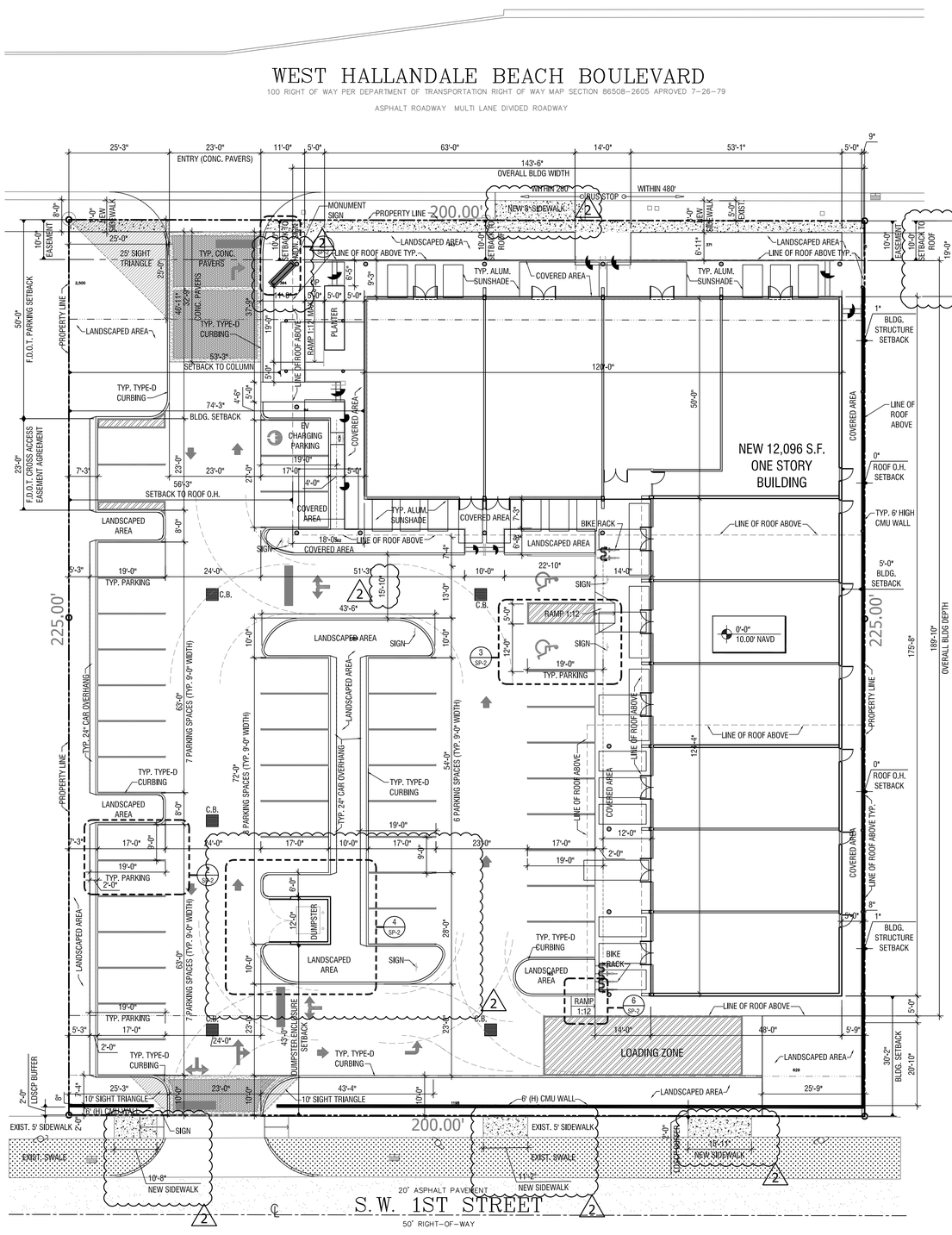

ALL SIGNAGE TO COMPLY WITH THE REQUIREMENTS OF THE CITY OF HALLANDALE BEACH'S ZONING AND LAND DEVELOPMENT CODE BASED ON THE B-G ZONING DISTRICT.

1 NEW SITE PLAN
1/16" = 1'-0"

LEGAL DESCRIPTION

LOT 7 LESS THE NORTH 25 FEET, BLOCK 1 OF BENNET PIPES FIRST ADDITION TO TOWN OF HALLANDALE, ACCORDING TO THE PLAT THEREOF, AS RECORDED IN PLAT BOOK 18, PAGE 5, OF THE PUBLIC RECORDS OF BROWARD COUNTY, FLORIDA, ID#5142-28-12-0040
LOT 8 LESS THE NORTH 25 FEET, BLOCK 1 OF BENNET PIPES FIRST ADDITION TO TOWN OF HALLANDALE, ACCORDING TO THE PLAT THEREOF, AS RECORDED IN PLAT BOOK 18, PAGE 5, OF THE PUBLIC RECORDS OF BROWARD COUNTY, FLORIDA, ID#5142-28-12-0041
LOT 9 LESS THE NORTH 25 FEET, BLOCK 1 OF BENNET PIPES FIRST ADDITION TO TOWN OF HALLANDALE, ACCORDING TO THE PLAT THEREOF, AS RECORDED IN PLAT BOOK 18, PAGE 5, OF THE PUBLIC RECORDS OF BROWARD COUNTY, FLORIDA, ID#5142-28-12-0050
LOT 10 LESS THE NORTH 25 FEET, BLOCK 1 OF BENNET PIPES FIRST ADDITION TO TOWN OF HALLANDALE, ACCORDING TO THE PLAT THEREOF, AS RECORDED IN PLAT BOOK 18, PAGE 5, OF THE PUBLIC RECORDS OF BROWARD COUNTY, FLORIDA, ID#5142-28-12-0060
LOTS 17 AND 18, BLOCK 1 OF BENNETT-PIPES FIRST ADDITION TO TOWN OF HALLANDALE, ACCORDING TO THE PLAT THEREOF, AS RECORDED IN PLAT BOOK 18, PAGE 5, OF THE PUBLIC RECORDS OF BROWARD COUNTY, FLORIDA, ID#5142-28-12-0110
LOT 20 BLOCK 1, OF BENNET PIPES FIRST ADDITION TO TOWN OF HALLANDALE, ACCORDING TO THE PLAT THEREOF, AS RECORDED IN PLAT BOOK 18, PAGE 5, OF THE PUBLIC RECORDS OF BROWARD COUNTY, FLORIDA, ID#5142-28-12-0121
LOT 19, BLOCK 1 OF BENNET PIPES FIRST ADDITION TO TOWN OF HALLANDALE, ACCORDING TO THE PLAT THEREOF, AS RECORDED IN PLAT BOOK 18, PAGE 5, OF THE PUBLIC RECORDS OF BROWARD COUNTY, FLORIDA, ID#5142-28-12-0120

PROPERTY ADDRESS

613 - 625 WEST HALLANDALE BEACH BLVD.
HALLANDALE BEACH, FL 33009

JURISDICTION:

CITY OF HALLANDALE BEACH
BROWARD COUNTY
STATE OF FLORIDA

BUILDING CODES:

FLORIDA BUILDING CODE 2017 6th EDITION
NFPA 1, NFPA 101, LIFE SAFETY CODE, 2018 EDITION
FIRE CODE, 2018 EDITION
CITY OF HOLLYWOOD ZONING CODE

SITE INFORMATION

- EXISTING ZONING:	B/-G (BUSINESS GENERAL)
- LAND USE DESIGNATION:	RDO (REDEVELOPMENT OVERLAY)
- CURRENT USE:	VACANT / SINGLE FAMILY RESIDENTIAL
- PROPOSED USE:	COMMERCIAL-RETAIL
- LOT AREA:	45,000 S.F. (1.03 ACRES)
- ADJACENT ZONING:	NORTH B-G (BUSINESS GENERAL) EAST B-G (BUSINESS GENERAL) SOUTH RS-7 (RESIDENTIAL SINGLE FAMILY) WEST B-G (BUSINESS GENERAL)
- FEMA FLOOD HAZARD:	ZONE-X (0.2% ANNUAL CHANCE OF FLOOD HAZARD)

- SETBACKS:	REQUIRED	PROVIDED
(a) FRONT (HALLANDALE BEACH BLVD)	15'-0" MIN	10'-1" (MONUMENT SIGN) - 10'-6" (BUILDING)
(b) SIDE INTERIOR (WEST)	0'-0"	3'-8" (TO MONUMENT SIGN)
(c) SIDE INTERIOR (EAST)	0'-0"	5'-9" (BUILDING) - 1" (PL WALL)
(d) REAR (S.W. 1ST STREET)	25'-0"	28'-6"

- PARKING:	REQUIRED	PROVIDED
RETAIL (1:300 S.F.)	12,096 S.F./ 300 = 41 SPACES	41 SPACES (INCL. 2 ADA) 2 (+2 TEMP. SPACES @ F.D.O.T. CROSS ACCESS EASEMENT) 43 SPACES TOTAL
- LOADING:		
COMMERCIAL	2 SPACES	1 SPACE (VARIANCE REQUESTED)
- PERVIOUS		
COMMERCIAL	15% (MIN) OR 6,750 S.F.	LANDSCAPE 7,579 S.F. OR 16.84% 2

SITE AREAS BREAKDOWN

1. BUILDING	12,096 S.F.
2. COLUMNS	13 S.F.
3. PLANTER	95 S.F.
4. PERIMETER SITE WALLS	250 S.F.
5. DUMPSTER	120 S.F.
6. MONUMENT SIGN	14 S.F.
7. SIDEWALKS	5,861 S.F.
8. CURBING	492 S.F.
9. PAVEMENT	17,141 S.F.
10. PAVERS	755 S.F.
13. LANDSCAPING	7,579 S.F.
14. GREEN AREA (F.D.O.T. CROSS ACCESS)	155 S.F.
15. GREEN AREA (TYP. 24" PARKING OVERHANG)	429 S.F.
TOTAL	45,000 S.F.

BUILDING SUMMARY

	REQUIRED/ ALLOWED	PROVIDED
- BUILDING FRONTAGE:	60% MIN (120'-0")	120'-0" (60%)
- BUILDING AREA:	-	12,096 S.F.
- BUILDING HEIGHT:	350'-0"	19'-0" - 25'-0"

VARIANCES

SETBACKS	REQUIRED	PROVIDED
A) LOADING AREA	2	1

2 PROJECT DATA

KallerArchitecture
AA# 26001212
2417 Hollywood Blvd.
Hollywood Florida 33020
954.920.5746
joseph@kallerarchitects.com
www.kallerarchitects.com

SEAL

JOSEPH B. KALLER
FLORIDA R.A. # 0009239

PROJECT TITLE
W HALLANDALE SHOPPES
613 -625 W. HALLANDALE BEACH BLVD
HALLANDALE BEACH, FL 33009

SHEET TITLE
PROJECT DATA
NEW SITE PLAN

REVISIONS

No.	DATE	DESCRIPTION
1	9/21/18	MDR COMMENTS
2	11.07.18	CITY COMMENTS

This drawing, as an instrument of service, is and shall remain the property of the Architect and shall not be reproduced, published or used in any way without the permission of the Architect.

PROJECT No.: 18048
DATE: 08-30-18
DRAWN BY: GMV / JP
CHECKED BY: JBK

SHEET
SP-1.0

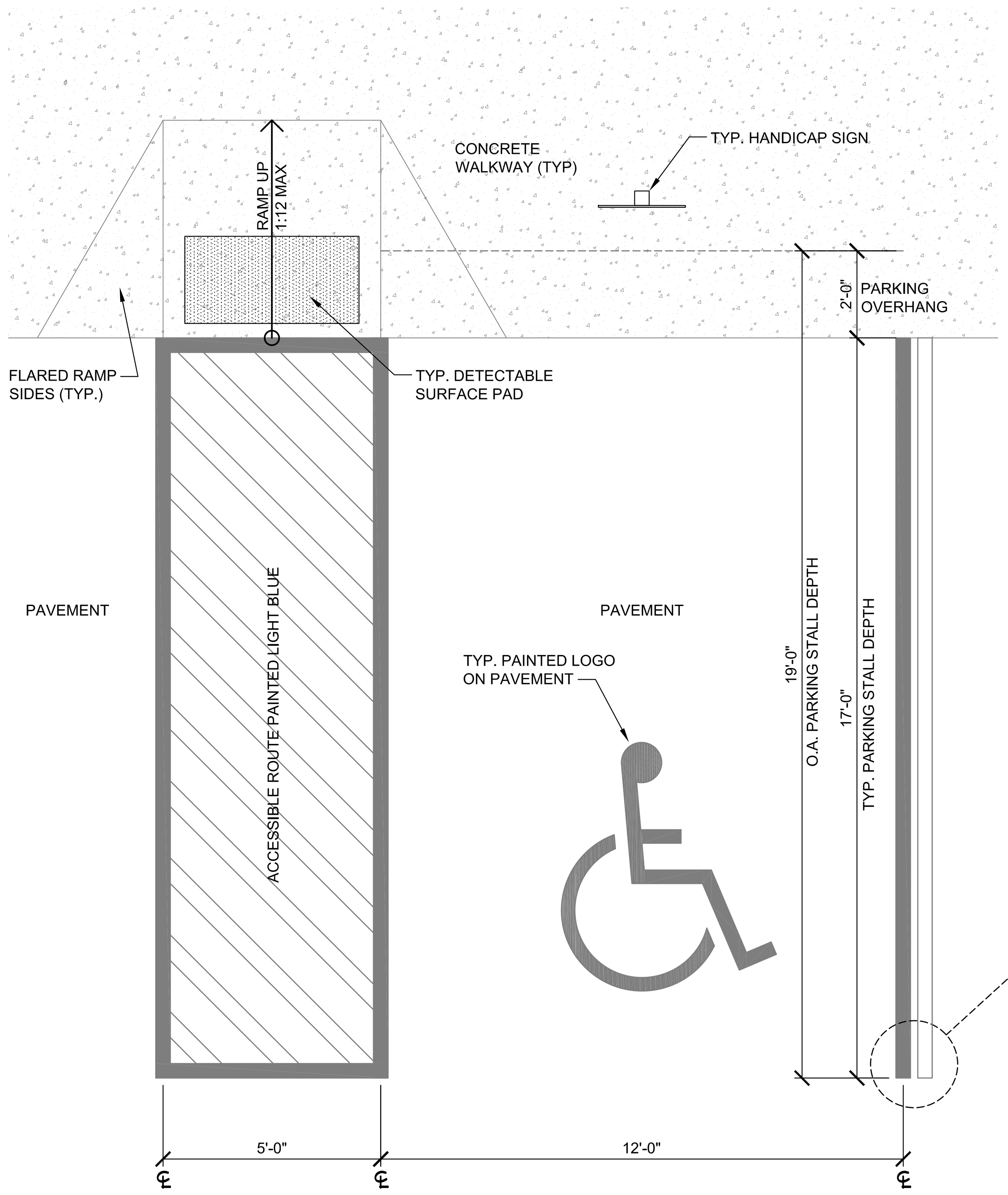

NOTE: REFER TO CIVIL PLANS FOR COMPLETE SIGNAGE AND STRIPING DETAILS

ADA PARKING STANDARDS

ANY PART OF AN ACCESSIBLE ROUTE WITH A SLOPE GREATER THAN 1:20 SHALL BE CONSIDERED A RAMP AND SHALL COMPLY WITH FOLLOWING:

SLOPE AND RISE -

THE LEAST POSSIBLE SLOPE SHALL BE USED FOR ANY RAMP. THE MAXIMUM SLOPE OF A RAMP IN NEW CONSTRUCTION SHALL BE 1:12. THE MAXIMUM RISE FOR ANY RUN SHALL BE 30 IN.

CLEAR WIDTH -

1. MINIMUM CLEAR WIDTH OF A RAMP SHALL BE 44" CLEAR
2. RAMPS THAT ARE PART OF A REQUIRED MEANS OF EGRESS SHALL BE NOT LESS THAN 44 INCHES CLEAR

LANDINGS -

RAMPS SHALL HAVE LEVEL LANDINGS AT BOTTOM AND TOP OF EACH RAMP AND EACH RAMP RUN.
LANDINGS SHALL HAVE THE FOLLOWING FEATURES.

1. THE LANDING SHALL BE AT LEAST AS WIDE AS THE RAMP RUN LEADING TO IT.
2. IF RAMPS CHANGE DIRECTION AT LANDINGS, THE MINIMUM LANDING SIZE SHALL BE 60 INCHES BY 60 INCHES
3. IF A DOORWAY IS LOCATED AT A LANDING, THEN THE AREA IN FRONT OF THE DOORWAY SHALL COMPLY FBC ACCESSIBILITY 2017

HANDRAILS -

IF A RAMP RUN HAS A RISE GREATER THAN 6 IN OR A HORIZONTAL PROJECTION GREATER THAN 72 IN THEN IT SHALL HAVE HANDRAILS ON BOTH SIDES. HANDRAILS ARE NOT REQUIRED ON CURB RAMPS OR ADJACENT TO SEATING IN ASSEMBLY AREAS. HANDRAILS SHALL COMPLY WITH 4.26 OF THE ADA CODE AND SHALL HAVE THE FOLOWING FEATURES:

1. HANDRAILS SHALL BE PROVIDED ALONG BOTH SIDES OF RAMP SEGMENTS. THE INSIDE HANDRAIL ON SWITCHBACK OR DOGLEG RAMPS SHALL ALWAYS BE CONTINUOUS.
2. HANDRAILS ON RAMPS WHICH ARE NOT CONTINUOUS SHALL EXTEND NOT LESS THAN 18" BEYOND THE SLOPED SEGMENT AT BOTH THE TOP AND BOTTOM, AND SHALL BE PARALLEL TO THE FLOOR OR GROUND SURFACE.
3. THE CLEAR SPACE BETWEEN THE HANDRAIL AND THE WALL SHALL BE 1-1/2 INCH
4. GRIPPING SURFACES SHALL BE CONTINUOUS.
5. TOP OF HANDRAIL GRIPPING SURFACES SHALL BE MOUNTED BETWEEN 34 IN AND 38 IN ABOVE RAMP SURFACES.
6. ENDS OF HANDRAILS SHALL BE EITHER ROUNDED OR RETURNED SMOOTHLY TO FLOOR, WALL OR POST
7. HANDRAILS SHALL NOT ROTATE WITHIN THEIR FITTINGS.

CROSS SLOPE SURFACES -

THE CROSS SLOPE OR RAMP SURFACES SHALL BE NO GREATER THAN 1:50. RAMP SURFACES SHALL COMPLY W/ CHAPTER 4 OF FBC 2017 ACCESSIBILITY CODE.

EDGE PROTECTION -

RAMPS AND LANDINGS WITH DROP-OFFS SHALL HAVE CURBS, WALLS, RAILINGS OR PROJECTING SURFACES THAT PREVENT PEOPLE FROM SLIPPING OF THE RAMP. CURBS SHALL BE A MINIMUM OF 2 IN HIGH

OUTDOOR CONDITIONS -

OUTDOOR RAMPS AND THEIR APPROACHES SHALL BE DESIGNED SO THAT WATER WILL NOT ACCUMULATE ON WALKING SURFACES.

1 TYP. HANDICAP PARKING STANDARDS

N.T.S.

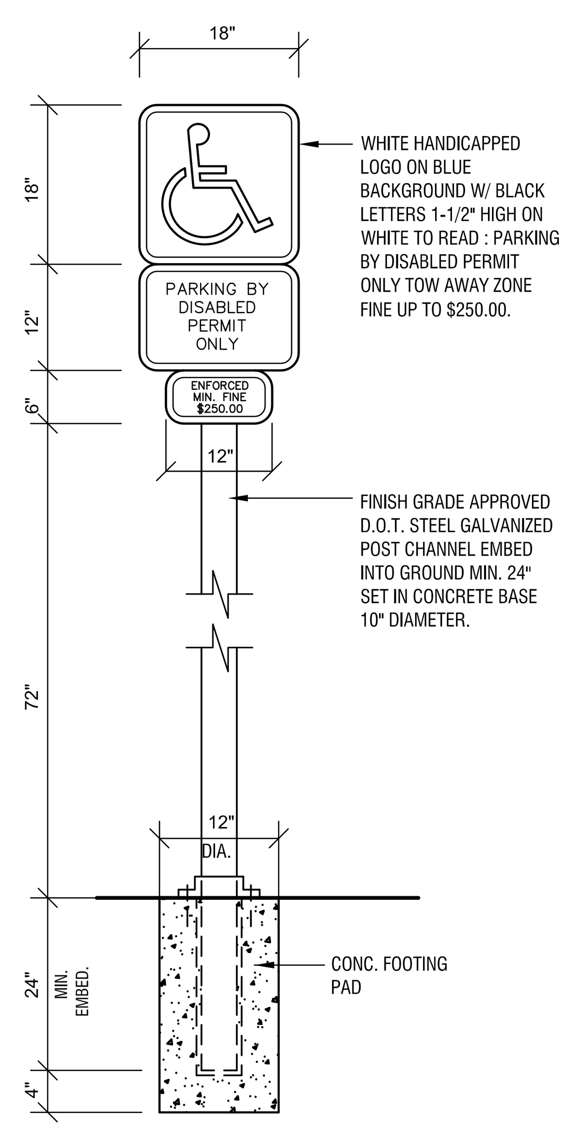

NOTES:

1. HANDICAPPED SIGN SHALL BE OF F.D.O.T. (BLUE) COLOR.
2. PAVEMENT BORDER LINES (ONE ON EACH SIDE) OF THE HANDICAPPED SPACE WILL BE OF A BLUE COLOR OF A QUALITY EQUIVALENT TO SUPER STRIPE TRAFFIC PAINT SOLD BY FOX VALLEY SYSTEMS, INC. OF CARY, ILLINOIS, PHONE 1-800-323-4770. SHALL BE STRIPED ON THE WEARING SURFACE OF EACH SPACE DESIGNED FOR THE HANDICAP PARKING SPACE.
3. ALL LETTERS IN MIDDLE PORTION OF SIGN ARE 1.5" SERIES AT 1.5" SPACING.
4. ALL LETTERS IN BOTTOM PORTION OF SIGN ARE 1" SERIES AT 1" SPACING.
5. MINIMUM FINE SHALL BE $250.00 OR AS ESTABLISHED BY GOVERNING MUNICIPALITY.

EACH ACCESIBLE PARKING SPACE MUST BE PROMINENTLY OUTLINED WITH BLUE PAINT AND REPAINTED AS NECESSARY TO BE CLEARLY DISTINGUISHABLE AND MUST BE POSTED WITH A PERMANENT ABOVE GRADE SIGN BEARING INTERNATIONAL SYMBOL OF ACCESSIBILITY MEETING COLORS AND DESIGNS APPROVED BY THE DEPARTMENT OF TRANSPORTATION CAPTIONED "PARKING BY DISABLED PERMIT ONLY" AND COMPLYING WITH THE GOVERNING MUNICIPALITY IN WHICH PROJECT IS LOCATED AND MEETING FLORIDA A.D.A. COMPLIANCE STANDARD AS MINIMUM.

2 TYP. HANDICAP PARKING SIGN

N.T.S.

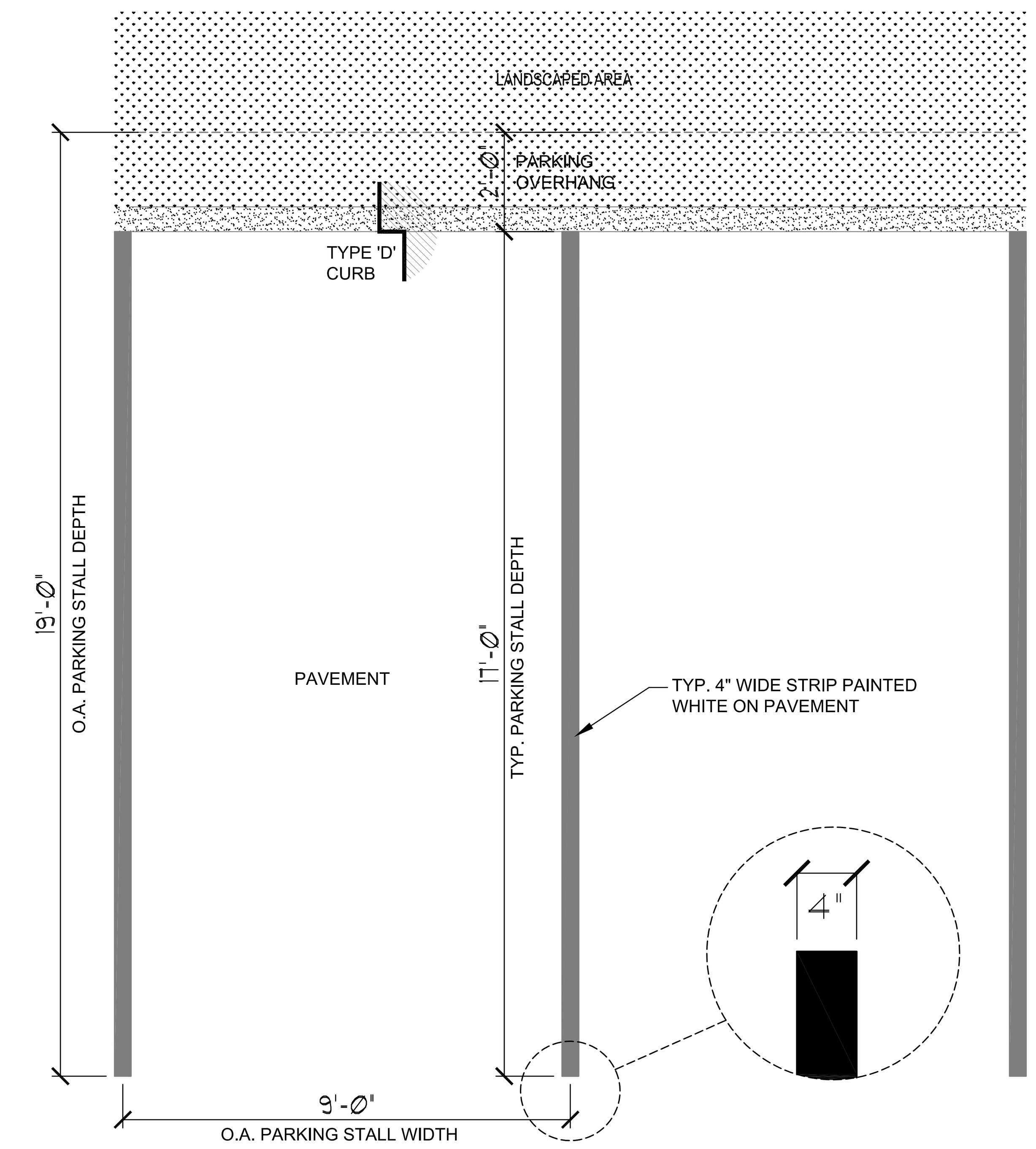

3 TYP. PARKING STALL STANDARDS

N.T.S.

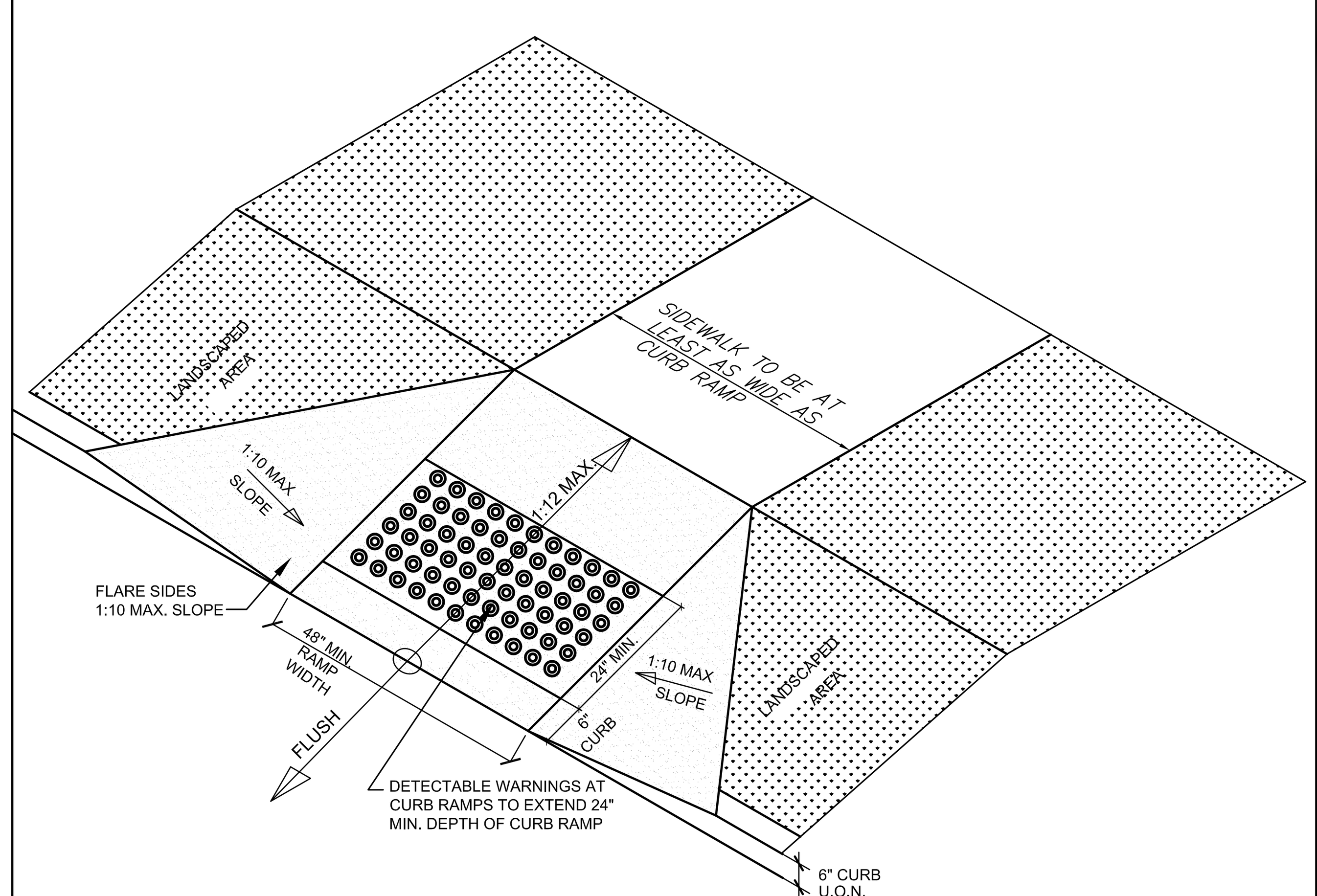

4 TYPE-'D' CURB DETAIL

N.T.S.

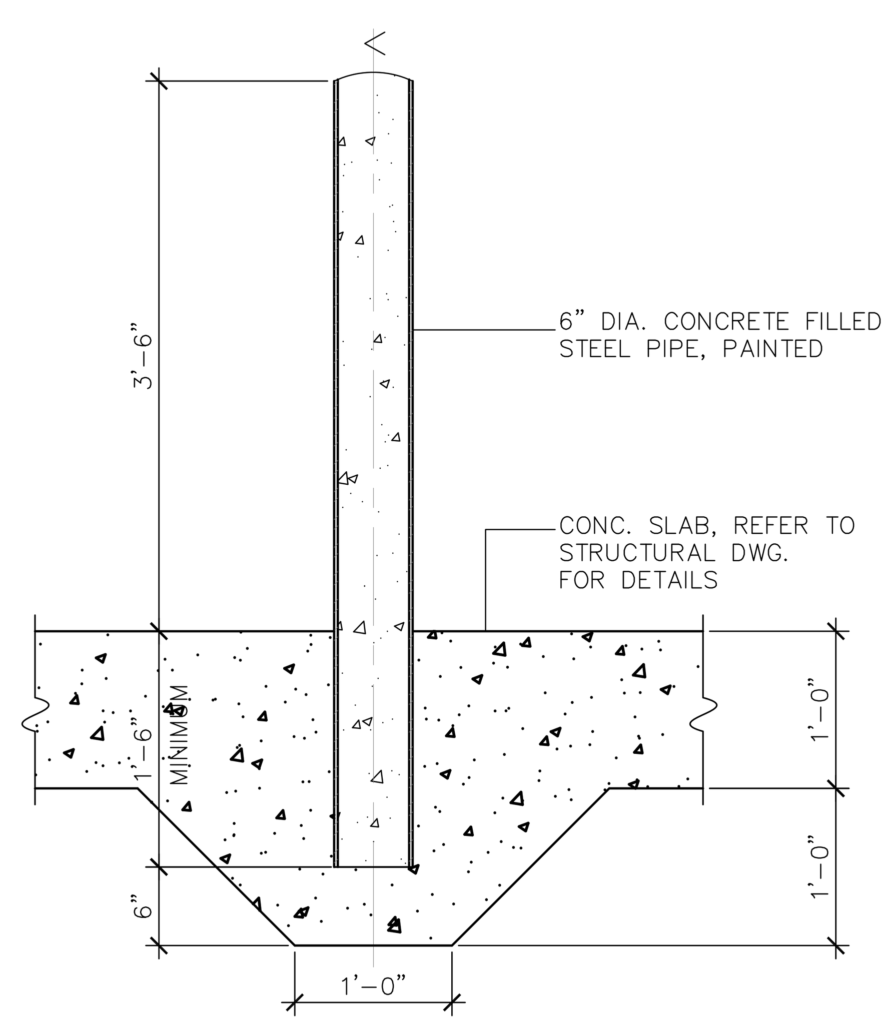

5 BOLLARD GARD DETAIL

N.T.S.

HI ROLLER

Submittal Sheet

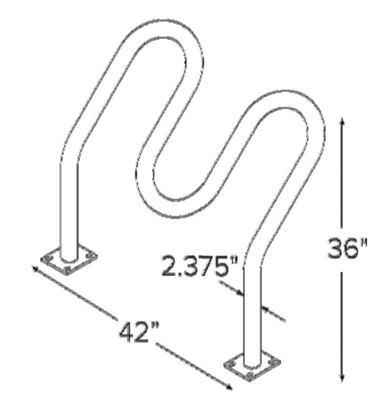

CAPACITY		HI2H: 4 Bikes HI3H: 5 Bikes HI4H: 6 Bikes HI5H: 7 Bikes
MATERIALS		2.375" OD Schedule 40 Steel Pipe
FINISHES	☐	**Galvanized** An after fabrication hot dipped galvanized finish is our standard option.
	☐	**Powder Coat** Our powder coat finish assures a high level of adhesion and durability by following these steps: 1. Sandblast 2. Epoxy primer electrostatically applied 3. Final thick TGIC polyester powder coat
	☐	**Thermoplastic** In addition to an increased thickness (6-10mils), the thermoplastic finish covers a galvanized layer and offers superior impact resistance over powder coating.
	☐	**Stainless** Stainless Steel: 304 grade stainless steel material finished in either a high polished shine or a satin finish.
MOUNT OPTIONS	☐	**In-ground** In ground mount is embedded into concrete base. Specify in ground mount for this option.
	☐	**Surface** Foot Mount has two 5"x6"x.25" feet with four anchors per foot. Specify foot mount for this option.

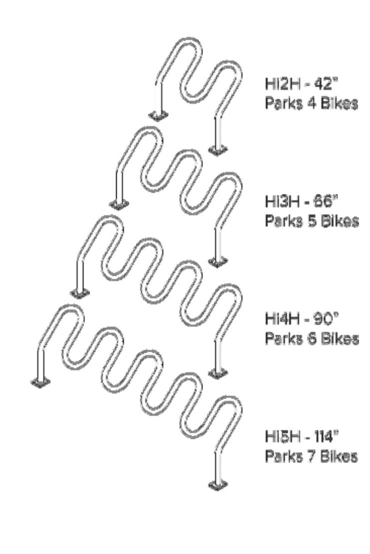

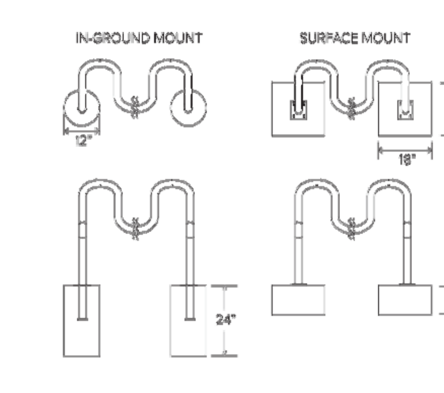

DERO
www.dero.com | 1-888-337-6729

© 2018 Dero

6 BIKE RACK DETAILS

N.T.S.

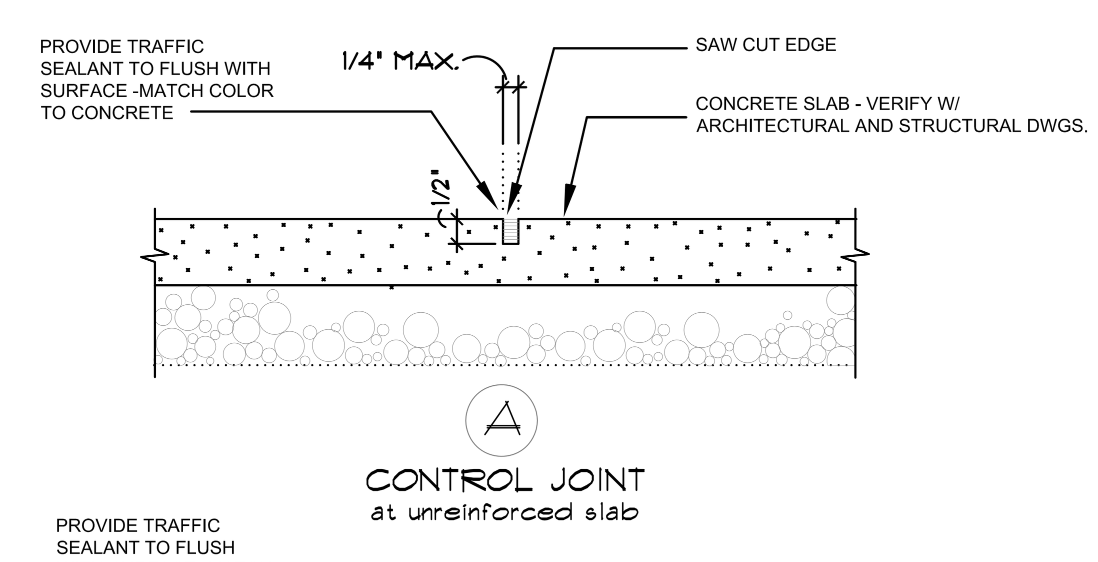

A
CONTROL JOINT
at unreinforced slab

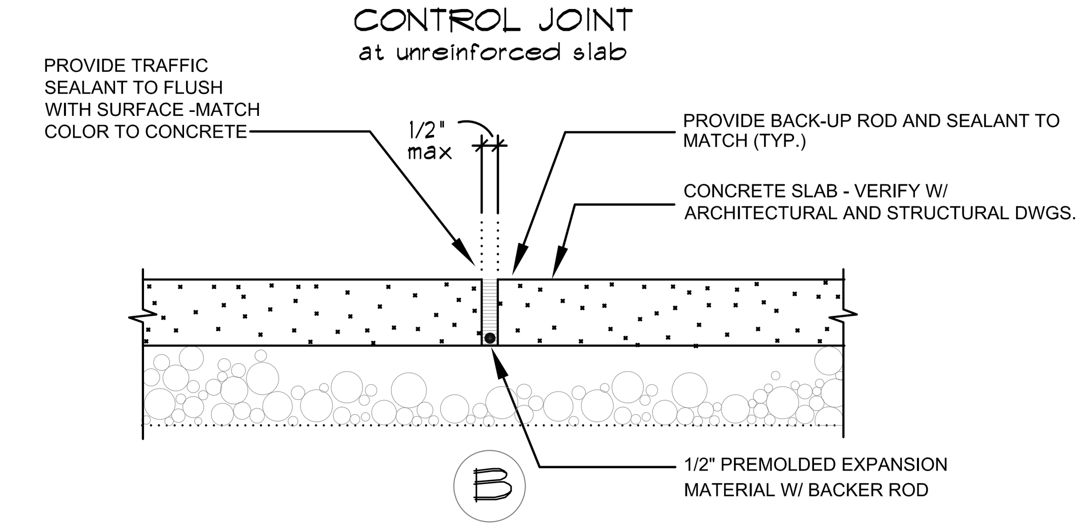

B
EXPANSION JOINT
at unreinforced slab

7 TYP. SLAB JOINT DETAILS

N.T.S.

Kaller Architecture
AA# 26001212
2417 Hollywood Blvd.
Hollywood Florida 33020
954.920.5746
joseph@kallerarchitects.com
www.kallerarchitects.com

SEAL

JOSEPH B. KALLER
FLORIDA R.A. # 0009239

PROJECT TITLE
W HALLANDALE SHOPPES
613 -625 W. HALLANDALE BEACH BLVD
HALLANDALE BEACH, FL 33009

SHEET TITLE
TYP. SITE DETAILS

REVISIONS

No.	DATE	DESCRIPTION
1	9/21/18	MDR COMMENTS

This drawing, as an instrument of service, is and shall remain the property of the Architect and shall not be reproduced, published or used in any way without the permission of the Architect.

PROJECT No.: 18048
DATE: 08-30-18
DRAWN BY: GMV / JP
CHECKED BY: JBK

SHEET
SP-2.1

Bidders shall use complete sets of Bidding Documents in preparing bids; neither the Owner nor Architect assumes responsibility for errors or misinterpretations resulting from the use of incomplete or preliminary sets of Building Documents. The intent of the Contract Documents is to include all items necessary for the proper execution and completion of the work by the Contractor. The Contractor Documents are complimentary, and what is required by one shall be as binding as if required by all; performance by the Contractor shall be required only to the extent consistent with the Contract Documents and reasonably inferable from them as being necessary to produce the intended results.

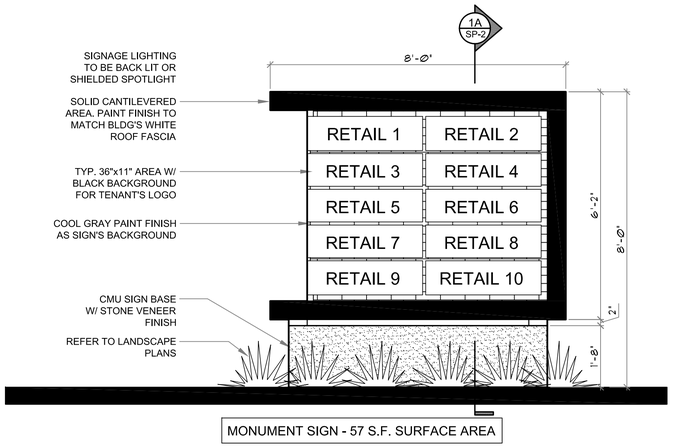

MONUMENT SIGN - 57 S.F. SURFACE AREA

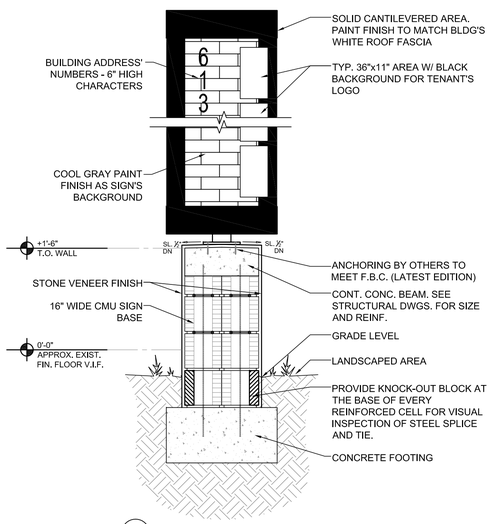

1A MONUMENT SIGN SECTION

1 MONUMENT SIGN
N.T.S.

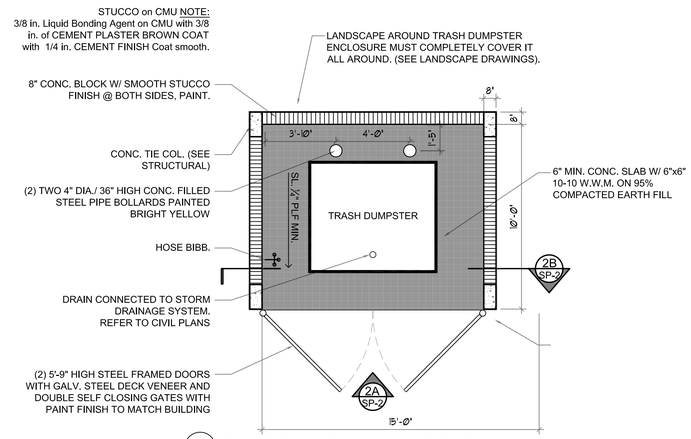

2 CONC DUMPSTER ENCLOSURE PLAN

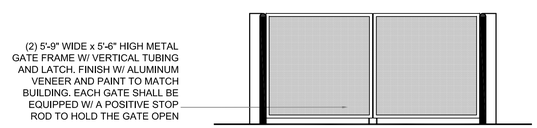

2A DUMPSTER ENCLOSURE ELEVATION

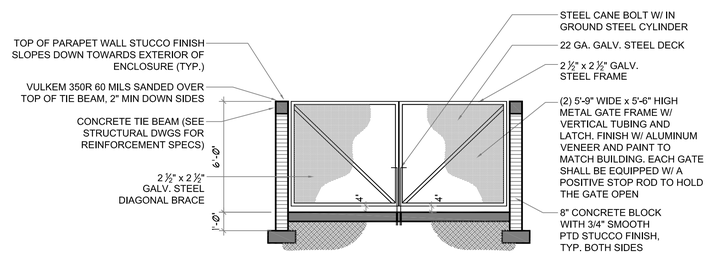

2B DUMPSTER ENCLOSURE SECTION

2 DUMPSTER ENCLOSURE
N.T.S.

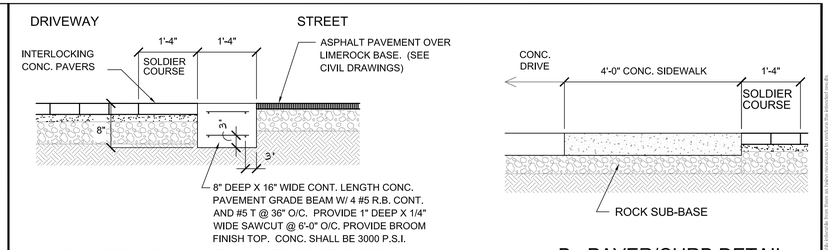

A. PAVER/ASPHALT ABUTMENT DETAIL

B. PAVER/CURB DETAIL

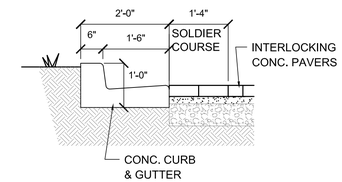

C. PAVER/GUTTER DETAIL

PAVER GENERAL NOTES

1. ALL PAVERS SHALL BE AS MANUF. BY PAVER MODULE HIGH TRAFFIC CONC. PSI STRENGTH OR APPROVED EQUAL.
2. ALL PERIMETER EDGES SOLDIER COURSE SHALL BE DOUBLE 4 X 8 PAVER 16" WIDE.
3. PAVER STYLE, COLOR AND PATTERN SHALL BE 4" X 8" GREY MIX COLOR "BROWN COLOR MIX" AND SHALL BE SET IN RUNNING BOND PATTERN. SUBMIT SAMPLES FOR APPROVAL PRIOR TO MANUFACTURING OR INSTALLING.
4. NO JOINT SHALL EXCEED 1/8"
5. ALL PAVERS SHALL BE SET OVER LEVELING SCREED SAND 2" THICK MAX.
6. ALL PAVERS SHALL BE SET OVER A MINIMUM OF 8" THICK CRUSHED AND MACHINE COMPACTED D.O.T. APPROVED LIMEROCK BASE.
7. ALL AREAS TO RECEIVE PAVER SHALL BE CUT DOWN MINUMUM 13" AND CLEARED OF DELETRIOUS MATERIALS.

3 TYP. PAVERS' DETAILS
N.T.S.

CURB RAMP GENERAL NOTES:

- CURB RAMPS SHALL BE PROVIDED WHEREVER AN ACCESSIBLE ROUTE CROSSES A CURB.

- NO CURB RAMP MAY EXIST WITHIN ANY DISABLED PARKING STALL OR AISLE.

- MAXIMUM SLOPE OF ADJOINING GUTTERS, ROAD SURFACE IMMEDIATELY ADJACENT TO CURB RAMP OR ACCESSIBLE ROUTE SHALL NOT EXCEED 1:20.

- THE MAXIMUM SLOPE OF ANY RAMP SHALL NOT EXCEED 1:12 AND WIDTH 48" MINIMUM.

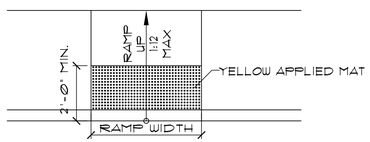

TYP. PLAN VIEW

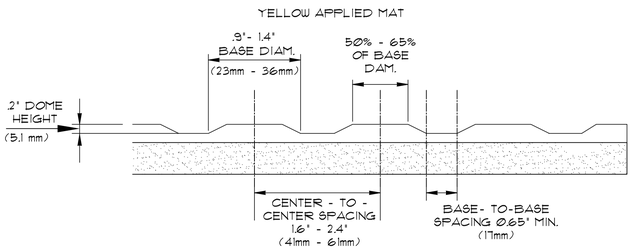

- DETECTABLE WARNING SURFACES SHALL CONTRAST VISUALLY WITH ADJACENT WALKING SURFACES EITHER LIGHT-ON-DARK, OR DARK-ON-LIGHT.
- DETECTABLE WARNING SURFACES AT PLATFORM BOARDING EDGES SHALL BE 24 INCHES (610 mm) WIDE AND SHALL EXTEND THE FULL LENGTH OF THE PUBLIC USE AREAS OF THE PLATFORM.
- CURB RAMPS SUBJECT TO DEPARTMENT OF TRANSPORTATION REGULATION 49 CFR 37.21 SHALL HAVE A DETECTABLE WARNING COMPLYING WITH FBC 705. THE DETECTABLE WARNING SHALL EXTEND THE FULL WIDTH OF THE CURB RAMP (EXCLUSIVE OF FLARED SIDES) AND SHALL EXTEND EITHER THE FULL DEPTH OF THE CURB RAMP OR 24 INCHES (610mm) DEEP MINIMUM MEASURE FROM THE BACK OF THE CURB ON THE RAMP SURFACE.
- DETECTABLE WARNING AT CURB RAMPS SUBJECT TO DOT REGULATION 49 CFR 37.21
- ALL RAMPS SHALL RECEIVE A DETECTABLE TREATMENT.

6 DETECTABLE SURFACE DETAILS
N.T.S.

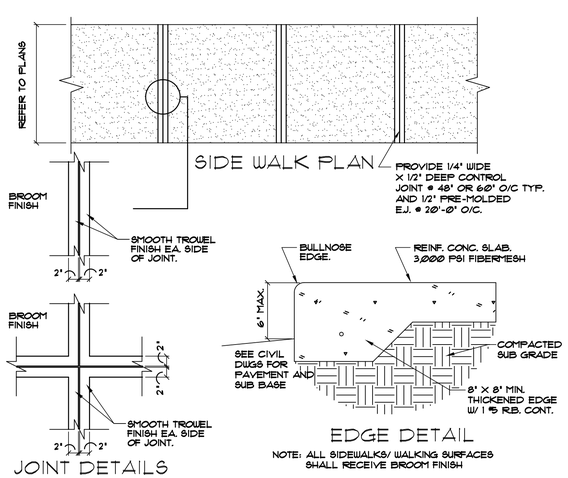

4 TYP. SIDEWALK DETAILS
N.T.S.

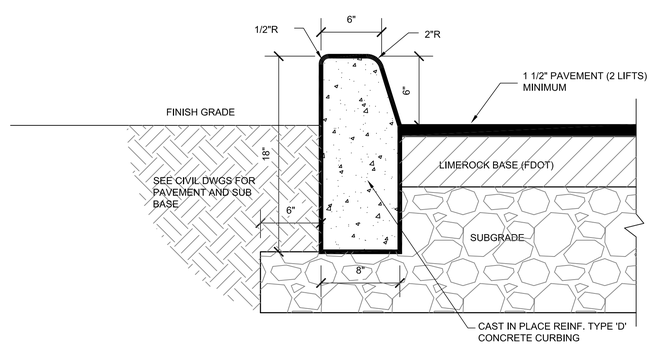

5 TYPE 'D' CURB
N.T.S.

Kaller Architecture
AA# 26001212
2417 Hollywood Blvd.
Hollywood Florida 33020
954.920.5746
joseph@kallerarchitects.com
www.kallerarchitects.com

SEAL

JOSEPH B. KALLER
FLORIDA R.A. # 0009239

PROJECT TITLE
W HALLANDALE SHOPPES
613 -625 W. HALLANDALE BEACH BLVD
HALLANDALE BEACH, FL 33009

SHEET TITLE
TYP. SITE DETAILS

REVISIONS

No.	DATE	DESCRIPTION
1	9/21/18	MDR COMMENTS

This drawing, as an instrument of service, is and shall remain the property of the Architect and shall not be reproduced, published or used in any way without the permission of the Architect.

PROJECT No.:	18048
DATE:	08-30-18
DRAWN BY:	GMV / JP
CHECKED BY:	JBK

SHEET

SP-2.0

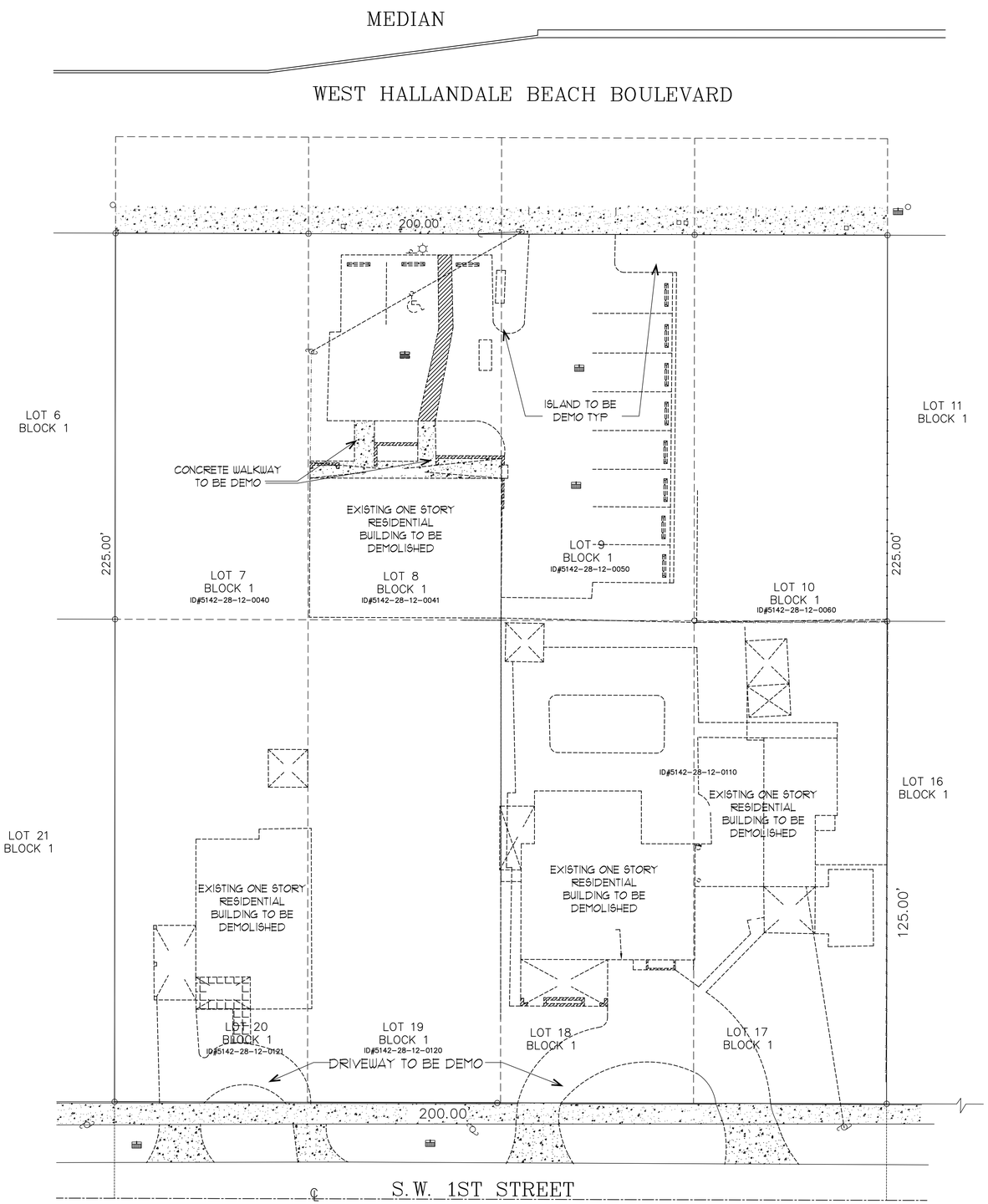

1 DEMOLITION SITE PLAN
1/16" = 1'-0"

REQUIREMENTS INCLUDED :

A.

1. COORDINATE WORK OF TRADES AND SCHEDULE ELEMENTS ALTERATIONS AND RENOVATION WORK BY PROCEDURESAND METHODS TO EXPEDITE COMPLETION OF THE WORK.
2. CUT, MOVE OR REMOVE ITEMS AS NECESSARY TO PROVIDE ACCESS OR TO ALLOW ALTERATIONS AND NEW WORK TO PROCEED. INCLUDE SUCH ITEM AS :

a. REPAIR OR REMOVAL OF HAZARDOUS OR UNSANITARY CONDITIONS.
b. REMOVAL OF ABANDONED ITEMS AND ITEMS SERVING NO USEFUL PURPOSE, SUCH AS ABANDONED PIPING, CONDUIT, AND WIRING.
c. REMOVAL OF UNSUITABLE OR EXTRANEOUS MATERIALS NOT MARKED FOR SALVAGE, SUCH AS ABANDONED EQUIPMENT AND DEBRIS INCLUDING ROTTED WOOD, RUSTED METALS AND DETERIORATED CONCRETE.

B.

1. CONDITIONS AND REQUIREMENTS: THE DEMOLITION CONTRACTOR SHALL OBTAIN ALL PERMITS REQUIRED FOR HAULING AND LEGALLY DISPOSING OF MATERIALS REMOVED IN DEMOLITION WORK.
2. PROCEDURES: THE PROCEDURES PROPOSED FOR THE ACCOMPLISHMENT OF SALVAGE AND DEMOLITION WORK SHALL PROVIDE FOR SAFE CONDUCT OF THE WORK, CAREFUL REMOVAL AND DISPOSITION OF MATERIALS, PROTECTION OF PROPERTY, COORDINATION WITH WORK OF OTHERS IN PROGRESS, AND TIMELY DISCONNECTION OF UTILITY SERVICES. THE PROCEDURES SHALL INCLUDE A DETAILED DESCRIPTION OF METHODS AND EQUIPMENT TO BE USED FOR EACH OPERATION.
3. PARTITION: REMOVE ALL EXISTING INTERIOR PARTITIONS AND RELATED UTILITIES AS INDICATED IN THE DEMOLITION PLAN.
4. DUST CONTROL: THE AMOUNT OF DUST RESULTING FROM DEMOLITION SHALL BE CONTROLLED TO PREVENT THE THE SURROUNDING AREA. USE OF WATER WILL NOT BE PERMITTED WHEN IT WILL RESULT IN, OR CREATE HAZARDOUS OR OBJECTIONABLE CONDITIONS SUCH AS FLOODING.
5. PROTECTION OF EXISTING BUILDING:
a. EXISTING BUILDING SHALL BE PROTECTED FROM DAMAGE. ANY PART DAMAGED BY THE CONTRACTOR SHALL BE REPAIRED TO MATCH EXISTING CONDITIONS AT CONTRACTOR'S EXPENSE.
b. COVER ITEMS AS NECESSARY TO PROTECT FROM DUST.
c. AT END OF EACH WORK DAY, CLOSE OFF AREAS FROM PUBLIC.
d. DEMOLITION CONTRACTOR SHALL PROVIDE AND MAINTAIN NECESSARY BARRICADES TO PREVENT SPILLAGE ON ANY UNAUTHORIZED PERSONS FROM ACCIDENTALLY OR INTENTIONALLY ENTERING THE WORK AREA.
6. ENVIRONMENTAL PROTECTION: ALL WORK AND CONTRACT OPERATIONS SHALL COMPLY WITH ALL REQUIREMENTS OF STATE AND BROWARD COUNTY ENVIRONMENTAL PROTECTION REGULATIONS.
7. EXPLOSIVE AND BURNING:
a. USE OF EXPLOSIVES WILL NOT BE PERMITTED.
b. USE OF FIRE FOR DEMOLITION OR DISPOSAL OF MATERIAL OR ANY OTHER SITUATION INTENTIONAL OR ACCIDENTAL WILL NOT BE PERMITTED.
8. EXISTING UTILITIES TO BE PROTECTED DURING DEMOLITION 1
a. CONTACT ALL UTILITIES INCLUDING ELECTRIC, WATER, GAS AND TELEPHONE, PRIOR TO BEGINNING WORK AND REQUEST THAT ALL SERVICE BE SHUT OFF AND CAPPED AT PRIMARY SERVICE LINES.
b. REMOVE ALL EXISTING UTILITIES ACCORDING TO SEQUENCE OF OPERATIONS APPROVED AT START OF PROJECT.
c. REMOVE ALL EXISTING UTILITIES UNCOVERED BY DEMOLITION AND TERMINATE IN A MANNER AND AT A TIME SATISFACTORY TO UTILITY COMPANIES INVOLVED. WHERE UTILITY COMPANY DESIRES TO EFFECT THE REMOVAL OF THEIR MATERIALS THEY SHALL BE PERMITTED TO DO SO.
d. REMOVE AND DELIVER METERS AND RELATED EQUIPMENT TO THE APPROPRIATE UTILITY COMPANIES WITHOUT ADDITIONAL COST TO THE OWNER. WHEN UTILITY LINES ARE ENCOUNTERED THAT ARE NOT ON THE DRAWINGS OR VISIBLE THEY SHALL BE DISPOSED OF IN ACCORDANCE WITH INSTRUCTIONS OF THE ARCHITECT/ENGINEER.
e. INSTALL AND LEAVE A WELL MARKED STAKE AT CAPPED END OF EVERY UTILITY CAPPED ON THE SITE.
9. DISPOSING OF MATERIAL:
a. TITLE TO MATERIALS: TITLE TO ALL MATERIAL AND EQUIPMENT TO BE DEMOLISHED AND REMOVED EXCEPT ITEMS INDICATED TO BE TURNED OVER TO THE OWNER IS VESTED IN THE CONTRACTOR AT START OF PROJECT. THE OWNER WILL NOT BE RESPONSIBLE FOR THE CONDITIONS, LOSS, OR DAMAGE TO SUCH PROPERTY AFTER NOTICE TO PROCEED.
b. DEBRIS CONTROL: REMOVE AND TRANSPORT DEBRIS IN LEAK-FREE CONTAINERS IN A MANNER TO PREVENT SPILLAGE ON ANY PART OF EXISTING BUILDING, PARKING LOT AREAS, OR CITY STREETS.
c. REGULATIONS: COMPLY WITH COUNTY, MUNICIPALITY, AND CITY REGULATIONS REGARDING HAULING AND DISPOSAL OF DEBRIS. ALL SUCH MATERIAL SHALL BE DISPOSED OF OFF SITE IN A LEGAL DISPOSAL AREA.
10. PREPARATION:
a. PROVIDE ADEQUATE TEMPORARY SUPPORT AS NECESSARY TO ASSURE STRUCTURAL VALUE OR INTEGRITY OF AFFECTED PORTION OF PROJECT FROM DAMAGE.
b. PROVIDE DEVICES AND METHODS TO PROTECT OTHER PORTIONS OF PROJECT FROM DAMAGE.
c. PROVIDE PROTECTION FROM ELEMENTS FOR THAT PORTION OF THE PROJECT WHICH MAY BE EXPOSED BY CUTTING AND PATCHING WORK.
11. PERFORMANCE:
a. EXECUTE CUTTING AND DEMOLITION BY METHODS WHICH WILL PREVENT DAMAGE TO OTHER WORK, AND WHICH WILL PROVIDE PROPER SURFACES TO RECEIVE INSTALLATION OF REPAIRS.
b. EXECUTE FITTING AND ADJUSTMENT OF PRODUCTS TO PROVIDE A FINISHED INSTALLATION TO COMPLY WITH SPECIFIED PRODUCTS, FUNCTION, TOLERANCE AND FINISHES.
c. RESTORE WORK WHICH HAS BEEN CUT OR REMOVED. INSTALL NEW PRODUCTS TO PROVIDE COMPLETED WORK IN ACCORD WITH REQUIREMENTS THROUGH DOCUMENTS.
d. FIT WORK AIR-TIGHT TO PIPES, SLEEVES, DUCTS, CONDUIT AND OTHER PENETRATIONS THROUGH SURFACES.
e. REFINISH ENTIRE SURFACES AS NECESSARY TO PROVIDE AN EVEN FINISH TO MATCH ADJACENT FINISHES.
f. FOR CONTINUOUS SURFACES, REFINISH TO NEAREST INTERSECTION.
g. FOR AN ASSEMBLY, REFINISH ENTIRE UNIT.
12. CONTRACTOR SHALL VERIFY ALL EXIST'G CONDITIONS PRIOR TO COMMENCING DEMOLITION OR CONSTRUCTION. CONTRACTOR SHALL CONTACT THE STRUCTURAL ENGINEER OF RECORD SHOULD A CONFLICT OCCUR BETWEEN THE EXISTING CONDITIONS AND THOSE CONDITIONS DEPICTED ON THESE PLANS.
13. THE STRUCTURE IS DESIGNED TO BE SELF SUPPORTING & STABLE AFTER THE BUILDING IS COMPLETE. IT IS THE CONTRACTOR'S RESPONSIBILITY TO DETERMINE ERECTION PROCEDURES AND SEQUENCE TO INSURE SAFETY OF THE BUILDING & ITS COMPONENTS DURING ERECTION. THIS INCLUDES THE ADDITION OF NECESSARY SHORING, SHEETING, TEMPORARY BRACING, GUYS OR TIEDOWNS.
14. ALL SAFETY DEVICES SHALL REMAIN OPERABLE DURING DEMOLITION PROCESS.

2 DEMOLITION NOTES

KallerArchitecture
AA# 26001212
2417 Hollywood Blvd.
Hollywood Florida 33020
954.920.5746
joseph@kallerarchitects.com
www.kallerarchitects.com

SEAL

JOSEPH B. KALLER
FLORIDA R.A. # 0009239

PROJECT TITLE
W HALLANDALE SHOPPES
613 -625 W. HALLANDALE BEACH BLVD
HALLANDALE BEACH, FL 33009

SHEET TITLE
DEMOLITION SITE PLAN

REVISIONS

No.	DATE	DESCRIPTION
1	9/21/18	MDR COMMENTS
2	11.14.18	CITY COMMENTS

This drawing, as an instrument of service, is and shall remain the property of the Architect and shall not be reproduced, published or used in any way without the permission of the Architect.

PROJECT No.:	18048
DATE:	08-30-18
DRAWN BY:	GMV / JP
CHECKED BY:	JBK

SHEET
SPD-1

Bidders shall complete sets of Bidding Documents. The Contract Documents is to include all items necessary for the proper execution and completion of the work by the Contractor. The Contract Documents are complementary, and what is required by one shall be as binding as if required by all; performance by the Contractor shall be required only to the extent consistent with the Contract Documents. The errors or inconsistencies resulting from the use of facsimiles or preliminary sets of Building Documents. The Contractor shall notify the Owner and Architect of any such errors or inconsistencies immediately upon discovery.