BID # FY 2017-2018-017

EXHIBIT A

TECHNICAL SPECIFICATIONS

WATER TREATMENT PLANT HIGH SERVICE PUMP REPLACEMENT

Hallandale Beach

PROGRESS. INNOVATION. OPPORTUNITY.

Department of Public Works
Utilities Division
630 NW 2nd Street
Hallandale Beach, FL 33009

Bid Set

August 21, 2018

Engineering Index Sheet for Specifications[1]
General, Civil and Mechanical

Project Name:	City of Hallandale Beach Water Treatment Plant High Service Pump Replacement
Project Address:	630 NW 2nd Street Hallandale Beach, FL 33009
Person in Responsible Charge:	George A. Brown, PE Florida PE No. 56076 4000 Hollywood Blvd., Suite No. 750N Hollywood, Florida 33021
Specification Responsibility:	Divisions 1 Division 2 Division 11 Specifications 15000 through 15390 and 15995
Duly Authorized Engineering Business:	Hazen and Sawyer 4000 Hollywood Blvd., Suite No. 750N Hollywood, Florida 33021 Certificate of Authorization No.: 2771
Florida Building Code Compliance:	6th Edition (2017) Florida Building Code, Plumbing
Software Used in Specification Development:	Microsoft Word
Sign, Date and Seal:	GEORGE A. BROWN LICENSE No 56076 STATE OF FLORIDA PROFESSIONAL ENGINEER 8/20/18 George A. Brown, PE No. 56076

[1] This sheet complies with the requirements of Florida Administrative Code 61G15-23.001(4)(b).

Engineering Index Sheet for Specifications[1]
Structural and Architectural

Project Name:	City of Hallandale Beach Water Treatment Plant High Service Pump Replacement
Project Address:	630 NW 2nd Street Hallandale Beach, FL 33009
Person in Responsible Charge:	Shajan Joykutty, PE Florida PE No. 43323 4000 Hollywood Blvd., Suite No. 750N Hollywood, Florida 33021
Specification Responsibility:	Division 3 Division 4 Division 5 Division 7 Division 8 Division 10
Duly Authorized Engineering Business:	Hazen and Sawyer, PC 4000 Hollywood Blvd., Suite No. 750N Hollywood, Florida 33021 Certificate of Authorization No.: 2771
Florida Building Code Compliance:	6th Edition (2017) Florida Building Code, Building 6th Edition (2017) Florida Building Code, Existing Building 6th Edition (2017) Florida Fire Prevention Code
Software Used in Specification Development:	Microsoft Word
Sign, Date and Seal:	8/20/18 Shajan Joykutty, PE No. 43323

[1] This sheet complies with the requirements of Florida Administrative Code 61G15-23.001(4)(b).

Engineering Index Sheet for Specifications[1]
Electrical

Project Name:	City of Hallandale Beach Water Treatment Plant High Service Pump Replacement
Project Address:	630 NW 2nd Street Hallandale Beach, FL 33009
Person in Responsible Charge:	J. Brad Pickett, PE Florida PE No. 74106 4011 WestChase Boulevard Raleigh, NC 27607
Specification Responsibility:	Division 16
Duly Authorized Engineering Business:	Hazen and Sawyer 4000 Hollywood Blvd., Suite No. 750N Hollywood, Florida 33021 Certificate of Authorization No.: 2771
Florida Building Code Compliance:	6th Edition (2017) Florida Building Code, Building 6th Edition (2017) Florida Building Code, Existing Building
Software Used in Specification Development:	Microsoft Word
Sign, Date and Seal:	JOSEPH B. PICKETT LICENSE No. 74106 STATE OF FLORIDA PROFESSIONAL ENGINEER 8/7/18 J. Brad Pickett, PE No. 74106

[1] This sheet complies with the requirements of Florida Administrative Code 61G15-23.001(4)(b).

Engineering Index Sheet for Specifications[1]
Instrumentation / Controls

Project Name:	City of Hallandale Beach Water Treatment Plant High Service Pump Replacement
Project Address:	630 NW 2nd Street Hallandale Beach, FL 33009
Person in Responsible Charge:	Keith R. Dinnen, PE Florida PE No. 78757 4000 Hollywood Blvd., Suite No. 750N Hollywood, Florida 33021
Specification Responsibility:	Division 17
Duly Authorized Engineering Business:	Hazen and Sawyer, PC 4000 Hollywood Blvd., Suite No. 750N Hollywood, Florida 33021 Certificate of Authorization No.: 2771
Florida Building Code Compliance:	Not Applicable
Software Used in Specification Development:	Microsoft Word
Sign, Date and Seal:	KEITH R. DINNEN LICENSE 08/07/2018 No. 78757 STATE OF FLORIDA PROFESSIONAL ENGINEER Keith R. Dinnen, PE No. 78757

[1] This sheet complies with the requirements of Florida Administrative Code 61G15-23.001(4)(b).

Engineering Index Sheet for Specifications[1]
Ventilation and Air Conditioning

Project Name:	City of Hallandale Beach Water Treatment Plant High Service Pump Replacement
Project Address:	630 NW 2nd Street Hallandale Beach, FL 33009
Person in Responsible Charge:	Norman Bartley, PE Florida PE No. 82112 498 Seventh Avenue New York, NY 10018
Specification Responsibility:	Specifications 15500 through 15738
Duly Authorized Engineering Business:	Hazen and Sawyer 4000 Hollywood Blvd., Suite No. 750N Hollywood, Florida 33021 Certificate of Authorization No.: 2771
Florida Building Code Compliance:	6th Edition (2017) Florida Building Code, Building 6th Edition (2017) Florida Building Code, Existing Building
Software Used in Specification Development:	Microsoft Word
Sign, Date and Seal:	NORMAN E BARTLEY LICENSE No 82112 STATE OF 8-10-18 FLORIDA PROFESSIONAL ENGINEER Norman Bartley, PE No. 82112

[1] This sheet complies with the requirements of Florida Administrative Code 61G15-23.001(4)(b).

BID PROPOSAL FORM

CITY OF HALLANDALE BEACH
WATER TREATMENT PLANT
HIGH SERVICE PUMP REPLACEMENT

TO THE COMMISSION OF THE CITY OF
HALLANDALE BEACH, FLORIDA

Ladies and Gentlemen:

The undersigned bidder proposes to furnish all labor, tools, material and supplies, and to sustain all the expense incurred in doing the work set forth below that may be awarded the undersigned by the City of Hallandale Beach, Florida, through its proper officers, and to do the same strictly in accordance with the plans and contract documents on file in the Office of the City Engineer of Hallandale Beach, which are referred to below and made a part hereof, at the following combination of lump sum prices:

BASE BID

Item No.	Estimated Quantity	Description	Total
1	Lump Sum	Mobilization and demobilization for the lump sum price of: _____ _____Dollars and _____Cents	$_____
	NOTE:	The total for Bid Item No. 1 shall not exceed 5 percent of the total base bid price.	
2	Lump Sum	Consideration for Indemnification for the lump sum price of: Twenty-Five - Dollars and No- Cents	$ 25.00
3	Allowance	Permit Fees Allowance of: One-Hundred Thousand - Dollars and No- Cents	$100,000.00

BID PROPOSAL FORM

CITY OF HALLANDALE BEACH
WATER TREATMENT PLANT
HIGH SERVICE PUMP REPLACEMENT

Item No.	Estimated Quantity	Description	Total
4	Allowance	Special Inspector Allowance of: Ten Thousand - - - - - - - - - - - - - - - Dollars and No- Cents	$10,000.00
5	Allowance	Undefined Conditions Allowance of: One Hundred Thousand - - - - - - - - - - - - - - - Dollars and No- Cents	$100,000.00
6	Lump Sum	Roofing Replacement as described in the Contract Documents, for the lump sum price of: _____ _____Dollars and _____Cents	$_____
7	Lump Sum	Temporary High Service Pumps, Temporary Pipes and Temporary Electrical, for the lump sum price of: _____ _____Dollars and _____Cents	$_____
8	Lump Sum	All Other Work described in the Contract Documents, for the lump sum price of: _____ _____Dollars and _____Cents	$_____

BID PROPOSAL FORM

CITY OF HALLANDALE BEACH
WATER TREATMENT PLANT
HIGH SERVICE PUMP REPLACEMENT

The City of Hallandale Beach reserves the right to waive any informality in any bid and to reject any or all bids.

TOTAL BASE BID PRICE FOR PROPOSAL (ITEMS 1 THROUGH 8): $_____
(FIGURES)

_____Dollars and

_____Cents

AMOUNTS SHALL BE SHOWN ON BOTH WORDS AND FIGURES. IN CASE OF DISCREPANCIES, THE AMOUNT SHOWN IN WORDS SHALL GOVERN FOR EACH BID ITEM AND TOTAL BASE BID.

Bidder acknowledges that included in the various items of the bid proposal and in the TOTAL BASE BID PRICE are costs for complying with the Florida Trench Safety Act, F.S. 553.60 et. seq. The Bidder by signing and submitting the Trench Safety Act Compliance Statement is, in writing, assuring that it will perform any trench excavation in accordance with applicable trench safety standards.

Contract award shall be based upon the total base bid price, as identified above, by the lowest responsive, responsible bidder.

_____ _____
FIRM NAME (PRINT) BIDDER'S SIGNATURE

TABLE OF CONTENTS

CITY OF HALLANDALE BEACH, FLORIDA

WATER TREATMENT PLANT

HIGH SERVICE PUMPS

CITY GENERAL CONDITIONS

SUPPLEMENTAL CONDITIONS

TECHNICAL SPECIFICATIONS

SECTION	**TITLE**
DIVISION 1 -	**GENERAL REQUIREMENTS**
01010	SUMMARY OF WORK
01011	SPECIAL INSPECTIONS
01015	WATER FILLED BARRICADES
01025	MEASUREMENT AND PAYMENT
01070	ABBREVIATIONS
01090	REFERENCE STANDARDS
01200	PROJECT MEETINGS
01300	SUBMITTALS
01400	QUALITY CONTROL
01510	TEMPORARY UTILITIES
01520	MAINTENANCE OF UTILITY OPERATIONS DURING CONSTRUCTION
01530	PROTECTION OF EXISTING FACILITIES
01532	WELLFIELD PROTECTION
01535	EMERGENCY RESPONSE PLANNING
01540	DEMOLITION AND REMOVAL OF EXISTING STRUCTURES AND EQUIPMENT
01550	SITE ACCESS AND STORAGE
01560	TEMPORARY ENVIRONMENTAL CONTROLS
01590	FIELD OFFICE, EQUIPMENT AND SERVICES
01600	MATERIALS AND EQUIPMENT
01660	EQUIPMENT TESTING AND STARTUP

01700 PROJECT CLOSEOUT

DIVISION 2 - SITE WORK

02100 TEMPORARY EROSION AND SEDIMENTATION CONTROL
02210 SITE GRADING
02222 EXCAVATION AND BACKFILL FOR UTILITIES
02224 EXCAVATION AND BACKFILL FOR STRUCTURES
02260 FINISH GRADING
02500 SURFACE RESTORATION
02510 ASPHALTIC CONCRETE PAVEMENT
02526 CONCRETE PAVEMENT, CURB AND WALKWAYS
02934 SODDING

DIVISION 3 - CONCRETE

03305 CONCRETE AND GROUT
03480 PRECAST CONCRETE MANHOLES, HANDHOLES AND VAULTS

DIVISION 4 – MASONRY

04100 MORTAR AND MASONRY GROUT
04150 MASONRY ACCESSORIES
04200 UNIT MASONRY

DIVISION 5 - METALS

05010 METAL MATERIALS
05050 METAL FASTENING
05120 STRUCTURAL STEEL
05500 METAL FABRICATIONS
05531 GRATINGS, FLOOR PLATES, AND ACCESS HATCHES
05540 CASTINGS

DIVISION 6 - WOOD AND PLASTICS (NOT USED)

DIVISION 7 – THERMAL AND MOISTURE PROTECTION

07270 FIRESTOPPING
07510 BUILT-UP BITUMINOUS ROOFING
07600 FLASHING AND ROOFING ACCESSORIES

07900 JOINT FILLERS, SEALANTS AND CAULKING

DIVISION 8 – DOORS AND WINDOWS

08110 STEEL DOORS AND FRAMES

08710 FINISH HARDWARE

DIVISION 9 – FINISHES

09210 STUCCO

09805 REMOVAL OF LEAD-CONTAINING PAINT

09900 PAINTING

DIVISION 10 – SPECIALTIES

10200 ALUMINUM LOUVERS

DIVISION 11 - EQUIPMENT

11000 EQUIPMENT GENERAL PROVISIONS

11001 TEMPORARY BYPASS PUMPING

11100 PUMPS, GENERAL

11200 HORIZONTAL SPLIT CASE PUMPS

11208 SUMP PUMPS

DIVISION 12 - FURNISHINGS (NOT USED)

DIVISION 13 – SPECIAL CONSTRUCTION (NOT USED)

DIVISION 14 – CONVEYING SYSTEMS (NOT USED)

DIVISION 15 – MECHANICAL

15000 BASIC MECHANICAL REQUIREMENTS

15006 DUCTILE IRON PIPE

15013 STAINLESS STEEL TUBING

15014 COPPER TUBING

15020 PIPE SUPPORTS

15030 PIPING AND EQUIPMENT IDENTIFICATION SYSTEMS

15060 PVC/CPVC PIPE AND FITTINGS

15095 VALVES, GENERAL

15100 VALVE OPERATORS AND ELECTRIC VALVE ACTUATORS

15105 CHECK VALVES
15106 BALL VALVES
15108 GATE VALVES
15114 MISCELLANEOUS VALVES AND APPURTENANCES
15170 LOW VOLTAGE ELECTRIC MOTORS
15390 SCHEDULES
15500 BASIC HVAC REQUIREMENTS
15590 FANS
15598 METALLIC DUCTWORK & DUCT ACCESSORIES
15599 HVAC INSULATION
15616 HVAC TESTING, ADJUSTING, AND BALANCING
15738 UNITARY DIRECT EXPANSION SPLIT SYSTEMS
15995 PIPELINE TESTING AND DISINFECTION

DIVISION 16 - ELECTRICAL

16000 BASIC ELECTRICAL REQUIREMENTS
16055 POWER SYSTEM STUDIES
16111 CONDUIT
16118 UNDERGROUND ELECTRICAL
16123 LOW VOLTAGE WIRE AND CABLE
16130 BOXES
16141 WIRING DEVICES
16170 GROUNDING AND BONDING
16190 SUPPORTING DEVICES
16195 ELECTRICAL - IDENTIFICATION
16426 LOW VOLTAGE SWITCHBOARDS
16428 LOW VOLTAGE SWITCHGEAR
16440 DISCONNECT SWITCHES
16461 DRY TYPE DISTRIBUTION TRANSFORMERS
16470 PANELBOARDS
16495 VARIABLE FREQUENCY DRIVE SYSTEMS
16500 LIGHTING
16670 LIGHTNING PROTECTION SYSTEM
16902 ELECTRIC CONTROLS AND RELAYS

DIVISION 17 - INSTRUMENTATION

17000 CONTROL AND INFORMATION SYSTEM SCOPE AND GENERAL REQUIREMENTS
17030 CONTROL AND INFORMATION SYSTEM SUBMITTALS
17040 CONTROL AND INFORMATION SYSTEM TRAINING REQUIREMENTS
17060 SIGNAL COORDINATION REQUIREMENTS
17070 CONTROL AND INFORMATION SYSTEM TESTING – GENERAL
17071 FACTORY ACCEPTANCE TEST
17072 FIELD TESTING
17073 FINAL ACCEPTANCE TEST
17080 QUALITY ASSURANCE
17100 CONTROL AND INFORMATION SYSTEM HARDWARE- GENERAL
17120 PROGRAMMABLE LOGIC CONTROLLERS
17125 PLC OPERATOR INTERFACE UNITS
17185 ETHERNET NETWORK
17240 SCADA SYSTEM SOFTWARE SUITE
17300 MISCELLANEOUS MODIFICATIONS
17500 ENCLOSURES - GENERAL
17510 CABINETS AND PANELS
17550 PANEL INSTRUMENTS AND ACCESSORIES
17560 SURGE PROTECTION DEVICES
17600 UNPOWERED INSTRUMENTS – GENERAL
17650 PRESSURE GAUGES
17675 PRESSURE SWITCHES
17698 INSTRUMENTATION AND CONTROL SYSTEM ACCESSORIES
17700 POWERED INSTRUMENTS, GENERAL
17701 MAGNETIC FLOW METERS
17760 PRESSURE INDICATING TRANSMITTERS
17800 ANALYTICAL INSTRUMENTS, GENERAL
17832 MULTIPARAMETER ANALYZERS
17910 INSTRUMENT SCHEDULE
TABLE 17910 - INSTRUMENT SCHEDULE
17920 CONTROL SYSTEM INPUT/OUTPUT SCHEDULES
TABLE 17920 - INPUT/OUTPUT SCHEDULE
TABLE 17921 - DIGITAL INPUT/OUTPUT SCHEDULE

17950 FUNCTIONAL CONTROL DESCRIPTIONS

ATTACHMENTS

Attachment A Lead Paint Survey Report

Attachment B Asbestos Pre-Renovation Survey

Attachment C 1967 Water Plant Record Drawings

Attachment D 1977 Yard Piping Drawings

Attachment E 2008 Water Plant Record Drawings

Attachment F Broward County Health Department Construction Permit

SECTION 01010 - SUMMARY OF WORK

PART 1 -- GENERAL

1.01 THE REQUIREMENT

A. The work to be performed under this Contract shall consist of furnishing of all tools, equipment, materials, supplies, manufactured articles, transportation and services, including fuel, power, water, and essential communications, for the performance of all labor, work, testing and/or other operations as required for the fulfillment of the Contract in strict accordance with the Contract Documents. The work shall be complete, and all work, materials, and services not expressly shown or called for in the Contract Documents which may be necessary for the complete and proper execution of the contract in good faith shall be performed, furnished, and/or provided by the CONTRACTOR as though originally so specified or shown, at no increase in cost to the OWNER.

B. The work is at the City of Hallandale Beach Water Treatment Plant, located at:

630 NW 2nd St
Hallandale Beach, FL 33009

C. Wherever the Contract Documents address a third party, i.e., subcontractor, manufacturer, etc., it is to be considered as the CONTRACTOR through the third party.

D. Wherever a reference to number of days is noted, it shall be construed to mean calendar days.

E. The CONTRACTOR is advised that the work is to be performed in a fully operational water treatment facility, which is the principal source of potable water supply for the City of Hallandale Beach. Activities include work on electrical systems that control equipment active in the treatment process. The CONTRACTOR shall be fully responsible for all precautionary measures together with all remediation, cleanup, disinfection, regulatory agency fines and all other labor, materials, and costs associated with any contamination of the potable water supply or interruption of water treatment caused directly or indirectly by the activities of the CONTRACTOR in the performance of the work.

F. Notwithstanding other indemnification requirements of the Contract Documents, the CONTRACTOR shall also indemnify, defend, and hold harmless the OWNER, the ENGINEER and the OWNER's agents from any and all legal action which may arise from contamination of the potable water supply or interruption of water treatment caused directly or indirectly by the CONTRACTOR in the performance of the work.

1.02 WORK COVERED BY CONTRACT DOCUMENTS

A. The work to be performed includes all site, civil, mechanical, structural, architectural, electrical, instrumentation and all related work associated with the following:

1. High Service Pump Station: This work consists of removal of five existing water pumps and associated piping, valves, electrical, and structural components as

required for a complete and operable project. Additionally, this work includes procurement, installation, testing and startup of four new horizontal split case water pumps along with all associated piping, valves, controls, electrical, structural, architectural, mechanical, civil, HVAC, and any other improvements required for a complete and operable system.

2. Temporary Power to Existing High Service Pumps and MCC-2: The Contractor shall be fully responsible for the design, permitting, procurement, installation, testing, startup and operation of a temporary electrical system to allow removal of Lime Softening Plant MCC-1 (located in the High Service Pump Station) while maintaining power to the existing high service pumps and the equipment connected to Lime Softening Plant MCC-2 (located in the Lime Softening Plant Control Room) and any other improvements required for a complete and operable system as described in the Contract Documents. The Contractor shall remove the temporary electrical system and all its associated piping, valves, controls, etc. and restore the site following acceptance of the permanent high service pump station by the Owner.

3. Temporary High Service Pump Station: A temporary high service pump station with automatic controls is required to facilitate removal and replacement of the existing high service pumps. The Contractor shall be responsible for the design, permitting, procurement, installation, testing, startup and operation of the temporary high service pump station along with all necessary temporary piping, valves, electrical, controls, civil and any other improvements required for a complete and operable system as described in the Contract Documents. The Contractor shall remove the temporary high service pump station and all its associated piping, valves, controls, etc. and restore the site following acceptance of the permanent high service pump station by the Owner.

4. Electrical Improvements: This work consists of the procurement, installation, testing, and startup of new switchgear at the Generator Building, along with new switchboard and variable frequency drives at the high service pump station to provide power to the new high service pumps. The Contractor can use the new switchgear at the Generator Building as part of its temporary electrical design. Electricity supplied by the OWNER to energize the temporary electrical system to operate the existing, proposed and temporary high service pumps will be paid for by the OWNER.

B. It Is the intent of the OWNER to obtain a complete and working installation under this contract and any items of labor, materials, or equipment, which reasonably be assumed as necessary to accomplish this end, should be supplied whether or not specifically shown on the plans or described herein. Maintenance of existing operations is mandated throughout the construction period.

1.03 WORK BY OTHERS

A. The CONTRACTOR's attention is directed to the fact that other contractors will conduct other work at the site(s) during the performance of the work under this Contract. The CONTRACTOR shall conduct its operations so as to cause a minimum of interference

with the work of such other contractors, and shall cooperate fully with such contractors to provide continued safe access to their respective portions of the site, as required to perform their respective contracts.

B. When two or more contracts are being executed at one time on the same or adjacent areas in such manner that work on one contract may interfere with that on another, the OWNER shall determine the sequence and order of the work. When the territory of one contract is the necessary or convenient means of access for the execution of another contract, such privilege of access or any other reasonable privilege may be granted by the OWNER to the CONTRACTOR so desiring, to the extent, amount, in the manner, and at the times permitted. No such decision as to the method or time of conducting the work or the use or territory shall be made the basis of any claim of delay or damage.

C. Interference with Work on Utilities: The CONTRACTOR shall cooperate fully with all utility forces of the OWNER or forces of other public or private agencies engaged in the relocation, altering, or otherwise rearranging of any facilities which interfere with the progress of the work, and shall schedule the work so as to minimize interference with said relocation, altering, or other rearranging of facilities.

1.04 CONTRACTOR FURNISHED MATERIALS AND/OR EQUIPMENT

A. All equipment, materials, or devices incorporated into this project shall be new and unused, unless indicated otherwise on the Contract Documents and shall be the products of reliable manufacturers who, unless otherwise specified, have been regularly engaged in the manufacture of such material and equipment for at least five (5) years.

1.05 CONTRACTOR USE OF PROJECT SITE

A. Staging Plan: The CONTRACTOR's use of the project site shall be limited to its construction operations, including on-site storage of materials, on-site fabrication facilities, and field offices, as noted on the “Staging Plan” in the Contract Drawings.

B. The CONTRACTOR shall confine his operations within the Contract limits shown on the Drawings and/or property lines and/or fence lines. Storage of equipment and materials, or erection and use of sheds outside of the Contract limits, if such areas are the property of the OWNER, shall be used only with the OWNER's approval. Such storage or temporary structures, even within the Contract's limits, shall be confined to the OWNER's property and shall not be placed on properties designated as easements or rights-of-way unless specifically permitted elsewhere in the Contract Documents.

1.06 OWNER USE OF THE PROJECT SITE

A. The OWNER may utilize all or part of the facilities during the entire period of construction for the conduct of the OWNER’s normal operations. The CONTRACTOR shall cooperate with the OWNER to minimize interference with the CONTRACTOR's operations and to facilitate the OWNER's operations.

1.07 PERMITS

A. All permit application fees for CONTRACTOR obtained permits will be paid for by the OWNER. Payment for permit fees will be based upon the actual permit fees required by

the CONTRACTOR from the various agencies having jurisdiction for construction of the project, in accordance with the Contract Documents. The CONTRACTOR shall produce documentation verifying the actual cost of permit application fees. Only permit application fees substantiated by the CONTRACTOR and approved by the ENGINEER will be paid by the OWNER.

B. It shall be the CONTRACTOR's responsibility to secure all permits of every description required to initiate and complete the work under this contract, except permits obtained by the OWNER.

C. Permits that have been (or will be) obtained by the OWNER or its authorized representative (copies are available to the CONTRACTOR upon request), include the following:

1. Public Drinking Water Facility Construction Permit from the Broward County Health Department.

2. Project approvals from the Broward County Environmental Protection and Growth Management.

1.08 FIELD ENGINEERING

A. Yard piping 2-inches in diameter and smaller that is shown on the yard piping drawings shall be field routed with the assistance of the ENGINEER and OWNER.

1.09 SITE CONDITIONS

A. The CONTRACTOR acknowledges that it has investigated prior to bidding and satisfied itself as to the conditions affecting the work, including but not restricted to those bearing upon transportation, disposal, handling and storage of materials, availability of labor, water, electric power, roads and uncertainties of weather, river stages, tides, water tables or similar physical conditions at the site, the conformation and conditions of the ground, the character of equipment and facilities needed preliminary to and during prosecution of the work. The CONTRACTOR further acknowledges that it has satisfied itself as to the character, quality and quantity of surface and subsurface materials or obstacles to be encountered insofar as this information is reasonably ascertainable from an inspection of the site, or any contiguous site, as well as from information presented by the Drawings and Specifications made a part of this Contract, or any other information made available to it prior to receipt of Bids. Any failure by the CONTRACTOR to acquaint itself with the available information will not relieve it from responsibility for estimating properly the difficulty or cost of successfully performing the work. The OWNER assumes no responsibility for any conclusions or interpretations made by the CONTRACTOR on the basis of the information made available by the OWNER.

1.10 DIMENSIONS OF EXISTING FACILITIES

A. Where the dimensions and locations of existing improvements are of critical importance in the installation or connection of new work, the CONTRACTOR shall verify such dimensions and locations in the field prior to the fabrication and/or installation of materials or equipment, which are dependent on the correctness of such information.

1.11 UTILITY LOCATIONS

A. To the extent possible, existing utility lines in the project area have been shown as represented on the available record drawings and surveys referenced earlier. However, neither the Owner and/or Engineer guarantee that all lines are shown, or that said lines are in their true location. It shall be the Contractor's responsibility to identify and locate all underground or overhead utility lines or equipment affected by the project. No additional payment will be made to the Contractor because of discrepancies in actual and plan location of utilities and damages suffered as a result thereof of lines shown on the plans.

B. All overhead, surface or underground structures and/or utilities encountered are to be carefully protected from damage or displacement. All damage to said structures and/or utilities is to be completely repaired within a reasonable time; needless delay will not be tolerated. The OWNER reserves the right to remedy any damage by ordering outside parties to make repairs at the expense of the Contractor. All repairs made by the Contractor are to be made to the satisfaction of the OWNER and shall be inspected by a representative of the OWNER.

C. The Contractor shall arrange for positive underground location, relocation or support of utilities where they may be in conflict with or endangered by the proposed Work.

D. Relocations of existing utilities for the convenience of the Contractor shall be at Contractor expense.

1.12 DIFFERING BELOW GRADE SITE CONDITIONS – NOTIFICATION TO OWNER

A. The Contractor shall promptly and before such below grade conditions are disturbed, notify the Owner in writing <u>within three days (3)</u> of: (1) subsurface conditions at the site differing materially from those indicated on the drawings, or (2) unknown below grade physical conditions at the site, of an unusual nature, differing materially from those ordinarily encountered and generally recognized as inherent in Work of the character provided for this contract.

B. The Owner will promptly investigate and if it finds that such below grade conditions do materially so differ and cause an increase or decrease in the Contractor's cost of, or the time required for, performance of any part of the Work under this contract, whether or not changed as a result of such conditions, an equitable adjustment shall be made and the contract modified in writing accordingly.

C. No claim of the Contractor under this clause shall be allowed unless the Contractor has given proper written notice to the Owner as required above.

D. No claim by the Contractor for an equitable adjustment hereunder shall be allowed if asserted after final payment under this contract.

1.13 ADJUSTING EXISTING VALVES, METERS, CATCH BASINS AND MANHOLES

A. The Contractor shall responsibility coordinate and make all adjustments to existing meters, valves, catch basins and structures otherwise encountered during construction and proposed to remain, to meet all final grades, unless otherwise instructed by the Engineer and/or the respective utility Owner.

B. As aged record drawings were used in the development of the contract documents, omission or lack of clarity identifying such structures on the drawings does NOT relieve the Contractor from making any and all adjustments as may be deemed necessary. The Contractor shall visit the site prior to bid, thoroughly familiarize itself with all such visible improvements, and include costs to comply with this requirement in its base bid. All costs related to this Work shall be considered included in the Contractor's base bid.

1.14 SURVEYS AND LAYOUT

A. All work under this Contract shall be constructed in accordance with the lines and grades shown on the Drawings or as directed by the ENGINEER. Elevation of existing ground and appurtenances are believed to be reasonably correct but are not guaranteed to be absolute and therefore are presented only as an approximation. Any error or apparent discrepancy in the data shown or omissions of data required for accurately accomplishing the stake out survey shall be referred immediately to the ENGINEER for interpretation or correction.

B. The Contractor shall verify existing utility and structure locations and elevations sufficiently ahead of the Work to allow time for any necessary adjustments without delay to the progress of the installation. Costs due to delays occasioned by locations and/or elevations differing from those shown on the Drawings which could have or should have been discovered by timely verification ahead of the Work shall rest solely with the Contractor. No request for additional compensation or Contract time (except for a non-compensable time extension at the sole discretion of the Engineer, whose decision shall be final) resulting from encountering interfering installations not shown, or existing installations differing in location or elevation from that shown, will be considered.

C. The survey shall be performed by a Professional Land Surveyor in the State of Florida and shall meet the minimum technical standards identified in Chapter 61G17-6, FAC.

D. Elevations: All elevations shown on the contract drawings of the facility are in National Geodetic Vertical Datum (NGVD) of 1929.

E. Existing Plant Benchmark: All elevations shall be based off of the existing benchmark elevation(s) shown on the Drawings; these benchmarks in are NGVD 1929.

F. Horizontal Locations: State Plane Coordinates shall be based on NAD 1983/90.

G. All survey work for construction control purposes shall be made by the CONTRACTOR at his expense. The CONTRACTOR shall provide a Licensed Surveyor as Chief of Party, competently qualified men, all necessary instruments, stakes, and other material to perform the work.

H. CONTRACTOR shall establish all baselines for the location of the principal component parts of the work together with a suitable number of bench marks and batter boards adjacent to the work. Based upon the information provided by the Contract Drawings, the CONTRACTOR shall develop and make all detail surveys necessary for construction, including slope stakes, batter boards, stakes for all working points, lines and elevations.

I. CONTRACTOR shall have the responsibility to carefully preserve the bench marks, reference points and stakes, and in the case of destruction thereof by the CONTRACTOR

or resulting from his negligence, the CONTRACTOR shall be charged with the expense and damage resulting therefrom and shall be responsible for any mistakes that may be caused by the unnecessary loss or disturbance of such bench marks, reference points and stakes.

J. Existing or new control points, property markers and monuments that will be or are destroyed during the normal causes of construction shall be reestablished by the CONTRACTOR and all reference ties recorded therefore shall be furnished to the ENGINEER. All computations necessary to establish the exact position of the work shall be made and preserved by the CONTRACTOR.

K. The ENGINEER may check all or any portion of the work and the CONTRACTOR shall afford all necessary assistance to the ENGINEER in carrying out such checks. Any necessary corrections to the work shall be immediately made by the CONTRACTOR. Such checking by the ENGINEER shall not relieve the CONTRACTOR of any responsibilities for the accuracy or completeness of his work.

L. At completion of the work, the CONTRACTOR shall furnish Record Drawings indicating the final layout of all piping, electrical duct banks, roads, all structures, existing bench marks, etc. The Record Drawings shall indicate all critical elevations of piping, structures, finish grades, etc.

M. Submit record drawings in accordance with the requirements of Section 01300 and as herein specified.

N. The OWNER shall provide the Contractor with three sets of 22” x 34” contract drawings for the sole purposes of preparing red line markups for submittal as record drawings.

O. Red Line Markups: Submit two sets of 22” x 34” contract drawings neatly marked-up showing all changes form the original drawings as bid, including all Change Orders, alignment changes, depth changes of underground pipes and utilities, all other items that are not the same as they were originally shown. In addition, disciplines (i.e., electrical, instrumentation, mechanical, civil, structural, plumbing, HVAC, irrigation, landscaping, etc.) contract drawings shall be marked-up showing all changes. Furthermore, the markups shall illustrate existing features, such as existing underground utilities, that were not shown on the as bid contract drawings.

P. Clearly and legibly marking the sets of record drawings is a priority. The Engineer shall review the submitted record drawings for clarity, legibility and that the markups accurately reflect the authorized changes. The Engineer will reject the record drawing submittal if, in the Engineer’s opinion the markups are not sufficiently clear, legible and accurate.

1.15 MAINTENANCE OF RECORD DOCUMENTS

A. General:

1. Promptly following initiation of the project, secure from the OWNER at no cost to CONTRACTOR, three complete sets of Contract Documents. Drawings will be full size (22” x 34”).

2. Delete ENGINEER title block and seal from all documents.

3. Label or stamp each record document with title, “RECORD DOCUMENTS,” in neat large printed letters.

4. Record information concurrently with construction progress and within 24 hours after receipt of information that change has occurred. Do not cover or conceal Work until required information is recorded. CONTRACTOR is responsible for providing “red-lined” markups of all changes including revised locations of buried features.

5. All underground piping inserts, fittings, piping at 20-foot intervals, and valve locations shall be located by the CONTRACTOR’s surveyor per North American Datum NAD 83/90.

B. Preservation:

1. Maintain documents in a clean, dry, legible condition and in good order. Do not use record documents for construction purposes.

2. Make documents available at all times for observation by PCM or ENGINEER.

C. Making Entries on Drawings:

1. Using an erasable colored pencil (not ink or indelible pencil), clearly describe change by graphic line and note as required.

a. Color Coding:

1) Green when showing information deleted from Drawings.

2) Red when showing information added to Drawings.

3) Blue and circled in blue to show notes.

2. Date entries.

3. Call attention to entry by “cloud” drawn around area or areas affected.

4. Legibly mark to record actual changes made during construction, including, but not limited to:

a. Depths of various elements of foundation in relation to finished first floor data if not shown or where depth differs from that shown.

b. Horizontal and vertical locations of existing and new Underground Facilities and appurtenances, and other underground structures, equipment, or Work. Reference to at least two measurements to permanent surface improvements.

c. Location of internal utilities and appurtenances concealed in the construction referenced to visible and accessible features of the structure.

d. Locate existing facilities, piping, equipment, and items critical to the interface between existing physical conditions or construction and new construction.

e. Changes made by Addenda and Field Orders, Work Change Directive, Change Order, Written Amendment, and ENGINEER's written interpretation and clarification using consistent symbols for each and showing appropriate document tracking number.

5. Dimensions on Schematic Layouts: Show on record drawings, by dimension, the centerline of each run of items such as are described in previous subparagraph above.

a. Clearly identify the item by accurate note such as “cast iron drain,” “galv. water,” and the like.

b. Show, by symbol or note, vertical location of item (“under slab,” “in ceiling plenum,” “exposed,” and the like).

c. Make identification so descriptive that it may be related reliably to Specifications.

D. Coordination with Contractor’s Surveyor:

1. CONTRACTOR shall not cover any bends, valves, or fittings installed until they have been located by the Contractor’s survey crews for the purpose of preparing Record Drawings. In the event that traffic or safety conditions require that the trench be backfilled prior to location, the CONTRACTOR shall, under the direct supervision of the City Inspector onsite, provide and maintain a minimum of two aboveground physical reference points with distances to the fittings in question. Said reference points shall be maintained for a minimum of 48 hours after backfilling.

2. If the above conditions are not met, for any reason, CONTRACTOR shall bear the cost of potholing the constructed installation to allow for the locations.

1.16 FIRE PROTECTION

A. CONTRACTOR shall take all necessary precautions to prevent fires at or adjacent to the work, buildings, etc., and shall provide adequate facilities for extinguishing fires which do occur.

B. When fire or explosion hazards are created in the vicinity of the work as a result of the locations of fuel tanks, or similar hazardous utilities or devices, the CONTRACTOR shall immediately alert the local Fire Marshal, the ENGINEER, and the OWNER of such tank or device. The CONTRACTOR shall exercise all safety precautions and shall comply with all instructions issued by the Fire Marshal and shall cooperate with the OWNER of the tank or device to prevent the occurrence of fire or explosion.

1.17 CHEMICALS

A. All chemicals used during project construction or furnished for project operation, whether herbicide, pesticide, disinfectant, polymer, or reactant of other classification, must show approval of either the EPA or USDA. Use of all such chemicals and disposal of residues shall be in strict conformance with all applicable rules and regulations.

1.18 FIRST AID FACILITIES AND ACCIDENTS

A. First Aid Facilities: The CONTRACTOR shall provide at the site such equipment and facilities as are necessary to supply first aid to any of his personnel who may be injured in connection with the work.

B. Accidents:

1. The CONTRACTOR shall promptly report, in writing, to the ENGINEER and OWNER all accidents whatsoever out of, or in connection with, the performance of the work, whether on or adjacent to the site, which cause death, personal injury or property damage, giving full details and statements of witnesses.

2. If death, serious injuries, or serious damages are caused, the accident shall be reported immediately by telephone or messenger to both the OWNER and the ENGINEER.

3. If any claim is made by anyone against the CONTRACTOR or a Subcontractor on account of any accidents, the CONTRACTOR shall promptly report the facts, in writing, to the ENGINEER and OWNER, giving full details of the claim.

1.19 ULTIMATE DISPOSITION OF CLAIMS BY ONE CONTRACTOR ARISING FROM ALLEGED DAMAGE BY ANOTHER CONTRACTOR

A. During the progress of the work, other contractors may be engaged in performing other work or may be awarded other Contracts for additional work on this project. In that event, the CONTRACTOR shall coordinate the work to be done hereunder with the work of such other contractors and the CONTRACTOR shall fully cooperate with such other contractors and carefully fit its own work to that provided under other Contracts as may be directed by the ENGINEER. The CONTRACTOR shall not commit or permit any act which will interfere with the performance of work by any other CONTRACTOR.

B. If the ENGINEER shall determine that the CONTRACTOR is failing to coordinate his work with the work of the other contractors as the ENGINEER directed, then the OWNER shall have the right to withhold any payments otherwise due hereunder until the CONTRACTOR completely complies with the ENGINEER's directions.

C. If the CONTRACTOR notifies the ENGINEER in writing that another CONTRACTOR is failing to coordinate his work with the work of this Contract as directed, the ENGINEER will promptly investigate the charge. If the ENGINEER finds it to be true, he will promptly issue such directions to the other CONTRACTOR with respect thereto as the situation may require. The OWNER, the ENGINEER, nor any of their agents shall not, however, be liable for any damages suffered by the CONTRACTOR by reason of the other contractor's failure to promptly comply with the directions so issued by the ENGINEER, or by reason of another contractor's default in performance, it being understood that the OWNER does not guarantee the responsibility or continued efficiency of any CONTRACTOR.

D. The CONTRACTOR shall indemnify and hold the OWNER, and the ENGINEER harmless from any and all claims of judgments for damages and from costs and expenses to which the OWNER may be subjected or which it may suffer or incur by reason of the CONTRACTOR's failure to comply with the ENGINEER's directions promptly.

E. Should the CONTRACTOR sustain any damage through any act or omission of any other CONTRACTOR having a Contract with the OWNER for the performance of work upon the site or of work which may be necessary to be performed for the proper execution of the work to be performed hereunder, or through any act or omission of a Subcontractor of such Contract, the CONTRACTOR shall have no claim against the OWNER or the ENGINEER for such damage, but shall have a right to recover such damage from the other CONTRACTOR under the provision similar to the following provisions which have been or will be inserted in the Contracts with such other contractors.

F. Should any other CONTRACTOR having or who shall hereafter have a Contract with the OWNER for the performance of work upon the site sustain any damage through any act or omission of the CONTRACTOR hereunder or through any act or omission of any Subcontractor of the CONTRACTOR, the CONTRACTOR agrees to reimburse such other CONTRACTOR for all such damages and to defend at his own expense any suit based upon such claim and if any judgment or claims against the OWNER shall be allowed, the CONTRACTOR shall pay or satisfy such judgment or claim and pay all costs and expenses in connection therewith and shall indemnify and hold the OWNER harmless from all such claims.

G. The OWNER's right to indemnification hereunder shall in no way be diminished, waived or discharged, by its recourse to assessment of liquidated damages as provided in the Contract, or by the exercise of any other remedy provided for by Contract Documents or by law.

1.20 BLASTING AND EXPLOSIVES

A. Blasting shall not be allowed.

1.21 WEATHER CONDITIONS

A. No work shall be done when the weather is unsuitable. The CONTRACTOR shall take necessary precautions (in the event of impending storms) to protect all work, materials, or equipment from damage or deterioration due to floods, driving rain, or wind. The OWNER reserves the right, through the opinion of the ENGINEER, to order that additional

protection measures over and beyond those proposed by the CONTRACTOR, be taken to safeguard all components of the Project. The CONTRACTOR shall not claim any compensation for such precautionary measures so ordered, nor claim any compensation from the OWNER for damage to the work from weather elements.

B. The mixing and placing of concrete or pavement courses, the laying of masonry, and installation of sewers and water mains shall be stopped during rainstorms, if ordered by the ENGINEER; and all freshly placed work shall be protected by canvas or other suitable covering in such manner as to prevent running water from coming in contact with it. Sufficient coverings shall be provided and kept ready at hand for this purpose. The limitations and requirements for mixing and placing concrete or laying of masonry, in cold weather shall be as described elsewhere in these Specifications.

1.22 PERIODIC CLEANUP: BASIC SITE RESTORATION

A. Disposal of Debris: All debris, materials, piping, and miscellaneous waste products from the work described in this section shall be removed from the project as soon as possible and not less than twice per week. They shall be disposed of in accordance with applicable federal, state, and local regulations. The CONTRACTOR is responsible for determining these regulations and shall bear all costs or retain any profit associated with disposal of these items.

B. When the work involves installation of sewers, drains, water mains, manholes, underground structures, or other disturbance of existing features in or across streets, rights-of-way, easements, or private property, the CONTRACTOR shall (as the work progresses) promptly backfill, compact, grade, and otherwise restore the disturbed area to the basic condition which will permit resumption of pedestrian or vehicular traffic and any other critical activity or functions consistent with the original use of the land. The requirements for temporary paving of streets, walks, and driveways are specified elsewhere. Unsightly mounds of earth, large stones, boulders, and debris shall be removed so that the site presents a neat appearance.

C. The CONTRACTOR shall perform the cleanup work on a regular basis and as frequently as ordered by the ENGINEER. Basic site restoration in a particular area shall be accomplished immediately following the installation or completion of the required facilities in that area. Furthermore, such work shall also be accomplished, when ordered by the ENGINEER, if partially completed facilities must remain incomplete for some time period due to unforeseen circumstances.

D. Upon failure of the CONTRACTOR to perform periodic cleanup and basic restoration of the site to the ENGINEER's satisfaction, the OWNER may, upon five (5) days prior written notice to the CONTRACTOR, without prejudice to any other rights or remedies of the OWNER, cause such work for which the CONTRACTOR is responsible to be accomplished to the extent deemed necessary by the ENGINEER, and all costs resulting therefrom shall be charged to the CONTRACTOR and deducted from the amounts of money that may be due him.

1.23 USE OF FACILITIES BEFORE COMPLETION

A. The OWNER reserves the right to enter and use any portion of the constructed facilities before final completion of the whole work to be done under this Contract. However, only those portions of the facilities which have been completed to the ENGINEER's satisfaction, as evidenced by his issuing a Certificate of Substantial Completion covering that part of the work, shall be placed in service.

B. It shall be the OWNER's responsibility to prevent premature connections to or use of any portion of the installed facilities by private or public parties, persons or groups of persons, before the ENGINEER issues his Certificate of Substantial Completion covering that portion of the work to be placed in service.

C. Consistent with the approved progress schedule, the CONTRACTOR shall cooperate with the OWNER, his agents, and the ENGINEER to accelerate completion of those facilities, or portions thereof, which have been designated for early use by the OWNER.

1.24 POLLUTANT STORAGE SYSTEM SPECIALTY CONTRACTOR (PSSSC)

A. If required for compliance with Broward County (and/or State of Florida) construction permits (and/or licenses / registrations), the CONTRACTOR shall retain a Pollutant Storage System Specialty Contractor (PSSSC), licensed with the State of Florida, to construct the elements required by the Broward County (and/or State of Florida) construction permits (and/or licenses / registrations). It is the responsibility of the CONTRACTOR to determine if they need to retain a PSSSC prior to bidding.

PART 2 -- PRODUCTS (Not Used)

PART 3 – EXECUTION (Not Used)

- END OF SECTION -

SECTION 01011 - SPECIAL INSPECTIONS

PART 1 – GENERAL

1.01 THE REQUIREMENT

A. The CONTRACTOR shall provide a Special Building Inspector, in accordance with the requirements of the Florida Building Code (latest edition), to perform all special inspections required by the Building Department with jurisdiction.

B. The Special Inspector shall be a Professional Engineer licensed in the State of Florida.

C. It is recognized that the scope of services associated with providing the special inspector services cannot be quantified until the Contractor applies for a Building Permit with the City of Hallandale Building Department and the Building Department defines the scope of special inspections. For the purposes of establishing a scope for the inspections, the Contractor shall assume an allowance amount as indicated on the Bid Form to pay for professional engineering services.

F. The allowance amount is an estimate and is a cost pass through item and no mark-ups will be added to this item. The Contractor shall produce documentation upon request verifying actual cost. Any portion of the allowance that remains after all authorized payments have been made will be withheld from contract payments and will remain with the OWNER.

1.02 SPECIAL BUILDING INSPECTOR FORM

A. Contractor shall prepare and submit the Form for “Special Building Inspection” as required by the Building Department with jurisdiction. The form shall be executed by the Professional Engineer licensed in the state of Florida.

B. Provide a copy of the form that is submitted to the Building Department to the Engineer and the OWNER for informational purposes.

1.03 INSPECTION REPORTS

A. Prepare a log of all progress reports and inspections related to the Special Inspections required by the Building Official. The log shall be maintained at the job site.

B. On a weekly basis submit signed and sealed progress reports and inspection reports to the Building Official as per Section 110.10.6.2 of the Broward County Amendments to the Florida Building Code.

C. Provide copies of the reports that are submitted to the Building Department to the Engineer and the OWNER for informational purposes.

1.04 CERTIFICATION

A. The Special Inspector shall submit a Certificate of Compliance prior to scheduling the final building inspection in accordance with the Florida Building Code.

B. The Certificate of Compliance shall state that the work performed by the Contractor was done, substantially in accordance with the applicable portion of the permitted construction documents as delineated in the special building inspection plan.

C. Furnish a copy of the Certificate of Compliance to the OWNER and the Engineer.

PART 2 -- PRODUCTS (Not Used)

PART 3 -- EXECUTION (Not Used)

- END OF SECTION -

SECTION 01015 – WATER FILLED BARRICADES

PART 1 - GENERAL

1.01 THE REQUIREMENTS

A. Plastic water filled barricades shall be high impact, UV resistant and constructed of polyethylene.

B. All plastic water filled barricades for traffic and safety control shall be suitable for traffic channeling and control, lane delineation, crowd control, identification of parking areas and other similar approved uses.

C. The barricade units provided under this Section shall be the only type of barricades permitted for use by the CONTRACTOR for the separation of work zone(s), pedestrian traffic, and other areas requiring partitioning and/or separation on the Project.

D. The use of standard barricades, chain link fencing, temporary plywood walls / handrails, and other similar types of installations shall not be considered acceptable.

PART 2 - PRODUCTS

2.01 BARRICADES

A. Composition: All barricades shall be constructed plastic.

B. Colors: All barricades shall be safety orange.

C. Length: As selected by Contractor

D. Height: 42-inches

E. Barricades shall be designed to allow end-to-end installation with no visible gaps between units.

F. Barricades shall be equipped with a pre-molded attachment area suitable for installation of flashing lights.

G. Barricades shall be equipped with a tamper proof fill and drain caps, designed to be removed only by use of special tools.

H. Barricades shall be Model MB42x72 JSS LCD by OTW Safety, or equal.

I. Equip with flashing lights to be operated at night.

PART 3 – EXECUTION

3.01 CONTRACTOR'S USE OF BARRICADES

A. Barricades shall be furnished where shown on drawings.

B. Barricades shall also be used where other situations arise that require the installation of a temporary barrier between the public and the Work area.

C. The CONTRACTOR shall make all arrangements and provide all requisite labor for the delivery, loading, unloading, filling with water, deployment and redeployment of barricades as required to meet the intent of the Project.

D. The CONTRACTOR shall verify that all barricades, when deployed, are interlocked and filled with water in accordance with manufacturer's recommendation.

E. Draining, repositioning / interlocking, filling and refilling barricades shall be the responsibility of the CONTRACTOR for the duration of the Project. In this capacity, barricades will be refilled / cleaned, when deemed necessary to maintain aesthetic appearance or intended performance. If necessary, the CONTRACTOR shall utilize an anti-fungal inhibitor when filling barricades.

F. The source of water for filling of barricades shall be subject to OWNER approval. The CONTRACTOR shall be responsible for all equipment costs, and labor required for filling / refilling / draining of barricades.

G. Remove barricades from the project site at a date and time agreed upon with the OWNER.

- END OF SECTION -

SECTION 01025 - MEASUREMENT AND PAYMENT

PART 1 -- GENERAL

1.01 THE REQUIREMENT

A. Payment for the various items in the Schedule of Payment items, as further specified herein, shall include all compensation to be received by the CONTRACTOR for furnishing all tools, equipment, supplies, and manufactured articles, and for all labor, operations, taxes, materials, commissions, transportation and handling, bonds, permit fees, insurance, overhead and profit, and incidentals appurtenant to the items of Work being described, as necessary to complete the various items of the Work, all in accordance with the requirements of the Contract Documents, including all appurtenances thereto, and including all costs of compliance with the regulations of public agencies having jurisdiction, including Safety and Health Requirements of the Occupational Safety and Health Administration of the U.S. Department of Labor (OSHA). Such compensation shall also include payment for any loss or damages arising directly or indirectly from the Work.

B. The CONTRACTOR's attention is called to the fact that the quotations for the various items of Work are intended to establish a total price for completing the Work in its entirety. Should the CONTRACTOR feel that the cost for any item of Work has not been established by the Schedule of Payment items or this Section, it shall include the cost for that Work in some other applicable bid item, so that its proposal for the project does reflect its total price for completing the Work in its entirety.

1.02 SUBMITTALS

A. Informational:

1. Schedule of Values: Submit schedule on OWNER's form.

2. Application for Payment.

3. Final Application for Payment.

B. Submittals shall be in accordance with Section 01300 entitled “Submittals” and the OWNER’s standards.

1.03 SCHEDULE OF VALUES

A. Prepare a schedule of values for the Work.

B. Unit Price Work: Reflect unit price quantity and price breakdown from conformed Bid Form.

C. Lump Sum Work:

1. Reflect schedule of values format included in conformed Bid Form.

2. List Bonds and insurance premiums, mobilization, demobilization, facility startup, and contract closeout separately.

3. Break down by Divisions 1 through 17 with appropriate subdivision of each Specification.

D. An unbalanced or front-end loaded schedule will not be acceptable.

E. Summation of the complete schedule of values representing all the Work shall equal the Contract Price.

F. The CONTRACTOR shall submit a Schedule of Values for review with the return of the executed Agreement to the OWNER. The schedule shall contain the installed value of the component parts of Work for the purpose of making progress payments during the construction period.

G. The schedule shall be given in sufficient detail for proper identification of Work accomplished. The Schedule of Values shall directly correlate to each activity outlined in the construction progress schedule and the construction network analysis (specified in the section entitled “Submittals”) to accurately relate construction progress to the requested payment. Each item shall include its proportional share of all costs including the CONTRACTOR's overhead, contingencies and profit. The sum of all scheduled items shall equal the total value of the Contract.

H. If the CONTRACTOR anticipates the need for payment for materials stored on the project site or off-site in bonded warehouse, it shall also submit a separate list covering the cost of materials, delivered and unloaded with taxes paid. This list shall also include the installed value of the item with coded reference to the Work items in the Schedule of Values. Payment for stored materials shall comply with requirements of General Conditions.

1.04 APPLICATION FOR PAYMENT

A. Transmittal Summary Form: Attach one Summary Form with each detailed Application for Payment and include Request for Payment of Materials and Equipment on Hand as applicable. Execute certification by authorized officer of CONTRACTOR.

B. Use detailed Application for Payment Form provided by OWNER.

C. Include accepted schedule of values for each portion of Work and the unit price breakdown for the Work to be paid on unit price basis, and a listing of OWNER-selected equipment, if applicable, and allowances, as appropriate.

D. Preparation:

1. Round values to nearest dollar.

2. List each Change Order and Written Amendment executed prior to date of submission as separate line item. Totals to equal those shown on the Transmittal Summary Form.

3. Submit Application for Payment, including a Transmittal Summary Form and detailed Application for Payment Form, a listing of materials on hand as applicable, and such supporting data as may be requested by OWNER.

1.05 MEASUREMENT—GENERAL

A. Weighing, measuring, and metering devices used to measure quantity of materials for Work shall be suitable for purpose intended and conform to tolerances and Specifications as specified in National Institute of Standards and Technology, Handbook 44.

B. Whenever pay quantities of material are determined by weight, material shall be weighed on scales furnished by CONTRACTOR and certified accurate by state agency responsible. Weight or load slip shall be obtained from weigher and delivered to OWNER or OWNER's representative at point of delivery of material.

C. If material is shipped by rail, car weights will be accepted provided that actual weight of material only will be paid for and not minimum car weight used for assessing freight tariff, and provided further that car weights will not be acceptable for material to be passed through mixing plants.

D. Vehicles used to haul material being paid for by weight shall be weighed empty daily and at such additional times as required by OWNER. Each vehicle shall bear a plainly legible identification mark.

E. Materials that are specified for measurement by the cubic yard measured in the vehicle shall be hauled in vehicles of such type and size that actual contents may be readily and accurately determined. Unless all vehicles are of uniform capacity, each vehicle must bear a plainly legible identification mark indicating its water level capacity. Vehicles shall be loaded to at least their water level capacity. Loads hauled in vehicles not meeting above requirements or loads of a quantity less than the capacity of the vehicle, measured after being leveled off as above provided, will be subject to rejection, and no compensation will be allowed for such material.

F. Where measurement of quantities depends on elevation of existing ground, elevations obtained during construction will be compared with those shown on Drawings. Variations of 1 foot or less will be ignored, and profiles shown on Drawings will be used for determining quantities.

G. Units of measure shown on Bid Form shall be as follows, unless specified otherwise. All methods of measurement shall be approved by the OWNER.

Item	Method of Measurement
AC	Acre—Field Measure
CY	Cubic Yard—Field Measure within limits specified or shown, or measured in vehicle by volume, as specified
EA	Each—Field Count
GAL	Gallon—Field Measure
HR	Hour
LB	Pound(s)—Weight Measure by Scale

Item	Method of Measurement
LF	Linear Foot—Field Measure
LS	Lump Sum—Unit is one; no measurement will be made
SF	Square Foot
SY	Square Yard
TON	Ton—Weight Measure by Scale (2,000 pounds)

1.06 PAYMENT

A. General:

1. Progress payments will be made monthly.

2. The date for CONTRACTOR's submission of monthly Application for Payment shall be established at the Preconstruction Conference.

B. Payment for Lump Sum Work covers all Work specified or shown including but not limited to all material, labor, and equipment for all structural, architectural, mechanical, electrical, fire alarm system, instrumentation, controls, plumbing, ventilation, air conditioning, earthwork, civil work, irrigation, landscaping, painting, roadway paving and signage, operation and maintenance manuals, facility staff training, spare parts, startup and testing, final site work, together with all other appurtenant and miscellaneous work required for a complete installation as indicated in the Contract Documents. Payments for lump sum work will be made at the contract lump sum price(s) entered on the Proposal. All items of work not included but required to complete the work shall be included in the lump sum bid amount. Payment for Lump Sum Work covers all Work specified or shown for the following items:

- Remainder of Page Intentionally Blank -

ITEM	DESCRIPTION
1. Mobilization and demobilization (Shall not exceed 5% of the total base bid price)	Payment for mobilization and demobilization will be made at the lump sum price named in the Bid Schedule. Mobilization includes, but is not limited to, maintenance of traffic, bonds, videos, computer, insurance, construction trailers (complete), site cleanup, sanitary facilities, labor associated with permit acquisition, contractors staging area, project signs, testing, project coordination, and demobilization. Partial payments for mobilization will be made as follows: **Construction % Complete** — **Allowable % of Lump Sum for Mobilization** 5 — 25 10 — 50 25 — 75 100 — 100 **Mobilization and Demobilization** **1** **LS**
2. Consideration for Indemnification	Payment for consideration for indemnification of the OWNER will be based upon the lump sum price named for such work, in accordance with the requirements of the Contract Documents. Payment will be twenty-five dollars for consideration for indemnification named in the bid schedule and shall constitute full compensation for indemnifying the OWNER as specified in the Contract Documents. **Indemnification** **1** **LS**
3. Permit Fees Allowance	Payment for permit fees will be based upon the actual permit fees required by the CONTRACTOR from the various agencies having jurisdiction for construction of the project, in accordance with the Contract Documents. The allowance amount shown on the bid schedule is an estimate of permit fees required for the project and is a cost pass through item and no mark-ups will be added to this item. The CONTRACTOR shall produce documentation upon request verifying actual cost. Only permit fees substantiated by the CONTRACTOR and approved by the ENGINEER will be paid as part of this bid item. **Permit Fees Allowance** **1** **Allowance**

ITEM	DESCRIPTION
4. Special Inspector Allowance	Included in this allowance is all material, labor, and equipment for all work necessary and required for a licensed Professional Engineer to perform special inspections of the Work. This item includes, but is not limited to performing all special inspections required by the Florida Building Code and all discretionary special inspections as required by the City of Hallandale Beach Building Department, completion of all inspection reports, and completion/submittal of the Certification of Compliance. The allowance amount shown on the bid schedule is an estimate of services required. Payment will be based on the actual fee paid directly to the Special Inspector, documented by paid receipts, specifically excluding any labor, mark-up, overhead and profit, administration or other costs involved in obtaining licenses or paying fees. Any portion of this allowance that remains after all authorized payments have been made will be withheld from contract payments and will remain with the Owner. **Special Inspector Allowance** **_1_ Allowance**
5. Undefined Conditions Allowance	Included in this allowance is work associated with undefined conditions or conflicts developing from undefined conditions. All work authorized for payment will be authorized in writing by the OWNER. Amount to be paid per undefined condition or conflict shall be negotiated or agreed to by both parities. The OWNER reserves the right to award any, all or none of the money associated with this allowance. **Undefined Conditions Allowance** **_1_ Allowance**
6. Roofing Replacement	Included in the item is all material, labor, and equipment for all work necessary and required for the replacement of the roofing at the high service pumps building and chlorination area as described in specification section 07510 titled “Built-Up Bituminous Roofing” and section 07600 titled “Flashing and Roofing Accessories” as detailed in the Contract Documents for a complete roofing replacement together with all other appurtenant and miscellaneous work required for a complete installation. The Contractor is responsible for obtaining all necessary permits for the roofing replacement. Payments for lump sum work will be made at the contract lump sum price entered on the Bid Proposal Form. **Roofing Replacement** **_1_ LS**

ITEM	DESCRIPTION
7. Temporary High Service Pumps, Temporary Pipes and Temporary Electrical	Included in the item is all material, labor, and equipment for all work necessary and required for design, permitting, procurement, installation, operation and removal of the temporary high service pumps, temporary piping and temporary electrical shown on the drawings, specified in Section 11001, together with all other appurtenant and miscellaneous work required for a complete and operable temporary high service pumping system. Payments for lump sum work will be made at the contract lump sum price entered on the Bid Proposal Form. **Temporary High Service Pumps, Temporary Pipes and Temporary Electrical** **1 LS**
8. All Other Work	Included in the item is all material, labor, and equipment for all work necessary and required for the replacement of the high service pumps as detailed in the Contract Documents. This item includes, but it not limited to, all general, civil, mechanical, structural, electrical, instrumentation, controls, equipment testing, startup services, and construction sequencing requirements required for a complete and operable system together with all other appurtenant and miscellaneous work required for a complete installation as indicated in the Contract Documents. This item also includes compliance with all general conditions, specific conditions, permit conditions, Division 1 requirements, and all other requirements not included in other bid items for a complete installation as indicated in the Contract Documents. Payments for lump sum work will be made at the contract lump sum price entered on the Bid Proposal Form. All items of work not included but required to complete the work shall be included in the lump sum bid amount. **All Other Work** **1 LS**

1.07 NONPAYMENT FOR REJECTED OR UNUSED PRODUCTS

A. Payment will not be made for following:

1. Loading, hauling, and disposing of rejected material.

2. Quantities of material wasted or disposed of in manner not called for under Contract Documents.

3. Rejected loads of material, including material rejected after it has been placed by reason of failure of CONTRACTOR to conform to provisions of Contract Documents.

4. Material not unloaded from transporting vehicle.

5. Defective Work not accepted by OWNER.

6. Material remaining on hand after completion of Work.

1.08 PARTIAL PAYMENT FOR STORED MATERIALS AND EQUIPMENT

A. Partial Payment: No partial payments will be made for materials and equipment delivered or stored unless Shop Drawings or preliminary operation and maintenance manuals are acceptable to ENGINEER.

B. Final Payment: Will be made only for products incorporated in Work; remaining products, for which partial payments have been made, shall revert to CONTRACTOR unless otherwise agreed, and partial payments made for those items will be deducted from final payment.

1.09 ALLOWANCES

A. The allowances shall be used only at the discretion of and as ordered by the OWNER for such items as unforeseen conditions, unforeseeable conflicts between existing elements of work and the proposed work, unit price items exceed estimated quantities, and any associated work requested by the OWNER including all labor, materials, and services for modifications or extra work to complete the Project that was anticipated, but not specifically included in this Contract.

B. Any portion of these allowances that remain after all authorized payments have been made will be withheld from contract payments and will remain with the OWNER.

PART 2 -- PRODUCTS (NOT USED)

PART 3 -- EXECUTION (NOT USED)

- END OF SECTION -

SECTION 01070 - ABBREVIATIONS

PART 1 -- GENERAL

1.01 THE REQUIREMENT

A. Wherever in these specifications references are made to the standards, specifications, or other published data of the various national, regional, or local organizations, such organizations may be referred to by their acronym or abbreviation only. As a guide to the user of these specifications, the following acronyms or abbreviations which may appear in these specifications shall have the meanings indicated herein.

1.02 ABBREVIATIONS AND ACRONYMS

AAMA	Architectural Aluminum Manufacturer's Association
AASHTO	American Association of the State Highway and Transportation Officials
ACI	American Concrete Institute
ACOE	Army Corps of Engineers
ACPA	American Concrete Pipe Association
AFBMA	Anti-Friction Bearing Manufacturer's Association, Inc.
AGMA	American Gear Manufacturer's Association
AHGDA	American Hot Dip Galvanizers Association
AI	The Asphalt Institute
AIA	American Institute of Architects
AISC	American Institute of Steel Construction
AISI	American Iron and Steel Institute
AITC	American Institute of Timber Construction
AMCA	Air Moving and Conditioning Association
ANSI	American National Standards Institute, Inc.
APA	American Plywood Association
API	American Petroleum Institute
APHA	American Public Health Association
APWA	American Public Works Association
ASA	Acoustical Society of America
ASAE	American Society of Agriculture Engineers
ASCE	American Society of Civil Engineers
ASHRAE	American Society of Heating, Refrigerating, and Air-Conditioning Engineers

ASLE	American Society of Lubricating Engineers
ASME	American Society of Mechanical Engineers
ASMM	Architectural Sheet Metal Manual
ASSE	American Society of Sanitary Engineers
ASTM	American Society for Testing and Materials
AWPA	American Wood Preservers Association
AWPI	American Wood Preservers Institute
AWS	American Welding Society
AWWA	American Water Works Association
BCEPGMD	Broward County Environmental Protection and Growth Management Department (formerly BCEPD)
BCHD	Broward County Health Department
BHMA	Builders Hardware Manufacturer's Association
CMA	Concrete Masonry Association
CRSI	Concrete Reinforcing Steel Institute
DIPRA	Ductile Iron Pipe Research Association
EIA	Electronic Industries Association
ETL	Electrical Test Laboratories
FBC	Florida Building Code
FDEP	Florida Department of Environmental Protection
FDOT	Florida Department of Transportation
FS	Federal Specifications
IEEE	Institute of Electrical and Electronics Engineers
IES	Illuminating Engineering Society
IPCEA	Insulated Power Cable Engineers Association
ISA	Instrument Systems and Automation
ISO	International Organization for Standardization
MBMA	Metal Building Manufacturers Association
MMA	Monorail Manufacturers Association
MTI	Marine Testing Institute
NAAM	National Association of Architectural Metal Manufacturers
NACE	National Association of Corrosion Engineers
NBS	National Bureau of Standards
NEC	National Electrical Code

NEMA	National Electrical Manufacturer's Association
NFPA	National Fire Protection Association
NIOSH	National Institute of Occupational Safety and Health
NIST	National Institute of Standards and Testing
NRCA	National Roofing Contractors Association
NSF	National Science Foundation
NTMA	National Tile and Marble Association
OSHA	Occupational Safety and Health Administration
PCA	Portland Cement Association
PCM	Program Construction Manager
PMT	Program Management Team
SMACCNA	Sheet Metal and Air Conditioning Contractors National Association
SSPC	Steel Structures Painting Council
SSPWC	Standard Specifications for Public Works Construction
SFWMD	South Florida Water Management District
UL	Underwriters Laboratories, Inc.

PART 2 -- PRODUCTS (Not Used)

PART 3 -- EXECUTION (Not Used)

- END OF SECTION –

SECTION 01090 - REFERENCE STANDARDS

PART 1 -- GENERAL

1.01 THE REQUIREMENT

A. Titles of Sections and Paragraphs: Captions accompanying specification sections and paragraphs are for convenience of reference only, and do not form a part of the Specifications.

B. Applicable Publications: Whenever in these Specifications references are made to published specifications, codes, standards, or other requirements, it shall be understood that wherever no date is specified, only the latest specifications, standards, or requirements of the respective issuing agencies which have been published as of the date of the opening of bids, shall apply; except to the extent that said standards or requirements may be in conflict with applicable laws, ordinances, or governing codes. No requirements set forth herein or shown on the Drawings shall be waived because of any provision of, or omission from, said standards or requirements.

C. Specialists, Assignments: In certain instances, Specification text requires (or implies) that specific work is to be assigned to specialists or expert entities, who must be engaged for the performance of that work. Such assignments shall be recognized as special requirements over which the CONTRACTOR has no choice or option. These requirements shall not be interpreted so as to conflict with the enforcement of building codes and similar regulations governing the Work; also they are not intended to interfere with local union jurisdiction settlements and similar conventions. Such assignments are intended to establish which party or entity involved in a specific unit of work is recognized as "expert" for the indicated construction processes or operations. Nevertheless, the final responsibility for fulfillment of the entire set of contract requirements remains with the CONTRACTOR.

1.02 REFERENCE SPECIFICATIONS, CODES, AND STANDARDS

A. Without limiting the generality of other requirements of the specifications, all work specified herein shall conform to or exceed the requirements of all applicable codes.

B. References herein to "Building Code" shall mean the South Florida Building Code (SFBC) Broward Edition. The latest edition of the code as approved and used by the local agency as of the date of the opening of bids, as adopted by the agency having jurisdiction, shall apply to the Work herein, including all addenda, modifications, amendments, or other lawful changes thereto.

C. In case of conflict between codes, reference standards, Drawings and the other Contract Documents, the most stringent requirements shall govern. All conflicts shall be brought to the attention of the ENGINEER for clarification and directions prior to ordering or providing any materials or labor. The CONTRACTOR shall follow the most stringent requirements.

D. Applicable Standard Specifications: The CONTRACTOR shall construct the Work specified herein in accordance with the requirements of the Contract Documents and the referenced portions of those referenced codes, standards, and Specifications listed herein.

E. References herein to "OSHA Regulations for Construction" shall mean Title 29, Part 1926, Construction Safety and Health Regulations, Code of Federal Regulations (OSHA), including all changes and amendments thereto.

F. References herein to "OSHA Standards" shall mean Title 29, Part 1910, Occupational Safety and Health Standards, Code of Federal Regulations (OSHA), including all changes and amendments thereto.

PART 2 -- PRODUCTS (Not Used)

PART 3 -- EXECUTION (Not used)

-END OF SECTION-

SECTION 01200 - PROJECT MEETINGS

PART 1 -- GENERAL

1.01 PRECONSTRUCTION MEETING

A. General: A preconstruction meeting will be held after Award of Contract, but prior to starting work at the site. The ENGINEER will schedule the meeting at a mutually agreed time.

B. Location:

City of Hallandale Beach Water Treatment Plant
630 NW 2nd St
Hallandale Beach, FL 33009
Contact: Mr. John Fawcett
Phone: (954) 457-1610

C. Attendance:

1. Owner
2. Engineer
3. Contractor
4. Major subcontractors
5. Safety representative
6. Representatives of governmental or other regulatory agencies.
7. Program Construction Manager (ENGINEER)

D. Minimum Agenda: The purpose of the meeting is to designate responsible personnel and establish a working relationship. The agenda will include the following:

1. Tentative construction schedule
2. Critical work sequencing
3. Designation of responsible personnel
4. Processing of Field Decisions and Change Orders
5. Adequacy of distribution of Contract Documents
6. Submittal of Shop Drawings and samples

7. Procedures for maintaining record documents

8. Use of site and Owner's requirements

9. Major equipment deliveries and priorities

10. Safety and first aid procedures

11. Security procedures

12. Housekeeping procedures

13. Processing of Partial Payment Requests

14. General regard for community relations

E. Duties: The ENGINEER will preside at the meeting and will keep and distribute meeting minutes.

1.02 PROGRESS MEETING

A. Frequency: Progress meetings will be held weekly during the performance of the work of this Contract. Additional meetings may be called as progress of work dictates. Meetings may be held less frequently at the discretion of the ENGINEER.

B. Meeting Location:

City of Hallandale Beach Water Treatment Plant
630 NW 2nd St
Hallandale Beach, FL 33009

C. Attendance:

1. Owner

2. Engineer

3. Contractor

4. Subcontractors active on-site

5. Others as may be requested by OWNER or ENGINEER

6. The CONTRACTOR may at its discretion request attendance of it suppliers and manufacturers.

D. Minimum Agenda: The purpose of the meetings will be to review progress of the work and maintain coordination efforts. The agenda will include the following:

1. Review and approve minutes of previous meetings.

2. Review progress of Work since last meeting.

3. Review the proposed 2 week look ahead schedule.

4. Review the longer range 30-60 day construction schedule.

5. Note and identify problems which impede planned progress.

6. Develop corrective measures and procedures to regain planned schedule.

7. Revise construction schedule as indicated and plan progress during next work period.

8. Maintaining of quality and work standards.

9. Complete other current business.

10. Schedule next progress meeting.

E. Duties: The ENGINEER will preside at the meeting and will keep and distribute meeting minutes.

PART 2 -- PRODUCTS

(NOT USED)

PART 3 -- EXECUTION

(NOT USED)

- END OF SECTION -

SECTION 01300 - SUBMITTALS

PART 1 - GENERAL

1.01 THE REQUIREMENT

A. This section specifies the means of all submittals. All submittals, whether their final destination is to the Owner, Engineer, or other representatives of the Owner, shall be directed through the Engineer. A general summary of the types of submittals and the number of copies required is as follows:

Copies to Engineer	Submittal Format	Type of Submittal
6	Paper	Progress Schedule
6[1]	Paper	Construction Schedule
1	Digital	Primavera source file of the construction schedule
1	Digital	Schedule of Payment Items
1	Digital	Audio visual preconstruction record
1	Digital	Operations and Maintenance (O&M) Manuals
2[1]	Paper	Operations and Maintenance (O&M) Manuals
1	Digital	Progress Payment Applications
1	Digital	Shop Drawings
1	Digital	Project Photographs
1	Digital	Certificates of Compliance
1	Digital	Warranties
2[2]	As Required	Product Samples
1	Paper	Record Drawings

1 Two hard copies of all final, approved O&M manuals shall be provided.

2 Unless otherwise required in the specific Section where requested.

B. Paper Submittal Format: Paper submittals shall be hard copy prints of the documents.

C. Digital Submittal Format: Digital submittals shall be in searchable Adobe PDF format and shall be accessible through the use of standard, “off-the-shelf” software such as Adobe Reader. Hypertext links shall be embedded throughout the text for ease of navigation between references.

1.02 SUBMITTAL PROCEDURES

A. Transmit each submittal with a form acceptable to the Engineer, clearly identifying the project Contractor, the enclosed material and other pertinent information specified in other parts of this section. Identify variations from Contract Documents and Product or system limitations which may be detrimental to successful performance of the completed Work.

B. Revise and resubmit submittals as required, identify all changes made since previous submittals. Resubmittals shall be noted as such.

C. Distribute copies of reviewed submittals to concerned parties. Instruct parties to promptly report any inability to comply with provisions.

D. Digital Submission Procedures: Digital submission procedures shall be defined during the pre-construction meeting.

1.03 CONSTRUCTION PROGRESS SCHEDULE

A. The Contractor shall have the capability of preparing and utilizing the specified construction progress scheduling techniques. A statement of capability shall be submitted in writing to the Engineer with the return of the executed Agreement to the Owner and will verify that either the Contractor's organization has in-house capability qualified to use the technique or that the Contractor employs a consultant who is so qualified. Capability shall be verified by description of the construction projects to which the Contractor or its consultant has successfully applied the scheduling technique and which were controlled throughout the duration of the project by means of systematic use and updating of the construction progress schedule, the network analysis and associated reports. The submittal shall include the name of the individual on the Contractor's staff who will be responsible for the construction progress schedule and associated reports and for providing the required updating information of same. The Contractor shall submit its proposed progress schedule to the Engineer for review and comment within ten days of the Notice to Award. The Engineer shall have the authority to determine acceptability/correctness of the schedule logic and activity interrelationships. The use of extraneous, nonworking activities and activities which add restraints to the construction schedule shall not be accepted. Baseline schedules that do not meet their contract completion dates shall not be accepted.

B. The computer generated construction progress schedule and associated report shall include the following tabulations: a list of activities in numerical order, a list of activity precedence, schedules sequenced by Early Start Date, Total Float, and Late Start Date. All schedules shall be in color; black and white schedules will **not** be accepted. Each schedule and report shall include the following minimum items.

1. Activity Numbers

2. Estimated Duration

3. Activity Description

4. Early Start Date (Calendar Dated)

5. Early Finish Date (Calendar Dated)

6. Latest Allowable Start Date (Calendar Dated)

7. Latest Allowable Finish Date (Calendar Dated)

8. Status (whether critical)

9. Estimated Cost of the Activity

10. Total Float and Free Float

C. In addition, each construction progress schedule, network analysis and report shall be prefaced with the following summary data:

1. Contract Name and Number

2. Contractor's Name

3. Contract Duration and Float

4. Contract Schedule

5. The Effective or Starting Date of The Schedule (the date indicated in the Notice-to-Proceed)

D. The work day to calendar date correlation shall be based on an 8-hour day and 40-hour week with adequate allowance for holidays, adverse weather, and all other special requirements of the Work. Normal work hours are Monday through Friday, 8:00 am to 5:00 pm. Exceptions for construction sequencing requirements shall be as noted in the Section entitled “Summary of Work”.

E. If the Contractor desires to make changes in its method of operating which affect the construction progress schedule and related items, it shall notify the Engineer in writing stating what changes are proposed and the reason for the change. If the Engineer accepts these changes, in writing, the Contractor shall revise and submit, without additional cost to the Owner, all of the affected portions of the construction progress schedule, and associated reports. The construction progress schedule and related items shall be adjusted by the Contractor only after prior acceptance, in writing by the Engineer. Adjustments may consist of changing portions of the activity sequence, activity durations, division of activities, or other adjustments as may be required. The addition of extraneous, nonworking activities and activities which add restraints to the construction progress schedule shall not be accepted.

F. Except where earlier completions are specified, schedule dates which show completion of all Work prior to the contract completion date shall, in no event, be the basis for claim for delay against the Owner by the Contractor.

G. Construction progress schedules and related items which contain activities showing negative float or which extend beyond the contract completion date will be accepted only upon the condition that the Contractor will comply with recovery schedule requirements as specified in paragraph H. below.

H. Whenever it becomes apparent from the current construction progress schedule and associated reports that delays to the critical path have resulted and the contract completion date will not be met, or when so directed by the Engineer, the Contractor shall take some or all of the following actions at no additional cost to the Owner. They shall submit to the Engineer for approval, a written statement of the steps they intend to take to

remove or arrest the delay to the critical path in the current construction progress schedule.

1. Increase construction manpower in such quantities and crafts as will substantially eliminate the backlog of work.

2. Increase the number of working hours per shift, shifts per day, working days per week, the amount of construction equipment, or any combination of the foregoing, sufficiently to substantially eliminate the backlog of work.

3. Reschedule activities to achieve maximum practical concurrence of accomplishment of activities, and comply with the revised schedule.

I. If when so requested by the Engineer, the Contractor should fail to submit a written statement of the steps they intend to take or should fail to take such steps as reviewed and accepted in writing by the Engineer, the Engineer may direct the Contractor to increase the level of effort in manpower (trades), equipment and work schedule (overtime, weekend and holiday work, etc.) to be employed by the Contractor in order to remove or arrest the delay to the critical path in the current construction progress schedule, and the Contractor shall promptly provide such level of effort at no additional cost to the Owner.

J. If the completion of any activity, whether or not critical, falls more than 100 percent behind its previously scheduled and accepted duration, the Contractor shall submit for approval a schedule adjustment showing each such activity divided into two activities reflecting completed versus uncompleted work.

K. Shop drawings which are not approved on the first submittal or within the time scheduled, and equipment which does not pass the specified tests and certifications shall be immediately rescheduled. The Contractor shall allow a 21 day review period for all shop drawings and other submittals requiring approval by the Engineer.

L. The contract time will be adjusted only in accordance with the General Requirements and other portions of the Contract Documents as may be applicable. If the Engineer finds that the Contractor is entitled to any extension of the contract completion date, the Engineer's determination as to the total number of days extension shall be based upon the current construction progress schedule and on all data relevant to the extension. Such data shall be included in the next updating of the schedule and related items. Actual delays in activities which, according to the construction progress schedule, do not affect any contract completion date will not be the basis for a change therein.

M. From time to time it may be necessary for the contract schedule of completion time to be adjusted by the Owner in accordance with the General Requirements and other portions of the Contract Documents as may be applicable. Under such conditions, the Engineer will direct the Contractor to reschedule the Work or contract completion time to reflect the changed conditions, and the Contractor shall revise the construction progress schedule and related items accordingly, at no additional cost to the Owner.

N. Available float time may be used by the Owner through the Owner's Engineer.

O. The Owner controls the float time and, therefore, without obligation to extend either the overall completion date or any intermediate completion dates, the Owner may initiate

changes that absorb float time only. Owner initiated changes that affect the critical path on the network diagram shall be the sole grounds for extending the completion dates. Contractor initiated changes that encroach on the float time may be accomplished only with the Owner's concurrence. Such changes, however, shall give way to Owner initiated changes competing for the same float time.

P. To the extent that the construction project schedule, or associated report or any revision thereof shows anything not jointly agreed upon or fails to show anything jointly agreed upon, it shall not be deemed to have been accepted by the Engineer. Failure to include on a schedule any element of Work required for the performance of this Contract shall not excuse the Contractor from completing all Work required within any applicable completion date, not withstanding the review of the schedule by the Engineer.

Q. Review and acceptance of the construction progress schedule, and related reports, by the Engineer is advisory only and shall not relieve the Contractor of the responsibility for accomplishing the Work within the contract completion date. Omissions and errors in the construction progress schedule, and related reports shall not excuse performance less than that required by the Contract and in no way make the Engineer an insurer of the Contractor's success or liable for time or cost overruns flowing from any shortcomings in the construction progress schedule, and related reports.

R. The Contractor shall present and discuss the proposed schedule at the preconstruction conference.

S. The construction progress schedule shall be based upon the precedence diagramming method of scheduling and shall be prepared in the form of a horizontal bar chart showing in detail the proposed sequence of the Work and identifying all construction activities included but not limited to yard piping, all structures and treatment units and all related Work specified herein to be performed under the Contract. The schedule shall be time scaled, identifying the first day of each week, with the estimated date of starting and completion of each stage of the Work in order to complete the project within the contract time. The project critical path shall be clearly identified.

T. The progress schedule shall be plotted on 22-inch by 34-inch and 11-inch by 17-inch paper and shall be revised and updated monthly, depicting progress through the last day of the current month and scheduled progress through completion. Six up to date copies of the schedule shall be submitted along with the application for monthly progress payments for the same period.

U. The construction progress schedule shall be developed and maintained using Primavera.

1.04 SCHEDULE OF PAYMENT ITEMS

A. The Contractor shall submit a Schedule of Payment Items for review within two weeks after receiving the Notice to Proceed. The schedule shall contain the installed value of the component parts of Work for the purpose of making progress payments during the construction period and shall directly correlate on an item by item basis (unless otherwise accepted by the Engineer) to each individual activity detailed in the construction progress schedule. The sum of all scheduled items shall equal the total value of the Contract. Reference the Section entitled “Measurement and Payment” for further details.

B. If the Contractor anticipates the need for payment for materials stored on the project site, it shall also submit a separate list covering the cost of materials, delivered and unloaded with taxes paid. This list shall also include the installed value of the item with coded reference to the Work items in the Schedule of Payment Items.

C. The Contractor shall expand or modify the above schedule and materials listing as required by the Engineer's initial or subsequent reviews.

1.05 PROGRESS PAYMENT APPLICATIONS

1. Applications for payments shall be made to the Engineer for review in accordance with the Section entitled “Measurement and Payment”.

1.06 SHOP DRAWINGS AND PRODUCT SAMPLES

A. The Contractor shall submit for review shop drawings for concrete reinforcement, structural details, piping layout and appurtenances, wiring, color selection charts, materials and equipment fabricated especially for this Contract, and materials and equipment for which such Drawings are specified or specifically requested by the Engineer.

B. Shop drawings shall show the principal dimensions, weight, structural and operating features, space required, clearances, type and/or brand of finish or shop coat, grease fittings, etc., depending on the subject of the Drawings.

C. When so specified, or if considered by the Engineer to be acceptable, the manufacturer's specifications, catalog data, descriptive matter, illustrations, etc. may be submitted for review in place of shop drawings. In such case, the requirements shall be as specified for shop drawings, insofar as applicable.

D. All submissions shall be dated and properly referenced to the specifications section and Contract Drawing number. The submittal number shall match the following submittal numbering system (or an equivalent system as approved by the ENGINEER):

Submittal Numbering System

1. Package ID: The package number will reflect the CSI (specification) section number as it appears in the specifications.

2. Subgroup ID: The submittal number will include the CSI number followed by two additional codes. The first will define the type of submittal as follows:

01 Product Data, Specifications, Cut Sheets, Manufacturers certification or approval letters.

02 Shop Drawings

03 Product samples and mock-ups

04 Special requirements as required in the contract documents

05 As-Built Drawings

06 Warranties

07 O&M

08 Spare Parts

The second code will identify individual submittals within that submittal type. The number to the left of the decimal represents the submittal number and the number to the right of the decimal represents the revision number.

Example:

Package	**Submittal**	**Description**
03300	03300-01-1.1	Concrete Admixture A, First Submittal
06400	06400-01-1.2	Re-submittal
		First Submittal
		Product Data
		Finish Carpentry

By the following this code system, all submittals may be entered into the Document Tracking System prior to receipt of submittals. When a particular submittal is received, locate the entry in the Document Tracking project file, add the appropriate information and process. The Document Tracking System will provide the next sequence number.

E. The Contractor shall be responsible for the prompt submittal of all shop drawings so that there shall be no delay to the Work due to the absence of such Drawings. The Engineer will review the shop drawings within 21 calendar days of receipt of such Drawings. Reviewed shop drawings will be returned to the Contractor by electronic mail, posted no later than 21 days after receipt.

F. Time delays caused by rejection of submittals are not cause for extra charges to the Owner or time extensions.

G. Requirements: All shop drawings shall be submitted to the Engineer through the Contractor. The Contractor is responsible for obtaining shop drawings from its subcontractors and returning reviewed Drawings to them. All shop drawings shall be prepared on standard size, 22-inch by 34-inch sheets. All Drawings shall be clearly marked with the name of the project, Owner, Contractor, and building, equipment, or structure to which the drawing applies. Drawings shall be suitably numbered and stamped by the Contractor. Each shipment of Drawings shall be accompanied by a letter of transmittal giving a list of the drawing numbers and the names mentioned above.

H. Product Data: Where manufacturer's publications in the form of catalogs, brochures, illustrations, or other data sheets are submitted in lieu of prepared shop drawings, such submission shall specifically indicate the particular item offered. Identification of such items and relative pertinent information shall be made with indelible ink. Submissions showing only general information will not be accepted.

I. Product data shall include materials of construction, dimensions, performance characteristics, capacities, wiring diagrams, piping and controls, etc.

J. Warranties: Submit per the requirements of Article 1.07.

K. Work Prior to Review: No material or equipment shall be purchased, fabricated especially for this Contract, or delivered to the project site until the required shop drawings have been submitted, processed and marked either "FURNISH AS SUBMITTED" or "FURNISH AS CORRECTED". All materials and Work involved in the construction shall be as represented by said Drawings.

L. The Contractor shall not proceed with any portion of the Work (such as the construction of foundations) for which the design and details are dependent upon the design and details of equipment for which submittal review has not been completed.

M. Contractor's Review: Only submittals which have been checked and corrected should be submitted to the Contractor by its subcontractors and vendors. Prior to submitting shop drawings to the Engineer, the Contractor shall check thoroughly all such Drawings to satisfy itself that the subject matter thereof conforms to the Drawings and Specifications in all respects. Drawings which are correct shall be marked with the date, checker's name and indications of the Contractor's approval, and then shall be submitted to the Engineer. Other Drawings submitted to the Engineer will be returned to the Contractor unreviewed.

N. Contractor's Responsibility: The Engineer’s review of shop drawings will be general and shall not relieve the Contractor of the responsibility for details of design, dimensions, etc., necessary for proper fitting and construction of the Work required by the Contract and for achieving the specified performance.

O. Contractor's Modifications: For submissions containing departures from the Contract Documents, the Contractor shall include proper explanation in its letter of transmittal. Should the Contractor submit for review equipment that requires modifications to the structures, piping, layout, etc. detailed on the Drawings, it shall also submit for review details of the proposed modifications. If such equipment and modifications are accepted, the Contractor, at no additional cost to the Owner, shall do all Work necessary to make such modifications.

P. Substitutions: Whenever a particular brand or make of material, equipment, or other item is specified, or is indicated on the Drawings, it is for the purpose of establishing a standard of quality, design, and type desired and to supplement the detailed specifications. Any other brand or make which is equivalent to that specified or indicated may be offered as a substitute subject to the following provisions:

1. The Contractor shall submit for each proposed substitution sufficient details, complete descriptive literature, and performance data together with samples of the materials, where feasible, to enable the Engineer to determine if the proposed

substitution is equal, in all respects including, but not limited to, quality, performance, ease of maintenance, availability of spare parts, and experience record.

2. The Contractor shall submit certified tests, where applicable, by an independent laboratory attesting that the proposed substitution is equal.

3. A list of installations where the proposed substitution is equal. Such listing shall cover a minimum of the previous five years and will furnish project names and contact phone numbers.

4. Where the acceptance of a substitution requires excessive review by the Engineer, revision or redesign of any part of the Work, all such additional review costs, revisions and redesign, and all new Drawings and details required therefore, shall be at Contractor expense.

5. In all cases the Engineer shall be the sole judge as to whether a proposed substitution is to be accepted. The Contractor shall abide by the Engineer's decision when proposed substitute items are judged to be unacceptable and shall in such instances furnish the item as specified. No substitute items shall be used in the Work without written acceptance of the Engineer.

6. Acceptance of any proposed substitution shall in no way release the Contractor from any of the provisions of the Contract Documents.

7. Owner may require, at Contractor's expense, a special performance guarantee or other surety with respect to any substitute.

Q. Complete Submittals: Each submittal shall be complete in all aspects incorporating all information and data required to evaluate the products' compliance with the Contract Documents. Partial or incomplete submissions shall be returned to the Contractor without review.

R. Shop Drawing Distribution: The Contractor shall submit shop drawings electronically to the Engineer for review. The method of electronic submittal shall be defined during the pre-construction meeting. Shop drawings will be reviewed by the Engineer, stamped and distributed with the appropriate box checked either "FURNISH AS SUBMITTED", "FURNISH AS CORRECTED" or “REVISE AND RESUBMIT". The contractor shall print and distribute final approved shop drawings with the Engineer’s review comments as required.

1.07 WARRANTIES

A. When warranties are called for, a sample of the warranty shall be submitted with the shop drawings. The sample warranty shall be the same form that will be used for the actual warranty.

B. Advance copies of warranties shall be submitted with, and considered as shop drawings.

C. Actual warranties shall be originals and notarized.

1.08 CERTIFICATES

A. Four copies of certificates of compliance and test reports shall be submitted for requested items to the Engineer prior to request for payment.

1.09 PRODUCT SAMPLES

A. Contractor shall furnish for review all product samples as required by the Contract Documents or requested by the Engineer to determine compliance with the specifications.

B. Samples shall be of sufficient size or quantity to clearly illustrate the quality, type, range of color, finish or texture and shall be properly labeled to show complete project identification, the nature of the material, trade name of manufacturer and location of the Work where the material represented by the sample will be used.

C. Samples shall be checked by the Contractor for conformance to the Contract Documents before being submitted to the Engineer and shall bear the Contractor's stamp certifying that they have been so checked. Transportation charges on samples submitted to the Engineer shall be prepaid by the Contractor.

D. Engineer's review will be for compliance with the Contract Documents, and its comments will be transmitted to the Contractor with reasonable promptness.

E. Acceptable samples will establish the standards by which the completed Work will be judged.

1.10 OPERATION AND MAINTENANCE MANUALS

A. General: The Contractor shall furnish and deliver to the Engineer two (2) complete Operation and Maintenance (O&M) Manuals for the substantial, complete systems including instructions, technical bulletins, and any other printed matter such as diagrams, prints or drawings, containing full information required for the proper operations, maintenance, and repair of all Contractor furnished equipment. Also included shall be a spare parts diagram and complete spare parts list. These requirements are a prerequisite to the operation and acceptance of equipment. Each O&M Manual shall be bound together in appropriate three-ring hard cover binders. A detailed table of contents shall be provided for each Manual. Provide an appropriate label on the binder edge. Provide tabs and separate sections for operation, maintenance, spare parts, etc.

B. Written operations and maintenance instructions are required for all equipment items supplied for this project. The amount of detail shall be commensurate with the complexity of the equipment item. Extensive pictorial cuts of equipment are required for operator reference in servicing.

C. Information not applicable to the specific piece of equipment installed on this project shall be struck from the Manual by the Contractor. Information provided shall include a source of replacement parts and names of service representatives, including addresses and telephone numbers.

D. When written instructions include shop drawings and other information previously reviewed by the Engineer, only those editions which were accepted by the Engineer, and which accurately depict the equipment installed, shall be incorporated in the O&M Manual.

E. Maintenance and Lubrication Schedules: The Contractor shall include in the O&M Manual, for all Contractor furnished mechanical and electrical equipment including switchgear and motor control centers, instrumentation, valves, gates, etc., complete maintenance and lubrication schedules. Separate forms will be submitted for each piece of equipment.

F. The Contractor shall include in the O&M Manual, for all Contractor furnished pumps and motors, complete data sheets. Separate forms shall be submitted for each different type and size of pump and motor. Sample forms are included at the end of this section.

G. Availability of the O&M Manual is a prerequisite to the operation and acceptance of the system. Instructions shall be bound together in appropriate three-ring binders. A detailed Table of Contents shall be provided for each set. Written operation and maintenance instructions shall be required for all equipment items supplied. The amount of detail shall be commensurate with the complexity of the equipment item. They shall include all mechanical and electrical equipment such as valves, etc.

H. All Final O&M Manuals shall also be submitted in whole in electronic format on compact disk. Electronic O&M manuals shall contain information in standard formats (Adobe, PDF, Word, AutoCAD, HTML, etc.) and shall be easily accessible through the use of standard, “off-the-shelf” software such as an Internet browser. Hypertext links shall be embedded throughout the text for ease of navigation between references.

1.11 RECORD DRAWINGS

A. The Contractor shall keep and maintain, at the job site, one record set of Drawings. On these, it shall mark all project conditions, locations, configurations, and any other changes or deviations which may vary from the details represented on the original Contract Drawings, including buried or concealed construction and utility features which are revealed during the course of construction. Special attention shall be given to recording the horizontal and vertical location of all buried utilities that differ from the locations indicated, or which were not indicated on the Drawings. Said record drawings shall be supplemented by detailed sketches as necessary or directed to indicate, fully, the Work as actually constructed. These master record drawings of the Contractor's representation of as-built conditions, including all revisions made necessary by addenda and change orders shall be maintained up-to-date during the progress of the Work.

B. At a minimum the record drawings shall be reviewed on the 20th working day of every third month after the month in which the final Notice-to-Proceed is given as well as on completion of Work. Failure to maintain the record drawings up-to-date shall be grounds for withholding monthly progress payments until such time as the record drawings are brought up-to-date.

C. Record drawings shall be accessible to the Engineer at all times during the construction period.

D. Final payment will not be acted upon until the Contractor-prepared record drawings have been delivered to the Engineer. Said up-to-date record drawings shall be in the form of a set of prints with carefully plotted information overlaid in pencil.

E. Upon substantial completion of the Work and prior to final acceptance, the Contractor shall finalize and deliver a complete set of record drawings to the Engineer for transmittal to the Owner, conforming to the construction records of the Contractor. This set of drawings shall consist of corrected drawings showing the reported location of the Work. The information submitted by the Contractor and incorporated in the Record Drawings will be assumed to be correct, and the Engineer will not be responsible for the accuracy of such information, and for any errors or omissions which may appear on the Record Drawings as a result.

F. The information submitted by the Contractor in the record drawings shall be certified by a land surveyor registered in the State of Florida.

G. The record drawings shall show the exact location of all structures and all mains within the right-of-way or easement, size and type of material of mains, all deflection points (vertical and horizontal), top pipe elevations and stationing at 100-foot increments, and exact dimensions and locations of all fittings and valves.

1.12 AUDIO-VISUAL PRECONSTRUCTION RECORD

A. General:

1. Prior to commencing work, the CONTRACTOR shall have a continuous color audio-video digital recording taken of the entire Project, including adjacent work areas, plant site and all other areas that will be disturbed by the Contractor's operations, to serve as a record of preconstruction conditions.

2. Video shall be transmitted to the ENGINEER digitally.

3. No construction shall begin prior to review and acceptance of the video recording covering the respective, affected construction area by the ENGINEER.

4. The ENGINEER shall have the authority to reject all or any portion of the video recording not conforming to the specifications and order that it be redone at no additional charge.

5. The CONTRACTOR shall reschedule unacceptable coverage within five days after being notified.

6. The ENGINEER shall designate those areas, if any, to be omitted from or added to the audio-video coverage. Recordings shall not be performed more than ninety days prior to construction in any area.

7. All video recording shall become property of the City.

B. Services:

1. The CONTRACTOR shall engage the services of a professional videographer to prepare the audio-video digital recording of the project site.

2. The audio-visual preconstruction recording shall be prepared by a responsible commercial firm known to be skilled and regularly engaged in the business of preconstruction color audio-video documentation.

3. The videographer shall furnish to the ENGINEER a list of all equipment to be used for the audio-video recording, i.e., manufacturer's name, model number, specifications and other pertinent information.

4. Submit the names and addresses of two references that the videographer has performed color audio-video recordings for on projects of a similar nature within the last twelve months.

5. The total audio-video system shall reproduce bright, sharp, clear pictures with accurate colors. The audio portion of the recording shall reproduce the commentary of the camera operator with proper volume and clarity, and be free from distortion and interruptions.

C. Recorded Information - Audio: Each audio-video recording shall begin with the current date, project name and municipality and be followed by the general location; i.e., process structure, or area, viewing side and direction of progress. The audio track shall consist of an original live recording. The recording shall contain the narrative commentary of the videographer, recorded simultaneously with its fixed elevation video record of the zone of influence of construction.

E. Recorded Information - Video: All video recordings must, by electronic means, display continuously and simultaneously, generated with the actual recording, transparent digital information to include the date and time of recording. The date information shall contain the month, day and year. The time information shall contain the hours, minutes, and seconds. Additional information shall be displayed periodically. Such information shall include, but not be limited to, project name, process structure or area, and the viewing side. This transparent information shall appear on the extreme upper left hand third of the screen.

F. Conditions for Recording: All recording shall be done during times of good visibility. No recording shall be done during precipitation, mist or fog. The recording shall only be done when sufficient sunlight is present to properly illuminate the subjects of recordings and to produce bright, sharp video recordings of those subjects.

G. Video Coverage: Video coverage shall include all surface features located within the zone of influence of construction supported by appropriate audio coverage. Such coverage shall include, but not be limited to, existing driveways, sidewalks, curbs, pavement, landscaping, fences, signs and interior and exterior of existing structures affected by the work and the exteriors of structures adjacent to the work, and any other on-site area that will be occupied or impacted by the CONTRACTOR or any of his subcontractors or suppliers within the area covered.

1.13 PROJECT PHOTOGRAPHS

A. The CONTRACTOR shall photograp the progress of the construction on a monthly basis. A minimum of 12 digital progress photographs is required each month.

B. A minimum of 12 digital photograph shall be submitted to the ENGINEER with the CONTRACTOR's monthly estimate. The digital photots shall be labeled with the following information.

1. Site Work
2. Photo Number
3. Date picture was taken
4. Description

1.14 SUPPLEMENTS

A. The supplements listed below following "END OF SECTION" are part of this Specification.

1. Forms: Transmittal of Contractor's submittal.

PART 2 - PRODUCTS (Not Used)

PART 3 -- EXECUTION (Not Used)

- END OF SECTION -

TRANSMITTAL OF CONTRACTOR'S SUBMITTAL

(Attach to Each Submittal)

DATE:_____

TO:_____

_____

_____

_____

_____

Submittal No._____

☐ New Submittal ☐ Resubmittal

Previous Submittal No.:_____

Project: No._____

Project No.:_____

Specification Section No.: _____

FROM:_____
Contractor

_____

_____

_____

(Cover only one section with each transmittal)
Schedule Date of Submittal

_____

SUBMITTAL TYPE: ☐ Shop Drawing ☐ Contract Closeout ☐ "Or-Equal"/Substitute
☐ Quality Control ☐ Sample

The following items are hereby submitted:

Number of Copies	Description of Item Submitted (Type, Size, Model Number, Etc.)	Spec. Para. No.	Drawing or Brochure Number	Contains Variation to Contract	
				No	Yes

Contractor hereby certifies that (i) Contractor has complied with the requirements of Contract Documents in preparation, review, and submission of designated Submittal and (ii) the Submittal is complete and in accordance with the Contract Documents and requirements of laws and regulations and governing agencies.

By: _____
Contractor (Authorized Signature)

SECTION 01400 - QUALITY CONTROL

PART 1 -- GENERAL

1.01 THE REQUIREMENT

A. Testing Laboratory Services

1. The CONTRACTOR shall retain a laboratory to perform all testing described in the specifications. The CONTRACTOR shall pay for all testing costs, including transporting all samples and test specimens

2. Materials to be tested include, but are not necessarily limited to the following: cement, concrete aggregate, concrete, bituminous paving materials, structural and reinforcing steel, waterproofing, select backfill, crushed stone or gravel and sand.

3. Electrical equipment testing, instrumentation calibration, pump testing, equipment testing and all other testing called for in the specifications shall be performed by firms regularly engaged in testing of the various equipment supplied.

3. Tests required by the OWNER shall not relieve the CONTRACTOR from the responsibility of supplying test results and certificates from manufacturers or suppliers to demonstrate conformance with the Specifications.

4. Procedure

   a. The CONTRACTOR shall plan and conduct his operations to permit taking of field samples and test specimens, as required, and to allow adequate time for laboratory tests.

   b. The collection, field preparation and storage of field samples and test specimens shall be as directed by the ENGINEER with the cooperation of the CONTRACTOR.

5. Significance of Tests: Test results shall be binding on both the CONTRACTOR and the OWNER, and shall be considered irrefutable evidence of compliance or noncompliance with the Specification requirements, unless supplementary testing shall prove, to the satisfaction of the OWNER, that the initial samples were not representative of actual conditions.

6. Supplementary and Other Testing: Nothing shall restrict the CONTRACTOR from conducting tests he may require. Should the CONTRACTOR at any time request the OWNER to consider such test results, the test reports shall be certified by an independent testing laboratory acceptable to the OWNER. Testing of this nature shall be conducted at the CONTRACTOR's expense.

1.02 IMPERFECT WORK, EQUIPMENT, OR MATERIALS

A. Any defective or imperfect work, equipment, or materials furnished by the CONTRACTOR which is discovered before the final acceptance of the work, as established by the Certificate of Substantial Completion, or during the subsequent guarantee period, shall be removed immediately even though it may have been overlooked by the ENGINEER and estimated for payment. Any equipment or materials condemned or rejected by the ENGINEER shall be tagged as such and shall be immediately removed from the site. Satisfactory work or materials shall be substituted for that rejected.

B. The ENGINEER may order tests of imperfect or damaged work, equipment, or materials to determine the required functional capability for possible acceptance, if there is no other reason for rejection. The cost of such tests shall be borne by the CONTRACTOR; and the nature, tester, extent and supervision of the tests will be as determined by the ENGINEER. If the results of the tests indicate that the required functional capability of the work, equipment, or material was not impaired, consistent with the final general appearance of same, the work, equipment, or materials may be deemed acceptable. If the results of such tests reveal that the required functional capability of the questionable work, equipment, or materials has been impaired, then such work, equipment, or materials shall be deemed imperfect and shall be replaced. The CONTRACTOR may elect to replace the imperfect work, equipment, or material in lieu of performing the tests.

1.03 INSPECTION AND TESTS

A. The CONTRACTOR shall allow the ENGINEER ample time and opportunity for testing materials and equipment to be used in the work. He shall advise the ENGINEER promptly upon placing orders for material and equipment so that arrangements may be made, if desired, for inspection before shipment from the place of manufacture. The CONTRACTOR shall at all times furnish the ENGINEER and his representatives, facilities including labor, and allow proper time for inspecting and testing materials, equipment, and workmanship. The CONTRACTOR must anticipate possible delays that may be caused in the execution of his work due to the necessity of materials and equipment being inspected and accepted for use. The CONTRACTOR shall furnish, at his own expense, all samples of materials required by the ENGINEER for testing, and shall make his own arrangements for providing water, electric power, or fuel for the various inspections and tests of structures and equipment.

B. The CONTRACTOR shall furnish the services of representatives of the manufacturers of certain equipment, as prescribed in other Sections of the Specifications. The CONTRACTOR shall also place his orders for such equipment on the basis that, after the equipment has been tested prior to final acceptance of the work, the manufacturer will furnish the OWNER with certified statements that the equipment has been installed properly and is ready to be placed in functional operation. Tests and analyses required of equipment shall be paid for by the CONTRACTOR, unless specified otherwise in the Section which covers a particular piece of equipment.

C. Where other tests or analyses are specifically required in other Sections of these Specifications, the cost thereof shall be borne by the party (OWNER or CONTRACTOR) so designated in such Sections. The OWNER will bear the cost of all tests, inspections,

or investigations undertaken by the order of the ENGINEER for the purpose of determining conformance with the Contract Documents if such tests, inspection, or investigations are not specifically required by the Contract Documents, and if conformance is ascertained thereby. Whenever nonconformance is determined by the ENGINEER as a result of such tests, inspections, or investigations, the CONTRACTOR shall bear the full cost thereof or shall reimburse the OWNER for said cost. In this connection, the cost of any additional tests and investigations, which are ordered by the ENGINEER to ascertain subsequent conformance with the Contract Documents, shall be borne by the CONTRACTOR.

PART 2 -- PRODUCTS

(NOT USED)

PART 3 -- EXECUTION

(NOT USED)

- END OF SECTION -

SECTION 01510 - TEMPORARY UTILITIES

PART 1 -- GENERAL

1.01 THE REQUIREMENT

A. It shall be the CONTRACTOR's responsibility to provide equipment that is adequate for the performance of the Work under this Contract within the time specified. All equipment shall be kept in satisfactory operating condition, shall be capable of safely and efficiently performing the required Work, and shall be subject to review by the OWNER's representative at any time within the duration of the Contract. All Work hereunder shall conform to the applicable requirements of the OSHA Standards for Construction.

B. The CONTRACTOR shall provide for utilities and services for its own operations. The CONTRACTOR shall furnish, install and maintain all temporary utilities during the contract period including removal upon completion of the Work.

1.02 POWER AND LIGHTING

A. Power: The CONTRACTOR shall provide all necessary power required for its operations under the Contract, and shall provide and maintain all temporary power lines required to perform the Work in a safe and satisfactory manner.

B. Construction Lighting: All Work conducted at night or under conditions of deficient daylight shall be suitably lighted to ensure proper Work and to afford adequate facilities for inspection and safe working conditions. Temporary lighting shall be maintained during nonworking periods if the area is subject to access by the public or OWNER's personnel.

C. Electrical Connections: All temporary connections for electricity shall be subject to review by the ENGINEER and the power company representative, and shall be removed in like manner at the CONTRACTOR's expense prior to final acceptance of the Work.

D. Separation of Circuits: Unless otherwise permitted by the ENGINEER, circuits separate from lighting circuits shall be used for all power purposes.

E. Construction Wiring: All wiring for temporary electric light and power shall be properly installed and maintained and shall be securely fastened in place. All electrical facilities shall conform to the requirements of Subpart K of the OSHA Safety and Health Standards for Construction.

1.03 WATER SUPPLY

A. Water Supply for Contractor's Construction Trailer: The CONTRACTOR shall arrange for and pay for all costs for all water to the CONTRACTOR's trailer. The CONTRACTOR shall provide and maintain all piping, fittings, adapters, and valving as may be required. It is the Contractor's responsibility to arrange through the Owner, for location and installation of a 2-inch water meter and backflow preventer at a location to be determined in the field with

the Owner. A deposit to be paid by the Contractor is required for meter rental and all water shall be purchased at the prevailing rates.

B. Water Supply for Testing the High Service Pump Station: OWNER will provide water free of charge.

C. Water for Disinfection of the High Service Pump Station and Pipe Pressure Testing: OWNER will provide water free of charge. The CONTRACTOR shall provide all necessary temporary materials, equipment and labor to convey the water used for disinfection and pipe pressure testing.

D. Removal of Water Connections: Before final acceptance of the Work on the project, all temporary connections and piping installed by the CONTRACTOR shall be entirely removed, and all affected improvements shall be restored to their original condition, or better, to the satisfaction of the ENGINEER and to the agency owning the affected utility.

E. Fire Protection: The construction, and all other parts of the Work shall be connected with the CONTRACTOR's water supply system and shall be adequately protected against damage by fire. Hose connections and hose, water casks, chemical equipment, or other sufficient means shall be provided for fighting fires in the temporary structures and other portions of the Work, and responsible persons shall be designated and instructed in the operation of such fire apparatus so as to prevent or minimize the hazard of fire. The CONTRACTOR's fire protection program shall conform to the requirements of Subpart F of the OSHA Standards for Construction and all local Fire Department Requirements.

1.04 TEMPORARY SANITARY FACILITIES

A. The CONTRACTOR shall provide and maintain adequate and clean sanitary facilities for the construction work force and visitors. The facilities shall comply with local codes and regulations and be situated in an acceptable location.

1.05 CONFINED SPACES

A. The CONTRACTOR shall provide and maintain a safe working environment in confined spaces. The CONTRACTOR shall follow the applicable requirements of the OSHA Standards for Construction and NIOSH Publications for working in confined spaces.

1.06 TEMPORARY VENTILATION

A. The CONTRACTOR shall provide and maintain adequate ventilation for a safe working environment. In addition, forced air ventilation shall be provided for the curing of installed materials, humidity control and the prevention of hazardous accumulations of dust, gases or vapors.

1.07 SECURITY

A. The Contractor shall install fences and protect the job site against vandalism, burglary, theft, trespassing, as required. The Contractor shall care for and protect against loss or

damage of all material to be incorporated in the construction, the existing structures, equipment and materials for the duration of the Contract, and shall repair or replace damaged or lost materials and damage to structures.

B. The Contractor shall be responsible for providing, maintaining and securing gates used for construction purposes for the duration of the project as required for security purposes.

1.08 STAGING AREA

A. The Contractor can establish staging area(s) suitable for the storage of materials and equipment associated with the project, as defined on the Drawings, and shall be fully responsible for abiding all applicable rules, regulations and conditions having jurisdictional control at the site chosen.

B. The Contractor shall be aware that the staging area shall be limited to the area(s) defined on the Drawings. The Contractor shall arrange, coordinate and take all necessary steps regarding its work effort to work within these site constraints, including off-site parking and material equipment storage, as may required to complete the work. Costs associated with these efforts shall be included in the base bid items for this project.

PART 2 -- PRODUCTS (NOT USED)

PART 3 -- EXECUTION (NOT USED)

- END OF SECTION -

SECTION 01520 – MAINTENANCE OF UTILITY OPERATIONS DURING CONSTRUCTION

PART 1 -- GENERAL

1.01 THE REQUIREMENT

A. The existing plant will be maintained in continuous operation by the OWNER during the entire construction period of the Contract as hereinafter specified. The intent of this Section is to outline the minimum requirements necessary to provide continuous treatment throughout the construction period.

B. Work under the Contract shall be scheduled and conducted by the CONTRACTOR so as not to impede any treatment process except as explicitly permitted hereinafter. In performing the Work shown and specified, the CONTRACTOR shall plan and schedule his Work to meet the plant's daily and seasonal operating requirements, and the constraints and construction requirements as outlined in this Section.

C. The work under the Contract to be performed by the CONTRACTOR may be adjacent to, or within, the work area(s) of other work concurrently in progress that is being performed by other contractors on site. Likewise the work under other Contracts may be adjacent to, or within, the work area(s) of the work under the Contract to be performed by the CONTRACTOR. The CONTRACTOR shall plan, coordinate and schedule his Work with all other contractors on site, to meet the constraints and construction requirements of other Contracts and also meet the plant's daily and seasonal operating requirements as outlined in this Section.

D. The CONTRACTOR shall be responsible for coordinating the general construction and the schedules of electrical, control system, HVAC, plumbing and related trades and for ensuring that permanent or temporary power and controls are available for all existing, proposed, and temporary facilities that are required to be on line at any given time.

E. The CONTRACTOR has the option of providing additional temporary facilities that can eliminate a constraint, provided it is done without cost to the OWNER (including additional OWNER labor) and provided that all requirements of these Specifications are fulfilled. Work not specifically covered in the following paragraphs may, in general, be done at any time during the contract period, subject to the operating requirements and constraints and construction requirements outlined hereinafter. All references to days in this Section shall be consecutive calendar days.

F. The CONTRACTOR is advised that the Work is to be performed in a fully operational water treatment facility, which is the principal source of potable water supply to the City of Hallandale Beach and associated communities. Work activities include the deployment of personnel, equipment and materials within active potable water treatment units, clearwells and storage facilities. The CONTRACTOR shall be fully responsible for all precautionary measures together with all remediation, cleanup, disinfection, regulatory agency fines and all other labor, materials, and costs associated with any contamination of the potable water supply caused directly or indirectly by the activities of the CONTRACTOR in the performance of the Work.

G. Notwithstanding other indemnification requirements of the Contract Documents, the CONTRACTOR shall also indemnify, defend, and hold harmless the CITY, the ENGINEER and the CITY's agents from any and all legal action which may arise from contamination of the potable water supply caused directly or indirectly by the CONTRACTOR in the performance of the Work.

1.02 GENERAL CONSTRAINTS

A. The CONTRACTOR shall schedule the Work so that the plant is maintained in continuous operation. All treatment processes shall be maintained in continuous operation during the construction period except during approved process interruptions. All short-term system or partial systems shutdowns shall be approved by the OWNER and the ENGINEER. Long-term process shutdowns and diversions shall conform to the requirements hereinafter specified and shall be minimized by the CONTRACTOR as much as possible. If in the judgment of the OWNER or ENGINEER, a requested shutdown is not required for the CONTRACTOR to perform the Work, the CONTRACTOR shall utilize approved alternative methods to accomplish the Work. <u>All shutdowns shall be coordinated with and scheduled at times suitable to the OWNER</u>. Shutdowns shall not begin until all required materials are on hand and ready for installation. Each shutdown period shall commence at a time approved by the OWNER, in writing. Where required in the Construction Sequence, the CONTRACTOR shall proceed with the Work continuously, (24 hours/day, 7 days/week) start to finish, until the Work is completed and normal plant operation is restored.

B. If the CONTRACTOR completes all required Work before the specified shutdown period has ended, the OWNER may immediately place the existing system back into service.

C. The CONTRACTOR shall schedule short-term and extended shutdowns in advance and shall present all desired shutdowns in the 30 and 60-day schedules at the construction progress meetings. Shutdowns shall be fully coordinated with the Water Facilities Manager and Chief Operator at least 24 hours before the scheduled shutdown. OWNER personnel shall operate OWNER's facilities involved in the short-term and extended shutdowns.

D. Short-term shutdowns in plant flow will be allowed for tie-ins to existing facilities, installation of temporary bulkheads, etc. All such shutdowns shall be scheduled for low-flow period during the daily diurnal water demand (as determined by the Water Plant Manager) and shall generally be limited to four (4) hours or less depending on water demand, system pressure, weather forecast and amount of potable water stored onsite. The schedule and duration of short-term shutdowns shall be at the discretion of the OWNER.

E. One long-term shutdown (several months) of the high service pump station shall be allowed as described in the specifications following the ENGINEER's acceptance of a temporary high service pump station designed, procured, installed, tested and operated by the CONTRACTOR in accordance with the Contract Documents.

F. Any temporary Work, facilities, roads, walks, protection of existing structures, piping, blind flanges, valves, equipment, etc. that may be required within the CONTRACTOR's Work limits to maintain continuous and dependable plant operation shall be furnished by the CONTRACTOR at no extra cost to the OWNER.

G. The OWNER shall have the authority to order Work postponed, stopped or prohibited that would, in his opinion, unreasonably result in interrupting the necessary functions of the plant operations.

H. If the CONTRACTOR impairs performance or operation of the plant as a result of not complying with specified provisions for maintaining plant operations, then the CONTRACTOR shall immediately make all repairs or replacements and do all Work necessary to restore the plant to operation to the satisfaction of the OWNER and the ENGINEER. Such Work shall progress continuously to completion on a 24-hours per day, seven Work days per week basis.

I. The CONTRACTOR shall provide the services of emergency repair crews on call 24-hours per day.

J. The Broward County Health Department will be contacted by the OWNER at least 24-hours prior to the shutdown of any process unit. CONTRACTOR shall coordinate scheduled shutdowns with the OWNER.

1.03 GENERAL OPERATING REQUIREMENTS, CONSTRAINTS, AND CONSTRUCTION REQUIREMENTS

A. Access to Plant Site, Roadways, and Parking Areas

1. An unobstructed traffic route through the facility shall be maintained at all times for the OWNER's operations personnel and maintenance equipment. Parking for personal vehicles of construction personnel may park on OWNER property within the facility where designated. The CONTRACTOR shall be responsible for providing access to and for preparing and maintaining approved parking areas.

2. Vehicular access to the treatment units and buildings for OWNER personnel shall be maintained at all times by the CONTRACTOR.

3. The CONTRACTOR shall provide temporary measures to protect the existing pavement by filling over with earthen material or supplying other measures acceptable to the ENGINEER. The CONTRACTOR shall repair any damage to existing paved surfaces that occurs during the construction period. Any areas disturbed along the shoulders of the access road and interior roads and elsewhere inside and outside of the plant shall be repaired, graded, seeded, etc. as necessary to match pre-existing conditions.

4. The CONTRACTOR shall not undertake the restoration/construction of new roadway (paved, gravel, or asphalt overlay) shown on the Contract Drawings, until all other Work on the plant improvements has been completed.

B. Personnel Access: Treatment plant personnel shall have access to all areas that remain in operation throughout the construction period. The CONTRACTOR shall locate stored material, dispose of construction debris and trash, provide temporary walkways, provide temporary lighting, and other such Work as directed by the ENGINEER to maintain personnel access to areas in operation. Access and adequate parking areas for plant personnel must be maintained throughout construction.

C. Plumbing Facilities: Unless otherwise allowed by the ENGINEER, sanitary facilities in the existing structures shall be operational at all times for plant operating personnel. All other building plumbing systems such as roof and floor drains, pumping, etc., shall be maintained for all structures.

D. Building Heating and Ventilating: With the exception of the buildings shown on the Drawings to be renovated, heating and ventilating for the existing plant structures shall be in service for the entire construction period. Additional temporary heating and ventilation shall be provided as required to maintain facilities under construction adequately heated and vented and air conditioned. The temperatures to be maintained in any areas occupied by plant operating personnel such as offices, lunchrooms, locker rooms, bathrooms, etc., shall be 70 to 75 degrees Fahrenheit. The temperatures to be maintained in all other interior plant areas, whether new, existing or temporary, shall be maintained at 75 to 80 degrees Fahrenheit. Provide temporary HVAC system for the existing High Service Pump building switchgear room and FPL transformer room when existing roof mounted HVAC units are removed. Provide all necessary power distribution equipment, disconnect, cables, labor, etc. to install and maintain the temporary HVAC system.

E. Power, Light and Communications Systems (General): Electric power, lighting service and communications systems shall be maintained in uninterrupted operation in all areas that remain in operation. Individual units may be disconnected as required for replacement, but service shall be available at all times including periods when plant elements are out of service. Shutdown of electrical facilities shall be limited to not more than five (5) hours. The OWNER may allow longer outages under conditions determined by the OWNER. The Electrical Contractor shall coordinate required shutdowns with the General Contractor to minimize the total number of shutdowns required to complete construction. Contractor shall provide temporary lighting, including cables and labor for all areas that remain in operation. OWNER's phone service to the plant shall be maintained in continuous operation during construction.

F. Draining Process Pipes and Conduits (General): The contents of all pipes and conduits to be removed, replaced or relocated (or dewatered for a specific purpose) shall be transferred to a suitable facility in a manner approved by the OWNER through hoses or piping, or by using pumps if hydraulic conditions so require them. Liquid chemical piping shall be purged with potable water, flushed clean and drained. Gaseous chemical piping shall first be purged with clean dry air, nitrogen or other inert gas in accordance with appropriate OSHA, Chlorine Institute, or other chemical institute standards as may apply, then flushed with potable water and drained. The CONTRACTOR shall provide the pumps, piping and hoses at no additional cost to the OWNER. No uncontrolled spillage of a pipe or conduit shall be permitted.

G. Potable Water System: Potable water service shall be maintained in continuous service at all times during construction except for short term interruptions required for tie-ins. Shutdown of the potable water system shall be fully planned and coordinated with the Water Facilities Manager and Chief Operator and shall be limited to not more than two (2) hours. Existing fire hydrants within the plant site shall be operational at all times, unless otherwise approved by the OWNER.

H. Sump Pumps and Sumps: All existing sumps shall be maintained in an operable condition with either existing pumps or temporary pumps. Interim piping, power and controls shall be provided as required by the staged construction sequence.

I. Seal Water and Service Water Piping: A supply of service and seal water and the necessary connections to existing equipment shall be maintained during construction. Interim piping shall be provided as required.

1.04 CONSTRUCTION SEQUENCE AND OPERATIONAL CONSTRAINTS

A. The CONTRACTOR shall plan the Work based on the following suggested outline sequence of construction. The CONTRACTOR shall include consideration of all other ongoing work on site performed by others under other Contracts, as may apply.

B. The following sequence of construction does not include all items necessary to complete the work, but is intended to identify the sequence of critical events necessary to minimize disruption to the on-going treatment plant process and to ensure compliance with regulatory requirements. Events identified below are not all inclusive and additional items of work not shown may be required.

1. Work Element 1 - Construction Mobilization and Submittals

a. Set up field offices (if applicable) and staging area, obtain permits, develop and submit construction schedule, shop drawing schedule and begin shop drawing submittals. Submit detailed construction sequence and schedule for review and acceptance. The work cannot proceed until submittal and acceptance of a detailed construction sequence and schedule.

b. Complete connection to all temporary utility services.

c. Clear and grub areas and install temporary erosion control measures

d. Scheduling Constraints:

1) Work element 1 shall be initiated as soon as possible after the CONTRACTOR receives the Notice to Proceed.

2) Mobilization shall be completed within 60 calendar days after the CONTRACTOR receives the Notice to Proceed.

2. Work Element 2 – Construct Electrical Improvements

a. Scheduling Constraints: Work element 2 shall be initiated concurrently with Work element 1. This work element shall be initiated as soon as possible after the notice to proceed.

b. Convert the Utility Transformer Room to the VFD Room:

1) Perform all demolition work in the Utility Transformer Room. Repurpose the room as the "VFD Room". The existing utility transformer is energized from the FPL side but is not connected to any equipment within the Water Treatment Plant. It can be removed at any time. Coordinate with FPL to remove this transformer.

2) Prepare the VFD Room to install the VFDs. Complete all architectural, structural and HVAC improvements in the VFD Room prior to installing the VFDs.

3) The air-conditioning in the VFD Room shall be operational before VFDs are installed.

4) Install and complete field testing of the VFDs. Complete setup of the VFDs in a timeframe that minimizes the duration that the Temporary High Service Pumps need to operate.

c. Existing Utility Transformer No. 2:

1) Coordinate with FPL as soon as possible to be present to observe the pulling of the power cables from Existing Utility Transformer No. 2 to SWGR-MF-2.

2) Coordinate with FPL to install power meter and energize transformer.

d. SWGR-MF-2: Construct SWGR-MF-2 to the maximum extent possible to minimize the operating duration of the Temporary High Service Pumps.

e. SWBD-HSPS:

1) Remove the existing diesel engine generator located in the High Service Pump Station and construct the housekeeping pad for the SWBD-HSPS. The existing diesel engine generator can be removed at any time.

2) Construct the SWBD-HSPS to the maximum extent possible to minimize the operating duration of the Temporary High Service Pumps.

f. Temporary Switchboard:

1) Initiate and complete the construction of the temporary power system as soon as possible after receiving the notice-to-proceed.

2) Construct to the maximum extent possible all elements of the temporary power system shown on the Drawings without removing existing equipment from service.

3) Coordinate with the CITY the date and time to energize existing equipment (e.g., Lime Plant MCC-2) via the temporary power system. Dates and times to switchover power to the temporary power system shall be agreed to in writing with the CITY.

g. Lime Plant MCC-1: Removal of Lime Plant MCC-1 cannot begin until the Temporary Switchboard is providing power to all loads indicated on the Drawings to be temporarily supplied (e.g. Lime Plant MCC-2), and the Temporary High Service Pumps have been accepted by the Engineer in writing to be placed into continuous service.

h. Existing Switchgear SWGR-MF-1 Modifications:

1) If the modifications to SWGR-MF-1 require it to be de-energized, coordinate a short-term (two hours maximum) shutdown of the Water Treatment Plant with the CITY.

2) The shutdown shall be at a date and time agreed to in writing between 4:00 am and 8:00 am.

3) During the shutdown period the CITY will operate the 6 mgd Diesel Driven Pump and all modifications to SWGR-MF-1 shall be completed and the Water Treatment Plant returned to service.

i. Existing Lime Plant MCC-2 Modifications:

1) Lime Plant MCC-2 must remain in continuous service throughout the project. A short-term (two hours maximum) shutdown will be allowed to perform the Lime Plant MCC-2 modifications shown on the Drawings.

2) The shutdown shall be at a date and time agreed to in writing between 4:00 am and 8:00 am.

3) Modifications to Lime Plant MCC-2 cannot begin until the Temporary Switchboard is providing power to Lime Plant MCC-2 and the Temporary High Service Pumps have been accepted by the Engineer in writing to be placed into continuous service.

3. Work Element 3 – Temporary High Service Pumps

a. Scheduling Constraints: Work element 3 shall be initiated concurrently with Work element 1. This work element shall be initiated as soon as possible after the notice to proceed.

b. Installation of new built-up bituminous roofing as indicated in the specifications can begin at any time.

c. The existing high service pumps must remain in continuous operation until the temporary high service pumps are accepted by the ENGINEER in writing.

d. Reference specification Section 11001 for sequence of construction requirements for the Temporary High Service Pumps.

e. Refer to the Drawings with the titles listed below for additional requirements.

1) "TEMPORARY HIGH SERVICE PUMP STATION"

2) "SUCTION PIPING MODIFICATIONS"

3) "ELECTRICAL OVERALL PLANT SINGLE LINE DIAGRAM – DEMOLITION AND TEMPORARY"

4. Work Element 4 – Demolition of the Existing High Service Pumps

a. Scheduling Constraints: Work element 4 cannot start until Work Element 3 is complete and the ENGINEER issues written permission to begin the demolition of the existing high service pumps.

b. Under this work element, start and complete the following:

1) Remove existing motor driven high service pumps and the diesel driven pump inside of the high service pump building

2) The recently installed American Marsh pump (Labeled High Service Pump No. 1 in the field) associated motor and equipment base shall be turned over the City for salvage.

3) Remove existing piping within the pipe trench

4) Remove existing Lime Plant MCC-1

5) Modify existing Lime Plant MCC-2

5. Work Element 5 – Construction of New High Service Pumps

a. Scheduling Constraints: Schedule starting Work element 5 as soon possible once work element 4 (Demolition of the Existing High Service Pumps) has begun.

b. Under this work element, start and complete the following:

1) Install new high service pumps, piping, valves, instrumentation, controls, electrical, etc. for a complete and operable system.

2) Field instrument calibration

3) Control system loop checking

4) Flush and pressure test piping. Successfully complete disinfection of piping.

5) Provide pressure test and disinfection test results to the ENGINEER and coordinate with the ENGINEER to obtain the permission of the Health Department to make final piping connections and begin functional testing of the pumps.

6) Control system startup and testing

7) Equipment testing and startup.

8) Complete all specified manufacturer training of CITY Personnel

6. Work Element 6 – Remove Temporary High Service Pumps and Restore Site

a. Scheduling Constraints: Work element 6 can begin after ENGINEER issues a Certificate of Substantial Completion for the new high service pumps.

b. Under this work element, start and complete the following:

1) Remove the temporary high service pumps and piping

2) Install restrained plugs and/or caps as needed in the piping and/or valves shown to remain in place as part of the permanent piping

3) Remove temporary concrete pad

4) Remove all temporary electrical equipment, raceways, and conductors

5) Restore all surfaces

6) Complete all remaining sitework

7. Work Element 7 – Project Closeout

c. Contractor shall complete all final punch list items

d. Contractor shall complete project closeout in accordance with Section 01700.

e. Final acceptance of project.

f. Commence warranty period.

C. At no time shall the Contractor undertake to close off any pipelines, or open valves, or take any other action that would affect the operation of the existing system, until authorization is granted by the Owner or Engineer and after proper notification.

D. The work to be performed by the Contractor may involve additions, temporary facilities, and modifications to major operational systems within the treatment plant and other minor sub-processes. The Contractor will be required to "interface" with these active facilities and should ensure that these systems remain operational during all construction activities. Specific constraints to be placed on the work to be performed are summarized below. Note that this listing is subject to revision based on actual conditions.

PART 2 -- PRODUCTS

(NOT USED)

PART 3 -- EXECUTION

(NOT USED)

- END OF SECTION -

SECTION 01530 - PROTECTION OF EXISTING FACILITIES

PART 1 -- GENERAL

1.01 THE REQUIREMENT

A. The CONTRACTOR shall be responsible for the preservation and protection of property adjacent to the work site against damage or injury as a result of its operations under this Contract. Any damage or injury occurring on account of any act, omission or neglect on the part of the CONTRACTOR shall be restored in a proper and satisfactory manner or replaced by and at the expense of the CONTRACTOR to an equal or superior condition than previously existed.

B. The CONTRACTOR shall comply promptly with such safety regulations as may be prescribed by the OWNER or the local authorities having jurisdiction and shall, when so directed, properly correct any unsafe conditions created by, or unsafe practices on the part of, its employees. In the event of the CONTRACTOR's failure to comply, the OWNER may take the necessary measures to correct the conditions or practices complained of, and all costs thereof will be deducted from any monies due the CONTRACTOR. Failure of the ENGINEER to direct the correction of unsafe conditions or practices shall not relieve the CONTRACTOR of its responsibility hereunder.

C. In the event of any claims for damage or alleged damage to property as a result of work under this Contract, the CONTRACTOR shall be responsible for all costs in connection with the settlement of or defense against such claims. Prior to commencement of work in the vicinity of property adjacent to the work site, the CONTRACTOR, at its own expense, shall take such surveys as may be necessary to establish the existing condition of the property. Before final payment can be made, the CONTRACTOR shall furnish satisfactory evidence that all claims for damage have been legally settled or sufficient funds to cover such claims have been placed in escrow, or that an adequate bond to cover such claims has been obtained.

1.02 PROTECTION OF WORK AND MATERIAL

A. During the progress of the work and up to the date of final payment, the CONTRACTOR shall be solely responsible for the care and protection of all work and materials covered by the Contract.

B. All work and materials shall be protected against damage, injury or loss from any cause whatsoever, and the CONTRACTOR shall make good any such damage or loss at its own expense. Protection measures shall be subject to the approval of the ENGINEER.

1.03 BARRICADES, WARNING SIGNS AND LIGHTS

A. The CONTRACTOR shall provide, erect and maintain as necessary, strong and suitable barricades, danger signs and warning lights along all roads accessible to the public, as required by the authority having jurisdiction, to insure safety to the public. All barricades and obstructions along public roads shall be illuminated at night and all lights for this purpose shall be kept burning from sunset to sunrise.

B. Each CONTRACTOR shall provide and maintain such other warning signs and barricades in areas of and around their respective work as may be required for the safety of all those employed in the work, OWNER operating personnel, or those visiting the site.

1.04 TEMPORARY BRIDGES

A. Construct temporary bridges at all points where maintenance of traffic across pipeline construction is necessary.

B. Make bridges over public streets, roads, and highways acceptable to authority having jurisdiction thereover.

C. Bridges erected over private roads and driveways shall be adequate for service to which they will be subjected.

D. Provide substantial guardrails and suitably protected approaches.

E. Provide foot bridges not less than 4 feet wide with handrails and uprights of dressed lumber.

F. Maintain bridges in place as long as conditions of the Work require their use for safety of public, except that when necessary for proper prosecution of the Work in immediate vicinity of bridge. Bridge may be relocated or temporarily removed for such period as ENGINEER may permit.

1.05 EXISTING UTILITIES AND STRUCTURES

A. The term existing utilities shall be deemed to refer to both publicly-owned and privately-owned utilities such as electric power and lighting, telephone, water, gas, storm drains, process lines, sanitary sewers and all appurtenant structures.

B. Where existing utilities and structures are indicated on the Drawings, it shall be understood that all of the existing utilities and structures affecting the work may not be shown and that the locations of those shown are approximate only. It shall be the responsibility of the CONTRACTOR to ascertain the actual extent and exact location of existing utilities and structures. In every instance, the CONTRACTOR shall notify the proper authority having jurisdiction and obtain all necessary directions and approvals before performing any work in the vicinity of existing utilities.

C. Prior to beginning any excavation work, the CONTRACTOR shall, through field investigations, determine any conflicts or interferences between existing utilities and new utilities to be constructed under this project. This determination shall be based on the actual locations, elevations, slopes, etc., of existing utilities as determined in the field investigations, and locations, elevation, slope, etc. of new utilities as shown on the Drawings. If interference exists, the CONTRACTOR shall bring it to the attention of the ENGINEER as soon as possible. If the ENGINEER agrees that interference exists, it shall modify the design as required.

Additional costs to the CONTRACTOR for this change shall be processed through a Change Order as detailed elsewhere in these Contract Documents. In the event the

CONTRACTOR fails to bring a potential conflict or interference to the attention of the ENGINEER prior to beginning excavation work, any actual conflict or interference which does arise during the Project shall be corrected by the CONTRACTOR, as directed by the ENGINEER, at no additional expense to the OWNER.

D. The work shall be carried out in a manner to prevent disruption of existing services and to avoid damage to the existing utilities. Temporary connections shall be provided, as required, to insure uninterruption of existing services. Any damage resulting from the work of this Contract shall be promptly repaired by the CONTRACTOR at its own expense in a manner approved by the ENGINEER and further subject to the requirements of any authority having jurisdiction. Where it is required by the authority having jurisdiction that they perform their own repairs or have them done by others, the CONTRACTOR shall be responsible for all costs thereof.

E. Where excavations by the CONTRACTOR require any utility lines or appurtenant structures to be temporarily supported and otherwise protected during the construction work, such support and protection shall be provided by the CONTRACTOR. All such work shall be performed in a manner satisfactory to the ENGINEER and the respective authority having jurisdiction over such work. In the event the CONTRACTOR fails to provide proper support or protection to any existing utility, the ENGINEER may, at its discretion, have the respective authority to provide such support or protection as may be necessary to insure the safety of such utility, and the costs of such measures shall be paid by the CONTRACTOR.

F. Protection of existing utilities, structures and other facilities: The underground pipes, utilities and structures shown on the Plans are located according to the best information available, but may vary by several feet from both the position and elevation shown. The CONTRACTOR shall explore far enough ahead of its work to determine the exact location and condition of such utilities, structures or facilities so that, before the Work is installed, the ENGINEER may change the line or grade of the pipe or other facility, should that become necessary to avoid a conflict. Should this exploration reveal that adjustments to the work are necessary; the CONTRACTOR shall immediately notify the ENGINEER and coordinate with him to adjust the work in a timely fashion avoiding delays to construction. No request for additional compensation or Contract time (except for a non-compensable time extension at the sole discretion of the ENGINEER, whose decision shall be final) resulting from encountering utilities or structures not shown, or differing in location or elevation from that shown, will be considered. The CONTRACTOR shall explore sufficiently ahead of the Work to allow time for any necessary adjustment without delay occasioned by encountering underground utilities or structures which could have or should have been discovered by timely exploration ahead of the Work shall rest solely with the CONTRACTOR.

G. Relocation of existing utilities: The relocation of existing utilities, as noted on the Plans, or for the convenience of the CONTRACTOR shall be the responsibility of the CONTRACTOR. This work shall be completed by either the forces of the existing utility or the CONTRACTOR's forces at the discretion of the responsible utility. If the work is to be performed by the CONTRACTOR, all work shall be done in accordance with the utility company's requirements. Under no circumstances shall the CONTRACTOR be authorized extra payment for this work, and all cost for the relocation shall be the responsibility of the CONTRACTOR.

H. Any conflicts between the field investigation and the information shown on the Plans shall be brought to the immediate attention of the ENGINEER

1.06 TREES WITHIN PROJECT LIMITS

A. General: The CONTRACTOR shall exercise all necessary precautions so as not to damage or destroy any trees on the project site, and shall not trim or remove any trees unless such trees have been approved for trimming or removal by the jurisdictional agency or OWNER. All existing trees which are damaged during construction shall be replaced by the CONTRACTOR or a certified tree company to the satisfaction of the OWNER.

B. Replacement: The CONTRACTOR shall immediately notify the OWNER if any tree is damaged by the CONTRACTOR's operations. If, in the opinion of the OWNER, the damage is such that replacement is necessary, the CONTRACTOR shall replace the tree at its own expense. The tree shall be of a like size and variety as the tree damaged, or, if of a smaller size, the CONTRACTOR shall pay to the OWNER compensatory payment acceptable to the OWNER.

1.07 NOTIFICATION BY THE CONTRACTOR

A. Prior to any excavation in the vicinity of any existing underground facilities, including all water, sewer, storm drain, gas, petroleum products, or other pipelines; all buried electric power, communications, or television cables; all traffic signal and street lighting facilities; and all roadway and state highway rights-of-way the CONTRACTOR shall notify the respective authorities representing the owners or agencies responsible for such facilities not less than three days nor more than seven days prior to excavation so that a representative

1.08 DETOURS

A. Where authority having jurisdiction requires that traffic be maintained over construction work in a public street, road, or highway, and traffic cannot be maintained on original roadbed or pavement, construct and maintain detour around the Work. Coordinate traffic routing with that of others working in same or adjacent areas.

1.09 RESTORATION OF PAVEMENT

A. General: All paved areas including asphaltic concrete berms cut or damaged during construction shall be replaced with similar materials and of equal thickness to match the existing adjacent undisturbed areas, except where specific resurfacing requirements have been called for in the Contract Documents. All pavements which are subject to partial removal shall be neatly saw cut in straight lines.

B. Temporary Resurfacing: Wherever required by the public authorities having jurisdiction, the CONTRACTOR shall place temporary surfacing, signage, striping and/or other traffic controls as required, promptly after backfilling and shall maintain such surfacing for the period of time fixed by said authorities before proceeding with the final restoration of improvements.

C. Permanent Resurfacing: In order to obtain a satisfactory junction with adjacent surfaces, the CONTRACTOR shall saw cut back and trim the edge so as to provide a clean, sound, vertical joint before permanent replacement of an excavated or damaged portion of pavement. Damaged edges of pavement along excavations and elsewhere shall be trimmed back by saw cutting in straight lines. All pavement restoration and other facilities restoration shall be constructed to finish grades compatible with adjacent undisturbed pavement.

PART 2 – PRODUCTS (NOT USED)

PART 3 – EXECUTION (NOT USED)

- END OF SECTION -

SECTION 01532 – WELLFIELD PROTECTION

PART 1 -- GENERAL

1.01 THE REQUIREMENT

A. The Contractor is advised that the work is to be performed in a fully operational wellfield, which is the principal source of raw water supply to the City of Hallandale Beach, Florida. The Contractor shall be fully responsible for all precautionary measures together with all remediation, cleanup, disinfection, regulatory agency fines and all other labor, materials, and costs associated with any contamination of the potable water supply caused directly or indirectly by the activities of the Contractor in the performance of the work.

B. Notwithstanding other indemnification requirements of the Contract Documents, the Contractor shall also indemnify, defend, and hold harmless the Owner, the Engineer and the Owner's agents from any and all legal action which may arise from contamination of the water supply caused directly or indirectly by the Contractor in the performance of the work.

C. The Contractor is notified of the following:

1. The work shown on the contract drawings will be within a wellfield protection zone as defined by Broward County.

2. The Contractor shall comply with all requirements of Chapter 27, Article XIII Wellfield Protection of the Broward County Code and Chapter 62-521, Wellhead Protection Rule of the Florida Administrative Code.

3. The Contractor shall review the Broward County Wellfield Protection Program literature and the List of Regulated Substances. The Contractor shall review the chemicals and products they intend to use during construction and determine if they are included on the List of Regulated Substances. A copy of the List of Regulated Substances associated with Wellfield Protection can be obtained from Broward County.

4. The Contractor shall complete an affidavit on their letterhead, signed by an authorized officer of the firm which itemizes the regulated chemicals that the Contractor proposes to use during construction, if applicable.

5. Submit the affidavit in accordance with the Section entitled "Submittals".

6. Submit to the Broward County Environmental Protection and Growth Management Department the affidavit and other information as required to acquire permission to initiate construction within the wellfield.

7. Contact Broward County Protection and Growth Management Department for additional assistance regarding compliance with the Wellfield Protection ordinance.

PART 2 – PRODUCTS (NOT USED)

PART 3 – EXECUTION (NOT USED)

- END OF SECTION -

SECTION 01535 - EMERGENCY RESPONSE PLANNING

PART 1 -- GENERAL

1.01 EMERGENCY RESPONSE PLAN REQUIREMENTS

A. During construction of the improvements described in these documents, it is conceivable that Water Treatment Plant water piping could be impacted by construction activities that compromise the ability to produce finished water. Consequently, the CONTRACTOR shall develop an emergency response plan as described herein.

B. The OWNER recognizes that despite precautions implemented by the CONTRACTOR, there could be risk of damage to the OWNER's piping associated with the construction. The purpose of the CONTRACTOR's emergency response plan is to identify and manage risk to the OWNER's critical piping to the extent practical.

1.02 SUBMITTAL REQUIREMENTS

A. Submit the emergency response plan in accordance with the requirements in Section 01300.

B. The emergency response plan must be accepted in writing by the OWNER prior to initiating piping modifications.

1.03 DAMAGE TO EXISTING UTILITIES

A. Any damage to the OWNER's facilities resulting from the CONTRACTOR's activities shall be promptly repaired by the CONTRACTOR at its own expense in a manner approved by the OWNER.

B. The CONTRACTOR shall work continuously, 24 hours per day, 7 days per week to repair any leak to the OWNER's piping resulting from the CONTRACTOR's activities.

C. In the event of a leak resulting the CONTRACTOR's activities, the OWNER and ENGINEER will observe and inspect the CONTRACTOR's repair/replacement activities. The CONTRACTOR shall reimburse the OWNER for all repair observation/inspection labor deemed necessary by the OWNER.

D. If the OWNER has to request opening the water distribution piping interconnects with neighboring utilities, the CONTRACTOR will be held responsible for any costs associated with obtaining water from neighboring utilities.

1.04 EMERGENCY RESPONSE PLAN OUTLINE

A. A conceptual table of contents that briefly outlines the OWNER's expectations for the content of the CONTRACTOR's emergency response plan is presented below.

1. Section 1 – Executive Summary.

2. Section 2 – Introduction: This section shall describe the purpose, goals and overall organization of the emergency response plan.

3. Section 3 – Incident Command System: This section shall describe the incident command system (ICS) organizational structure that will be implemented during a response. The ICS shall be modeled on the National Incident Management System developed by the Department of Homeland Security. The ICS command structure shall include personnel from the OWNER, CONTRACTOR and ENGINEER. The OWNER shall be the incident commander.

4. Section 4 – Crises Communication Plan: This section shall provide procedures and policies for communicating information to the public during an emergency. Members of the crises communication team shall be identified and shall include OWNER, CONTRACTOR and ENGINEER personnel. OWNER personnel lead the crises communication team. OWNER personnel authorized to conduct media interviews will be identified and included in the ICS organizational structure chart. Pre-scripted ("fill in the blank") news releases shall be prepared and included in an Appendix.

5. Section 5 – Agency Notification Plan: This section shall: 1) provide CONTRACTOR procedures for notifying the OWNER of an emergency condition and 2) identify OWNER personnel authorized to communicate with regulatory agencies.

6. Section 6 – Emergency Flow Control: This section shall identify methods for minimizing water consumption via news media releases and lowering of water supply pressure. This section shall also identify procedure for issuance of boil water orders and procedures for opening emergency water interconnects with adjacent water suppliers. Pre-scripted ("fill in the blank") news releases shall be prepared and included in an Appendix.

7. Section 7 – Emergency Operations: This section shall identify: 1) procedures for activating the emergency response plan; 2) potential failure modes; 2) feasible repair options; 3) repair materials recommended for purchase prior to initiating piping modifications; 4) list of available OWNER material and equipment resources that could be supplied during an emergency, such as mobile generators, portable lighting, repair couplings, etc.

8. Appendix A: City of Hallandale Beach Contact List

9. Appendix B: Regulatory Agency Contact List

10. Appendix C: Media Contact List – Television, Radio and Print

11. Appendix D: Pre-scripted News Releases

PART 2 – PRODUCTS (NOT USED)

PART 3 – EXECUTION (NOT USED)

- END OF SECTION -

SECTION 01540 - DEMOLITION AND REMOVAL OF EXISTING STRUCTURES AND EQUIPMENT

PART 1 -- GENERAL

1.01 THE REQUIREMENT

A. This Section covers the demolition, removal, and disposal of existing buildings, structures, pavement, curbs, and sidewalk, removal and disposal of asbestos materials, and any existing equipment including electrical, plumbing, heating and ventilating equipment and piping not required for the operation of the rehabilitated plant as indicated on the Drawings and as specified hereinafter. The CONTRACTOR shall furnish all labor, materials and equipment to demolish buildings and structures and to remove fixtures, anchors, supports, piping and accessories designated to be removed on the Drawings.

B. It is important to note that limited record drawings are available for the existing facilities where demolition work is to be implemented under the scope of this project. To this, end the demolition drawings are generally intended to illustrate the existing conditions through a series of pictures taken as noted. As such, not all existing improvements may be discernible from the contract drawings.

C. The Contractor shall retain full responsibility for coordinating with Owner staff as necessary to visit the Project site, verify existing conditions, and properly include all costs associated with demolition, protection of existing improvements and facilities, and the installation of all Work through Project completion and closeout in accordance with all requirements noted in these specifications, in its base bid.

D. No additional payment to the Contractor will be made as a result of impacts to the Work that may result from existing conditions and improvements, whether readily identifiable on the contract drawings or not.

E. By submitting a Bid, the Contractor acknowledges that it has investigated the site prior to bidding and satisfied itself as to the conditions affecting the demolition work. The Contractor further acknowledges that it has satisfied itself as to the character, quality and quantity of materials and/or obstacles to be encountered insofar as this information is reasonably ascertainable from an inspection of the site, or any contiguous site, as well as from information presented by the Drawings and Specifications made a part of this Contract, or any other information made available to it prior to receipt of Bids. Any failure by the Contractor to acquaint itself with the available information will not relieve it from responsibility for estimating properly the difficulty or cost of successfully performing the work.

F. The Owner assumes no responsibility for any conclusions or interpretations made by the Contractor based on the information made available by the Owner

1.02 TITLE TO EQUIPMENT AND MATERIALS

A. CONTRACTOR shall have no right or title to any of the equipment, materials or other items to be removed from the existing buildings or structures unless and until said equipment, materials and other items have been removed from the premises. The CONTRACTOR shall not sell or assign, or attempt to sell or assign any interest in the said equipment, materials or other items until the said equipment, materials or other items have been removed.

B. CONTRACTOR shall have no claim against the OWNER because of the absence of such fixtures and materials.

1.03 CONDITION OF STRUCTURES AND EQUIPMENT

A. The OWNER does not assume responsibility for the actual condition of structures and equipment to be demolished and removed.

B. Conditions existing at the time of inspection for bidding purposes will be maintained by the OWNER so far as practicable.

C. The information regarding the existing structures and equipment shown on the Drawings is based on visual inspection and a walk-through survey only. Neither the ENGINEER nor the OWNER will be responsible for interpretations or conclusions drawn therefrom by the CONTRACTOR.

D. The Contractor shall perform all requisite field investigations to properly establish costs for such work and include these in its Base Bid.

E. It is of critical importance that the CONTRACTOR schedule and perform the requisite number of pre-bid field visits it deems necessary to ascertain the conditions, construction dimensions, components and general complexity and makeup of both interior, exterior and buried facilities to be demolished under the scope of this Project, as not all improvements may be visible from an external surface observation.

1.04 REMOVAL OF FLORIDA POWER AND LIGHT TRANSFORMER

A. The Drawings illustrate removal of an existing FPL transformer located in the Utility Transformer Room adjacent to the High Service Pump Room. This transformer was de-energized in 2008; it is not in service.

B. The CONTRACTOR shall coordinate with FPL to remove the FPL transformer. FPL contact information follows:

Mr. Lenin Vargas
Hallandale Beach WTP FPL Tech Rep
Email: lenin.vargas@fpl.com
Phone: (954) 442-6362
Mobile: (305) 987-4926

Ms. Idania Gonzalez
FPL Governmental Account Manager
Email: Idania.gonzalez@fpl.com
Phone: (305) 442-5888
Mobile: (305) 753-9695

C. The CONTRACTOR shall contact FPL immediately upon receiving a notice to proceed and schedule FPL to remove its equipment. Failure of the CONTRACTOR to schedule FPL to remove its equipment in a timely manner will not be accepted as grounds for a change in contract time.

1.05 LEAD

A. Lead exists in certain painted surfaces. Refer to Attachment A titled "LEAD PAINT SURVEY REPORT" and specification section 09805 titled "REMOVAL OF LEAD-CONTAINING PAINT".

1.06 ASBESTOS

A. All demolition and renovation projects for commercial facilities require review for asbestos and approval from the Miami-Dade Division of Environmental Resources Management, Department of Regulatory and Economic Resources.

B. An asbestos survey must be completed for all demolition projects and all renovation projects over 160 square feet.

C. The OWNER has retained a laboratory to perform an asbestos survey. A copy of the asbestos survey report is included as an attachment to the specifications.

D. The Contractor shall prepare and submit an "STATEMENT OF RESPONSIBILITIES REGARDING ASBESTOS", if it is required.

E. The Contractor shall obtain all necessary permits.

F. The Contractor shall retain a Florida Licensed Asbestos Contractor for removal and disposal of all regulated asbestos-containing material (ACM) per all local, State of Florida and Federal regulations.

G. It is the responsibility of the Contractor to quantify the amount of asbestos-containing material during bidding and the Contractor's review of the Asbestos Survey.

H. The Contractor shall furnish all labor, equipment and materials, and perform all operations necessary for the removal, containment, cleanup and disposal of all asbestos-containing elements in the structures. Obtain any required permits and payment of any fees relating to this work. The Contractor shall perform his own quality control, administer and supervise his work force as specified herein.

I. The Contractor shall comply with all laws, ordinances, rules and regulations of Federal, State and local authorities regarding worker protection during removal, handling, storing, transporting, and disposing of asbestos-containing waste materials. The Contractor shall submit matters requiring interpretation of standards to the appropriate administrative agency for resolution before starting removal work. The Contractor shall assume responsibility for all costs related to compliance with regulatory requirements

PART 2 -- PRODUCTS

(NOT USED)

PART 3 -- EXECUTION

3.01 DEMOLITION AND REMOVALS

A. The removal of all equipment and piping, and all materials from the demolition of buildings and structure shall, when released by the OWNER and ENGINEER, shall be done by the CONTRACTOR and shall become the CONTRACTOR's property, unless otherwise noted, for disposition in any manner not contrary to the Contract requirements and shall be removed from the site to the CONTRACTOR's own place of disposal.

B. The Electrical Contractor (Subcontractor) specifically, shall de-energize all panelboards, lighting fixtures, switches, circuit breakers, electrical conduits, motors, limit switches, pressure switches, instrumentation such as flow, level and/or other meters, wiring, and similar powered equipment prior to removal. Any electric panels or equipment that are to be retained shall be relocated or isolated by the Electrical Contractor (Subcontractor) specifically, prior to the removal of the equipment specified herein.

C. The CONTRACTOR shall proceed with the removal of the equipment, piping and appurtenances in a sequence designed to maintain the plant in continuous operation as described in Section 01520, Maintenance of Utility Operations During Construction, and shall proceed only after approval of the ENGINEER.

D. Any equipment piping and appurtenances removed without proper authorization, which are necessary for the operation of the existing facilities shall be replaced to the satisfaction of the ENGINEER at no cost to the OWNER.

E. Excavation caused by demolitions shall be backfilled with fill free from rubbish and debris.

3.02 PROTECTION

A. Demolition and removal work shall be performed by competent experienced workmen for the various type of demolition and removal work and shall be carried out through to completion with due regard to the safety of OWNER employees, workmen on-site and the public. The work shall be performed with as little nuisance as possible.

B. The work shall comply with the applicable provisions and recommendation of ANSI A10.2, Safety Code for Building Construction, all governing codes, and as hereinafter specified.

C. The CONTRACTOR shall make such investigations, explorations and probes as are necessary to ascertain any required protective measures before proceeding with demolition and removal. The CONTRACTOR shall give particular attention to shoring and bracing requirements so as to prevent any damage to new or existing construction.

D. The CONTRACTOR shall provide, erect, and maintain catch platforms, lights, barriers, weather protection, warning signs and other items as required for proper protection of the public, occupants of the building, workmen engaged in demolition operations, and adjacent construction.

E. The CONTRACTOR shall provide and maintain weather protection at exterior openings so as to fully protect the interior premises against damage from the elements until such openings are closed by new construction.

F. The CONTRACTOR shall provide and maintain temporary protection of the existing structure designated to remain where demolition, removal and new work is being done, connections made, materials handled or equipment moved.

G. The CONTRACTOR shall take necessary precautions to prevent dust from rising by wetting demolished masonry, concrete, plaster and similar debris. Unaltered portions of the existing buildings affected by the operations under this Section shall be protected by dust-proof partitions and other adequate means.

H. The CONTRACTOR shall provide adequate fire protection in accordance with local Fire Department requirements.

I. The CONTRACTOR shall not close or obstruct walkways, passageways, or stairways and shall not store or place materials in passageways, stairs or other means of egress. The CONTRACTOR shall conduct operations with minimum traffic interference.

J. The CONTRACTOR shall be responsible for any damage to the existing structure or contents by reason of the insufficiency of protection provided.

3.03 WORKMANSHIP

A. The demolition and removal work shall be performed as described in the Contract Documents. The work required shall be done with care, and shall include all required shoring, bracing, etc. The CONTRACTOR shall be responsible for any damage which may be caused by demolition and removal work to any part or parts of existing structures or items designated for reuse or to remain. The CONTRACTOR shall perform patching, restoration and new work in accordance with applicable Technical Sections of the Specifications and in accordance with the details shown on the Drawings. Prior to starting of work, the CONTRACTOR shall provide a detailed description of methods and equipment to be used for each operation and the sequence thereof for review by the ENGINEER.

B. All supports, pedestals and anchors shall be removed with the equipment and piping unless otherwise specified or required. Concrete bases, anchor bolts and other supports shall be removed to approximately 1-inch below the surrounding finished area and the recesses shall be patched to match the adjacent areas. Superstructure wall and roof openings shall be closed, and damaged surfaces shall be patched to match the adjacent areas, as specified under applicable Sections of these Specifications, as shown on the Drawings, or as directed by the ENGINEER. Wall sleeves and castings shall be plugged or blanked off, all openings in concrete shall be closed in a manner meeting the requirements of the appropriate Sections of these Specifications, as shown on the Drawings, and as directed and approved by the ENGINEER.

C. Materials or items designated to remain the property of the OWNER shall be as hereinafter tabulated. Such items shall be removed with care and stored at a location at the site to be designated by the OWNER.

D. Where equipment is shown or specified to be removed and relocated, the CONTRACTOR shall not proceed with removal of this equipment without specific prior approval of the ENGINEER. Upon approval, and prior to commencing removal operations, the equipment shall be operated in the presence of representatives of the CONTRACTOR, OWNER and ENGINEER. Such items shall be removed with care, under the supervision of the trade responsible for reinstallation and protected and stored until required. Material or items damaged during removal shall be replaced with similar new material or item. Any equipment that is removed without proper authorization and is required for plant operation shall be replaced at no cost to the OWNER.

E. Wherever piping is to be removed for disposition, the piping shall be drained by the CONTRACTOR and adjacent pipe and headers that are to remain in service shall be blanked off or plugged and then anchored in an approved manner.

F. Materials or items demolished and not designated to become the property of the OWNER or to be reinstalled shall become the property of the CONTRACTOR and shall be removed from the property and legally disposed of.

G. The CONTRACTOR shall execute the work in a careful and orderly manner, with the least possible disturbance to the public and to the occupants of the building.

H. In general, masonry shall be demolished in small sections, and where necessary to prevent collapse of any construction, the CONTRACTOR shall install temporary shores, struts, and bracing.

I. Where alterations occur, or new and old work join, the CONTRACTOR shall cut, remove, patch, repair or refinish the adjacent surfaces to the extent required by the construction conditions, so as to leave the altered work in as good a condition as existed prior to the start of the work. The materials and workmanship employed in the alterations, unless otherwise shown on the Drawing or specified, shall comply with that of the various respective trades which normally perform the particular items or work.

J. The CONTRACTOR shall finish adjacent existing surfaces to new work to match the specified finish for new work. The CONTRACTOR shall clean existing surfaces of dirt, grease, loose paint, etc., before refinishing.

K. The CONTRACTOR shall cut out embedded anchorage and attachment items as required to properly provide for patching and repair of the respective finishes.

L. The CONTRACTOR shall confine cutting of existing roof areas designated to remain to the limits required for the proper installation of the new work. The CONTRACTOR shall cut and remove insulation, etc., and provide temporary weather tight protection as required until new roofing and flashings are installed.

M. The CONTRACTOR shall remove temporary work, such as enclosures, signs, guards, and the like when such temporary work is no longer required or when directed at the completion of the work.

3.04 MAINTENANCE

A. The CONTRACTOR shall maintain the buildings, structures and public properties free from accumulations of waste, debris and rubbish, caused by the demolition and removal operations.

B. The CONTRACTOR shall provide on-site dump containers for collection of waste materials, debris and rubbish, and he shall wet down dry materials to lay down and prevent blowing dust.

C. At reasonable intervals during the progress of the demolition and removal work or as directed by the ENGINEER, the CONTRACTOR shall clean the site and properties, and dispose of waste materials, debris and rubbish.

3.05 EQUIPMENT AND MATERIALS RETAINED BY OWNER

A. The following equipment and materials will be retained by the OWNER:

1. High Service Pump No. 1 shall be turned over the OWNER and stored at a location at the water treatment plant selected by the OWNER.

B. The equipment and materials shall be moved by the CONTRACTOR to storage areas, on the site, to be designated by the OWNER.

3.05 CLEANUP

A. The Contractor shall, promptly and on a regular basis, remove from the project site all debris resulting from the demolition and removal operations as it accumulates. Upon completion of the demolition work, all materials, equipment, waste and debris of every sort shall be removed and the premises shall be left clean, neat and orderly.

B. Upon completion of the demolition work the disturbed areas shall be graded and prepared to receive proposed construction as specified in Division 2 of these documents.

3.06 STATEMENT OF RESPONSIBILITIES REGARDING ASBESTOS

A. Prepare and submit a written advanced notice form for demolition or renovation of any existing structure.

1. Broward County Environmental Protection and Growth Management Department
Air Quality Division
218 S.W. 1st Avenue
Fort Lauderdale, Florida 33301

2. ENGINEER

3. Building Department

B. An example of the “STATEMENT OF RESPONSIBILITIES REGARDING ASBESTOS” form is presented in the following subsection for reference.

3.07 EXAMPLES FORM (GET ORIGINALS FROM BROWARD COUNTY)

Broward County
ENVIRONMENTAL PROTECTION AND GROWTH MANAGEMENT DEPARTMENT
Pollution Prevention Remediation and Air Quality Division

STATEMENT OF RESPONSIBILITIES REGARDING ASBESTOS

IF YOU ARE PLANNING TO DEMOLISH OR RENOVATE ANY EXISTING STRUCTURE, YOU MAY BE SUBJECT TO FEDERAL AND COUNTY RULES RELATING TO THE DEMOLITION AND THE HANDLING OF ASBESTOS CONTAINING MATERIAL. PLEASE FILL OUT THIS FORM TO DETERMINE IF THE ASBESTOS RULES AND A FEE APPLY TO YOU. SEE REVERSE SIDE FOR ADDITIONAL INFORMATION.

I. PROJECT INFORMATION:

Facility Owner: _____ Phone: _____

Mailing Address: _____ City: _____ Zip: _____

Project Address: _____ City: _____ Zip: _____

Contractor Performing Work: _____ Phone: _____

Email: _____ Building Department Jurisdiction: _____

Estimated Start Date: (MM/DD/YY) _____ Estimated Finish Date: (MM/DD/YY) _____

II. MARK THE APPROPRIATE BOX(ES) IF APPLICABLE:

1. ☐ **Single-family residential home (not for commercial purpose) – If you check this box, skip sections 2 and 3. Review the back of this form and then sign and date this form at the bottom.**

2. FACILITY: (Check One)

☐ Commercial, industrial, or public building ☐ School/ College/ University

☐ Any residential building with more than four dwelling units ☐ Unsafe structure

☐ Two or more residential structures at the same site ☐ Emergency

☐ Any residential property being demolished for commercial purposes or by government order

3. ACTIVITY: (Check all that apply)

Renovations: ☐ Built-up roofing removal (>5580 ft^2): Removal Method: ☐ Hand Tools ☐ Power Saw

☐ Exterior alteration (>160ft^2): ☐ Stucco/Finishes ☐ Other _____

☐ Interior alteration (>160ft^2): ☐ Floor covering ☐ Wall Board ☐ Ceiling ☐ Piping ☐ Floor/Wall Mastic ☐ Wall Finishes

☐ HVAC ☐ Other _____

Demolition: ☐ Total ☐ Partial ☐ Column ☐ Tie Beam ☐ Truss(es) ☐ Exterior Wall(s) ☐ Other _____

III. IF ANY BOX IS MARKED UNDER FACILITY AND ACTIVITY THEN THE FOLLOWING ITEMS ARE REQUIRED:

1. An original *Notice of Demolition or Asbestos Renovation* using DEP form 62-257.900(1)* or electronic notification* must be completed and submitted at least ten (10) working-days before start of project, for:
   - all demolitions
   - all renovations involving at least 160 ft^2, 260 Lft. or 35 ft^3 of regulated asbestos containing material
2. The asbestos survey report **must be done in accordance with Broward County Code Chapter 27, Section 180** to indicate the presence or absence of asbestos containing material.
3. **Payment of the appropriate fee per fee schedule, if applicable.**

I have received information regarding the use of a Florida licensed asbestos professional and understand that I may be subject to the ten (10) working-day advanced notification requirement under the Federal Law regarding demolitions and renovations **(See reverse side)**.

Owner/Authorized Agent (print) _____ Title: _____

Signature _____ Date _____

**Notice of Demolition* or *Asbestos Renovation* form and fee schedule are available at: www.broward.org/epermits

For Official Use: An Asbestos Survey ☐ Is Required ☐ Is Not Required

WHITE - PPRAQD, YELLOW - Building Department, PINK – Applicant

202 AQ-0009 (Rev. 02/13) AQ201044469

WARNING

YOU MAY BE SUBJECT TO SUBSTANTIAL PENALTIES UNDER FEDERAL LAW FOR FAILURE TO PROVIDE WRITTEN NOTIFICATION AT LEAST TEN (10) WORKING-DAYS PRIOR TO DEMOLITION OR RENOVATION. PLEASE BE ADVISED THAT A CITY / COUNTY DEMOLITION OR RENOVATION PERMIT DOES NOT MEET THE REQUIREMENT OF THE TEN DAY NOTIFICATION.

THIS FORM DOES NOT CONSTITUTE A 10 WORKING-DAY NOTIFICATION.

DEMOLITION: The Federal regulations for asbestos require a ten (10) working-day advanced notification from owners or operators (including contractors) engaged in the demolition of a facility. "Facility" is defined to include all structures, installations and multiple buildings, but excludes a single residential building having four or fewer dwelling units. Demolition includes the wrecking or dismantling of any load-supporting structural member. This includes beams and load supporting walls. The notification is required even if no asbestos containing materials are present in the facility, must be accompanied by an asbestos survey performed in accordance with Broward County Code Section 27-180 and the appropriate fee.

RENOVATION: Notification is required for renovation projects of a facility if the amount of Regulated Asbestos Containing Material (RACM) being removed, stripped, or disturbed is greater than or equal to 160 square feet, 260 linear feet of pipe insulation or 35 cubic feet of facility components. The notification is required to be submitted at least ten (10) working-days prior to the renovation and must be accompanied by an asbestos survey performed in accordance with Broward County Code Section 27-180 and the appropriate fee.

The original ***Notice of Demolition or Asbestos Renovation*** DEP Form 62-257.900(1), an **asbestos survey report and the appropriate fee** must be submitted to:

Broward County Environmental Protection and Growth Management Department
Pollution Prevention Remediation and Air Quality Division
One North University Drive, Suite 203
Plantation, FL 33324
954-519-1260

Federal asbestos regulations apply to both the facility owner and operator. Both owner and operator can be held liable for failure to submit a ***Notice of Demolition or Asbestos Renovation*** form at least ten (10) working-days prior to a demolition, or renovation involving greater than 160 square feet, 260 linear feet or 35 cubic feet of RACM.

USE OF A FLORIDA LICENSED ASBESTOS CONSULTANT

Florida Statutes require that no person shall conduct an asbestos survey, develop an Operation and Maintenance Plan, prepare abatement specifications, or monitor and evaluate asbestos abatement, unless trained and licensed as an asbestos consultant with the following exceptions:

- A homeowner may act as a licensed asbestos consultant in the home (four or fewer dwelling units) in which they reside if they sign a disclosure statement at the building department.
- Built-up roofing containing asbestos may be removed by state certified roofers under the direction of an onsite roofing supervisor properly trained in asbestos-containing roof removal.

202 AQ-0009 (Rev. 12/12) AQ201044469

3.08 SUPPLEMENT 1

What's NEW? Asbestos Demolition and Renovation Rules

REVISIONS TO THE BROWARD COUNTY AIR QUALITY CODE

Effective: July 3, 2006

BROWARD COUNTY FLORIDA

Environmental Protection Department
Air Quality Division

Overview

On June 27, 2006 the Board of County Commissioners approved amendments to Broward County Code Chapter 27, Article IV Air Quality that added provisions concerning asbestos. This brochure provides a summary of the new requirements.

To what projects will the Section 27-180 requirements apply?

- The requirements apply to all projects involving the removal of asbestos containing material, and to building demolition and renovation projects. The requirements are in addition to those of the National Emissions Standards for Hazardous Air Pollutants (NESHAP) for asbestos (Code of Federal Regulations, Title 40, Part 61, Subpart M).

What are the notification requirements in Section 27-180?

- For any project subject to the requirements of Section 27-180, the owner, operator or contractor must submit a *Statement of Responsibilities Regarding Asbestos* to the Broward County Environmental Protection Department (EPD). The statements must be submitted at least 10 working days before work begins.

- For projects that are subject to the asbestos NESHAP, the owner, operator or contractor must submit an original *Notice of Asbestos Renovation or Demolition* to the EPD. The notification must be accompanied by a thorough survey documenting whether asbestos containing material is present in the subject areas of the building. The survey must be prepared by or under the supervision of an asbestos consultant licensed in the state of Florida and have an original signature of the asbestos consultant. The notification must be submitted at least 10 working days before work begins. Fax copies are acceptable to the EPD, but they **must** be followed by an original copy.

NEW Asbestos Demolition and Renovation Rules

REVISIONS TO THE BROWARD COUNTY AIR QUALITY CODE

Effective: July 3, 2006

Where can I obtain the notification forms?

- The *Statement of Responsibilities Regarding Asbestos* is a triplicate form on pressure sensitive paper and may be obtained at the address shown on the last page.
- The *Notice of Asbestos Renovation or Demolition* may be obtained at the following link:

  www.dep.state.fl.us/air/forms.htm

What methods may be used for conducting a survey to evaluate the presence of asbestos containing materials?

- The asbestos consultant responsible for the asbestos survey and sampling of suspect asbestos containing material must use one of the survey and sampling protocols established by the State of Florida, the Occupational Safety and Health Administration (OSHA) or the Asbestos Hazard Emergency Response Act (AHERA).

What are the requirements for those who analyze samples collected during an asbestos survey?

- The facility conducting analyses of samples must provide documentation that it is accredited by the National Voluntary Laboratory Accreditation Program (NVLAP), the American Industrial Hygiene Association (AIHA), or any other comparable national laboratory accreditation program recognized by the EPD for the analysis of asbestos.

Can a Phase I Environmental Site Assessment be used to meet the requirements of an asbestos survey?

- Phase I Environmental Site Assessments which do not include an asbestos survey conducted in accordance with one of the protocols referenced in Section 27-180 will not be acceptable to the EPD.

What if there was no asbestos containing material found in the areas of a building subject to renovation?

- A copy of the asbestos survey must be retained at the project site and be available for review by EPD.

For projects that are exempt from the asbestos NESHAP, are there any other requirements besides preparing the *Statement of Responsibilities Regarding Asbestos*?

- The owner or operator must take reasonable precautions to prevent the release of unconfined emissions of particulate matter.

- END OF SECTION -

SECTION 01550 - SITE ACCESS AND STORAGE

PART 1 -- GENERAL

1.01 HIGHWAY LIMITATIONS

A. The CONTRACTOR shall make its own investigation of the condition of available public and private roads and of clearances, restrictions, bridge load limits, and other limitations affecting transportation and ingress and egress to the site of the Work. It shall be the CONTRACTOR's responsibility to construct and maintain any haul roads required for its construction operations.

1.02 TEMPORARY CROSSINGS

A. General: Wherever necessary or required for the convenience of the public or individual residents at street or highway crossings, private driveways, or elsewhere, the CONTRACTOR shall provide suitable temporary bridges over unfilled excavations, except in such cases as the CONTRACTOR shall secure the written consent of the individuals or authorities concerned to omit such temporary bridges, which written consent shall be delivered to the OWNER prior to excavation. All such bridges shall be maintained in service until access is provided across the backfilled excavation. Temporary bridges for street and highway crossing shall conform to the requirements of the authority having jurisdiction in each case, and the CONTRACTOR shall adopt designs furnished by said authority for such bridges, or shall submit designs to said authority for approval, as may be required.

B. Street Use: Nothing herein shall be construed to entitle the CONTRACTOR to the exclusive use of any public street, alleyway, or parking area during the performance of the Work hereunder, and it shall so conduct its operations as not to interfere unnecessarily with the authorized work of utility companies or other agencies in such streets, alleys, ways, or parking areas. No street shall be closed to the public without first obtaining permission of the OWNER and proper governmental authority. Where excavation is being performed in primary streets or highways, one lane in each direction shall be kept open to traffic at all times unless otherwise provided or shown. Toe boards shall be provided to retain excavated material if required by the OWNER or the agency having jurisdiction over the street or highway. Fire hydrants on or adjacent to the Work shall be kept accessible to fire-fighting equipment at all times. Temporary provisions shall be made by the CONTRACTOR to assure the use of sidewalks and the proper functioning of all gutters, sewer inlets, and other drainage facilities.

C. Traffic Control: For the protection of traffic in public or private streets and ways, the CONTRACTOR shall provide, place, and maintain all necessary barricades, traffic cones, warning signs, lights, and other safety devices in accordance with the requirements of the "Manual of Uniform Traffic Control Devices, Part VI - Traffic Controls for Street and Highway Construction and Maintenance Operations," published by U.S. Department of Transportation, Federal Highway Administration (ANSI D6.1). The CONTRACTOR shall

take all necessary precautions for the protection of the Work and the safety of the public. All barricades and obstructions shall be illuminated at night, and all lights shall be kept burning from sunset until sunrise. The CONTRACTOR shall station such guards or flaggers and shall conform to such special safety regulations relating to traffic control as may be required by the public authorities within their respective jurisdictions. All signs, signals, and barricades shall conform to the requirements of Subpart G, Part 1926, of the OSHA Safety and Health Standards for Construction.

D. Street Closure: If closure of any street is required during construction, a formal application for a street closure shall be made to the authority having jurisdiction at least 30 days prior to the required street closure in order to determine necessary sign and detour requirements.

1.03 CONTRACTOR'S SITE ACCESS

A. Gates: The OWNER will allow the use of two gates as indicated on the Staging Plan, titled as follows: 1) City Staff Entrance Gate and 2) Contractor Entrance Gate. The gates will remain closed and locked always, except as described herein. Note that the City Staff Entrance Gate is a motorized gate that can be opened with a Key Card and the Contractor Entrance Gate is a manual gate with a pad lock.

B. City Staff Entrance Gate: The OWNER will provide the CONTRACTOR's project manager with a Key Card to open the City Staff Entrance Gate. The City Staff Entrance Gate shall only be opened by the CONTRACTOR's project manager with the permission of the OWNER. The CONTRACTOR shall coordinate with the OWNER as needed.

C. Contractor Entrance Gate: The CONTRACTOR shall coordinate with the OWNER for opening and closing the Contractor Entrance Gate.

D. Use of Other Gates: Opening and closing of other gates at the facility will be allowed on a case-by-case basis as agreed to with the OWNER.

E. Monitoring: The CONTRACTOR shall be responsible for monitoring the main gate for its personnel and equipment and materials deliveries. The CONTRACTOR shall coordinate with OWNER to open and close all gates.

F. Log Book: The CONTRACTOR shall maintain a daily log of its personnel and all its subordinate subcontractors' personnel that enter the site. The log shall record name, date and entry time and departure time.

1.04 IDENTIFICATION BADGES AND CLOTHING

A. The CONTRACTOR and its subordinate personnel carry identification badges. The badge shall be visible while on the OWNER's property.

B. Identification badges shall include the following:

1. Employee's name

2. Employee photograph

3. Name of employer

C. All CONTRACTOR and its subordinate personnel shall wear an article of clothing that indicate the CONTRACTOR's logo or name. Acceptable examples include hard hats, t-shirts, safety vests that include the CONTRACTOR's logo or name.

1.05 CONTRACTOR'S WORK AND STORAGE AREA

A. Storage areas shall be provided within the designated staging area shown on the Drawings. The staging areas shown are general and do not indicate limits of construction. Responsibility for protection and safekeeping of equipment and materials at or near the sites will be solely that of the CONTRACTOR and no claim shall be made against the OWNER by reasons of any act of an employee or trespasser. Should an occasion arise necessitating access to an area occupied by stored equipment and/or materials, the CONTRACTOR shall immediately move them. No equipment or materials shall be placed upon the OWNER's property until it is acceptable to the OWNER.

B. If the CONTRACTOR requires additional staging area than shown on the Drawings, the CONTRACTOR shall obtain such areas from off-site sources at no additional cost to the OWNER.

C. Upon completion of the Contract, the CONTRACTOR shall remove from the storage areas all of its equipment, temporary fencing, surplus materials, rubbish, etc., and restore the areas.

1.06 TRAFFIC CONTROL

A. The CONTRACTOR shall maintain traffic and protect the public from all damage to persons and property within the Contract Limits, in accordance with all applicable federal, state and local regulations. The CONTRACTOR shall conduct its operations so as to maintain and protect access, for vehicular and pedestrian traffic, to and from all properties and business establishments and joining or adjacent to those streets affected by its operations, and to subject the public to a minimum of delay and inconvenience. Suitable signs, barricades, railing, etc., shall be erected and the Work outlined by adequate lighting at night. Danger lights shall be provided as required. Traffic Control security officers and flaggers shall be provided as may be necessary for the protection of traffic.

B. The use of on-site plant roads, entrance gates, parking areas and property for the CONTRACTOR's personnel parking shall not be permitted except as designated on the Drawings. The CONTRACTOR shall be responsible for enforcing on-site parking regulations. Violators of these on-site parking restrictions will be towed or booted.

C. All dirt or debris spilled from the CONTRACTOR's trucks on existing pavements or other active areas of the facility shall be removed by the CONTRACTOR immediately.

1.07 SECURITY

A. The CONTRACTOR shall care for and protect against loss or damage of all material to be incorporated in the construction for the duration of the project and shall repair or replace damaged or lost materials and damage to structures.

1.08 SAFETY AND PROTECTION DEVICES

A. It shall be the sole responsibility of the CONTRACTOR to protect persons from injury and to avoid property damage. Adequate barricades, construction signs, torches, red lanterns, and guards as required shall be placed and maintained during the progress of the construction work for the protection of the public in compliance with all federal, OSHA and local ordinances.

B. The CONTRACTOR shall have unit responsibility for and be required to make good, at its own expense, all damage to property or adjacent properties caused in the execution of this Contract.

C. The CONTRACTOR shall take all necessary precautions for the safety of its employees on the job and shall comply with all applicable provisions of federal, state and municipal safety laws and regulations to prevent accidents or injury to persons on, about, or adjacent to the premises where the Work is being performed.

D. In the event, the CONTRACTOR's tools or materials delivered to the premises are stolen or damaged, the CONTRACTOR shall be responsible for such theft.

1.09 CONTRACTOR DELIVERY LOGS

A. The CONTRACTOR shall provide a daily log of deliveries to the Water Treatment Plant site for the project. The daily log shall include deliveries received each day with the driver's name and vehicle license number, in addition to expected deliveries for the following day. The log shall be submitted to the ENGINEER at the end of each day for transmittal to the OWNER. This log will be used by the OWNER at its discretion for security purposes at the plant site.

PART 2 -- PRODUCTS (NOT USED)

PART 3 -- EXECUTION (NOT USED)

- END OF SECTION -

SECTION 01560 – TEMPORARY ENVIRONMENTAL CONTROLS

PART 1 -- GENERAL

1.01 EXPLOSIVES AND BLASTING

A. The use of explosives on the Work will not be permitted.

1.02 DUST ABATEMENT

A. The CONTRACTOR shall furnish all labor, equipment, and means required and shall carry out effective measures wherever and as often as necessary (as determined by the ENGINEER) to prevent its operation from producing dust in amounts damaging to property, cultivated vegetation, or domestic animals, or causing a nuisance to persons living in or occupying buildings in the vicinity. The CONTRACTOR shall be responsible for any damage resulting from any dust originating from its operations. The dust abatement measures shall be continued until the CONTRACTOR is relieved of further responsibility by the ENGINEER. No separate payment will be allowed for dust abatement measures and all costs thereof shall be included in the CONTRACTOR's bid price.

1.03 RUBBISH CONTROL

A. During the progress of the Work, the CONTRACTOR shall keep the site of the Work and other areas used by it in a neat and clean condition, and free from any accumulation of rubbish. The CONTRACTOR shall dispose of all rubbish and waste materials of any nature occurring at the Work site, and shall establish regular intervals of collection and disposal of such materials and waste. The CONTRACTOR shall also keep its haul roads free from dirt, rubbish, and unnecessary obstructions resulting from its operations. Disposal of all rubbish and surplus materials shall be off the site of construction in accordance with local codes and ordinances governing locations and methods of disposal, and in conformance with all applicable safety laws, and to the particular requirements of Part 1926 of the OSHA Safety and Health Standards for Construction.

1.04 SANITATION

A. Toilet Facilities: Fixed or portable chemical toilets shall be provided wherever needed for the use of employees. Toilets at construction job sites shall conform to the requirements of Part 1926 of the OSHA Standards for Construction.

B. Such facilities shall be made available when the first employees arrive on the Work, shall be properly secluded from public observation, and shall be constructed and maintained in suitable numbers and at such points and in such manner as may be required.

C. The CONTRACTOR shall maintain the sanitary facilities in a satisfactory and sanitary condition at all time and shall enforce their use. It shall rigorously prohibit the committing of nuisances on the site of the Work, on the lands of the COUNTY, or on adjacent property.

D. The COUNTY and the ENGINEER shall have the right to inspect any building or other facility erected, maintained, or used by the CONTRACTOR, to determine whether or not the sanitary regulations have been complied with.

E. Sanitary and Other Organic Wastes: The CONTRACTOR shall establish a regular daily collection of all sanitary and organic wastes. All wastes and refuse from sanitary facilities provided by the CONTRACTOR or organic material wastes from any other source related to the CONTRACTOR's operations shall be disposed of away from the site in a manner satisfactory to the ENGINEER and in accordance with all laws and regulations pertaining thereto.

1.05 CHEMICALS

A. All chemicals used during project construction or furnished for project operation, whether defoliant, soil sterilant, herbicide, pesticide, disinfectant, polymer, paint, fuel, solvent or reactant of other classification, shall show approval of either the U.S. Environmental Protection Agency or the U.S. Department of Agriculture. The handling, storage, use and disposal of all such chemicals and disposal of residues shall be in strict accordance with all applicable rules and regulations of Federal, State and local jurisdictional agencies and the printed instructions of the manufacturer and all regulatory requirements. Copies of antidote literature shall be kept at the storage site and at the CONTRACTOR's job site office. A supply of antidotes shall be kept at the CONTRACTOR's office.

1.06 NOISE CONTROL

A. Noise resulting from the CONTRACTOR's work shall not exceed the noise levels and other requirements stated in local ordinances. The CONTRACTOR shall be responsible for curtailing noise resulting from its operation. It shall, upon written notification from the ENGINEER or noise control officers, make any repairs, replacements, adjustments, additions and furnish mufflers when necessary to fulfill requirements.

1.07 EROSION ABATEMENT AND WATER POLLUTION

A. It is imperative that any CONTRACTOR dewatering operation not contaminate or disturb the environment of the properties adjacent to the Work. The CONTRACTOR shall, therefore, schedule and control its operations to confine all runoff water from disturbed surfaces, water from dewatering operations that becomes contaminated with silt, muck and other deleterious matter, fuels, oils, bitumens, calcium chloride, chemicals and other polluting materials.

B. The CONTRACTOR shall construct temporary silting basin(s) of adequate size and provide all necessary temporary materials, operations and controls including, but not limited to, filters, coagulants, screens, and other means necessary to attain the required discharge water quality.

C. The CONTRACTOR shall be responsible for providing, operating and maintaining materials and equipment used for conveying the clear water to the point of discharge. All pollution prevention procedures, materials, equipment and related items shall be operated and maintained until such time as the dewatering operation is discontinued. Upon the removal of the materials, equipment and related items, the CONTRACTOR shall restore the area to the condition prior to its commencing work.

D. The CONTRACTOR shall be responsible for acquiring all applicable permits for discharge of waters as necessary, except as may have otherwise been provided in other sections of these specifications.

1.08 PRECAUTIONS DURING ADVERSE WEATHER

A. During adverse weather, and against the possibility thereof, the CONTRACTOR shall take all necessary precautions so that the Work may be properly done and satisfactory in all respects. When required, protection shall be provided by use of tarpaulins, wood and building paper shelters, or other acceptable means. The CONTRACTOR shall be responsible for all changes caused by adverse weather.

B. The ENGINEER may suspend construction operations at any time when, in its judgment, the conditions are unsuitable or the proper precautions are not being taken, whatever the weather conditions may be, in any season.

1.09 HURRICANE PRECAUTIONS

A. As the schedule for this project coincides, in part, with the recognized South Florida hurricane season, the CONTRACTOR's attention is drawn to the possibility of hurricane conditions, or severe storm conditions, occurring at the job and plant site during the course of Contract work.

B. Within 30-days of the date of Notice-to-Proceed, the CONTRACTOR shall submit to the ENGINEER and CITY a Hurricane Preparedness Plan. The plan should outline the necessary measures which the CONTRACTOR proposes to perform at no additional cost to the CITY in case of a hurricane warning.

C. In the event of inclement weather, or whenever the ENGINEER shall direct, the CONTRACTOR shall, and will cause Sub-Contractors to protect carefully the Work and materials against damage or injury by reasons of failure on the part of the CONTRACTOR to so protect the Work. Such Work and materials so damaged shall be removed and replaced at the expense of the CONTRACTOR.

1. Hurricane Watch: Upon designation of a hurricane watch, CONTRACTORS shall be responsible for storing all loose supplies and equipment on the job site that may pose a danger. The CONTRACTOR shall backfill all open holes in preparation of inclement weather. In addition, the CONTRACTOR shall remove all bulkheads and plugs in pipelines that would impede drainage in the case of flooding. Structures that may be in danger of floatation shall be flooded. The CONTRACTOR shall also cooperate with CITY personnel in protecting other structures at the site.

2. Hurricane Warning: No mobile “temporary facility” under the control of the City or on City property, shall be staffed during a hurricane warning. CONTRACTOR facilities meeting these criteria shall comply. Reasonable steps shall be taken to protect all such facilities and their contents from damage and to avoid the facility causing damage to the surroundings.

1.10 PERIODIC CLEANUP AND BASIC SITE RESTORATION

A. During construction, the CONTRACTOR shall regularly remove from the site all accumulated debris and surplus materials of any kind which results from its operations. Unused equipment and tools shall be stored at the CONTRACTOR's yard or base of operations for the project.

B. The CONTRACTOR shall perform the cleanup work on a regular basis and as frequently as ordered by the ENGINEER. Basic site restoration in a particular area shall be accomplished immediately following the installation or completion of the required facilities in that area. Furthermore, such work shall also be accomplished, when ordered by the ENGINEER, if partially completed facilities must remain incomplete for some time period due to unforeseen circumstances.

C. Upon failure of the CONTRACTOR to perform periodic clean-up and basic restoration of the site to the ENGINEER's satisfaction, the ENGINEER may, upon five days prior written notice to the CONTRACTOR, employ such labor and equipment as it deems necessary for the purpose, and all costs resulting therefrom shall be charged to the CONTRACTOR and deducted from amounts of money that it may be due.

PART 2 -- PRODUCTS (NOT USED)

PART 3 -- EXECUTION (NOT USED)

- END OF SECTION -

SECTION 01590 - FIELD OFFICE, EQUIPMENT AND SERVICES

PART 1 -- GENERAL

1.01 THE REQUIREMENT

A. The Contractor shall provide field offices, equipment and services for its own use and the use of the Engineer as specified herein and shown on the Drawings.

1.02 RELATED WORK SPECIFIED ELSEWHERE

A. Section 01510 – Utilities and Services

1.03 SUBMITTALS

A. The Contractor shall submit shop drawings and other information as required to the Engineer for review in accordance with Section 01300 entitled "Submittals".

1.04 GENERAL FIELD OFFICE REQUIREMENTS

A. Contractor shall provide steps and platforms to permit entry to the offices. This work shall conform to the Florida Building Code and OSHA requirements.

B. Trailers shall be blocked up and hurricane straps installed conforming to the applicable building codes.

C. Contractor retains responsibility for procuring all necessary permits for the installation of the field offices at the location noted.

PART 2 -- PRODUCTS

2.01 CONTRACTOR'S FIELD OFFICE

A. Contractor's Field Office: Contractor may provide a field office for itself at its discretion.

PART 3 -- EXECUTION

3.01 UTILITY SERVICES

A. Potable water will be made available for connection by the Contractor, who shall pay all costs for water for the Contractor's field office over the duration of the project. The Contractor shall furnish, install, test, and have inspected all piping, valves, and flow meter for connection with the City's potable water services.

B. Power: The Contractor shall provide all necessary power required for its operations under the Contract, and shall provide and maintain all temporary power lines required to perform Work in a safe and satisfactory manner. The Contractor shall pay all costs for installation, maintenance and removal for the work and power.

C. Sanitary Services: The Contractor shall provide one totally enclosed water closet and lavatory. The Contractor shall furnish all piping, power and equipment required to convey sanitary waste and discharge into the Plant's sanitary system.

- END OF SECTION -

SECTION 01600 - MATERIALS AND EQUIPMENT

PART 1 -- GENERAL

1.01 THE REQUIREMENT

A. The word "Products," as used herein is defined to include purchased items for incorporation into the Work, regardless of whether specifically purchased for project or taken from CONTRACTOR's stock of previously purchased products.

B. The word "Materials," is defined as products which must be substantially cut, shaped, worked, mixed, finished, refined, or otherwise fabricated, processed, installed, or applied to form units of Work.

C. The word "Equipment" is defined as products with operational parts, regardless of whether motorized or manually operated, and particularly including products with service connections (wiring, piping, and other like items).

D. Definitions in this Section are not intended to negate the meaning of other terms used in Contract Documents, including "specialties," "systems," "structure," "finishes," "accessories," "furnishings," “special construction," and similar terms, which are self-explanatory and have recognized meanings in the construction industry.

1.02 QUALITY ASSURANCE

A. Source Limitations: To the greatest extent possible for each unit of Work, the CONTRACTOR shall provide products, materials, or equipment of a singular generic kind from a single source.

B. Compatibility of Options: Where more than one choice is available as options for CONTRACTOR's selection of a product, material, or equipment, the CONTRACTOR shall select an option which is compatible with other products, materials, or equipment already selected. Compatibility is a basic general requirement of product/material selections.

1.03 DESIGN

A. Equipment and appurtenances shall be designed in conformity with the ASME, AIEE, NEMA and other generally accepted applicable standards and shall be of rugged construction and sufficient strength to withstand all stresses which may occur during fabrication, testing, transportation, installation and all conditions of operation. All bearings and moving parts shall be adequately protected by bushings or other acceptable means against wear, and provision shall be made for adequate lubrication by readily accessible devices. Details shall be designed for appearance as well as utility. Protruding members, joints, corners, gear covers, etc., shall be finished in appearance.

B. All exposed welds on machinery shall be ground smooth and the corners of structural shapes shall be rounded or chamfered.

1.04 PRODUCT DELIVERY-STORAGE-HANDLING

A. The CONTRACTOR shall deliver, handle, and store products in accordance with supplier's written recommendations and by means and methods that will prevent damage, deterioration, and loss including theft. Delivery schedules shall be controlled to minimize long-term storage of products at site and overcrowding of construction spaces. In particular, the CONTRACTOR shall provide delivery/installation coordination to ensure minimum holding or storage times for products recognized to be flammable, hazardous, easily damaged, or sensitive to deterioration, theft, and other sources of loss.

1.05 TRANSPORTATION AND HANDLING

A. Products shall be transported by methods to avoid product damage and shall be delivered in undamaged condition in supplier's unopened containers or packaging, dry.

B. The CONTRACTOR shall provide equipment and personnel to handle products, materials, and equipment including those provided by OWNER, by methods to prevent soiling and damage.

C. The CONTRACTOR shall provide additional protection during handling to prevent marring and otherwise damaging products, packaging, and surrounding surfaces.

1.06 STORAGE AND PROTECTION

A. Products shall be stored in accordance with supplier's written instructions, with seals and labels intact and legible. Sensitive products shall be stored in weather-tight enclosures and temperature and humidity ranges shall be maintained within tolerances required by supplier's written instructions.

B. For exterior storage of fabricated products, they shall be placed on sloped supports above ground. Products subject to deterioration shall be covered with impervious sheet covering; ventilation shall be provided to avoid condensation.

C. Loose granular materials shall be stored on solid surfaces in a well-drained area and shall be prevented from mixing with foreign matter.

D. Storage shall be arranged to provide access for inspection. The CONTRACTOR shall periodically inspect to assure products are undamaged and are maintained under required conditions.

E. Storage shall be arranged in a manner to provide access for maintenance of stored items and for inspection.

1.07 MAINTENANCE OF STORAGE

A. Stored products shall be periodically inspected on a scheduled basis.

B. The CONTRACTOR shall maintain a log of inspections and make said log available to the ENGINEER on request.

C. The CONTRACTOR shall verify that storage facilities comply with supplier's product storage requirements.

D. The CONTRACTOR shall verify that supplier-required environmental conditions are maintained continually.

E. The CONTRACTOR shall verify that surfaces of products exposed to the elements are not adversely affected and that any weathering of finishes is acceptable under requirements of Contract Documents.

1.08 MAINTENANCE OF EQUIPMENT STORAGE

A. For mechanical and electrical equipment in long-term storage, the CONTRACTOR shall provide a copy of the supplier's service instructions to accompany each item, with notice on enclosed instruction shown on exterior of package.

B. Equipment shall be serviced on a regularly scheduled basis, and a log of services shall be maintained and submitted as a record document to the ENGINEER.

1.09 LUBRICANTS

A. During testing and prior to acceptance, the CONTRACTOR shall furnish all lubricants necessary for the proper lubrication of all equipment furnished under this Contract.

1.10 SPECIAL TOOLS

A. For each type of equipment furnished by it, the CONTRACTOR shall provide a complete set of all special tools (including calibration and test equipment) which may be necessary for the adjustment, operation, maintenance and disassembly of such equipment.

B. Special tools shall be delivered at the same time as the equipment to which they pertain. The CONTRACTOR shall properly store and safeguard such special tools until completion of the Work, at which time they shall be delivered to the OWNER.

1.11 PROTECTION AGAINST ELECTROLYSIS

A. Where dissimilar metals are used in conjunction with each other, suitable insulation shall be provided between adjoining surfaces so as to eliminate direct contact and any resultant electrolysis. The insulation shall be bituminous impregnated felt, heavy bituminous coatings, nonmetallic separators or washers, or other acceptable materials.

1.12 FASTENERS

A. All necessary bolts, anchor bolts, nuts, washers, plates and bolt sleeves shall be furnished by the CONTRACTOR in accordance herewith.

B. Bolts shall have suitable washers and, where so required, their nuts shall be hexagonal.

C. All bolts, anchor bolts, nuts, washers, plates, and bolt sleeves shall be Type 316 stainless steel unless otherwise specifically indicated or specified.

D. Unless otherwise specified, stud, tap, and machine bolts shall be of the best quality refined bar iron. Hexagonal nuts of the same quality of metal as the bolts shall be used.

1.13 SALVAGED AND EXCAVATED MATERIALS

A. In the absence of special provisions in other Sections of the Specifications, salvage materials, equipment or supplies that occur are the property of the OWNER and shall be cleaned and stored as directed by the ENGINEER.

B. All excavated materials needed for backfilling operation shall be stored on site. Where additional area is needed for stockpiling, it shall be obtained by the CONTRACTOR.

PART 2 -- PRODUCTS (NOT USED)

PART 3 -- EXECUTION (NOT USED)

- END OF SECTION -

SECTION 01660 - EQUIPMENT TESTING AND STARTUP

PART 1 -- GENERAL

1.01 GENERAL

A. Equipment testing and startup are requisite to satisfactory completion of the contract and, therefore, shall be completed within the Contract time.

B. As construction of each system of the project enters the final stages of completion, the CONTRACTOR shall, in accordance with the requirements set forth in the Contract Documents, attend to the following items:

1. Complete all Punch List items required by the ENGINEER prior to startup.

2. Schedule equipment manufacturer's visits to site.

3. Calibration of instruments and controls.

4. Perform required testing adjusting and balancing of project components.

5. Complete all Punch List items that result from testing.

6. Schedule and coordinate training and testing activities.

7. Furnish skilled personnel from manufacturer’s and suppliers during training and testing activities.

8. Furnish operation and maintenance training for OWNER’s personnel.

9. Successfully demonstrate reliable operation of project systems.

1.02 DEFINITIONS

A. Facility Startup: Includes putting Project in operating order, cleaning, adjusting and balancing equipment, initial operation (startup) of equipment item, operating equipment, starting systems, operation of systems, testing of equipment and systems, completing required punch list items, and demonstration and verification of the completed facility as a unit.

B. Functional Test: A test or tests in the presence of the ENGINEER and/or OWNER to demonstrate that the installed equipment or system meets manufacturer’s installation and adjustment requirements and other requirements specified including, but not limited to, noise, vibration, alignment, speed, proper operation of electrical, mechanical and information and control equipment, thrust restraint, proper rotation, and initial servicing.

C. System Performance Test: A test performed in the presence of the ENGINEER and/or OWNER after satisfactory completion of required functional testing, to demonstrate and

confirm that the equipment and/or system meet the specified performance requirements for a specified minimum operation period without significant interruption. System performance testing shall not begin until the following are completed:

1. The CONTRACTOR has submitted written test reports, installation reports, and performance affidavits as required in the Contract Documents.

2. The CONTRACTOR has completed all punch list items.

3. The CONTRACTOR has completed all functional testing.

D. Operation Period: The operation period for each system Performance Test shall be 7 consecutive calendar days without significant interruption (unless defined otherwise in specific equipment sections).

E. Significant Interruption: May include any of the following events:

1. Failure of CONTRACTOR to maintain qualified onsite startup personnel as scheduled.

2. Failure to meet specified performance for more than two consecutive hours.

3. Failure of any critical equipment unit, system, or subsystem that is not satisfactorily corrected within five hours after failure.

4. Failure of noncritical unit, system, or subsystem that is not satisfactorily corrected within eight hours after failure.

5. As may be determined by ENGINEER.

F. System: The overall process, or a portion thereof, that performs a specific function. A system may consist of two or more subsystems as well as two or more types of equipment. The “System” shall be as determined by the ENGINEER.

G. Training: The services provided by the CONTRACTOR and his equipment supplier to ensure that the OWNER’s staff is completely prepared to operate and maintain the contract facilities. Training shall include classroom instruction, as well as “hands-on” field / equipment demonstration, operation, and maintenance. Equipment / contract facilities shall be 100 percent “operational” (as defined by the ENGINEER) during training activities.

1.03 CONTRACTOR’S RESPONSIBILITIES

A. The CONTRACTOR shall designate and furnish one or more persons to be responsible for coordinating and expediting CONTRACTOR’s facility startup, testing, and training duties. The person or persons shall be present during Facility Startup, Functional Testing, and Training meetings and shall be available at all times during the Facility Startup and training period. In addition, the person or persons shall be “on call” (available to assist the OWNER) at all times during the System Performance Testing.

B. The CONTRACTOR shall provide the services of an experienced and authorized representative of the supplier of each item of equipment (excluding minor items of equipment specifically exempted by the ENGINEER in writing), who shall visit the site of the Work and inspect, check, adjust if necessary, and approve the equipment installation. In each case, the CONTRACTOR shall arrange to have the supplier's representative revisit the job site as often as necessary until any and all trouble is corrected and the equipment installation and operation are satisfactory to the ENGINEER.

C. The CONTRACTOR shall require that each supplier's representative furnish to the ENGINEER a written report addressed to the OWNER, and copied to the ENGINEER, certifying that the equipment has been properly installed and lubricated, is in accurate alignment, is free from any undue stress imposed by connecting piping or anchor bolts, has been operated satisfactorily under the complete range of, including but not limited to, full-load, conditions, is ready for operation and the OWNER's operating personnel have been instructed in the operation, maintenance and lubrication of the equipment.

D. The CONTRACTOR shall furnish all personnel, power, water, chemicals, fuel, oil, grease, and all other necessary equipment, facilities, and services required for conducting the tests.

E. The CONTRACTOR shall coordinate startup, testing, and training activities with OWNER / ENGINEER in advance and in writing.

1.04 SUBMITTALS

A. Completed Manufacturer's Certificate of Proper Installation for each equipment item specified for the project. Submit prior to beginning functional testing procedures.

B. Test Schedules and Test Plans: Eight (8) copies of functional and system performance test schedules and plans for equipment, units, and systems shall be submitted to the ENGINEER, in accordance with the Section entitled "Submittals" at least 30 days prior to start of related testing. Startup shall not commence without prior approval of the test plan. The test plan shall contain the following at a minimum:

1. A schedule of all testing to be conducted.

2. A brief description of the testing to be performed.

3. Testing criteria.

4. Checklists and procedures for performing each test.

5. Sample forms for the collection of test data.

6. Sample test results documentation.

7. Requirements for other parties.

C. Test Reports: Functional and performance testing reports in a format acceptable to the ENGINEER, shall be furnished in accordance with the Section entitled “Submittals”. Test reports shall be submitted prior to project closeout in accordance with the requirements of the Section entitled “Project Closeout”.

D. Training Schedules and Plan: Eight (8) copies of written training schedule and written training plan shall be submitted to the ENGINEER, in accordance with the Section entitled “Submittals” at least 30 days prior to start of related operation and maintenance training. The training plan shall contain the following at a minimum:

1. A schedule of all training to be conducted. The training schedule shall be adjusted as deemed necessary by the OWNER, to allow full participation by the supplier’s representative, OWNER’s personnel and as needed if the operability of the system being trained on is interrupted for any reason. This may require training during three separate shifts.

2. A brief description of the training to be performed.

3. Sample training materials and handouts.

4. Qualifications of the supplier's representative performing the training.

5. Training agenda for each major equipment item shall be prepared. As a minimum, the agenda shall include but not limit to the following items:

   a. General description of the equipment item

   b. Start-up procedure

   c. Shutdown procedure

   d. Operation and control description

   e. Adjustment and trouble-shooting

   f. Maintenance

E. Written Notification: Any CONTRACTOR activity that may impact operation of existing facilities shall be confirmed in writing at least 48 hours in advance of initiation of that activity. This requirement is in addition to the 30-day advance submittal of plans to more clearly confirm coordination efforts required. This notification shall include, as minimum:

1. Scheduled date and time (start, finish, duration) of CONTRACTOR’s activity.

2. Brief description of activity.

3. Brief description of any OWNER activity that is required to coordination with CONTRACTOR’s activity (such as shutdown of a unit process or system, power supply, etc.).

PART 2 – PRODUCTS

2.01 WATER

A. The OWNER will supply potable water to the CONTRACTOR's construction field office.

B. The OWNER will supply potable water to the CONTRACTOR for flushing and disinfection of the temporary high service pumps and the proposed high service pumps.

C. The OWNER will supply potable water for startup, testing and operation of the temporary high service pumps and the proposed high service pumps.

D. Provision of the water described herein will be free of charge.

2.02 FUEL

A. This project requires operating the OWNER's outdoor diesel driven pump at certain times during the construction sequence. The OWNER will supply the fuel for operating is existing outdoor diesel driven pump.

B. Fuel for operating the OWNER'S existing outdoor diesel driven pump be provided free of charge.

2.03 DISINFECTION

A. The CONTRACTOR shall furnish all required disinfectant chemicals, equipment, labor, materials and tools required to disinfect the temporary and proposed piping, valves and equipment that contact the potable water.

2.04 ELECTRICITY

A. The OWNER will provide electricity - free of charge - for checkout, start-up and testing of the temporary high service pumps and the proposed high service pumps.

B. The CONTRACTOR shall be responsible for arranging for electrical service to its construction field office. The CONTRACTOR shall pay for electricity supplied to its field office.

PART 3 -- EXECUTION

3.01 PREPARATION FOR EQUIPMENT FUNCTIONAL TESTING

A. The following shall be completed prior to the CONTRACTOR initiating the Functional Testing:

1. Conduct (or have previously conducted, whichever is appropriate) all field inspections and tests as defined in the individual specification sections, installation checks, disinfection, hydrostatic tests, other preliminary or initial tests, and

necessary corrections required, to demonstrate that individual components of the Work have been properly erected and found to operate in accordance with the Contract Documents, so that they can be utilized for their intended purposes.

2. Remove all electrical jumpers, bypasses or other items connected to the equipment which are not intended to remain in the facility and are not required by the specifications. Demonstrate that each component is operating under its own control as designated.

3. Confirm that all electrical circuits are energized in the automatic position, that valves and gates are set to their normal position and that the flow path through the Work is unobstructed.

4. All identification tagging and pipe identification shall be complete prior to initiation of functional testing.

5. All spare parts and special tools shall be delivered to OWNER prior to initiation of function testing.

6. Notification by CONTRACTOR of equipment readiness for testing.

7. Acceptable testing plan.

8. Acceptable Operation and Maintenance Manuals.

9. Receipt of Manufacturer's Certificate of Proper Installation.

10. Adequate completion of Work adjacent to, or interfacing with, equipment to be tested.

11. Availability and acceptability of manufacturer's representative, when specified, to assist in testing of respective equipment.

12. Satisfactory fulfillment of other specified manufacturers' responsibilities.

3.02 FUNCTIONAL TESTING

A. General:

1. Begin testing at a time mutually agreed upon by the OWNER and/or ENGINEER, manufacturer's representative(s), and CONTRACTOR.

2. Notify in writing OWNER, ENGINEER, and manufacturer's representative at least 14 days prior to scheduled date of functional tests.

3. Separate items of equipment demonstrated to function properly during subsystem testing may require no further functional test if documentation of subsystem testing is acceptable to ENGINEER.

4. Conduct functional test until each individual component item or system has achieved a minimum of 2 continuous hours of satisfactory operation; unless a longer length of time is specified elsewhere in the Technical Specifications for specific equipment items. The longer period of time shall apply. Demonstrate all operational features and controls function during this period while in automatic modes.

5. If, in ENGINEER's opinion, each system meets the functional requirements specified, such system will be accepted as conforming for purposes of advancing to performance testing phase, if required. Complete and initial appropriate section of the Manufacturer's Certificate of Proper Installation. This Certificate shall be retained by the ENGINEER.

6. If, in ENGINEER's opinion, functional test results do not meet requirements specified, the systems will be considered as nonconforming.

3.03 SYSTEM PERFORMANCE TESTING

A. General:

1. The startup of each facility and performance testing is a highly complex operation requiring the combined technical expertise of the CONTRACTOR, suppliers, subcontractors, the ENGINEER, and the OWNER. The CONTRACTOR shall provide the effective and advance coordination of all parties necessary for the successful startup.

2. System performance testing shall not commence until Punch List items are adequately addressed to the ENGINEER's satisfaction, and the equipment or system meets functional tests specified.

3. All defects in materials or workmanship that appear during the system performance test shall be immediately corrected by the CONTRACTOR. Time lost for equipment repairs, wiring corrections, control point settings, or other reasons which actually interrupt the startup may, at the discretion of the ENGINEER, be justifiable cause for extending the system performance test Operation Period.

4. Should a significant interruption as defined previously in this Section be incurred, the test shall be restarted from the beginning, unless the failure is of two hours or less in duration, or considered minor by the ENGINEER. The CONTRACTOR shall bear all costs associated with restarting the test period. Restart of the test period shall be solely at the ENGINEER's discretion.

B. System Performance Testing:

1. The duration of the system performance test shall be as defined in Article 1.02 of this Section, or as defined elsewhere in the Documents, whichever is longer.

2. The CONTRACTOR shall provide technical representatives of all equipment manufacturers, system suppliers, subcontractors, etc. for as-needed service to address mechanical malfunctions.

3. The CONTRACTOR shall furnish and coordinate the services of technical representatives of all equipment manufacturers to perform the testing services outlined in Contract Documents and the testing plan. The technical representatives of all equipment manufacturers shall perform startup testing and prepare test reports.

4. During the System Performance Testing, the CONTRACTOR shall assist the OWNER in directing the OWNER's personnel performing routine operating functions for the new facility.

5. The CONTRACTOR shall also be responsible for furnishing mechanics, labor, materials, and equipment that may be required to repair any malfunctions to equipment furnished and installed under the scope of this project.

6. Upon successful completion of the performance test complete, date and initial the appropriate section of the Manufacturer's Certificate of Proper Installation. This form shall be retained by the ENGINEER.

3.04 O&M TRAINING

A. The training period shall not begin until successful completion of all system Functional Testing. The training period may be concurrent with the Performance Testing period; however, shall not be deemed complete, or shall be considered interrupted if there is a Significant Interruption of the Performance Testing. If a Significant Interruption occurs, training shall be repeated and/or continued at the OWNER's option, at the time that the Performance Testing restarts. Also, training shall not begin until all O&M Manuals, specified in the Section entitled "Submittals", have been accepted by the ENGINEER.

B. During the training period, the CONTRACTOR shall provide the services of an experienced representative of the supplier of each item of equipment (excluding minor items of equipment specifically exempted by the ENGINEER in writing), who shall visit the site and instruct the OWNER's operating and maintenance personnel in correct operation and maintenance procedures. It is noted that training requirements are specified throughout the Contract Documents. The instruction shall demonstrate start-up, operation, control, adjustment, trouble-shooting, servicing, maintenance, and shutdown of each item of equipment. Training shall include classroom and field / hands-on (with operational equipment) instruction. Training shall be provided only while the respective representative's equipment is fully operational. On-site instruction shall be given by qualified persons who have been made familiar in advance with the equipment and systems at the project site.

C. Training shall be scheduled and coordinated by the CONTRACTOR. Training hours shall be arranged in writing with the OWNER at least 14 days in advance of the scheduled training with a subsequent written confirmation at least 48 hours in advance.

- END OF SECTION –

MANUFACTURER'S CERTIFICATE OF PROPER INSTALLATION

TO ENGINEER:_____

PROJECT: _____ PROJECT NO: _____

OWNER: _____

EQPT/SYSTEM: _____ SPEC SECTION: _____

EQPT SERIAL NO: _____ EQPT TAG NO: _____

I hereby certify that the above-referenced equipment/system has been:

PROPER INSTALLATION CHECKLIST:

Installed in accordance with Manufacturer's recommendations.

- ☐ Inspected, checked, and adjusted.
- ☐ Serviced with proper initial lubricants.
- ☐ Electrical and mechanical connections meet quality and safety standards.
- ☐ All applicable safety equipment has been properly installed.

FUNCTIONAL TEST CHECKLIST:

- ☐ Has been functionally tested, and meets specified requirements.

Functional Test Date: _____ Start Time: _____ End Time: _____

PERFORMANCE TEST CHECKLIST:

- ☐ Has been performance tested, meets specified requirements, and is ready for startup.

Performance Test Start Date: _____ End Date: _____

NOTE: *Attach functional test and performance test documentation from manufacturer.*

Comments:

I, the undersigned Manufacturer's Representative, hereby certify that I am (i) a duly authorized representative of the manufacturer, (ii) empowered by the manufacturer to inspect, and operate his equipment and (iii) authorized to make recommendations required to assure that the equipment furnished by the manufacturer is complete and operational, except as may be otherwise indicated herein. I further certify that all information contained herein is true and accurate.

Date: _____ , 20 ____

Manufacturer: _____

By Manufacturer's Authorized Representative: _____
Authorized Signature

SECTION 01700 - PROJECT CLOSEOUT

PART 1 -- GENERAL

1.01 THE REQUIREMENT

A. Final Cleaning

1. At the completion of the work, the CONTRACTOR shall remove all rubbish from and about the site of the work, and all temporary structures, construction signs, tools, scaffolding, materials, supplies and equipment which he or any of his Subcontractors may have used in the performance of the work. CONTRACTOR shall broom clean paved surfaces and rake clean other surfaces of grounds.

2. CONTRACTOR shall thoroughly clean all materials, equipment and structures; all marred surfaces shall be touched up to match adjacent surfaces; dirty filters and burned out lights replaced as required; all glass surfaces cleaned and floors cleaned and polished so as to leave work in a clean and new appearing condition.

3. CONTRACTOR shall maintain cleaning until project, or portion thereof, is occupied by the OWNER.

B. Lubrication Survey

1. A lubrication survey, made by a lubricant supply firm, subject to the approval of the OWNER shall be provided and paid for by the CONTRACTOR.

2. The lubrication survey shall list all equipment, the equipment manufacturer's lubrication recommendations, and an interchangeable lubricants tabulation standardizing and consolidating lubricants whenever possible.

3. The CONTRACTOR shall supply all lubricants, applicators and labor for lubricating the equipment, in accordance with manufacturer's recommendations, for field testing and prior to final acceptance. A supply of required lubricants sufficient for start-up and one year of operation shall also be supplied by the CONTRACTOR.

4. Ten (10) copies of the approved lubrication survey shall be furnished to the ENGINEER prior to final acceptance.

C. Spare Parts and Special Tools

1. As soon as practicable after approval of the list of equipment, the CONTRACTOR shall furnish spare parts data for each different item of equipment listed. The data shall include a complete list of parts and supplies, with current unit prices and source or sources of supply.

2. CONTRACTOR shall also furnish a list of parts, and supplies that are either normally furnished at no extra cost with the purchase of the equipment or specified to be furnished as part of the Contract and a list of additional items recommended by the manufacturer to assure efficient operation for a period of one-hundred and twenty (120) days for the particular installation.

3. All parts shall be securely boxed and tagged, and clearly marked on the box and individually for identification as to the name of manufacturer or supplier, applicable equipment, part number, description and location in the equipment. All parts shall be protected and packaged for a shelf life of at least ten (10) years.

4. Unless otherwise specified in the Contract Documents, the CONTRACTOR shall, as a minimum, furnish at no additional cost to the OWNER with each piece of equipment, one (1) complete set, or the number of sets called for in the Technical Specifications (whichever is greater), of suitably marked special tools and appliances which may be needed to adjust, operate, maintain, or repair the equipment.

5. The CONTRACTOR shall submit, for approval by the ENGINEER, a complete list of the special tools and appliances to be furnished. Such tools and appliances shall be furnished in approved painted steel cases properly labeled and equipped with good grade cylinder locks and duplicate keys.

D. Equipment Start-Up Services

1. Equipment start-up period, for the training of plant personnel, shall begin after satisfactory completion and acceptance of the field tests and coincidentally with the certified date of substantial completion for the part of the work for which the equipment is included. If the equipment is not covered by a certificate of substantial completion for a part of the work, the period shall begin upon substantial completion of the project.

2. During the equipment start-up period the CONTRACTOR shall furnish, at no additional cost to the OWNER the services of factory trained representatives of the equipment manufacturers for the equipment designated in the Specifications to:

   a. Assist in the start-up and operations of the equipment.

   b. Assist in the training of plant personnel, designated by the OWNER in the proper operation and maintenance of the equipment.

3 The OWNER shall:

   a. Provide the necessary plant personnel to be instructed in the operation and maintenance of the equipment. The OWNER's personnel shall operate all equipment.

   b. Pay for all fuel, power and chemicals consumed beyond quantities specified in the Contract Documents. The CONTRACTOR shall pay for

fuel, power, and chemicals consumed up to the date of "certified substantial completion" except as otherwise specified herein.

4. CONTRACTOR shall be available to promptly repair all work during the start-up period so as to cause minimum disruption to the total plant operation.

5. Upon completion of a minimum of ten (10) consecutive and continuous days of satisfactory operation, or the number of days called for in the Technical Specifications, the OWNER will assume operation and operating cost of the equipment. If the equipment malfunctions during this start-up period, the start-up period will be repeated until satisfactory operation is achieved.

6. In the event a system, equipment or component proves defective or is unable to meet specified performance criteria, the CONTRACTOR shall replace the defective item and the minimum one (1) year guarantee period, or the guarantee period called for in the Technical Specifications shall start after satisfactory replacement, testing and acceptance of the item along with the completion of all other pre-requisites as required bt the Contract Documents.

E. Final Cleanup; Site Rehabilitation

1. Before finally leaving the site, the CONTRACTOR shall wash and clean all exposed surfaces which have become soiled or marked, and shall remove from the site of work all accumulated debris and surplus materials of any kind which result from his operation, including construction equipment, tools, sheds, sanitary enclosures, etc. The CONTRACTOR shall leave all equipment, fixtures, and work, which he has installed, in a clean condition. The completed project shall be turned over to the OWNER in a neat and orderly condition.

2. The site of the work shall be rehabilitated or developed in accordance with other sections of the Specifications and the Drawings. In the absence of any portion of these requirements, the CONTRACTOR shall completely rehabilitate the site to a condition and appearance equal or superior to that which existed just prior to construction, except for those items whose permanent removal or relocation was required in the Contract Documents or ordered by the OWNER.

F. Final Inspection

1. Final cleaning and repairing shall be so arranged as to be finished upon completion of the construction work. The CONTRACTOR will make his final cleaning and repairing, and any portion of the work finally inspected and accepted by the ENGINEER shall be kept clean by the CONTRACTOR, until the final acceptance of the entire work.

2. When the CONTRACTOR has finally cleaned and repaired the whole or any portion of the work, he shall notify the ENGINEER that he is ready for final inspection of the whole or a portion of the work, and the ENGINEER will thereupon inspect the work. If the work is not found satisfactory, the ENGINEER will order further cleaning, repairs, or replacement.

3. When such further cleaning or repairing is completed, the ENGINEER, upon further notice, will again inspect the work. The "Final Payment" will not be processed until the CONTRACTOR has complied with the requirements set forth, and the ENGINEER has made his final inspection of the entire work and is satisfied that the entire work is properly and satisfactorily constructed in accordance with the requirements of the Contract Documents.

G. Project Close Out

1. As construction of the project enters the final stages of completion, the CONTRACTOR shall, in concert with accomplishing the requirements set forth in the Contract Documents, attend to or have already completed the following items as they apply to his contract:

   a. Scheduling equipment manufacturers' visits to site.

   b. Required testing of project components.

   c. Scheduling start-up and initial operation.

   d. Scheduling and furnishing skilled personnel during initial operation.

   e. Correcting or replacing defective work, including completion of items previously overlooked or work which remains incomplete, all as evidenced by the ENGINEER's "Punch" Lists.

   f. Attend to any other items listed herein or brought to the CONTRACTOR's attention by the ENGINEER.

2. Just before the ENGINEER's Certificate of Substantial Completion is issued, the CONTRACTOR shall accomplish the cleaning and final adjustment of the various building components as specified in the Specifications and as follows:

   a. Clean all glass and adjust all windows and doors for proper operation.

   b. Clean all finish hardware after adjustment for proper operation.

   c. Touch up marks or defects in painted surfaces and touch up any similar defects in factory finished surfaces.

   d. Wax all resilient flooring materials.

   e. Remove bitumen from gravel stops, fascias, and other exposed surfaces.

   f. Remove all stains, marks, fingerprints, soil, spots, and blemishes from all finished surfaces, tile, stone, brick, and similar surfaces.

3. In addition, and before the Certificate of Substantial Completion is issued, the CONTRACTOR shall submit to the ENGINEER (or to the OWNER if indicated) certain records, certifications, etc., which are specified elsewhere in the Contract Documents. A partial list of such items appears below, but it shall be the CONTRACTOR's responsibility to submit any other items which are required in the Contract Documents:

   a. Test results of project components.

   b. Performance Affidavits for equipment.

   c. Certification of equipment or materials in compliance with Contract Documents.

   d. Operation and maintenance instructions or manuals for equipment.

   e. One set of neatly marked-up record drawings showing as-built changes and additions to the work under his Contract.

   f. Any special guarantees or bonds (Submit to OWNER).

4. The CONTRACTOR's attention is directed to the fact that required certifications and information under Item 3 above, must actually be submitted earlier in accordance with other Sections of the Specifications.

PART 2 -- PRODUCTS

(NOT USED)

PART 3 -- EXECUTION

(NOT USED)

- END OF SECTION -

SECTION 02100 - TEMPORARY EROSION AND SEDIMENTATION CONTROL

PART 1 -- GENERAL

1.01 THE REQUIREMENT

A. The Contractor shall design, provide, maintain and remove temporary erosion and sedimentation controls as necessary.

B. Temporary erosion controls may include, but are not limited to, mulching, netting, and watering, on site surfaces and spoil and borrow are surfaces and providing interceptor ditches at ends of berms and at those locations which will ensure that erosion during construction will be either eliminated or maintained within acceptable limits as established by the Owner.

C. Temporary sedimentation controls include, but are not limited to: silt dams, traps, barriers and appurtenances at the foot of sloped surfaces which will ensure that sedimentation pollution will be either eliminated or maintained within acceptable limits as established by the Owner.

D. Contractor shall provide effective temporary erosion and sediment control measures during construction or until final controls become effective.

E. If required by law, the CONTRACTOR shall obtain permits required by the National Pollutant Discharge Elimination System (NPDES) Stormwater Permitting program for construction activity, as required by Florida Administrative Code (F.A.C.) Chapter 62-621 and administered by the Florida Department of Environmental Protection (FDEP).

F. The CONTRACTOR shall be for responsible for implementation, maintenance and inspection of stormwater pollution prevention control measures in accordance with F.A.C. Chapter 62-621 including, but not limited to, erosion and sediment control, stormwater management plans, waste collection and disposal, off-site vehicle tracking, and other practices specified herein or required by permitting agencies. The stormwater pollution prevention control measures shall include protection of offsite public and private storm sewer facilities potentially impacted during construction. Stormwater facilities include streets, inlets, pipes, ditches, swales, canals, culverts, control structures, and detention/retention areas.

G. The CONTRACTOR shall prepare and submit to permitting agencies with jurisdiction a Stormwater Pollution Prevention Plan (SWPPP) when required by FDEP.

1.02 REFERENCE DOCUMENTS

A. “Guidelines for Erosion and Sediment Control, Planning and Implementation” and “Processes, Procedures and Methods to Control Pollution Resulting from all Construction Activity”, published by the United States Environmental Protection Agency.

B. State of Florida “Erosion and Sediment Control, Designer and Reviewer Manual” prepared for the Florida Department of Transportation and Florida Department of Environmental Protection.

1.03 SUBMITTALS

A. Submit a copy of the approved SWPPP for temporary erosion and sedimentation control.

PART 2 -- PRODUCTS

2.01 GENERAL

A. Provide all required erosion and sediment control products necessary for compliance with permit conditions.

PART 3 -- EXECUTION

3.01 GENERAL

A. Comply with permit conditions.

- END OF SECTION –

SECTION 02210 - SITE GRADING

PART 1 -- GENERAL

1.01 THE REQUIREMENT

A. The CONTRACTOR shall perform grading Work within the limits, elevations and grades indicated on the Drawings and as specified herein.

1.02 RELATED WORK SPECIFIED ELSEWHERE

A. Section 02222 – Excavation and Backfill for Utilities

1.03 QUALITY CONTROL

A. The site shall be graded to the required elevations. Spot elevations are shown on the Drawings and the finished surfaces shall be uniformly sloped between these locations.

B. Suitable excavated material shall be used in the formation of embankments. The CONTRACTOR shall provide all additional fill material required to complete the embankments.

PART 2 – PRODUCTS (NOT USED)

PART 3 -- EXECUTION

3.01 GRADING AND COMPACTION

A. Fill material shall be placed in lifts not to exceed 8-inches and compacted to a density of not less than 95 percent of maximum density at optimum moisture as determined by ASTM D 1557. Fill material shall be within plus or minus 2 percentage points of optimum moisture content.

3.02 FINE GRADING

A. After structures, bases and pavements are completed and the yard piping trenches backfilled, the disturbed areas of the site shall be fine graded. All construction debris, regardless of size, shall be removed. The completed surface shall be shaped and sloped to drain away from the structures. The completed surface shall be within 0.1 foot of the elevations shown on the Drawings, unless otherwise accepted by the ENGINEER. Minor adjustments to line and grade may be required as the Work progresses in order to satisfy field conditions.

- END OF SECTION -

SECTION 02222 - EXCAVATION AND BACKFILL FOR UTILITIES

PART 1 - GENERAL

1.01 THE REQUIREMENT

A. Excavate, grade and backfill as required for underground piping systems and appurtenances as shown on the Drawings and specified herein.

1.02 REFERENCE SPECIFICATIONS, CODES, AND STANDARDS

A. Codes: All codes, as referenced herein, are specified in Section entitled "Reference Standards".

B. Commercial Standards:

ASTM D 422	Method for Particle-Size Analysis of Soils.
ASTM D 698	Test Methods for Moisture-Density Relations of Soils and Soil-Aggregate Mixtures, Using 5.5-lb (2.49-kg) Rammer and 12-in (304.8-mm) Drop.
ASTM D 1556	Test Method for Density of Soil in Place by the Sand-Cone Method.
ASTM D 1557	Test Methods for Moisture-Density Relations of Soils and Soil-Aggregate Mixtures Using 10-lb (4.54-kg) Rammer and 18-in (457-mm) Drop.
ASTM D 2419	Test Method for Sand Equivalent Value of Soils and Fine Aggregate.
ASTM D6938	Standard Test Method for In-Place Density and Water Content of Soil and Soil-Aggregate by Nuclear Methods (Shallow Depth)

1.03 SUBMITTALS

A. General: Submit information and samples to the Engineer for review as specified herein in accordance with Section entitled "Submittals".

B. Dewatering: The Contractor shall submit to the Engineer its proposed methods of handling trench water and the locations at which the water will be disposed of. Methods shall be acceptable to the Engineer before starting the excavation.

C. Bedding and Backfill Materials: The Contractor shall notify the Engineer of the off-site sources of bedding and backfill materials, and submit to the Engineer a representative sample weighing approximately 50 lbs. The sample shall be delivered to a location on site determined by the Engineer.

D. Sheeting System: Drawings of the sheeting system and design computations shall be submitted to the Engineer; however, the review of these drawings shall in no way relieve the Contractor of the responsibility to provide a safe and satisfactory sheeting and shoring system. Sheeting and shoring shall be designed by the Contractor, and the proposed design shall be sealed by a Professional Engineer registered in the State of Florida. If the Engineer is of the opinion that at any point sufficient or proper supports have not been provided, it may order additional supports put in at the Contractor's expense.

E. Dewatering Permits: If the quantity or nature of water withdrawn requires approval/permits from regulatory agencies, the Contractor shall procure such permits at its expense and submit copies to the Engineer before commencing the work.

1.04 QUALITY CONTROL

A. An independent testing laboratory will be retained by the Owner to do appropriate testing as described in the Section entitled "Quality Control". The Contractor shall schedule its work so as to permit a reasonable time for testing before placing succeeding lifts and shall keep the laboratory informed of its progress. A minimum of 48 hours of notice shall be provided to the testing laboratory to mobilize its activities.

1.05 SUBSURFACE INFORMATION

A. The Contractor shall be responsible for anticipating groundwater conditions and shall provide positive control measures as required. Such measures shall ensure stability of excavations, groundwater pressure control, prevention of tanks, pipes, and other structures from being lifted by hydrostatic pressures, and avoiding the disturbance of subgrade bearing materials.

1.06 TRENCH SAFETY ACT COMPLIANCE

A. The Contractor by signing and executing the contract is, in writing, assuring that it will perform any trench excavation in accordance with the Florida Trench Safety Act, Section 553.60 et. seq.. The Contractor has further identified the separate item(s) of cost of compliance with the applicable trench safety standards as well as the method of compliance as noted in the "Bid Forms" Section of the Contract front-end documents.

B. The Contractor acknowledges that this cost is included in the applicable items of the Proposal and Contract and in the Grand Total Bid and Contract Price.

C. The Contractor is, and the Owner and Engineer are not, responsible to review or assess the Contractor's safety precautions, programs or costs, or the means, methods, techniques or technique adequacy, reasonableness of cost, sequences or procedures of any safety precaution, program or cost, including but not limited to, compliance with any and all requirements of Florida Statute Section 553.60 et. seq. cited as the "Trench Safety Act". The Contractor is, and the Owner and Engineer are not, responsible to determine if any safety or safety related standards apply to the project, including but not limited to, the "Trench Safety Act".

1.07 PROTECTION OF PROPERTY AND STRUCTURES

A. The Contractor shall, at its own expense, sustain in place and protect from direct or indirect injury, all pipes, poles, conduits, walls, buildings, and all other structures, utilities, and property in the vicinity of its Work. Such sustaining shall be done by the Contractor. The Contractor shall take all risks attending the presence or proximity of pipes, poles, conduits, walls, buildings, and all other structures, utilities, and its Work. It shall be responsible for all damage, and assume all expenses, for direct or indirect injury and damage, caused by its Work, to any such pipe, structures, etc., or to any person or property, by reason of injury to them, whether or not such structures, etc., are shown on the Drawings.

B. Barriers shall be placed at each end of all excavations and at such places as may be necessary along excavations to warn all pedestrian and vehicular traffic of such excavations. Barricades with flashing lights shall also be placed along excavation from sunset each day to sunrise of the next day until such excavation is entirely refilled, compacted, and paved. All excavations shall be barricaded where required to meet OSHA, local and Federal Code requirements, in such a manner to prevent persons from falling or walking into any excavation within the site fenced property limits.

PART 2 - PRODUCTS

2.01 BEDDING MATERIAL

A. Bedding materials shall be furnished from acceptable off-site sources. The Contractor shall notify the Engineer of the sources of each material at least ten calendar days prior to the anticipated use of the materials.

B. Screened gravel shall be used as bedding material for small diameter pipe (less than 24 inches). Screened gravel shall also be used as bedding material for fiberglass, PVC, HDPE or other plastic pipe when installation is in the wet. Screened gravel shall consist of hard, durable particles of proper size and graduation, and shall be free from organic material, wood, trash, sand, loam, clay, excess fines, and other deleterious materials. The gravel shall be graded within the following limits:

Sieve Size	Percent Finer by Weight
1 inch	100
3/4 inch	99
1/2 inch	65
No. 4	2

C. Crushed stone shall be used for bedding of 24 inch and larger diameter pipe. Crushed stone shall also be used when the trench is within the water table for all types of piping except fiberglass, PVC, HDPE or other plastic pipe. Crushed stone shall consist of hard, durable, subangular particles of proper size and gradation, without clay, fines, and other deleterious materials. The stone shall be graded within the following limits:

Sieve Size	Percent Finer by Weight
5/8 inch	100

1/2 inch	40 – 100
3/8 inch	15 – 45
No. 10	0 – 5

D. Sand shall be used for bedding polyvinyl chloride, fiberglass, HDPE and other plastic pipe when installed under dry trench conditions. Sand shall be graded sand with 100 percent passing a 3/8-inch sieve and not more than 5 percent passing a No. 200 sieve.

2.02 SELECT BACKFILL

A. Select Backfill: Select backfill shall be clean sandy material passing through a 3/4-inch sieve as select backfill material.

B. Any excess structural fill shall be disposed of off-site by the Contractor.

2.03 GENERAL BACKFILL

A. All other backfill (general backfill) placed above the select backfill shall pass through a 6-inch ring. General backfill shall contain no more than 10 percent organics. General backfill used under roadways shall be compatible with the materials and compaction specified under the corresponding pavement specifications in this Project.

PART 3 - EXECUTION

3.01 EXCAVATION

A. The Contractor shall perform all excavation of every description and of whatever substance encountered, to the dimensions, grades and depths shown on the Drawings, or as required for a proper installation. All excavations shall be made by open cut and in accordance with the Trench Safety Act. All existing utilities such as pipes, poles and structures shall be carefully located, supported and protected from injury; in case of damage, they shall be restored at the Contractor's expense.

B. Pipe trenches for piping shall be excavated to a width within the limits of the top of the pipe and the trench bottom so as to provide a clearance on each side of the pipe barrel, measured to the face of the excavation, or sheeting if used, of 8 inches to 18 inches. Where the pipe size exceeds 12 inches, the clearance shall be from 12 inches to 18 inches. All pipe trenches shall be excavated to a level where suitable material is reached, a minimum of 8 inches below the pipe barrel or that will allow for a minimum of 36 inches of covering unless otherwise indicated on the Drawings.

C. Ladders or steps shall be provided for and used by workmen to enter and leave trenches.

D. Excavated unsuitable material shall be removed from the site and disposed of by the Contractor. Materials removed from the trenches shall be stored and in such a manner that will not interfere unduly with traffic on public roadways and sidewalks and shall not be placed on private property. In congested areas, such materials that cannot be stored

adjacent to the trench or used immediately as backfill shall be removed to other convenient places of storage acceptable to the Owner at the Contractor's expense.

E. Excavated material that is suitable for use as backfill shall be used in areas where sufficient material is not available from the excavation. Suitable material in excess of backfill requirements shall be disposed off-site at the Contractor's expense.

3.02 SHEETING AND BRACING

A. The Contractor shall furnish, place and maintain sheeting and bracing to support sides of the excavation as necessary to provide safe working conditions in accordance with OSHA requirements, and to protect pipes, structures and other Work from possible damage. Where wood sheeting or certain designs of steel sheeting are used, the sheeting shall be cut off at a level of 2 feet above the top of the installed pipe and that portion below the level shall be left in place. If interlocking steel sheeting is used, it may be removed providing removal can be accomplished without disturbing the bedding, pipe or alignment of the pipe. Any damage to the pipe bedding, pipe or alignment of the constructed utility caused by the removal of sheeting shall be cause for rejection of the affected portion of the work. The Owner may permit sheeting to be left in place at the request and expense of the Contractor or the Owner may order it in writing to leave in place, for the prevention of damage to structures or property. Payment for sheeting ordered to remain in place shall be paid for at a negotiated price.

B. If the Engineer is of the opinion that at any point sufficient or proper supports, have not be provided, it may order additional supports put in at the Contractor's expense. The Contractor shall be responsible for the adequacy of all sheeting used and for all damage resulting from sheeting and bracing failure or from placing, maintaining and removing it.

3.03 REMOVAL OF WATER

A. General: It is a basic requirement of these Specifications that excavations shall be free from water before pipe or structures are installed.

B. The Contractor shall provide pumps, and other appurtenant equipment necessary to remove and maintain water at such a level as to permit construction in a dry condition. The Contractor shall continue dewatering operations until backfilling has progressed to a sufficient depth over the pipe to prevent flotation or movement of the pipe in the trench or so that it is above the water table. If at any point during the dewatering operation it is determined that fine material is being removed from the excavation sidewalls, the dewatering operation shall be stopped. If any of the subgrade or underlying material is disturbed by movement of groundwater, surface water, or any other reason, it shall be replaced at the Contractor's expense with crushed stone or gravel.

C. The Contractor shall use dewatering systems that include automatic starting devices, and standby pumps that will ensure continuous dewatering in the event of an outage of one or more pumps.

D. Disposal: Water from the trenches and excavation shall be disposed of in such a manner as will not cause injury to public health, to public or private property, to the Work completed

or in progress, to the surface of the streets, cause any interference with the use of the same by the public, or cause pollution of any waterway or stream. The Contractor shall submit its proposed methods of handling trench water and locations at which the water will be disposed of to the Engineer for review and shall receive acceptance before starting the excavation. Disposal to any surface water body will require silt screens to prevent any degration in the water body. The Contractor shall have responsibility for acquiring all necessary jurisdictional permits for disposal.

3.04 TRENCH STABILIZATION

A. No claims or additional payment will be considered for cost incurred in the stabilization of trench bottoms which are rendered soft or unstable as a result of construction methods, such as improper or inadequate sheeting, dewatering or other causes. In no event shall pipe be installed when such conditions exist and the Contractor shall correct such conditions so as to provide proper bedding or foundations for the proposed installation at no additional cost to the Owner before placing the pipe or structures.

3.05 PIPE BEDDING IN DRY TRENCHES

A. Pipe trenches shall be excavated as described in Article 3.01. The resulting excavation shall be backfilled with acceptable pipe bedding material, up to the level of the centerline of the proposed pipe barrel. This backfill shall be tamped and compacted to provide a proper bedding for the pipe and shall then be shaped to receive the pipe. Bedding shall be provided under the branch of all fittings to furnish adequate support and bearing under the fitting.

B. Any over excavation below the levels required for installation of the pipe shall be backfilled with acceptable bedding material, tamped, compacted and shaped to provide proper support for the proposed pipe, at the Contractor's expense.

3.06 BACKFILL

A. The Contractor shall not backfill trenches until the piping has been inspected and tested in accordance with the Section entitled "Pipeline Testing and Disinfection".

B. Pipelines: Pipeline trenches shall be backfilled to a level 12 inches above the top of the pipe with select backfill. When placed in the dry, such material shall be placed in 9-inch layers. Only hand operated mechanical compacting equipment shall be used within six inches of the installed pipe.

C. After the select backfill has been placed as specified above, and after all excess water has completely drained from the trench, general backfilling of the remainder of the trench may proceed. General backfill shall be placed in horizontal layers, the depth of which shall not exceed the ability of the compaction equipment employed, and in no event shall exceed a depth of 12 inches. Each layer shall be moistened, tamped, puddled, rolled or compacted.

D. Manholes and Vaults: Any excavation below the levels required for the proper construction of manholes or vaults shall be filled with Class B concrete. The use of earth, rock, sand or other materials for this purpose will not be permitted.

3.07 COMPACTION AND DENSITIES

A. Compaction of backfill shall be 98 percent of the maximum density where the trench is located under structures or paved areas, and 95 percent of the maximum density elsewhere. Methods of control and testing of backfill construction are:

1. Maximum density of the material in trenches shall be determined by ASTM D 1557.

2. Field density of the backfill material in place shall be determined by ASTM D 1556 or D 2922.

B. Testing: Laboratory and field density tests, which in the opinion of the Engineer are necessary to establish compliance with the compaction requirements of these Specifications, shall be ordered by the Engineer. The Contractor shall coordinate and cooperate with the testing laboratory. The testing program will be implemented by the Engineer establishing depths and locations of tests. Modifications to the program will be made as job conditions change.

C. Trench backfill which does not comply with the specified densities, as indicated by such tests, shall be reworked and recompacted until the required compaction is secured, at no additional cost to the Owner. The costs for retesting such Work shall be paid for by the Contractor.

3.08 ADDITIONAL EXCAVATION AND BACKFILL

A. Where organic material, such as roots, muck, or other vegetable matter, or other material which, in the opinion of the Engineer, will result in unsatisfactory foundation conditions, is encountered below the level of the proposed pipe bedding material, it shall be removed to a depth of two feet below the outside bottom of the pipe or to a greater depths as directed by the Engineer and removed from the site. Sheeting shall be installed if necessary to maintain pipe trenches within the limits identified by the Engineer. The resulting excavation shall be backfilled with suitable backfill material, placed in 12-inch layers, tamped and compacted up to the level of the bottom of the proposed pipe bedding material. Sufficient compaction of this material shall be performed to protect the proposed pipe against settlement. Lean concrete may be used in lieu of backfill when pipe installation is in the wet or at the Contractor's option.

B. Additional excavation (more than two feet below the pipe or foundation slab) shall be performed when ordered by the Engineer. Where organic or other material is encountered in the excavation, the Contractor shall bring the condition to the attention of the Engineer and obtain its determination as to whether or not the material will require removal, prior to preparing the pipe bedding. The excavation of material up to a depth of two feet below the outside bottom incidental items of construction and the Work shall be done at no additional cost to the Owner. Where ordered by the Engineer, excavation greater than

two feet below the pipe, backfill and additional sheeting, will be compensated by the Owner.

3.09 RESTORATION OF EXISTING SURFACES

A. Restore all grassed areas disturbed by the trenching operations by re-sodding.

- END OF SECTION -

SECTION 02224 - EXCAVATION AND BACKFILL FOR STRUCTURES

PART 1 - GENERAL

1.01 THE REQUIREMENT

A. Furnish all labor, equipment and materials required to complete all work associated with excavation, dewatering, backfill, foundation and backfill stone, embankments, stockpiling topsoil and any excess suitable material in designated areas, in place compaction of embankments, backfill and subgrades beneath foundations and roadways, excavation support, disposing from the site all unsuitable materials, providing erosion and sedimentation control grading, site grading and preparation of pavement and structure subgrade, and other related and incidental work as required to complete the work shown on the Drawings and specified herein.

B. All excavations shall be in conformity with the lines, grades, and cross sections shown on the Drawings or established by the Engineer.

C. It is the intent of this Specification that the Contractor conducts the construction activities in such a manner that erosion of disturbed areas and off-site sedimentation be absolutely minimized.

1.02 RELATED WORK SPECIFIED ELSEWHERE

A. Requirements of related work are included in Division 1 and Division 2 of these Specifications.

1.03 REFERENCE SPECIFICATIONS, CODES, AND STANDARDS

A. Without limiting the generality of the other requirements of the Specifications, all work herein shall conform to the applicable requirements of the following documents. All referenced Specifications, codes, and standards refer to the most current issue available at the time of Bid.

1. Florida Department of Transportation Standard Specifications for Road and Bridge Construction, latest edition.

2. American Society for Testing and Materials (ASTM):

ASTM C 127	Test for Specific Gravity and Absorption of Coarse Aggregate
ASTM C 136	Test for Sieve Analysis of Fine and Coarse Aggregates
ASTM D 422	Particle Size Analysis of Soils
ASTM D 423	Test for Liquid Limit of Soils
ASTM D 424	Test for Plastic Limit and Plasticity Index of Soils

ASTM C 535	Test for Resistance to Degradation of Large Size Coarse Aggregate by Abrasion and Impact in the Los Angeles Machine
ASTM D 698	Standard Method of Test for the Moisture - Density Relations of Soils Using a 5.5 lb. (2.5 kg) Rammer and a 12-inch (305 mm) Drop
ASTM D1556	Test for Density of Soil in Place by the Sand-Cone Method
ASTM D1557	Test for Moisture-Density Relations of Soils and Soil Aggregate Mixtures Using 10-lbs. (4.5 kg) Rammer and 18-inch (457 mm) Drop
ASTM D2049	Test Method for Relative Density of Cohesionless Soils
ASTM D2167	Test for Density of Soil in Place by the Rubber-Balloon Method
ASTM D2216	Test for Laboratory Determination of Water (Moisture) Content of Soil, Rock, and Soil Aggregate Mixtures
ASTM D2487	Test for Classification of Soils for Engineering Purposes
ASTM D6938	Standard Test Method for In-Place Density and Water Content of Soil and Soil-Aggregate by Nuclear Methods (Shallow Depth)

1.04 SUBSURFACE CONDITIONS

A. Subsurface information in the area of the proposed structures is not available.

B. A separate geotechnical report is included as a reference for information purposes. The report identifies properties below grade and also offers recommendations for foundation design, primarily for use of the Engineer. The recommendations shall not be construed as requirements of the Contract unless specifically referenced by the Contract Documents.

C. The OWNER and/or the Engineer will not assume responsibility for variations of sub-soil quality or conditions at locations other than places shown and at the time the geotechnical investigation was made. The Contractor shall examine the site and review the available geotechnical boring logs or undertake its own subsurface investigation prior to submitting his bid, taking into consideration all conditions that may affect his work.

D. The Contractor shall satisfy himself as to the character and amount of different soil materials, groundwater and the subsurface conditions to be encountered in the work to be performed. Information and data, when furnished, are for the Contractor's general information. However, it is expressly understood that any interpretation or conclusion drawn there from is totally the responsibility of the Contractor. Engineer and OWNER assume no liability for the accurateness of the data reported. No claim for extra compensation or for extension of time will be allowed on account of subsurface conditions inconsistent with Contractor’s assumptions.

E. Attention is directed to the fact that there may be water pipes, storm drains and other utilities located in the area of proposed excavation. Locate existing underground utilities in areas of work. Test pits and hand excavation in critical areas will be required prior to initiating work. Perform all repairs to same in the event that excavation activities disrupt service.

F. All existing utilities including piping, electrical conduits, electrical duct banks and telephone cables that are shown on the Contract Documents to be relocated, shall be relocated prior to initiating earthwork. Excavation and backfill for relocation of existing utilities shall conform to the requirements of Section 02222 entitled "Excavation and Backfill for Utilities". The Contractor shall coordinate relocation of utilities with utility companies having jurisdiction in the area. Should unknown or incorrectly identified piping or other utilities be encountered during excavation, the Contractor shall consult the OWNER and the Engineer immediately for directions.

G. The Contractor shall cooperate with the OWNER and utility companies in keeping respective services and facilities in operation.

1.05 SUBMITTALS

A. In accordance with the procedures and requirements set forth in Section 01300 - Submittals, the Contractor shall submit the following:

1. Name and location of all material suppliers.

2. Certificate of compliance with the standards specified above for each source of each material.

3. List of disposal sites for waste and unsuitable materials and all required permits for use of those sites.

4. Plans and cross sections of open cut excavations showing side slopes and limits of the excavation at grade.

5. Construction drawings and structural calculations for any types of excavation support required. Drawings and calculations shall be signed and sealed by a currently registered Professional Engineer in the State of Florida.

6. Monitoring plan and pre-construction condition inspection and documentation of all adjacent structures, utilities, and roadways near proposed installation of excavation support systems.

7. Dewatering procedures: The Contractor shall submit his proposed methods of handling groundwater and the locations at which the water will be disposed of. Methods shall be acceptable to the Engineer before starting and excavating. Contractor shall submit plans showing the methods and location of dewatering and discharge. The drawings shall include a sufficient number of detailed sections to clearly illustrate the Scope of Work. The Drawings showing all of the above information, including calculations, shall be prepared by a qualified Professional

Engineer registered in the State of Florida, and shall bear its seal and signature. If required by regulatory agencies, a copy of the dewatering permit shall be submitted.

8. The Contractor shall notify the Engineer of the off-site or on-site sources of structural fill and submit to the Engineer a representative sample weighing approximately 50 lbs. The sample shall be delivered to a designated location on site.

9. Prior to any earthwork, the Contractor shall submit a sieve analysis of the proposed structural fill to Engineer for review and approval.

10. The Contractor shall not place any foundation reinforcement steel or formwork until excavations have been tested for compaction.

11. The Contractor shall apply for and obtain all necessary permits for dewatering as necessary. Contractor shall be responsible for all permit fees.

1.06 QUALITY CONTROL

A. All soils testing shall be performed by an independent testing laboratory retained by the CONTRACTOR as specified in Section 01400 entitled “Quality Control”. The Contractor shall schedule its Work so as to permit a reasonable time for testing before placing succeeding lifts of backfill and shall keep the laboratory informed of its progress. In the event any test shows the work is not in conformance with these Contract Documents, the cost of any subsequent testing to show conformance shall be borne by the Contractor. All test results shall be sent directly to the Engineer.

1.07 PRODUCT HANDLING

A. Soil and rock material shall be excavated, transported, placed, and stored in a manner so as to prevent contamination, segregation and excessive wetting. Materials which have become contaminated or segregated will not be permitted in the performance of the work and shall be removed from the site.

1.08 GROUNDWATER

A. The Contractor shall be responsible for anticipating groundwater conditions and shall provide positive control measures as required. Such measures shall ensure construction in the dry, stability of excavations, groundwater pressure control, prevention of tanks, pipes, and other structures from being lifted by hydrostatic pressures, and avoiding the disturbance of subgrade bearing materials.

1.09 USE OF EXPLOSIVES

A. The use of explosives for excavation work is strictly prohibited on this project.

1.10 PROTECTION OF PROPERTY AND STRUCTURES

A. The Contractor shall, at its own expense, sustain in place and protect from direct or indirect injury, all pipes, poles, conduits, walls, buildings, and all other structures, utilities, and property in the vicinity of its work. The Contractor shall take all risks attending the presence of proximity of pipes, poles, conduits, walls, buildings, and all other structures, utilities, and property in the vicinity of its work. He shall be responsible for all damage, and assume all expenses, for direct or indirect injury and damage, caused by its work, to any such pipe, structures, etc., or to any person or property, by reason of injury to them, whether or not such structures, etc., are shown on the Drawings.

PART 2 -- PRODUCTS

2.01 SELECT FILL

A. Soils from the excavations meeting requirements stipulated herein with the exceptions of topsoil and organic material may be used as select fill for backfilling, constructing embankments, reconstructing existing embankments, and as structural subgrade support. All fill material used for embankment construction shall be provided by the Contractor from any excess suitable on-site or from off-site sources, all subject to review by the Engineer prior to use. The Contractor must determine the volume of material required for the site.

B. Select fill used for embankment construction shall be non-cohesive, non-plastic, granular mixture of local sand and limerock, shall be free from vegetation, organic material or muck, and shall not contain more than 8 percent material by weight which passes the No. 200 sieve. Broken concrete shall not be used in the fill. Fill material for embankment construction containing limerock shall have sufficient sand to fill the voids in the limerock, and no individual rocks or pieces or hard material that will not pass a 6-inch diameter ring shall be used in the fill; except that the upper 4-inches of all backfill or fills shall not contain any rock or hard material that will not pass a 3-inch diameter ring.

C. Select fill used for backfilling shall either be material as described in Paragraph B or a granular soil material with a maximum Plasticity Index (PI) of 6. Backfill against walls shall not contain any rock larger than ½-inches.

D. Select fill used under structures (structural fill) shall be furnished from off-site or on-site sources as required. Structural fill material shall be clean sand or sand and limerock free from vegetation, organic material, muck, or other deleterious matter. Not more than 10 percent by weight shall pass the No. 200 sieve and shall have a Unified Soil Classification System designation of GP, GW, GP-GM, GW-GM, SP, SW, SP-SM, or SW-SM. All rock shall pass through a 3-inch diameter ring. Broken Portland cement or asphaltic concrete will not be considered an acceptable fill material. Unsuitable Fill Material: Classified as A-2-4, A-2-5, A-2-6, A-2-7, A-4, A-5, A-6, A-7, and A-8 in accordance with AASHTO Designation M 145. Peat and other highly organic soils are also unsuitable as structural fill.

E. Regardless of material used as select fill, materials shall be compacted at a moisture content satisfactory to the Engineer, which shall be approximately that required to produce the maximum density except that the moisture content shall not be more than 2% below nor more than 2% above the optimum moisture content for the particular material tested in accordance with the ASTM D1557.

F. Where excavated material does not meet requirements for select fill, Contractor shall furnish off-site borrow material meeting the specified requirements herein.

2.02 CLEAN SAND

A. Clean sand for use in backfilling shall be furnished from off-site or on-site sources as required. Material shall be clean sand free from vegetation, organic material, muck, or other deleterious material. Not more than 10 percent by weight shall pass the No. 200 sieve and shall have a classification of A-3 in accordance with AASHTO Designation M 145.

2.03 TOPSOIL

A. Topsoil shall be considered the surface layer of soil and sod, suitable for use in seeding and planting. It shall contain no mixture of refuse or any material toxic to plant growth.

2.04 GEOTEXTILES

A. The Contractor shall provide geotextiles as indicated on the Drawings and specified herein.

2.05 CRUSHED STONE

A. Crushed Stone: Crushed stone shall consist of hard, durable, subangular particles of proper size and gradation, and shall be free from organic material, wood, trash, sand, loam, clay, excess fines, and other deleterious materials. Crushed stone shall conform to the requirements of ASTM C 33, Size Number 57, graded within the following limits:

Sieve Size	Percent Finer by Weight
1 ½ inch	100
1 inch	95 to 100
½ inch	25 to 80
No. 4	0 to 10
No. 8	0 to 5

B. Crushed stone shall be carefully placed and spread to a minimum depth of 6 inches unless indicated otherwise on the Drawings. Final grades and locations shall be as indicated on the Drawings.

2.06 WEED CONTROL FABRIC

A. General: All gravel beds and areas of crushed stone shown on the Drawings shall include an underline of weed control fabric as specified herein.

B. Manufacturer and Product, or Equal:

Manufacturer	Product

DeWitt Company	Roc-Kloth ™
Easy Gardener Products, Inc.	Pro WeedBlock

PART 3 -- EXECUTION

3.01 STRIPPING OF TOPSOIL

A. In all areas to be excavated, filled, paved, or graveled, the topsoil shall be stripped to its full depth and shall be deposited in storage piles on the site, at locations designated by the Engineer, for subsequent reuse. Remove all tree stumps, concentration of roots and other deleterious materials. Topsoil shall be kept separated from other excavated materials and shall be piled free of roots and other undesirable materials. Areas shall be cleared, grubbed, and stripped an area at least 10 feet beyond the maximum outside perimeter of structures and at least 5 feet beyond paved areas.

3.02 EXCAVATION

A. Unsuitable material within structure footprints is expected. Highly organic soils (peat or muck), weak silty materials, asphalt and concrete shall be removed from all foundation areas. In addition, all sandy silt zones shall be completely removed from mat foundation and footing areas. Unsuitable material within structure footprints shall be over-excavated and backfilled with structural fill.

B. All excavation shall be made in such manner, and to such widths, as will give ample room for properly constructing and inspecting the structures they are to contain. As a minimum, excavations shall be carried 5-feet outside slab or footing limits or by one foot for each foot excavated below the bearing grade of the mat or footing, whichever is less, unless noted otherwise. A 12-inch over-excavation and subsequent backfill shall be performed at all structure footings.

C. All material excavated, regardless of its nature or composition, shall be classified as UNCLASSIFIED EXCAVATION. Excavation shall include the removal of all soil, rock, and weathered rock, rocks of all types, boulders, conduits, pipe, and all other obstacles encountered and shown to be removed within the limits of excavation shown on the Drawings or specified herein. The cost of excavation shall be included in the Lump Sum Bid Price and no additional payment will be made for the removal of obstacles encountered within the excavation limits shown on the Drawings and specified herein.

D. Excavated unsuitable material shall be removed from the site and disposed of by the Contractor.

E. All suitable material removed in the excavation shall be used as far as practicable in the formation of embankments, subgrades, and shoulders, and at such other places as may be indicated on the Drawings or indicated by the Engineer. No excavation shall be wasted except as may be permitted by the Engineer. Refer to the drawings for specific location and placement of suitable excavated materials in the formation of embankments, backfill, and structural and roadway foundations. THE ENGINEER WILL DESIGNATE MATERIALS THAT ARE UNSUITABLE. The Contractor shall furnish off-site disposal

areas for the unsuitable material and shall dispose of unsuitable material at such areas. Where suitable materials containing excessive moisture are encountered above grade in cuts, the Contractor shall construct above grade ditch drains prior to the excavation of the cut material when in the opinion of the Engineer such measures are necessary to provide proper construction.

F. All excavations shall be made in the dry and in such a manner and to such widths as will give ample room for properly constructing and inspecting the structures and/or piping they are to contain and for such excavation support, pumping and drainage as may be required. Excavation shall be made in accordance with the grades and details shown on the Drawings and as specified herein.

G. Excavation slopes shall be flat enough to avoid slides that will cause disturbance of the subgrade or damage of adjacent areas, and if required to protect the safety of workmen, the general public, this or other work or structure, or excavation walls, the excavation shall be properly sheeted and braced for conditions encountered and OSHA requirements. The Contractor shall intercept and collect surface runoff both at the top and bottom of cut slopes. The intersection of slopes with natural ground surfaces, including the beginning and ending of cut slopes, shall be uniformly rounded as shown on the Drawings or as may be indicated by the Engineer. Concurrent with the excavation of cuts the Contractor shall construct intercepting berm ditches or earth berms along and on top of the cut slopes at locations shown on the Drawings or designated by the Engineer. All slopes shall be finished to reasonably uniform surfaces acceptable for seeding and mulching operations. No rock or boulders shall be left in place, which protrude more than 1 foot within the typical section cut slope lines, and all rock cuts shall be cleaned of loose and overhanging material. All protruding roots and other objectionable vegetation shall be removed from slopes. The Contractor shall be required to submit plans of open-cut excavation for review by the Engineer before approval is given to proceed.

H. The bottom of all excavations for structures and pipes shall be examined by the Engineer for bearing value and the presence of unsuitable material. If, in the opinion of the Engineer, additional excavation is required due to the low bearing value of the subgrade material, or if the in-place soils are soft, yielding, pumping and wet, or if the limestone formation has been exposed and solution features in the form of slots or chimneys are found, the Contractor shall remove such material to the required width and depth and replace it with material acceptable to the Engineer. No payment will be made for subgrade disturbance caused by inadequate dewatering or improper construction methods.

I. All cuts shall be brought to the grade and cross section shown on the Drawings, or established by the Engineer, prior to final inspection and acceptance by the Engineer.

J. Slides and over-breaks which occur due to negligence, carelessness or improper construction techniques on the part of the Contractor shall be removed and disposed of by the Contractor as indicated by the Engineer at no additional cost to the OWNER. If grading operations are suspended for any reason whatsoever, partially completed cut and fill slopes shall be brought to the required slope and the work of seeding and mulching or other required erosion and sedimentation control operations shall be performed.

K. Where the excavation exposes sludge, sludge contaminated soil or other odorous materials, the Contractor shall cover such material at the end of each workday with a minimum of 6-inches and a maximum of 24-inches of clean fill. The work shall be an odor abatement measure and the material shall be placed to the depth deemed satisfactory by the Engineer for this purpose.

L. The Contractor shall ensure that its excavation work does not adversely affect the bearing capacity of the structural subsurface. Also, the Contractor shall proceed with foundation work immediately after excavation work and as expeditiously as possible so as to minimize any potential for subsurface disturbance due to environmental factors, adverse weather, etc. The Contractor shall also take all necessary precautions to protect its work from potential adverse impacts. Where excavated areas are disturbed by subsequent operations or adverse weather, scarify surface, reshape, fill as required and compact to required density.

3.03 UNAUTHORIZED EXCAVATION

A. Excavation Work carried outside of the Work limits required by the Contract Documents shall be at the Contractor's expense, and shall be backfilled by the Contractor at its own expense with suitable material, as directed by the Engineer. Where, in the judgment of the Engineer, such over-excavation requires use of lean concrete or crushed stone, the Contractor, at its expense shall furnish and place such materials.

3.04 EXCAVATION SUPPORT

A. The Contractor shall furnish, place, and maintain such excavation support which may be required to support sides of excavation or to protect pipes and structures from possible damage and to provide safe working conditions. Excavation for deep structures shall be sufficient to provide a clearance between their outer surfaces and the face of the excavation, excavation support, or bracing, of not less than 3 feet. Materials encountered in the excavation which have a tendency to slough or flow into the excavation, undermine the bank, weaken the overlying strata, or are otherwise rendered unstable by the excavation operation shall be retained by an excavation support, stabilization, grouting or other acceptable methods. If the Engineer is of the opinion that at any point sufficient or proper supports have not been provided, it may order additional supports put in at the expense of the Contractor. The Contractor shall be responsible for the adequacy of all supports used and for all damage resulting from failure of support system or from placing, maintaining and removing it.

B. Selection of and design of any proposed excavation support systems is exclusively the responsibility of the Contractor. Excavation support shall comply with all applicable OSHA requirements. Contractor shall submit drawings and calculations on proposed systems sealed by a Professional Engineer currently registered in the State of Florida.

C. The Contractor shall exercise caution in the installation and removal of supports to insure that excessive or unusual loadings are not transmitted to any new or existing structure. The Contractor shall promptly repair at its expense any and all damage that can be reasonably attributed to installation or removal of excavation support system.

D. Contractor shall monitor movement in the excavation support systems as well as movement at adjacent structures, utilities and roadways near excavation supports. Contractor shall submit a monitoring plan developed by the excavation support design engineer. All pre-construction condition assessment and documentation of adjacent structures on-site and off-site shall be performed by the Contractor. If any sign of distress such as cracking or movement occurs in any adjacent structure, utility or roadway during installation of supports, subsequent excavation, service period of supports, subsequent backfill and construction, or removal of supports, Engineer shall be notified immediately. Contractor shall be exclusively responsible for any damage to any roadway, structure, utility, pipes, etc. both on-site and off-site, as a result of its operations.

E. All excavation supports shall be removed upon completion of the work, except as indicated herein, provided its removal will not jeopardize existing or new pipes or structures. The Engineer may permit supports to be left in place at the request and expense of the Contractor. Any excavation supports left in place shall be cut off at least two (2) feet below the finished ground surface or as directed by the Engineer.

3.05 PROTECTION OF SUBGRADE

A. To minimize the disturbance of bearing materials and provide a firm foundation, the Contractor shall comply with the following requirements:

1. Use of heavy rubber-tired construction equipment shall not be permitted on the final subgrade unless it can be demonstrated that drawdown of groundwater throughout the entire area of the structure is at least 3 feet below the bottom of the excavation (subgrade). Even then, the use of such equipment shall be prohibited should subgrade disturbance result from concentrated wheel loads.

2. Subgrade soils disturbed through the operations of the Contractor shall be excavated and replaced with compacted select fill or crushed stone at the Contractor's expense as indicated by the Engineer.

3. The Contractor shall provide positive protection against penetration of frost into materials below the bearing level during work in winter months. This protection can consist of a temporary blanket of straw or salt hay covered with a plastic membrane or other acceptable means.

3.06 PROOF-ROLLING

A. Proof-rolling of in-place soils shall be performed on the subgrade of all structures and all areas that will support pavements or select fill. Surface area to be proof-rolled shall extend 5 feet out from the footing or foundation perimeter. After stripping of topsoil, excavation to subgrade and prior to placement of fills, the exposed subgrade shall be carefully inspected by probing and testing as needed. Any topsoil or other organic material still in place, frozen, wet, soft, or loose soil, and other undesirable materials shall be removed. The exposed subgrade shall be proofrolled to check for pockets of soft material hidden beneath a thin crust of better soil and until no further vertical settlement of the surface is visually discernable. Vibratory rollers for proofrolling shall not be used within 50 feet of existing structures. Within 50 feet of existing structures, proofrolling shall be performed

with a track-mounted bulldozer or a vibratory roller in the static mode. Any unsuitable materials thus exposed shall be removed and replaced with an approved compacted material. Groundwater shall be maintained at least 30 inches below the work area.

3.07 DEWATERING

A. The Contractor shall do all dewatering as required for the completion of the work. Procedures for dewatering proposed by the Contractor shall be submitted to the Engineer for review prior to any earthwork operations. Disposal of water to any surface water body will require silt screens. All water removed by dewatering operations shall be disposed of in accordance with the Florida Air and Water Pollution Control Act. The Contractor is responsible for obtaining any dewatering permits as required by regulatory agencies.

B. The dewatering system shall be of sufficient size and capacity as required to control groundwater or seepage to permit proper excavation operations, embankment construction and reconstruction, subgrade preparation, and to allow concrete to be placed in a dry condition except where authorized tremie concrete construction work is shown or permitted. The system shall include a sump system or other equipment, appurtenances and other related earthwork necessary for the required control of water, and shall include automatic starting devices and standby pumps that will ensure continuous dewatering in the event of an outage of one or more pumps. The Contractor shall drawdown groundwater to at least 3 feet below the bottom of excavations (subgrade) at all times in order to maintain a dry and undisturbed condition. The groundwater level shall be controlled so as to permit the placing and curing of concrete and the maintenance of supporting foundations and adjacent work and structures. The Contractor is fully responsible for protecting structures from flotation until final acceptance of the work.

C. The Contractor shall control, by acceptable means, all water regardless of source. Water shall be controlled and its disposal provided for at each berm, structure, etc. The entire periphery of the excavation areas shall be ditched and diked to prevent water from entering the excavation. The Contractor shall be fully responsible for disposal of the water and shall provide all necessary means at no additional expense to the OWNER. The Contractor shall be solely responsible for proper design, installation, proper operation, maintenance, and any failure of any component of the system.

D. The Contractor shall be responsible for and shall repair without cost to the OWNER, any damage to work in place and the excavation, including damage to the bottom due to heave and including removal of material and pumping out of the excavated area. The Contractor shall be responsible for damages to any other area or structure caused by his failure to maintain and operate the dewatering system proposed and installed by the Contractor.

E. The Contractor shall take all the steps that he considers necessary to familiarize himself with the surface and subsurface site conditions, and shall obtain the data that is required to analyze the water and soil environment at the site and to assure that the materials used for the dewatering systems will not erode, deteriorate, or clog to the extent that the dewatering systems will not perform properly during the period of dewatering. Copies of logs of borings and laboratory test results are available to the Contractor. This data is furnished for information only, and it is expressly understood that the OWNER and

Engineer will not be held responsible for any interpretations or conclusions drawn therefrom by the Contractor.

F. Prior to the execution of the work, the Contractor, OWNER and Engineer shall jointly survey the condition of adjoining structures. Photographs and records shall be made of any prior settlement or cracking of structures, pavements, and the like, that may become the subject of possible damage claims.

G. If a surface to receive foundation slabs cannot be maintained dry by the Contractor's dewatering efforts, then the Contractor shall provide tremie seals at no additional cost to the OWNER. The placement of tremie seals shall not preclude dewatering operations specified herein. The limits of tremie seals shall be recommended by the Contractor and reviewed and accepted by the Engineer.

H. The Contractor shall be responsible to dispose of water from the dewatering operation in accordance with the Contract Documents, and shall obtain all necessary permits and conform to all local regulations and Codes. Water from the trenches and excavation shall be retained onsite. If Contractor cannot comply, the Contractor shall be responsible for hiring an independent Engineer to file for all appropriate dewatering permits. If the latter case happens,, the Contractor shall dispose of water from trenches and excavation in such a manner as will not cause injury to public health, to public or private property, to the work completed or in progress, to the surface of the streets, will not cause any interference with the use of the same by the public, or will not cause pollution of any waterway or stream.

I. The Contractor shall submit its dewatering method and points of discharge, if necessary, to the Engineer for review at least 20 days prior to any dewatering activities. The Contractor shall provide maintenance of downstream systems to which it discharges. The cost of maintaining these systems shall be included in the bid price. The Contractor shall remove siltation and haul and dispose of this material on a regular basis to maintain the original base conditions at all time, so as not to impact drainage in the general area.

3.08 EMBANKMENTS

A. The Contractor shall perform the construction of embankments in such a manner that cut and fill slopes will be completed to final slopes and grade in a continuous operation. The operation of removing excavation material from any cut and the placement of embankment in any fill shall be a continuous operation to completion unless otherwise permitted by the Engineer.

B. Surfaces upon which embankments are to be constructed shall be stripped of topsoil, organic material, rubbish and other extraneous materials. After stripping and prior to placing embankment material, the Contractor shall compact the top 12-inches of in place soil as specified under Paragraph 3.10, COMPACTION.

C. Any soft or unsuitable materials revealed before or during the in place compaction shall be removed as indicated by the Engineer and replaced with select fill.

D. Ground surfaces, on which embankment is to be placed, shall be scarified or stepped in a manner which will permit bonding of the embankment with the existing surface. The embankment soils shall be as specified under Part 2 - Products, and shall be deposited and spread in successive, uniform, approximately horizontal layers not exceeding 8-inches in compacted depth for the full width of the cross section, and shall be kept approximately level by the use of effective spreading equipment. Hauling shall be distributed over the full width of the embankment, and in no case will deep ruts be allowed to form during the construction of the embankment. The embankment shall be properly drained at all times. Each layer of the embankment shall be thoroughly compacted to the density specified under Paragraph 3.10, COMPACTION.

E. The embankment or fill material in the layers shall be of the proper moisture content before compacting to obtain the prescribed compaction. Wetting or drying of the material and manipulation when necessary to secure a uniform moisture content throughout the layer shall be required. Should the material be too wet to permit proper compaction or rolling, all work on all portions of the embankment thus affected shall be delayed until the material has dried to the required moisture content. Samples of all embankment materials for testing, both before and after placement and compaction, will be taken at frequent intervals. From these tests, corrections, adjustments, and modifications of methods, materials, and moisture content will be made to construct the embankment.

F. Where embankments are to be placed and compacted on hillsides, or when new embankment is to be compacted against embankments, or when embankment is built in part widths, the slopes that are steeper than 4:1 shall be loosened or plowed to a minimum depth of 6 inches or, if in the opinion of the Engineer, the nature of the ground is such that greater precautions should be taken to bind the fill to the original ground then benches shall be cut in the existing ground as indicated by Engineer.

G. When rock and other embankment material are excavated at approximately the same time, the rock shall be incorporated into the outer portions of the embankments and the other material which meets the requirements for select fill shall be incorporated into the formation of the embankments. Stones or fragmentary rock larger than 4-inches in their greatest dimension will not be allowed within the top 6-inches of the final grade. Stones, fragmentary rock, or boulders larger than 12-inches in their greatest dimension will not be allowed in any portions of embankments and shall be disposed of by the Contractor as indicated by the Engineer. When rock fragments or stone are used in embankments, the material shall be brought up in layers as specified or directed and every effort shall be exerted to fill the voids with finer material to form a dense, compact mass which meets the densities specified for embankment compaction.

3.09 BACKFILLING

A. All structures and pipes shall be backfilled with the type of materials shown on the Drawings and specified herein. Select fill shall be deposited in successive, uniform, approximately horizontal layers not exceeding 8-inches in compacted depth for the full width. Stones or fragmentary rock larger than 4-inches in their greatest dimension will not be allowed within the top 6-inches of the ground nor within 6 inches of pipes. No stone or fragmentary rock larger than 12-inches in their greatest dimension will be allowed for any

portion of backfill. Compaction shall be in accordance with the requirements of Paragraph 3.09, COMPACTION.

B. Where excavation support is used, the Contractor shall take all reasonable measures to prevent loss of support beneath and adjacent to pipes and existing structures when supports are removed. If significant volumes of soil cannot be prevented from clinging to the extracted supports, the voids shall be continuously backfilled as rapidly as possible. The Contractor shall thereafter limit the depth below subgrade that supports will be installed in similar soil conditions or employ other appropriate means to prevent loss of support.

C. Backfill against concrete or masonry structure shall not be performed until the Work has been reviewed and backfilling permitted. Backfill against walls shall also be deferred until the structural slab for floors above the top fill line have been placed and attained design strength or earlier at the discretion of the Engineer. Partial backfilling against adequately braced wall may be considered by the Engineer on an individual situation basis. Where walls are to be waterproofed, all Work shall be completed and membrane materials dried or cured according to the manufacturer's instructions before backfilling.

D. Backfill against tanks and other structures which are to retain liquids shall not be performed until leakage tests are completed and accepted by the Engineer in accordance with the Section entitled "Water Tightness Testing".

3.10 COMPACTION

A. The Contractor shall compact embankments, backfill, crushed stone, aggregate base, and in place subgrade in accordance with the requirements of this Section. The densities specified herein refer to percentages of maximum density as determined by the noted test methods. Compaction of materials on the project shall be in accordance with the following schedule:

	Density % Std. Proctor (D698)	**Density % Mod. Proctor (D1557)**	**Max. Lift Thickness**
Embankments Beneath Structures*	--	98	8
Structural Fill	--	98	***
Backfill Around Structures	95	92	8
Crushed Stone Beneath Structures	**	**	12
Select Sand	--	98	8
Crushed Stone Backfill	**	**	12
In place Subgrade Beneath Structures	--	95	--

** Embankments beneath structures shall be considered to include a zone 10 feet out from the foundation of the structure extending down to the natural ground on a 45º slope.*

*** The aggregate shall be compacted to a degree acceptable to the Engineer by use of a vibratory compactor and/or crawler tractor.*

**** Structural fill shall be placed in loose lifts not exceeding 12-inches in thickness. If track-mounted equipment or vibratory roller in static mode is used, the lift thickness shall be reduced to 8-inches. if hand held compaction equipment is used, the lift thickness shall be further reduced to 6-inches.*

B. Compaction shall be conducted as follows:

1. A vibratory compactor that imparts a dynamic force of not less than 20,000 pounds shall be used. Each section of subgrade shall be subjected to multiple, overlapping (minimum 20% overlap) coverages of the compactor as it operates at normal walking speed. Vibratory equipment shall not be used within 50 feet of any existing structure.

2. Within 50 feet of any existing structure, non-vibratory compaction equipment such as track mounted bulldozer or a vibratory roller in the static mode shall be used. Within 5 feet of any existing structure, a walk behind vibratory sled or roller shall be used. A sufficient number of passes should be made within the construction area to compact the in-place soil as required in Article 3.10 A above.

C. Field density tests will be made by independent testing agency as described in Article 1.06. These tests shall be the basis for accepting or rejecting the compaction. In-place density tests will be performed in accordance with ASTM D 1556, ASTM D 2167, or ASTM D 6938. The Engineer will be the sole judge as to which test method will be the most appropriate. Failure to achieve the specified densities shall require the Contractor to re-compact the material or remove it as required. The Contractor shall, if necessary, increase the compactive effort by increasing the number of passes, using heavier or more suitable compaction equipment, or by reducing the thickness of the layers. The Contractor shall adjust the moisture contents of the soils to bring them within the optimum range by drying them or adding water as required.

D. Testing will be performed as frequently as deemed necessary by the Engineer. As a minimum, one in-place density test shall be performed for each lift of compacted soil, each 1000 cubic yards of embankment placed, 500 cubic yards of backfill placed, 2500 square feet of foundation area, or one test performed each day for either.

E. Final grades shall be within 0.1 foot of elevations shown. Where shown on the Drawings surfaces shall be sloped for drainage or other purposes.

F. Vibration monitoring shall be performed at nearby structures when compaction work is ongoing. A single monitoring point using vibration monitoring equipment capable of detecting velocities of 0.1 inch/second or less and survey measurements shall be used for vibration monitoring at each of the nearest structures. An elevation measurement on nearby structures shall be taken before compaction work starts, and then at least twice a day during the work with one reading taken at the conclusion of the day's operations. Elevation measurements shall be recorded to an accuracy of 0.001 foot. If at any time the Contractor detects settlement or heave of 0.005-feet or more, or vibration levels of 0.5 inch/second or more, the vibratory compaction shall be stopped immediately and the Engineer notified.

3.10 REMOVAL OF EXCESS AND UNSUITABLE MATERIALS

A. The Contractor shall remove and dispose of off-site all unsuitable materials. Within thirty (30) consecutive days after Notice to Proceed, the Contractor shall submit to the Engineer for review all required permits and a list of disposal sites for the unsuitable materials. If the disposal site is located on private property, the submittal shall also include written permission from the owner of record.

B. All unsuitable materials shall be disposed of in locations and under conditions that comply with federal, state and local laws and regulations.

C. The Contractor shall obtain an off-site disposal area prior to beginning demolition or excavation operations.

D. All excess and unsuitable materials shall be hauled in trucks of sufficient capacity and tight construction to prevent spillage. Trucks shall be covered to prevent the propagation of dust.

E. When all excess and unsuitable material disposal operations are completed, the Contractor shall leave the disposal sites in a condition acceptable to the OWNER and Owner(s) of the disposal site(s).

- END OF SECTION -

SECTION 02260 - FINISH GRADING

PART 1 - GENERAL

1.01 THE REQUIREMENT

A. The Contractor shall supply, place, compact and roll finish grade materials.

B. Finish grade sub-soil.

C. Cut out areas to receive stabilizing base course materials for paving and sidewalks.

D. Place, finish grade and compact topsoil.

1.02 RELATED WORK SPECIFIED ELSEWHERE

A. Excavation and Backfill for Utilities

B. Excavation and Backfill for Structures

1.03 PROTECTION

A. The Contractor shall prevent damage to existing structures, fencing, trees, landscaping, natural features, bench marks, pavement, utility lines, and correct all damaged areas at no cost to the Owner.

PART 2 -- PRODUCTS

2.01 MATERIALS

A. Topsoil shall be friable loam free from subsoil, roots, grass, excessive amount of weeds, stones and foreign matter; acidity range (pH) of 5.5 to 7.5; containing a minimum of 4% and a maximum of 25% organic matter.

2.02 CRUSHED STONE

A. Crushed stone for general grading purposes shall be as specified in the Section entitled “Excavation and Backfill for Structures”.

PART 3 -- EXECUTION

3.01 SUB-SOIL PREPARATION

A. Rough grade sub-soil systematically to allow for a maximum amount of natural settlement and compaction. Eliminate uneven areas and low spots. Remove debris, roots, branches, stones, etc., in excess of 2 inches in size. Remove sub-soil which has been contaminated with petroleum products or other materials.

B. Cut out areas, to sub-grade elevation, which are to receive stabilizing base for paving and sidewalks.

C. Bring sub-soil to required levels, profiles and contours. Make changes in grade gradual. Blend slopes in to level areas.

D. Slope grade away from building minimum 4 inches in 10 feet (unless indicated otherwise on Drawings).

3.02 PLACING TOPSOIL

A. Place topsoil in area where seeding, sodding and planting is to be performed. Place to the following minimum depths, up to finished grade elevations:

1. 6-inches for seeded areas.

2. 4 ½-inches for sodded areas.

3. 24-inches for shrub beds.

4. 18-inches for flower beds.

B. Use topsoil in relatively dry state. Place during dry weather.

C. Fine grade topsoil eliminating rough and low areas to ensure positive drainage. Maintain levels, profiles and contours of sub-grades.

D. Remove stones, roots, grass, weeds, debris and other foreign material while spreading.

E. Manually spread topsoil around trees, plants, buildings and other structures to prevent damage which may be caused by grading equipment.

F. Lightly compact placed topsoil.

3.03 SURPLUS MATERIAL

A. Remove surplus sub-soil and topsoil from site.

B. Leave stockpile areas and entire job site clean and raked, ready to receive landscaping.

- END OF SECTION -

SECTION 02500 - SURFACE RESTORATION

PART 1 -- GENERAL

1.01 THE REQUIREMENT

A. Items specified in this Section include repairs to landscaped and grassed areas that may be damaged or disturbed by CONTRACTOR activities.

1.02 RELATED WORK SPECIFIED ELSEWHERE

A. Section 02210 – Site Grading

B. Section 02510 – Asphaltic Concrete Pavement

C. Section 02934 – Sodding

1.03 SUBMITTALS

A. The CONTRACTOR shall submit submittals for review in accordance with the Section entitled “Submittals.”

1.04 PROTECTION OF EXISTING IMPROVEMENTS

A. The CONTRACTOR shall be responsible for the protection of all pavements and other improvements within the work area. All damage to such improvements, as a result of the CONTRACTOR's operations, beyond the limits of the work of pavement replacement shall be repaired by the CONTRACTOR at its expense.

1.05 GUARANTEE

A. The CONTRACTOR shall guarantee all trees, ground cover or shrubs planted or replanted under this Contract for a period of one year beyond acceptance of the project. In the event that any new tree, plant or shrub dies within the guarantee period, the CONTRACTOR shall be responsible for replacement in kind. In the event that a transplanted (reused) tree dies within the guarantee period, the CONTRACTOR shall be responsible for replacement in kind, except that the maximum height of any new tree shall be eight feet as measured from the ground surface, once planted, to the top of the tree.

PART 2 -- PRODUCTS

2.01 REPLACEMENT TREES, GROUND COVER AND SHRUBS

A. Replacement trees, ground cover and shrubs shall be of the same type and size and sound, healthy and vigorous, well branched and densely foliated when in leaf. They shall have healthy, well developed root systems and shall be free of disease and insect pests, eggs or larvae.

2.02 MULCH

A. Mulch shall be Flori-Mulch or equal. It must be uniformly shredded and be free from large pieces of bark, foreign matter, weed seeds and any other organic or inorganic material. Mulch shall be used around all shrubs, ground covers and tree trunks, and placed to a minimum depth of 2 inches extending from the tree trunk outward two feet. CONTRACTOR shall apply one application at initial installation and a second application prior to final acceptance.

2.03 GRAVEL BEDS

A. Filter Fabric: Filter fabric shall be nonwoven polyester material Trevia Type 1120 as manufactured by Hoechst Fibers Industries, or equal. Fabric weight shall be 6 ounces per square yard, puncture strength maximum 40 pounds, minimum Flux 240 gallons per minute per square foot. Fabric shall be installed in accordance with the manufacturer's recommendations, with precautions taken to avoid tearing the fabric. Fabric shall be laid in strips with a minimum overlap of one foot.

B. Limerock: Limerock shall meet ASTM A57 standards and shall be prewashed. Maximum size shall be 3/4 inch. Limerock shall be carefully placed and spread on the fabric to a minimum depth of 6 inches. Final grades and locations shall be as designated on the Drawings.

PART 3 -- EXECUTION

3.01 GRADING AND SODDING

A. The CONTRACTOR shall re-grade the work areas disturbed by its construction activities to the existing grade prior to commencement of construction.

B. Sod shall be placed on all grassed areas disturbed by construction activities, unless otherwise indicated on the Drawings. Sodding shall be in accordance with Section entitled "Sodding."

C. Maintenance: Sufficient watering shall be done by the CONTRACTOR to maintain adequate moisture for optimum development of the sodded areas. Sodded areas shall receive no less than 1.5 inches of water per week.

D. Repairs to Lawn Areas Disturbed by CONTRACTOR's Operations: Lawn areas damaged by CONTRACTOR's operations shall be repaired at once by proper sod bed preparation, fertilization and resodding, in accordance with these specifications. Regardless of the condition of the lawn area (weed content etc.) prior to the CONTRACTOR working in the area, all repairs shall be made with sod.

3.02 TREES, GROUND COVER AND SHRUBS

A. Excavation and Plant Holes: Excavations shall be roughly cylindrical in shape, with the side approximately vertical. Plants shall be centered in the hole. Bottoms of the holes shall be loosened at least six inches deeper than the required depth of excavation.

B. Holes for balled and burlaped plants shall be large enough to allow at least eight inches of backfill around the earth ball. For root balls over 18 inches in diameter, this dimension shall be increased to 12 inches. Where excess material has been excavated from the plant hole, the excavated material shall be disposed of as and where directed by the ENGINEER.

C. Setting of Plants: When lowered into the hole, the plant shall rest on a prepared bottom such that the roots are level with, or slightly above, the level of their previous growth and so oriented such as to present the best appearance. The CONTRACTOR, when setting plants in holes, shall make allowances for any anticipated settling of plants.

D. Palms of the sabal species may be set deeper than the depth of their original growth, provided that the specified clear trunk height is attained.

E. The backfill shall be made with planting mixture and shall be firmly rodded and watered-in, so that no air pockets remain. The quantity of water applied immediately upon planting shall be sufficient to thoroughly moisten all of the backfilled earth. Plants shall be kept in a moistened condition for the duration of the Contract.

F. Staking and Guying: Plants shall be staked in accordance with the following provisions:

1. Small Trees: For trees and shrubs of less than one-inch caliper, the size of stakes and the method of tying shall be such as to rigidly support the staked plant against damage caused by wind action or other effects. Trees larger than one inch and smaller than one and one-half inch caliper shall be staked with a two-inch stake, set at least 24 inches in the ground and extending to the crown of the plant. The plant shall be firmly fastened to the stake with two strands of 14 gauge soft wire, enclosed in rubber hose, or other approved covering. The wire shall then be nailed or stapled to the stake to prevent slippage.

2. Medium Trees: All trees, other than palm trees, larger than one and one-half inch caliper and smaller than two and one-half inch caliper shall be staked with two or more, two-inch by two-inch stakes, eight feet long, set two feet in the ground. The tree shall be midway between the stakes and held firmly in place by two strands of 12-gauge wire, applied as specified above for single stakes. The wires shall be tightened and kept tight by twisting.

3. Large Trees: All trees, other than palm trees, larger than two and one-half inch caliper, shall be braced with three or more two-inch by four-inch wood braces, toenailed to cleats which are securely banded at two pints to the palm, at a point at least six feet above the ground. The trunk shall be padded with five layers of burlap

under the cleats. Braces shall be approximately equidistantly spaced and secured underground with two-inch by four-inch by 24-inch stake pads. In firm rock soils, Number 4 steel reinforcing rods or one-half inch pipe is acceptable.

4. Palm Trees: Palm trees shall be braced with three or more two-inch by four-inch wood braces, toenailed to cleats which are securely banded at two points to the palm, at a point at least six feet above the ground. The trunk shall be padded with five layers of burlap under the cleats. Braces shall be approximately equidistantly spaced and secured underground with two-inch by four-inch by 24-inch stake pads. In firm rock soils, Number 4 steel reinforcing rods or one-half inch pipe is acceptable.

G. Pruning: All broken or damaged roots shall be cut off smoothly, and the tops of all trees shall be pruned in a manner complying with standard horticultural practice. At the time pruning is completed, all remaining wood shall be alive. All cut surfaces of one inch or more in diameter, above the ground, shall be treated with an approved commercial tree paint.

H. Maintenance: Maintenance shall begin immediately after each plant is planted and shall continue until all work under this Contract has been completed and accepted by the COUNTY. Plants shall be watered, mulched, weeded, pruned, sprayed, fertilized, cultivated and otherwise maintained and protected. Settled plants shall be reset to proper grade position, planting saucer restored and dead material removed. Guys shall be tightened and repaired.

I. Defective work shall be corrected as soon as possible after it becomes apparent. Upon completion of planting, the CONTRACTOR shall remove excess soil and debris, and repair any damage to structures, etc., resulting from planting operations.

3.03 GRAVEL BEDS

A. Clean, grade and place geotextile prior to placing gravel in gravel beds.

- END OF SECTION -

SECTION 02510 - ASPHALTIC CONCRETE PAVEMENT

PART 1 - GENERAL

1.01 THE REQUIREMENT

A. Construct asphaltic concrete pavement in accordance with the lines, grades and typical sections as indicated on the Drawings, specified herein and as required for a complete installation.

B. Replace and / or repair all existing asphaltic concrete pavement areas impacted by contractor operations, including trenching for new utilities, as well as damage that may result from contractor operations during the progress of the Work.

C. Temporary asphalt / trench repairs shall be installed within 1 week of excavation and backfill work on plant roadways impacted by construction.

1.02 SUBMITTALS

A. The CONTRACTOR shall submit its proposed formulae for the asphaltic concrete paving for review in accordance with the Section entitled “Submittals”.

1.03 QUALITY CONTROL

A. The phrase "DOT Specifications" shall refer to the Florida Department of Transportation Standard Specifications for Road and Bridge Construction. The DOT Specifications, are referred to herein and are hereby made a part of this Contract to the extent of such references, and shall be as binding upon the Contract as though reproduced herein in their entirety.

PART 2 - PRODUCTS

2.01 MATERIALS

A. Limerock Base: The limerock base shall consist of two courses of Miami Oolite limerock in accordance with Sections 200 and 911 of the DOT Specifications.

B. Prime Coat: The material used for the prime coat shall be cut-back Asphalt Grade RC-70 conforming to Sections 300 and 916 of the DOT Specifications for prime to be used on Miami Oolite formation limerock.

C. Asphaltic Concrete: Type SP 9.5 and SP 12.5 meeting the requirements in Section 334 of the DOT Specifications.

D. Reclaimed Asphalt: Reclaimed asphalt shall not be utilized.

E. Tack Coat: The material used for the tack coat shall be emulsified asphalt grade RS-2 conforming to DOT Sections 300 and 916.

PART 3 -- EXECUTION

3.01 INSTALLATION

A. Subgrade: Roadway subgrades shall be stabilized to the minimum depth shown on the Drawings to a Florida Bearing Value (FBV) of not less than 75. Stabilizing shall be type C as defined in Section 160 of the DOT specifications. Stabilization may require the addition and thorough mixing in of crushed limerock, coarse limerock screenings, or any other stabilizing material acceptable to the Engineer. The stabilizing material shall be applied in such quantity that, after mixing and blending, the subgrade will have a FBV of not less than 75. Stabilizing material shall be mixed or blended in the subgrade material by plowing, scarifying, disking, harrowing, blading and mixing with rotary tillers until the mixed materials are of uniform bearing value throughout the width and depth of the layer being processed. The minimum acceptable density at any location will be 100 % of maximum dry density as determined by AASHTO T-180.

B. At least three density determinations shall be made on each day's final compaction operations on each course and the density determinations shall be made at more frequent intervals if deemed necessary by the Engineer.

C. Limerock Base: The limerock base shall be constructed in accordance with Section 200 of the DOT Specifications, to the thickness and width indicated on the Drawings. Pavement base shall be constructed in two lifts.

D. After spreading of the base material is completed, the entire surface shall be scarified and shaped so as to produce the exact grade and cross section after compaction. For double course base, this scarifying shall extend a depth sufficient to penetrate slightly the surface of the first course. The maximum depth of each lift shall be 6-inches.

E. When the material does not have the proper moisture content to insure the required density, wetting or drying shall be required. If the material is deficient in moisture, water will be added and uniformly mixed in by disking the base course to its full depth. If the material contains an excess of moisture, it shall be allowed to dry before being compacted. Wetting and drying operations shall involve manipulation of the entire width and depth of the base as a unit. As soon as proper conditions of moisture are attained, the material shall be compacted to an average density not less than 98% of maximum dry density as determined by AASHTO T-180. Where the base is being constructed in more than one course, the density shall be obtained in each lift of the base.

F. During final compacting operations, if blading of any areas is necessary to obtain the true grade and cross section, the compacting operations for such areas shall be completed prior to making the density determination on the finished base.

G. Unless otherwise directed by the Engineer, the surface shall be "hard-planed" with a blade grader immediately prior to the application of the prime coat to remove the thin glaze or cemented surface and to allow free penetration of the prime material. The materials planed from the base shall be removed from the base area.

H. If cracks or checks appear in the base, either before or after priming, which in the opinion of the Engineer, would impair the structural efficiency of the base course, the Contractor shall remove such cracks or checks by re-clarifying, reshaping, adding base material where necessary and re-compacting, at no additional cost to the Owner.

I. Mixing Base and Subgrade: If at any time the subgrade material shall become mixed with the base course material, the Contractor shall, without additional compensation, dig out and remove the mixture, reshape and compact the subgrade and replace the materials removed with clean base material, which shall be shaped and compacted as specified above.

J. Prime Coat: The prime coat shall be applied at a rate of 0.15 gallons per square yard and the work performed in accordance with Section 300 of the DOT Specifications.

K. Asphaltic Concrete: The spreading, compacting and jointing the wearing surface shall be in accordance with Sections 330 and 333 of the DOT Specifications to the thickness indicated on the Drawings.

L. Tack Coat: Apply tack coat at a rate between 0.02 and 0.10 gallons per square yard, and perform the Work in accordance with Section 300 of the DOT Specifications.

3.02 TEMPORARY TRENCH REPAIR OR STABILIZATION

A. Following trenching and backfill within active plant roadways, but prior to final asphalt replacement at substantial completion, the Contractor shall install temporary trench repair, consisting of compacted base course and temporary asphalt.

B. Temporary trench repair shall include the preparation of the subgrade, the placing and compacting of the limerock base, the priming of the base, the placing and maintaining of the surface treatment, all as specified herein.

C. The width of trench repairs shall extend at least 12 inches beyond the limits of the asphalt impacted by excavation. The edge of the pavement to be left in place shall be cut to a true edge with a saw or other approved method so as to provide a clean edge to abut the repair. The line of the repair shall be reasonably uniform with no unnecessary irregularities.

3.03 PAVEMENT MARKINGS

A. All existing markings (i.e., lanes, edge of pavement, parking stalls, etc.) impacted by the Contractor during construction shall be replaced with new painted items in accordance with the requirements of Section 971 of the DOT Specifications.

3.04 CONNECTIONS WITH EXISTING FACILITIES

A. Where the bituminous pavement is to be connected with an existing roadway surface or other facility, the Contractor shall modify the existing roadway profile in such a manner as to produce a smooth riding connection to the existing facility.

B. Where it is necessary to remove existing asphalt surfaces to provide proper meet lines and riding surfaces, the Contractor shall saw cut the existing surface so that there will be sufficient depth to provide a minimum of 1-inch of asphalt concrete, and the waste material shall be disposed of to the satisfaction of the Engineer. Prior to placing the asphalt concrete, these areas shall be tacked. Meet lines shall be straight and the edges vertical. The edges of meet line cuts shall be painted with liquid asphalt or emulsified asphalt prior to placing asphalt concrete. After placing the asphalt concrete, the meet line shall be sealed by painting with a liquid asphalt or emulsified asphalt and immediately covered with clean, dry sand.

3.05 SURFACE TOLERANCE

A. Tests for conformity with the specified grade shall be made immediately after initial compression. Any variation shall be immediately corrected by the removal or addition of materials and by continuous rolling.

B. The completed surface of the pavement shall be of uniform texture, smooth, uniform as to grade, and free from defects of all kinds. The completed surface shall not vary more than 1/8 inch from the lower edge of a 12-foot straightedge placed on the surface along the centerline or across the trench.

C. After completion of the final rolling, the smoothness and grade of the surface shall again be tested by the Contractor.

D. When deviations in excess of the above tolerances are found, the pavement surface shall be corrected as stated in Section 330-12.4 of the DOT Specifications.

E. All areas in which the surface of the completed pavement deviates more than twice the allowable tolerances described above shall be removed and replaced to the satisfaction of the Engineer.

3.06 WEATHER CONDITIONS

A. Asphalt shall not be applied to wet material. Asphalt shall not be applied during rainfall or any imminent storms that might adversely affect the construction. The Engineer will determine when surfaces and materials are dry enough to proceed with construction. Asphalt concrete shall not be placed during heavy rainfall or when the surface upon which it is to be placed is wet.

3.07 PROTECTION OF STRUCTURES AND ADJUSTMENT OF APPURTENANCES

A. Provide whatever protective coverings may be necessary to protect the exposed portions of bridges, culverts, curbs, gutters, posts, guard fences, road signs, and any other structures from splashing oil and asphalt from the paving operations. Remove any oil, asphalt, dirt, or any other undesirable matter that may come upon these structures by reason of the paving operations.

B. Where water valve boxes, manholes, catch basins, or other underground utility appurtenances are within the area to be surfaced, the Contractor shall adjust the covers of these improvements to conform with the proposed surface elevations.

C. In this effort, the Contractor shall be responsible for ensuring that appurtenances are brought to proper grade to conform with finished surface elevations and any delays experienced from such obstructions will be considered as incidental to the paving operation. No additional payment will be made. Protect all covers during asphalt application.

3.08 PAVEMENT WARRANTY

A. Settlement of replaced pavement over trenches within the warranty period shall be considered the result of improper or inadequate compaction of the sub-base or base materials. The Contractor shall promptly repair all pavement deficiencies noted during the warranty period at the Contractor's sole expense.

- END OF SECTION –

SECTION 02526 -- CONCRETE PAVEMENT, CURB AND WALKWAYS

PART 1 - GENERAL

1.01 THE REQUIREMENT

A. Concrete pavement, curbs and sidewalk shall be constructed to the lines and grades and dimensions required for a complete installation as shown on the Drawings and specified herein.

1.02 SUBMITTALS

A. Shop drawings for reinforcing, joint material and mix designs shall be submitted for review in accordance with the Section entitled "Submittals".

PART 2 - PRODUCTS

2.01 CONCRETE

A. Concrete shall be Class B, conforming to the Section entitled "Cast-in-Place Concrete", unless noted or specified otherwise.

2.02 REINFORCING AND WELDED WIRE FABRIC

A. Joint reinforcing and welded wire fabric shall conform to the section entitled "Concrete Reinforcement".

2.03 JOINT SEALER FOR PAVEMENT

A. Joint sealer shall be a one or two part polysulfide base self leveling sealant for horizontal surfaces that has been developed for foot and vehicular traffic. The sealant shall conform to the requirements of the section entitled "Sealants and Caulking".

2.04 PREFORMED JOINT FILLER

A. Preformed joint filler shall be sponge rubber and conform to the requirements of AASHTO Designated M148, Type 1.

PART 3 - EXECUTION

3.01 SUBGRADE CONDITION

A. The finished subgrade shall be maintained in a smooth, compact condition and any areas which are disturbed prior to placing of the concrete shall be restored at Contractor expense. The subgrade shall be moist at the time the concrete is placed. Water shall be uniformly applied ahead of the paving operations as directed by the Engineer. If the Contractor does not maintain the subgrade in the required moist condition, a vapor barrier sheet will be required between the subgrade and the concrete.

B. The subgrade shall be accurately trimmed to the required elevation with a 1/4-inch tolerance. High areas shall be trimmed to proper elevation. Low areas may be filled with suitable material and compacted to the specified density or filled with concrete integrally with the placing of the pavement.

3.02 SETTING FORMS

A. The forms shall be accurately set to line and grade and such that they rest firmly, throughout their entire length, upon the compacted subgrade surface. Forms shall be joined neatly and tightly and braces to test the pressure of the concrete and the finishing operations. The alignment and grade of all forms shall be approved before and immediately prior to the placing of concrete.

3.03 MIXING CONCRETE

A. Concrete shall be mixed in accordance with the Section entitled "Cast-in-place Concrete".

3.04 PLACING CONCRETE

A. The concrete shall be distributed on the subgrade to such depth, that, when it is consolidated and finished, the slab thickness required by the Drawings will be obtained at all points and the surface will at no point be below the grade specified for the finished surface, after application of the allowable tolerance. The concrete shall be deposited on the subgrade in a manner which will require as little re-handling as possible.

B. Fabric reinforcement shall be placed at mid slab depth, and the fabric shall be maintained at this location during the placing and finishing operations.

C. Concrete shall be thoroughly consolidated against and along the faces of all forms, by means of hand-operated, spud-type vibrators. Vibrators shall not be permitted to come in contact with the subgrade or a side form. Vibration at any one location shall not continue so long as to produce puddles or the accumulation of excessive grout on the surface. In no case shall the vibrator be operated longer than 15 seconds in any one location.

3.05 STRIKING-OFF, CONSOLIDATING AND FINISHING CONCRETE

A. Immediately after the placing, the concrete shall be struck off, consolidated and finished, to produce a finished pavement conforming to the cross section, width and surface. Sequence of operations shall be as follows: strike-off; vibratory consolidation; screeding; floating; removal of laitance; straight-edging; and final surface finish.

3.06 STRAIGHTEDGING AND SURFACE CORRECTIONS

A. After floating has been completed and the excess water removed, but while the concrete is still in a plastic state, the surface of the concrete shall be tested for trueness with an accurate 10 foot straightedge. The straightedge shall be furnished by the Contractor. The straightedge shall be held in successive positions parallel to the road center line, in contact with the surface, and the whole area tested from one side of the slab to the other as necessary. any depressions shall be immediately filled with freshly mixed concrete and

struck-off; consolidated and refinished. High areas shall be cut down and refinished. Straightedge testing and surface correction shall continue until the entire surface appears to conform to the required grade and cross section.

3.07 FINAL FINISH

A. As soon as the water sheen has disappeared from the surface of the pavement and just before the concrete becomes non-plastic, a light broom finish shall be given to the surface.

3.08 EDGING

A. After the final finish has been applied, but before the concrete has become non-plastic, the edges of the pavement along each side of the strip being placed, on each side of construction joints and along any structure extending into the pavement, shall be carefully rounded to a ¼-inch radius except as otherwise indicated. A well-defined and continuous radius shall be produced and a smoother, dense mortar finish obtained. All concrete shall be completely removed from the top of the joint filler.

B. All joints shall be checked with a straightedge before the concrete has become non-plastic and, if one side of the joint is higher then the other or the entire joint is higher or lower then the adjacent slabs, corrections shall be made as necessary.

3.09 JOINTS

A. Construction Joints shall be located as shown on the Drawings and/or as directed by the Engineer.

B. Expansion joints shall be formed by placing pre-molded expansion joint material about all structures and features projecting through, into or against the pavement. Unless otherwise indicated, such joints shall be ½-inch in width.

C. Open type transverse expansion joints shall be provided at all sidewalk returns and at 50 feet intervals and wherever indicated on the Drawings. Open type joints shall be formed by staking a ¼-inch thick metal bulkhead in place and placing concrete on both sides. After the concrete has set sufficiently to preserve the width and shape of the joint, the bulkhead shall be removed. After the sidewalk has been finished over the joint, the slot shall be opened and edged with a tool having a ½-inch radius. Transverse expansion joints shall be cleaned and filled with joint filler strips ¼-inch thick conforming to the requirements of AASHTO M-153.

D. Scored joints shall be either formed or sawed at 5-foot intervals and shall extend to a depth of at least one fourth of the sidewalk slab thickness.

3.10 CURING

A. After the finishing operations have been completed and as soon as the concrete has hardened sufficiently that marring of the surface will not occur, the entire surface and the edges of the newly placed concrete shall be covered and cured with membrane curing compound.

B. Curing compound shall be uniformly applied to the surfaces to be cured, in a single coat, continuous film, at the rate of one gallon to not more than 200 square feet, by a mechanical sprayer.

C. Curing compound shall not be applied during periods of rainfall. Curing compound shall not be applied to the inside faces of joints to be sealed. Should the film become damaged from any cause within the required curing period, the damaged portions shall be repaired immediately with additional compound. Upon removal of side forms, the sides of the slabs exposed shall immediately be coated to provide a curing treatment equal to that provided for the surface.

3.11 CURB AND SIDEWALK CONSTRUCTION

A. Concrete curbs and sidewalks shall be constructed on a prepared smooth subgrade of uniform density. Large boulders and other obstructions shall be removed to a minimum depth of 6 inches below the finished subgrade elevation and the space shall be backfilled with sand, base course material or other suitable material which shall be thoroughly compacted by rolling or tamping. The Contractor shall furnish a template and shall thoroughly check the subgrade prior to depositing concrete.

B. Concrete for curbs and sidewalks shall be formed, mixed, placed and finished in conformance with the requirements of Division 3, except as modified herein. Concrete shall be cured with a clear membrane curing compound which shall be applied at a uniform rate of one gallon per 200 square feet in accordance with the requirements specified herein. Sidewalks shall be given a light broom finish.

3.12 CURBS

A. Curbs shall be constructed in uniform sections ten feet in length except where shorter sections are necessary for closures or arcs. The sections shall be separated by sheet metal templates set perpendicular to the face and tip of the curve and not less than 2 inches longer than the depth of the curb. The templates shall be held firmly during the placing of the concrete and shall be allowed to remain in place until the concrete has set sufficiently to hold its shape, but shall be removed while the forms are still in place.

B. After the concrete has sufficiently set for a minimum of 12 hours, the Contractor shall remove the forms and backfill the spaces on each side. The earth shall be compacted in satisfactory manner without damage to the concrete Work. Minor defects shall be filled with a mortar composed of one part Portland cement and two parts fine aggregate.

- END OF SECTION -

SECTION 02934 - SODDING

PART 1 - GENERAL

1.01 RELATED DOCUMENTS

A. All applicable provisions of the Bidding and Contract Requirements, and Division 1 - General Requirements shall govern the work under this Section.

1.02 WORK INCLUDED

A. The work included in this section consists of furnishing all labor, supplies, equipment and materials necessary to complete the installation of sod and associated materials herein after listed and as shown on the plans.

1.03 RELATED WORK

A. Section 02210 – Site Grading

1.04 QUALITY ASSURANCE

A. Substitutions: Do not make substitutions. If specified sod is not obtainable, submit proof of non-availability to ENGINEER, together with proposal for use of equivalent material.

B. Analysis and Standards: Package standard products with supplier's certified analysis. For other materials, provide analysis by recognized laboratory made in accordance with methods established by the Association of Official Agriculture Chemists, wherever applicable.

1.05 SUBMITTALS

A. Submit the following in accordance with Division 1 Specification Sections.

B. Plant and Material Certifications:

1. Certificate of inspection as required by governmental authorities.

2. Manufacturer's or vendor's certified analysis for soil amendments or fertilizer materials.

1.06 DELIVERY, STORAGE AND HANDLING

A. Packaged Materials: Deliver packaged materials in original sealed containers showing weight, analysis, and name of manufacturer. Protect materials from deterioration during delivery, and while stored at site.

B. Sod: Time delivery so that sod will be placed within 24 hours after stripping. Protect sod against drying.

C. Transporting:

1. Sod transported to the project in open vehicles shall be covered with tarpaulin or other suitable covers securely fastened to the body of the vehicle to prevent injury to the sod material. Closed vehicles shall be adequately ventilated to prevent overheating of the sod. Evidence of inadequate protection against drying out in transit shall be cause for rejection.

2. Sod shall be kept moist, fresh and protected at all times. Such protection shall encompass the entire period during which the sod is in transit, being handled, or in temporary storage.

3. Upon arrival at the temporary storage location or the site of work, sod shall be inspected for proper shipping procedures. Should the roots be dried out, the ENGINEER will reject the sod. When sod has been rejected, the CONTRACTOR shall remove it at once from the area of the work and replace it at no additional cost to the OWNER.

4. Unless otherwise authorized by the ENGINEER, the CONTRACTOR shall notify the ENGINEER at least 48 hours in advance of the anticipated delivery date of sod material. A legible copy of the invoice, showing species and variety of sod included for each shipment shall be submitted to the ENGINEER. Certificate of Inspection must accompany each sod shipment.

1.07 JOB CONDITIONS

A. Begin installation of sod after preceding related work is accepted.

B. Environmental Requirements:

1. Install sod during months acceptable to the ENGINEER.

2. Do not install sod on saturated soil.

C. Protection: Erect signs and barriers to control vehicular traffic.

D. Utilities: Determine location of underground utilities and perform work in a manner which will avoid possible damage. Hand excavate, as required. Maintain grade stakes set by others until removal is mutually agreed upon by parties concerned.

1.08 SEQUENCING AND SCHEDULING

A. Correlate planting with specified maintenance periods to provide maintenance from date of Substantial Completion.

B. Coordination with sodding: Plant trees, palms and shrubs after final grades are established and prior to planting of sod, unless otherwise acceptable to ENGINEER. If planting of trees, palms and shrubs occurs after sod work, protect sod areas and promptly repair damage to lawns resulting from planting operations.

1.09 SPECIAL PROJECT WARRANTY

A. Warranty sod through specified lawn maintenance period, and until Final Certification.

PART 2 - PRODUCTS

2.01 PLANTING SOIL

A. Provide new planting soil that is fertile, friable, natural loam, surface soil, reasonably free of subsoil, clay lumps, brush, weeds and other litter, and free of roots, stumps, stones larger than 1 inch in any dimension, and other extraneous or toxic matter harmful to plant growth.

B. Obtain planting soil from local sources or from areas having similar soil characteristics to that found at project site.

C. Refer to Section 162 of the "FDOT Standard Specifications for Road and Bridge Construction" dated 2007 for Topsoil Specifications.

2.02 COMMERCIAL FERTILIZER

A. For sod, provide fertilizer with percentage of nitrogen required to provide not less than 1 pound of actual nitrogen per 1,000 sq. ft. of lawn area and not less than 4 percent phosphoric acid and 2 percent potassium. Provide nitrogen in a form that will be available to sod during initial period of growth; at least 50 percent of nitrogen to be organic form.

2.03 SOD

A. Provide strongly rooted sod, not less than 2 years old, free of weeds and undesirable native grasses, and machine cut to pad thickness of 1-1/2 inch (plus or minus 1/4 inch), excluding top growth and thatch. Provide only sod capable of vigorous growth and development when planted (viable, not dormant).

B. Provide sod uniform pad sizes with maximum 5 percent deviation in either length or width. Broken pads with uneven ends will not be acceptable. Sod pads incapable of supporting their own weight when suspended vertically with a firm grasp on upper 10 percent of pad will be rejected.

C. Provide sod to match existing sod on-site and composed of the following:

1. St. Augustine Floritam

2. Argentine Bahia Grass

D. Sod shall be nursery grown on cultivated mineral agricultural soils. Sod shall have been mowed regularly and carefully maintained from planting to harvest.

E. American Sod Producers Association (ASPA) Grade: Nursery Grown or Approved. Field grown sod is not acceptable.

F. Furnished in pads:

1. Size:

a. Length: 24 inches plus or minus 5%.

b. Width: 18 inches plus or minus 5%

c. Thickness: 1-1/2 inches excluding top growth and thatch.

2. Not stretched, broken or torn.

G. Uniformly mowed height when harvested: 2 inches.

H. Thatch: Maximum 1/2 inch uncompressed.

I. Inspected and found free of disease, nematodes, pests, and pest larvae, by entomologist of State Department of Agriculture.

J. Weeds: Free of Bermuda grass, nut grass or other objectionable weeds.

K. Uniform in color, leaf texture, and density.

2.04 WATER

A. Water shall be potable, from municipal water supplies or other sources which are approved by a public health department and do not create staining of surfaces.

2.05 FERTILIZER

A. FS O-F-241c(1), Grade A or B.

B. The chemical designation shall be 1-8-8, with at least 50 percent of the nitrogen from a non-water-soluble organic source.

2.06 HERBICIDES

A. As recommended by the State Department of Agriculture.

2.07 STAKES

A. Softwood, 3/4 inch diameter, 8 inch length.

PART 3 - EXECUTION

3.01 PREPARATION OF GROUND SURFACE

A. Before mixing, clean planting soil of roots, plants, sods, stones, clay lumps, and other extraneous material harmful or toxic to plant growth.

B. Mix specified fertilizers with planting soil as necessary at rates specified. Delay mixing fertilizer if planting will not allow placing of planting soil within a few days.

C. For sod, mix planting soil either prior to planting or apply on surface of topsoil and mix thoroughly before planting.

3.02 PREPARATION OF PLANTING BEDS

A. Loosen subgrade of lawn areas to a minimum depth of 4 inches. Remove stones measuring over 1 1/2 inches in any dimension. Remove sticks, stones, rubbish, and other extraneous matter. Limit preparation to areas which will be planted promptly after preparation.

B. Spread planting soil to minimum depth of 2 inches or as required to meet lines, grades, and elevations shown, after light rolling and natural settlement. Add specified fertilizer and mix thoroughly into upper 4 inches of topsoil.

C. Place approximately 1/2 of total amount of top soil required. Work into top of loosened subgrade to create a transition layer and then place remainder of planting soil. Add specified soil amendments and mix thoroughly into upper 4 inches.

D. Where sod is to be planted in areas that have not been altered or disturbed by excavating, grading, or stripping operations, prepare soil for lawn planting as follows: Till to a depth of not less than 6 inches. Apply fertilizers as specified. Remove high areas and fill in depressions. Till soil to a homogenous mixture of fine texture, free of lumps, clods, stones, roots and other extraneous matter.

E. Prior to preparation of unchanged areas, remove existing grass, vegetation and turf. Dispose of such material outside of OWNER's property. Do not turn existing vegetation over into soil being prepared for lawns.

F. Allow for sod thickness in areas to be sodded.

G. Apply specified commercial fertilizer at rates specified and thoroughly mix into upper 2 inches of topsoil. Delay application of fertilizer if lawn planting will not follow within a few days.

H. Fine grade sod areas to smooth, even surface with loose, uniformly fine texture. Roll, rake, and drag lawn areas, remove ridges and fill depressions, as required to meet finish grades. Limit fine grading to areas which can be planted immediately after grading.

I. Moisten prepared sod areas before planting if soil is dry. Water thoroughly and allow surface to dry before planting lawns. Do not create a muddy soil condition.

J. Restore sod areas to specified condition, if eroded or otherwise disturbed, after fine grading and prior to planting.

3.03 SODDING NEW LAWNS

A. Lay sod within 24 hours from time of stripping.

B. Lay sod to form solid mass with tightly fitted joints. Butt ends and sides of sod strips; do not overlap. Stagger strips to offset joints in adjacent courses. Work from boards to avoid damage to subgrade or sod. Tamp or roll lightly to ensure contact with subgrade. Work sifted soil into minor cracks between pieces of sod; remove excess to avoid smothering of adjacent grass.

C. Anchor sod on slopes with wood pegs to prevent slippage.

D. Water sod thoroughly with a fine spray immediately after planting.

3.04 MAINTENANCE

A. Begin maintenance immediately after planting.

B. Maintain lawns for not less than 30 days after Substantial Completion Certification, and longer as required to establish an acceptable lawn.

C. Maintain sod by watering, fertilizing, weeding, mowing, trimming, and other operations such as rolling, regrading and replanting as required to establish a smooth, acceptable lawn, free of eroded or bare areas.

D. Mowing:

1. Whenever grass reaches a height of 3 inches, it shall be cut back to 2 inches with all clippings removed.

2. After two mowings, CONTRACTOR shall topdress the sod with an application of fertilizer at the rate of 1 pound of actual nitrogen per 1,000 square feet.

3.05 CLEANUP AND PROTECTION

A. During sodding work, keep pavements clean and work area in an orderly condition.

B. Protect sodding work and materials from damage due to landscape operations, operations by other CONTRACTOR's and trades, and trespassers. Maintain protection during installation and maintenance periods. Treat, repair, or replace damaged sod work as directed.

3.06 INSPECTION AND ACCEPTANCE

A. Sod areas will be accepted when in compliance with all the following conditions:

1. The roots are thoroughly attached to the soil.

2. Absence of visible joints.

3. All areas show a uniform stand of specified grass in healthy condition.

4. At least 60 days have elapsed since the completion of the work in this section.

B. When inspected sod work does not comply with requirements, replace rejected work and continue specified maintenance until reinspected by ENGINEER and found to be acceptable. Remove rejected plants and materials promptly from project site.

C. Procedure:

1. The CONTRACTOR shall submit a request for acceptance in writing to the ENGINEER. Request must be received not less than 10 days before the anticipated date for final inspection.

2. Upon completion of all repairs and/or renewals required by ENGINEER at the inspection, the ENGINEER will verify the completeness of the work and then notify the OWNER in writing that the work is accepted.

3. Upon Final Completion, the OWNER will assume maintenance of all sod areas.

- END OF SECTION -

SECTION 03305 - CONCRETE AND GROUT

PART 1 -- GENERAL

1.01 THE REQUIREMENT

A. Where shown on the Drawings or required for a complete project, furnish and install concrete and grout as described herein.

B. The Contractor shall furnish all materials for concrete in accordance with the provisions of this Section and shall form, mix, place, cure, repair, finish, and do all other work as required to produce finished concrete, all in accordance with the requirements of the Contract Documents.

C. The following types of concrete shall be covered in this Section:

1. Structural Concrete: Concrete to be used in all cases except where noted otherwise in the Contract Documents.

2. Sitework Concrete: Concrete to be used curbs, gutters, catch basins, sidewalks, cart paths, fence and guard post embedment, underground duct bank encasement and all other concrete appurtenant to electrical facilities unless otherwise shown or noted on the Drawings.

D. The following types of grout are covered in this Section:

1. Cement Grout: This type of grout shall be used wherever grout or cementitious grout is called for in the Contract Documents, unless another type is specifically referenced.

2. Non-Shrink Grout: Non-shrink cementitious grout or non-shrink epoxy grout shall be used whenever non-shrink grout is called for. Non-shrink cementitious grout shall be used at locations where there are no dynamic loads, the grout will not come in contact with wastewater or wastewater gases. Non-shrink epoxy grout shall be used in submerged (water or wastewater), under wastewater gas environment, and for anchorage of pump bases, motor bases, and any other equipment imparting dynamic loads to the support system.

1.02 RELATED WORK SPECIFIED ELSEWHERE

A. Division 16 – Electrical

1.03 REFERENCE SPECIFICATIONS, CODES, AND STANDARDS

A. Codes: Without limiting the generality of other requirements of these specifications, all work specified herein shall conform to or exceed the requirements of the Florida Building Code and the applicable requirements of the following documents to the extent that the provisions of such documents are not in conflict with the requirements of this Section.

B. Commercial Standards:

ACI 214	Recommended Practice for Evaluation of Strength Test Results of Concrete
ACI 301	Specifications for Structural Concrete for Buildings.
ACI 305	Hot Weather Concreting
ACI 306	Cold Weather Concreting
ACI 315	Manual of Standard Practice for Detailing Reinforced Concrete Structures.
ACI 318	Building Code Requirements of Reinforced Concrete.
ACI 347	Recommended Practice for Concrete Formwork.
ASTM A 185	Specification for Steel Welded Wire, Fabric, Plain, for Concrete Reinforcement.
ASTM A 615	Specification for Deformed and Plain Billet-Steel Bars for Concrete Reinforcement.
ASTM C 31	Test Methods for Making and Curing Concrete Test Specimens in the Field.
ASTM C 33	Specification for Concrete Aggregates.
ASTM C 39	Test Method for Compressive Strength of Cylindrical Concrete Specimens.
ASTM C 88	Test Method for Soundness of Aggregates by use of Sodium Sulfate or Magnesium Sulfate
ASTM C 94	Specification for Ready-Mixed Concrete.
ASTM C 114	Method for Chemical Analysis of Hydraulic Cement
ASTM C 136	Method for Sieve Analysis of Fine and Coarse Aggregate
ASTM C 143	Test Method for Slump of Portland Cement Concrete.
ASTM C 150	Specification for Portland Cement.
ASTM C156	Test Method for Water Retention by concrete Curing Materials
ASTM C 157	Test Method for length Change of Hardened Cement Mortar and Concrete

ASTM C 192	Method of Making and Curing Concrete Test Specimens in the Laboratory
ASTM C 227	Standard Test Method for Potential Alkali Reactivity of Cement Aggregate Combinations (Mortar-Bar Method).
ASTM C 260	Specification for Air-Entraining Admixtures for Concrete.
ASTM C 289	Standard Test Method for Potential Reactivity of Aggregates (Chemical Method)
ASTM C 309	Specification for Liquid Membrane-Forming Compounds for Curing Concrete.
ASTM C 494	Specification for Chemical Admixtures for Concrete.
ASTM C 579	Test Methods for Compressive Strength of Chemical - Resistant Mortars and Monolithic Surfacings.
ASTM C 618	Standard Specification for Fly Ash and Raw or Calcined Natural Pozzolan for use as a Mineral Admixture in Portland Cement Concrete
ASTM C 827	Test Method for Early Volume Change of Cemetitious Mixtures.
ASTM D 1751	Specification for Preformed Expansion Joint Fillers for Paving and Structural Construction (Non-extruding and Resilient Bituminous Types).
CRD C 621	Non-Shrink Grout
CRSI	Manual of Standard Practice.

C. Any procedure, materials or operation specified by reference to the American Society for Testing and Materials (ASTM), the American Concrete Institute (ACI), Building Code or other references shall comply with the requirements of the current and most recent specifications or standards. In conflicts between listed standards and this specification, the more stringent requirements shall govern.

D. The Contractor is expected to obtain the most recent issue of all standards, recommendations, codes or specifications referred to within this specification.

1.04 SUBMITTALS

A. Mix Desiqns: The design mixes to be used shall be prepared by qualified persons and submitted for review. The design of the mix is the responsibility of the Contractor subject

to the limitations of the specifications. Review processing of this submission will be required only as evidence the mix has been designed by qualified persons and that the minimum requirements of the specifications have been met. Such review will in no way alter the responsibility of the Contractor to furnish concrete meeting the requirements of the specifications. If in the progress of the work the sources of materials change in characteristics or the Contractor requests a new source in writing, the Contractor shall, at his expense submit new test data and information for the establishment of a new design mix. Submit mix designs for all classes of concrete to be used under this Contract. Mix design submittals shall include the following:

1. Sources of all materials and certifications of compliance with specifications for all sources of each material.

2. Certified current (less than one year old) chemical analysis of Portland Cement or Blended Cement to be used.

3. Certified current (less than one year old) chemical analysis of fly ash to be used.

4. Aggregate test results showing compliance with required standards, i.e. sieve analysis, aggregate soundness tests, etc.

5. Manufacturer's data on all admixtures stating compliance with required standards and are compatible with one another. Written conformance to the above mentioned requirements and the chloride ion content of the admixture will be required from the admixture manufacturer prior to Mix design review by the Engineer.

6. Field experience records and/or trial mix data for the proposed concrete mixes.

C. Grout: The Contractor shall submit shop drawings for all types of grout for use in this Project. Shop drawings shall include certified test results verifying the compressive strength, shrinkage, and expansion requirements specified herein; and manufacturer's literature containing instructions and recommendations on the mixing, handling, placement and appropriate uses for each type of grout used in the work.

D. Accessories: The Contractor shall submit shop drawings for all types of concrete accessories to be used for this project including, but not limited to, form ties, water stops, joint materials and curing agents.

E. Delivery Tickets: Where ready-mix concrete is used, the Contractor shall submit delivery tickets at the time of delivery of each load of concrete. Each certificate shall show the State certified equipment used for measuring and the total quantities, by weight, of cement, sand, each class of aggregate, admixtures, and the amounts of water in the aggregate and added at the batching plant as well as the amount of water allowed to be added at the site for the specific design mix. Each certificate shall, in addition, state the mix number, total yield in cubic yards, and the time of day, to the nearest minute, corresponding to when the batch was dispatched, when it left the plant, when it arrived at the job, the time that unloading began, and the time that unloading was finished.

F. Reinforcing Steel: The Contractor shall submit shop drawings of shop bending diagrams, placing lists, and Drawings of all reinforcing steel prior to fabrication.

1. The Contractor shall submit detailed placing and shop fabricating drawings, prepared in accordance with ACI 315 and ACI Detailing Manual - (SP66) for all reinforcing steel. These drawings shall be made to such a scale as to clearly show joint locations, openings, the arrangement, spacing and splicing of the bars. Where opening sizes are dependent on equipment selection the Contractor shall indicate all necessary dimensions to define steel lengths and placing details.

2. Details of the concrete reinforcing steel and concrete inserts shall be submitted by the Contractor at the earliest possible date after receipt by the Contractor of the Notice to Proceed. Said details of reinforcing steel for fabrication and erection shall conform to ACI 315 and the requirements specified and shown. The shop bending diagrams shall show the actual lengths of bars, to the nearest inch measured to the intersection of the extensions (tangents for bars of circular cross section) of the outside surface. The shop Drawings shall include bar placement diagrams which clearly indicate the dimensions of each bar splice.

3. Where mechanical couplers are shown on the Drawings to be used to splice reinforcing steel, the Contractor shall submit manufacturer's literature which contains instructions and recommendations for installation for each type of coupler used; certified test reports which verify the load capacity of each type and size of coupler used; and shop Drawings which show the location of each coupler with details of how they are to be installed in the formwork.

4. Requests to relocate any bars that cause interferences or that cause placing tolerances to be violated.

5. Proposed supports for each type of reinforcing.

6. Certification that all installers of dowel adhesives are certified as Adhesive Anchor Installers in accordance with the ACI-CRSI Anchor Installer Certification Program.

7. International Code Council-Evaluation Services Evaluation Services Report (ICC-ES ESR) for dowel adhesives.

G. Curing: Submit the following in accordance with Supplementary General Provisions Section 2.2b.

1. Proposed procedures for protection of concrete under wet weather placement conditions.

2. Proposed normal procedures for protection and curing of concrete.

3. Proposed special procedures for protection and curing of concrete under hot and cold weather conditions.

4. Proposed method of measuring concrete surface temperature changes.

5. Manufacturer's literature and material certification for proposed curing compounds.

1.05 QUALITY ASSURANCE

A. Tests on component materials and for compressive strength of concrete will be performed as specified herein. Test for determining slump will be in accordance with the requirements of ASTM C 143.

B. The cost of initial trial mixes and initial laboratory tests to design the mixes including compression tests, sieve analysis, and tests on trial mixes shall be included in the Contract Price.

C. The cost of all laboratory tests on cement, aggregates, and concrete, will be borne by the Owner. However, the Contractor shall be charged for the cost of any additional tests and investigation on work performed which does not meet the specifications.

C. Concrete for testing shall be supplied by the Contractor at no cost to the Owner, and the Contractor shall provide assistance to the Engineer in obtaining samples. The Contractor shall dispose of and clean up all excess material.

F. Construction Tolerances: The Contractor shall set and maintain concrete forms and perform finishing operations so as to ensure that the completed work is within the tolerances specified herein. Surface defects and irregularities are defined as finishes and are to be distinguished from tolerances. Tolerance is the specified permissible variation from lines, grades, or dimensions shown. Where tolerances are not stated in the Specifications, permissible deviations will be in accordance with ACI 347.

1.06 QUALITY CONTROL

A. Compressive Strength

1. Compression test specimens shall be taken during construction from the first placement of each class of concrete specified herein and at intervals thereafter as selected by the Engineer to insure continued compliance with these Specifications. At least one set of test specimens shall be made for each placement in excess of five cubic yards, or for each fifty (50) cubic yards of concrete placed, or for each 5000 square feet of surface area for slabs or walls, whichever is greater.

2. Samples of freshly mixed concrete shall be obtained in accordance with ASTM C 172, and compression test specimens for concrete shall be made in accordance with ASTM C 31. Specimens shall consist of at least five 6-inch diameter by 12-inch high cylinders, or eight 4-inch diameter by 8-inch high cylinders. Each cylinder shall be identified by a tag attached to the side of the cylinder.

3. The Contractor shall provide approved curing boxes for storage of cylinders on site. The insulated curing box shall be of sufficient size and strength to contain all the specimens made in any four consecutive working days and to protect the specimens from falling over, being jarred or otherwise disturbed during the period

of initial curing. The box shall be erected, furnished and maintained by the Contractor. Such box shall be equipped to provide the moisture and to regulate the temperature necessary to maintain the proper curing conditions required by ASTM C31. Such box shall be located in an area free from vibration such as pile driving and traffic of all kinds. No concrete requiring inspection shall be delivered to the site until such storage curing box has been provided. Specimens shall remain undisturbed in the curing box until ready for delivery to the testing laboratory but not less than sixteen hours

4. Compression test shall be performed in accordance with ASTM C 39. For 6x12 cylinders, two test cylinders will be tested at 7 days and 2 at 28 days. For 4x8 cylinders, three test cylinders will be tested at 7 days and three at 28 days. The remaining cylinders will be held to verify test results, if needed.

B. Consistency

1. Consistency of the concrete will be checked by the Engineer by standard slump cone tests. The Contractor shall make any necessary adjustments in the mix as the Engineer may direct and shall upon written order suspend all placing operations in the event the consistency does not meet the intent of the specifications. No payment shall be made for delays, material or labor costs due to such eventualities.

2. Slump tests shall be made in accordance with ASTM C 143. Slump tests shall be performed as deemed necessary by the Engineer and each time compressive strength samples are taken.

C. Air Content

1. Samples of freshly mixed concrete will be tested for entrained air content by the Engineer in accordance with ASTM C 231.

2. Air content tests will be performed as deemed necessary by the Engineer and each time compressive strength samples are taken.

D. Evaluation and Acceptance of Concrete

1. Evaluation and acceptance of the compressive strength of concrete shall be according to the requirements of ACI 215 and ACI 318, Chapter 5 "Concrete Quality Mixing and Placing", and as specified herein.

2. If any concrete fails to meet these requirements, immediate corrective action shall be taken to increase the compressive strength for all subsequent batches of the type of concrete affected.

3. All concrete which fails to meet the ACI requirements and these specifications, is subject to removal and replacement at the cost of the Contractor. Additional testing may also be required to verify compressive strength of concrete. Additional testing shall involve extraction and testing of concrete cores in accordance with ASTM C 42. Engineer shall determine locations where concrete cores shall be

taken. Nondestructive test methods shall not be used to verify strength of in-place concrete.

1.07 DEFINITIONS

A. In these Specifications, the term "Precast Concrete" shall mean precast manholes, handholes, vaults, pull boxes, and similar structures. It does not include precast prestressed concrete elements.

PART 2 -- PRODUCTS

2.01 FORMWORK

A. Form Materials: Except as otherwise expressly accepted by the Engineer, all lumber for use as forms, shoring, or bracing shall be new material. Materials for concrete forms shall conform to the following requirements:

1. Form materials shall be metal, wood, plywood, or other acceptable material that will not adversely affect the concrete and will facilitate placement of concrete to the shape, form, line, and grade shown.

2. Plywood for concrete formwork shall be new, waterproof, synthetic resin bonded, exterior type Douglas Fir or Southern Pine plywood manufactured especially for concrete formwork and shall conform to the requirements of PS 1 for Concrete Forms, Class 1, and shall be edge sealed. Wood forms for surfaces to be painted shall be Medium Density Overlaid plywood, MDO Exterior Grade. Thickness shall be as required to support concrete at the rate it is placed, but not less than 5/8-inch thick.

B. Formwork Accessories:

1. Unless otherwise shown, exterior corners in concrete members shall be provided with ¾-inch chamfers. Re-entrant corners in concrete members shall not have fillets unless otherwise shown.

2. Form ties shall be provided with a plastic cone or other suitable means for forming a conical hole to insure that the form tie may be broken off back of the face of the concrete. The maximum diameter of removable cones for rod ties, or of other removable form-tie fasteners having a circular cross-section, shall not exceed 1-1/2 inches; and all such fasteners shall be such as to leave holes of regular shape for reaming.

3. Form ties for water-retaining structures shall have integral waterstops. Removable taper ties may be used when acceptable to the Engineer. At locations where acceptable, a preformed mechanical EPDM rubber plug shall be used to seal the hole left after the removal of the taper tie. Plugs shall be X-Plug by the Greanstreak Group, Inc., or approved equal. Friction fit plugs shall not be used.

4. Form release agent shall be a blend of natural and synthetic chemicals that employs a chemical reaction to provide quick, easy and clean release of concrete from forms. It shall not stain the concrete and shall leave the concrete with a paintable surface. Formulation of the form release agent shall be such that it would minimize formation of "Bug Holes" in cast-in-place concrete.

2.02 CONCRETE MATERIALS

A. Materials shall be delivered, stored, and handled so as to prevent damage by water or breakage. Only one brand of cement shall be used. Cement reclaimed from cleaning bags or leaking containers shall not be used. All cement shall be used in the sequence of receipt of shipments.

B. All materials furnished for the work shall comply with the requirements of ACI 301, as applicable.

C. Storage of materials shall conform to the requirements of ACI 301.

D. Materials for concrete shall conform to the following requirements:

1. Cement shall be standard brand Portland cement conforming to ASTM C 150 Type II. A single brand of cement shall be used throughout the work, and prior to its use, the brand shall be acceptable to the Engineer. The cement shall be suitably protected from exposure to moisture until used. Cement that has become lumpy shall not be used. Sacked cement shall be stored in such a manner as to as to permit access for inspection and sampling. Certified mill test reports for each shipment of cement to be used shall be submitted to the Engineer, verifying compliance with these Specifications.

2. Water shall be potable, clean, and free from objectionable quantities of silty organic matter, alkali, salts and other impurities. The water shall be considered potable, for the purposes of this Section only, if it meets the requirements of the local governmental agencies. Agricultural water with high total dissolved solids (over 1000 mg/1 TDS) shall not be used.

3. Aggregates shall be obtained from pits acceptable to the Engineer, shall be non-reactive, and shall conform to the Florida Building Code and ASTM C 33. Maximum size of coarse aggregate shall be as specified in Paragraph 2.11B.

4. Fly ash shall meet the requirements of ASTM C 618 for Class F, except the loss on ignition shall not exceed 4%. The fly ash constituent shall be maximum 15% of the total weight of the combined Portland cement and fly ash.

5. Ready-mix concrete shall conform to the requirements of ASTM C 94.

6. Air-entraining agent meeting the requirements of ASTM C 260, shall be used. Sufficient air-entraining agent shall be used to provide a total air content of 3 to 5 percent. Air-entraining agent shall be Sika AER by Sika Corp., MB-VR by Master Builders, Darex AEA by Grace, AEA-92S by Euclid Chemical Company, or equal.

7. Water reducing and retarding admixtures shall be required at the Engineer's discretion or, if not required, may be added at the Contractor's option to control the set, effect water reduction, and increase workability. In either case, the addition of an admixture shall be at no additional cost to the Owner. The use of an admixture shall be subject to acceptance by the Engineer. Admixtures permitted shall conform to the requirements of ASTM C 494 (chemical admixtures). Admixtures shall contain no free chloride ions, be non-toxic after 30 days and shall be compatible with and made by the same manufacturer as the air entraining admixture.

2.03 CURING MATERIALS

A. Materials for curing concrete conform to ASTM C 309 Type 1-D, Class B with a minimum solids content of 30% and shall contain a fugitive dye. Curing compound shall be SureCure 30 by Kaufman Products, Inc., CA D.O.T. Acrylic Cure by Symons Corporation, Sealtight CS-309-30 by W. R. Meadows, or approved equal.

B. Polyethylene sheet for use as a concrete curing blanket shall be white and have a nominal thickness of 6 mils.

2.04 JOINT MATERIALS

A. Materials for joints in concrete shall conform to the following requirements:

1. Expansion Joint Material shall be a non-extruding, and shall be one of the following types:

   a. Type I – Sponge rubber, conforming to ASTM D1752, Type I

   b. Type II – Cork, conforming to ASTM D1752, Type II

   c. Type III – Self-expanding cork, conforming to ASTM D1752, Type III

   d. Type IV – Bituminous fiber, conforming to ASTM Designation D1752

2. Elastomeric joint sealer shall be a single component polyurethane sealant meeting ASTM C-920, Type S, Grade NS, Class 25, Use NT, M, A, and O. Capable of withstanding 25% in extension or compression such as Sikaflex 1A by Sika Corporation or approved equal.

3. Joint sealer to be submerged in liquids shall be a multi-component, non-sag, low-modulus polyurethane rubber sealant meeting ASTM C-920, Type M, Grade NS, Class 25, use NT, M, A, and O. Capable of withstanding 50% in extension or compression such as Sikaflex-2C NS/SL, Sika Corporation, or approved equal.

4. Joint sealer submerged in liquids with high concentration of chlorine (>2 ppm) shall be a multi-component chemical resistant polysulfide sealant conforming to ASTM

C-920, Type M, Grade NS, Class 25 such as Sonolastic Two Part by BASF Construction Chemicals, or approved equal.

5. Joint sealer in horizontal joints exposed to vehicular traffic shal be a nonsag, Multi Component, traffic grade polyurethane sealant meeting ASTM C920, Type 19, Grate NS, Class 25, use T, M, A, and O. DynaTread by Pecora Corporation, or approved equal.

B. Joint Cleaner: Joint cleaner shall be as recommended by the sealant caulking compound manufacturer.

C. Joint Primer: Joint primer shall be as recommended by sealant manufacturer.

2.05 REINFORCING STEEL

A. General: All reinforcing steel for all reinforced concrete construction shall conform to the following requirements:

1. Bar reinforcement shall conform to the requirements of ASTM A 615 for Grade 60 Billet Steel Reinforcement, and shall be manufactured in the United States. All reinforcing steel shall have the manufacturer's mill marking rolled into the bar which shall indicate the producer, size, type and grade. All reinforcing bars shall be deformed bars. Smooth reinforcing bars shall not be used unless specifically called for on the Drawings.

2. Welded wire fabric reinforcement shall conform to the requirements of ASTM A185. All welded wire fabric reinforcement shall be galvanized.

B. Field welding of reinforcing steel will not be allowed.

C. Accessories: Accessories shall include all necessary bolsters, chairs, spacers and other devices for supporting and fastening reinforcing in place complying with CRSI recommendations conforming to Class 1 bar supports. Bolsters for slab on grade shall have gray plastic tipped legs.

D. Concrete blocks (dobies), used to support and position reinforcement steel, shall have the same or higher comprehensive strength as specified for the concrete in which it is located. Where the concrete blocks are used on concrete surfaces exposed to view, the color and texture of the concrete blocks shall match that required for the finished surface. Wire ties shall be embedded in concrete block bar supports.

2.06 MECHANICAL COUPLERS

A. Mechanical couplers shall develop a tensile strength which exceeds 100 percent of the ultimate tensile strength and 125 percent of the yield strength of the reinforcing bars being spliced. The reinforcing steel and coupler used shall be compatible for obtaining the required strength of the connection.

B. Where the type of coupler used is composed of more than one component, all components required for a complete splice shall be supplied.

C. Hot forged sleeve type couplers shall not be used. Acceptable mechanical couplers are LENTON LOCK B-Series Mechanical Rebar Splicing System by ERICO, or approved equal. Mechanical couplers shall only be used where shown on the Drawings or where specifically approved by the Engineer.

D. Where the threaded rebar to be inserted into the coupler reduces the diameter of the bar, the threaded rebar piece shall be provided by the coupler manufacturer.

2.07 DOWEL ADHESIVE SYSTEM

A. Where shown on the Drawings, reinforcing bars anchored into hardened concrete with a dowel adhesive system shall use a two-component adhesive mix which shall be injected with a static mixing nozzle following manufacturer's instructions.

B. All holes shall be drilled with a carbide bit unless otherwise recommended by the manufacturer. If coring holes is allowed by the manufacturer and approved by the Engineer, cored holes shall be roughened in accordance with manufacturer requirements.

C. Thoroughly clean drill holes of all debris, drill dust, and water in accordance with manufacturer’s instructions with compressed air and a wire brush prior to installation of adhesive and reinforcing bar.

D. Degree of hole dampness shall be in strict accordance with manufacturer recommendations. Installation conditions shall be either dry or water-saturated. Water filled or submerged holes shall not be permitted unless specifically approved by the Engineer.

E. Injection of adhesive into the hole shall be performed in a manner to minimize the formation of air pockets in accordance with the manufacturer’s instructions.

F. Embedment Depth:

1. The embedment depth of the bar shall be as show on the Drawings. Although all manufacturers listed below are permitted, the embedment depth shown on the Drawings is based on “SET-XP” by Simpson Strong-Tie Co. If the Contractor submits one of the other named dowel adhesives from the list below, the Engineer shall evaluate the required embedment and the Contractor shall provide the required embedment depth stipulated by the Engineer specific to the approved dowel adhesive.

2. Where the embedment depth is not shown on the Drawings, the embedment depth shall be determined to provide the minimum allowable bond strength equal to the tensile strength of the rebar according to the manufacturer’s ICC-ES ESR.

3. The embedment depth shall be determined using the actual concrete compressive strength, a cracked concrete state, maximum long term temperature of 110

degrees F, and maximum short term temperature of 140 degrees F. In no case shall the embedment depth be less than the minimum, or more than the maximum, embedment depths stated in the manufacturer's ICC-ES ESR.

G. Engineer's approval is required for use of this system in locations other than those shown on the Drawings.

H. The adhesive system shall be IBC compliant for use in both cracked and uncracked concrete, must comply with the latest revision of ICC-ES Acceptance Criteria AC308, and shall have a valid ICC-ES report. The adhesive system shall be "Epcon System G5" as manufactured by ITW Redhead, " HIT-HY 200 Injection Adhesive Anchor System" as manufactured by Hilti, Inc. "SET-XP" as manufactured by Simpson Strong-Tie Co. or "PE-1000+" by Powers Fasteners. Fast-set epoxy formulations shall not be acceptable.

I. All individuals installing dowel adhesive system shall be certified as an Adhesive Anchor Installer in accordance with the ACI-CRSI Anchor Installation Certification Program.

2.08 READY-MIXED CONCRETE

A. Ready-mixed concrete shall conform to meeting the requirements as to materials, batching, mixing, transporting, and placing as specified herein and in accordance with ASTM C 94.

B. Ready-mixed concrete shall be delivered to the site of the work, and discharge shall be completed within one and one half hour after the addition of the cement to the aggregates or before the drum has been revolved 250 revolutions, whichever is first. In hot weather, or under conditions contributing to quick stiffening of the concrete, or when the temperature of the concrete is 85 degrees F or above, the time between the introduction of the cement to the aggregates and discharge shall not exceed 60 minutes.

2.09 CEMENT GROUT

A. Cement grout shall be composed of Portland cement and sand in the proportion specified in the Contract Documents and the minimum amount of water necessary to obtain the desired consistency. If no proportion is indicated, cement grout shall consist of one part Portland cement to three parts sand. Water amount shall be as required to achieve desired consistency without compromising strength requirements. White Portland cement shall be mixed with Portland cement as required to match color of adjacent concrete.

B. The minimum compressive strength at 28 days shall be 4000 psi.

C. For beds thicker than 1-1/2 inch and/or where free passage of grout will not be obstructed by coarse aggregate, 1-1/2 parts of coarse aggregate having a top size of 3/8 inch should be added. This stipulation does not apply for grout being swept in by a mechanism. These applications shall use a plain cement grout without coarse aggregate regardless of bed thickness.

D. Sand shall conform to the requirements of ASTM C144.

2.10 NON-SHRINK GROUT

A. Non-shrink Cement Grout:

1. Non-shrink cement grout shall be a prepackaged, inorganic, non-gas liberating, nonmetallic, cement-based grout requiring only the addition of water. Manufacturer's instructions shall be printed on each bag or other container in which the materials are packaged. The specific formulation for each class of nonshrink grout specified herein shall be that recommended by the manufacturer for the particular application.

2. Non-shrink cement grouts shall have a minimum 28 day compressive strength of 5000 psi (ASTM C109, restrained), shall have no shrinkage (0.0 percent) and a maximum 4.0 percent expansion in the plastic state when tested in accordance with ASTM C 827, and shall have no shrinkage (0.0 percent) and a maximum of 0.2 percent expansion in the hardened state when tested in accordance with CRD C 621.

3. Cement based grout shall be Five Star Grout as manufactured by Five Star Products, Inc., Fairfield, Connecticut, or approved equal.

4. Cementitious non-shrink grout shall be used at locations where there are no dynamic loads, the grout will not come in contact with wastewater or wastewater gases, and where non-shrink grout is identified on the Drawings. Applications include, but are not limited to, structural steel column base plates, gate frames and guides, and precast concrete to cast-in-place concrete joints.

B. Non-shrink Epoxy Grout:

1. Epoxy-based non-shrink grout shall be a three component, 100 percent solids, solvent-free system designed for machinery grouting. Applications include, but are not limited to, anchoring, pump and motor bases, and any other equipment imparting dynamic loads to the support system.

2. When non-shrink grout is identified on the Drawings in submerged (water or wastewater) or under wastewater gas environment, epoxy-based non-shrink grouts shall be used.

3. The epoxy grout shall be delivered to site as prepackaged, three-component systems composing of the resin, hardener, and specially blended aggregates. The components shall be stored as recommended by the manufacturer until use.

4. Non-shrink epoxy grout shall be Five Star DP Epoxy Grout by Five Star Products, Inc., Fairfield, Connecticut, or approved equal.

2.11 BONDING COMPOUND

A. For bonding freshly-mixed, plastic concrete to hardened concrete, Sikadur 32 Hi-Mod Epoxy Adhesive, as manufactured by Sika Corporation; Concresive Liquid (LPL), as

manufactured by Master Builders; BurkEpoxy MV as manufactured by The Burk Company; or approved equal shall be used.

2.12 CONCRETE DESIGN REQUIREMENTS

A. General: Concrete shall be composed of cement, admixtures, aggregates, and water. These materials shall be of the qualities specified. The exact proportions in which these materials are to be used for different parts of the work will be determined during the trial batch. In general, the mix shall be designed to produce a concrete capable of being deposited so as to obtain maximum density and minimum shrinkage and, where deposited in forms, to have good consolidation properties and maximum smoothness of surface. Mix designs with more than 41 percent of sand of the total weight of fine and coarse aggregate shall not be used. The aggregate gradations shall be formulated to provide fresh concrete that will not promote rock pockets around reinforcing steel or embedded items. The proportions shall be changed whenever necessary or desirable to meet the required results at no additional cost to the Owner. All changes shall be subject to review by the Engineer.

B. Water-Cement Ratio and Compressive Strength: The minimum compressive strength and cement content of concrete shall be not less than that specified in the following tabulation.

Type of Work	Min. 28-Day Compressive Strength (psi)	Max. Size Aggregate (in.)	Min. Cement per cu yd (sacks)	Max. W/C Ratio (by wt.)
Structural Concrete: All reinforced concrete unless noted otherwise below.	4,000 (Class A)	3/4	6.0	0.45
Sitework Concrete: Sidewalks and Erosion Control.	3,000 (Class B)	3/4	5.0	0.50

Note: One sack of cement equals 94 lbs.

C. Adjustments to Mix Design: The mixes used shall be changed whenever such change is necessary or desirable to secure the required strength, density, workability, and surface finish, and the Contractor shall be entitled to no additional compensation because of such changes.

2.13 CONSISTENCY

A. The consistency of the concrete in successive batches shall be determined by slump tests in accordance with ASTM C 143.

2.14 CHEMICAL RESISTANT WATERSTOP

A. General: Waterstop shall be manufactured from thermoplastic elastomeric rubber material. The synthetic rubber shall provide a high resistance to acids, bases, alcohols,

oils, solvents or chemicals. No reclaimed material shall be used. The Contractor shall obtain from the waterstop manufacturer and furnish to the Engineer for review, current test reports and a written certification of the manufacturer that the material to be shipped to the job meets the physical requirements outlined herein. Waterstop connections shall be heat welded. All waterstop corners, intersections, and directional changes shall be miter cut, heat welded, factory fabricated. Only straight butt splices shall be allowed in the field.

B. Multi-Rib Waterstop: All chemical resistant waterstop shall be of multi-rib construction. Waterstop for expansion joints shall be 9-in x 3/16-in ribbed with a center bulb. Waterstop for construction joints shall be 6-in x 3/16-in ribbed with a center bulb. Chemical resistant waterstop shall be Westech Type TPE-R synthetic rubber, manufactured by Westech Barrier Technologies, St. Louis, MO, or equal.

C. Waterstop Physical Properties: When tested in accordance with the specified test standards, the waterstop material shall meet or exceed the following requirements:

Physical Property	Value	ASTM Std
Tensile Strength	1800 psi	D-412
Ultimate Elongation	450%	D-412
100% Modulus	1000 psi	D-412
Shore "A" Hardness	85 units ± 5 units	D-2240
Brittle Point	-70°F	D-746
Ozone Resistance	450 pphm passed	D-1171

D. Weathering Performance: When tested in accordance with the specified test standards, the waterstop material shall meet or exceed the following requirements:

Physical Property	Value	ASTM Std
Tensile Strength (% Retention)	87%	D-412
Ultimate Elongation (% Retention)	84%	D-412
Shore "A" Hardness (units change)	7 units	D-2240

E. Chemical Resistance Properties: When tested in accordance with ASTM D-471 after 166 hours of full immersion at 73.4°F (23°C), the waterstop material shall meet or exceed the following requirements:

Fluid	Physical Property	Value
Sodium Hypochlorite 17%	Ultimate Elongation	101 Retention
	Ultimate Tensile	107% Retention
	100% Modulus	104% Retention
	Hardness Change Shore A	-4 Unit
	Weight Change	-0.1%

2.15 PREFABRICATED FORMS

A. Form materials shall be metal, wood, plywood, or other acceptable material that will not adversely affect the concrete and will facilitate placement of concrete to the shape, form, line, and grade indicated. Metal forms shall be an acceptable type that will accomplish such results. Wood forms for surfaces to be painted shall be Medium Density Overlaid plywood, MDO Ext. Grade.

2.16 FORMWORK ACCESSORIES

A. Unless otherwise shown, exterior corners in concrete members shall be provided with 3/4-inch chamfers. Re-entrant corners in concrete members shall not have fillets unless otherwise shown.

B. Form ties shall be provided with a plastic cone or other suitable means for forming a conical hole to insure that the form tie may be broken off back of the face of the concrete. The maximum diameter of removable cones for rod ties, or of other removable form-tie fasteners having a circular cross-section, shall not exceed 1-1/2 inches; and all such fasteners shall be such as to leave holes of regular shape for reaming.

C. Form release agent shall be a blend of natural and synthetic chemicals that employs a chemical reaction to provide quick, easy and clean release of concrete from forms. It shall not stain the concrete and shall leave the concrete with a paintable surface. Formulation of the form release agent shall be such that it would minimize formation of "Bug Holes" in cast-in-place concrete.

PART 3 -- EXECUTION

3.01 GENERAL FORMWORK REQUIREMENTS

A. Forms to confine the concrete and shape it to the required lines shall be used wherever necessary. The Contractor shall assume full responsibility for the adequate design of all forms, and any forms which are unsafe or inadequate in any respect shall promptly be removed and replaced at the Contractor's expense. All design, construction, maintenance, preparation, and removal of forms shall be in accordance with the FBC, ACI 347 and the requirements specified herein.

B. All forms shall be true in every respect to the required shape and size, shall conform to the established alignment and grade, and shall be of sufficient strength and rigidity to maintain their position and shape under the loads and operations incident to placing and vibrating the concrete.

3.02 FORMWORK CONSTRUCTION

A. Vertical Surfaces: All vertical surfaces of concrete members shall be formed, except where placement of the concrete against the ground is called for by the Engineer.

B. Construction Joints: Concrete construction joints will not be permitted at locations other than those shown or specified, except as may be acceptable to the Engineer. When a

second lift is placed on hardened concrete, special precautions shall be taken in the way of the number, location, and tightening of ties at the top of the old lift and bottom of the new to prevent any unsatisfactory effect whatsoever on the concrete.

C. Form Ties: Wire ties for holding forms will not be permitted. No form-tying device or part thereof, other than metal, shall be left embedded in the concrete. Ties shall not be removed in such manner as to leave a hole extending through the interior of the concrete members. The use of snap-ties which cause spilling of the concrete upon form stripping or tie removal will not be permitted. If steel panel forms are used, rubber grommets shall be provided where the ties pass through the form in order to prevent loss of cement paste. Where metal rods extending through the concrete are used to support or to strengthen forms, the rods shall remain embedded and shall terminate not less than 1 inch back from the formed face or faces of the concrete.

3.03 REUSE OF FORMS

A. Forms may be reused only if in good condition and only if acceptable to the Engineer. Light sanding between uses will be required wherever necessary to obtain uniform surface texture on all exposed concrete surfaces. Exposed concrete surfaces are defined as surfaces which are permanently exposed to view.

3.04 REMOVAL OF FORMS

A. Careful procedures for the removal of forms shall be strictly followed, and this work shall be done with care so as to avoid injury to the concrete. No heavy loading on green concrete will be permitted. Members which must support their own weight shall not have their forms removed until they have attained at least 75 percent of the 28-day strength of the concrete as specified herein. Forms for all vertical walls and columns shall remain in place at least 2 days after the concrete has been placed. Forms for all parts of the Work not specifically mentioned herein shall remain in place for periods of time as determined by the Engineer.

3.05 FABRICATION OF REINFORCING STEEL

A. Reinforcing steel shall be accurately formed to the dimensions and shapes shown on the Drawings, and the fabricating details shall be prepared in accordance with ACI 315 and ACI 318, except as modified by the Drawings.

B. Bending or Straightening: Reinforcement shall not be straightened or rebent in a manner which will injure the material. Bars with kinks or bends not shown shall not be used. All bars shall be bent cold, unless otherwise permitted by the Engineer. No bars partially embedded in concrete shall be field-bent except as shown or specifically permitted by the Engineer.

3.06 PLACING REINFORCING STEEL

A. Reinforcing steel shall be accurately positioned as shown on the Drawings, and shall be supported and wired together to prevent displacement, using annealed iron wire ties or suitable clips at intersections. All reinforcing steel shall be supported by concrete, plastic

or metal supports, spacers or metal hangers which are strong and rigid enough to prevent any displacement of the reinforcing steel. Where concrete is to be placed on the ground, supporting concrete blocks (or dobies) shall be used, in sufficient numbers to support the bars without settlement, but in no case shall such support be continuous. All concrete blocks used to support reinforcing steel shall be tied to the steel with wire ties which are embedded in the blocks. For concrete over formwork, the Contractor shall furnish concrete, metal, plastic, or other acceptable bar chairs and spacers.

B. The portions of all accessories in contact with the formwork shall be made of concrete, plastic, or steel coated with a 1/8 inch minimum thickness of plastic which extends at least 1/2 inch from the concrete surface. Plastic shall be gray in color.

C. Tie wires shall be bent away from the forms in order to provide the specified concrete coverage.

D. Bars additional to those shown which may be found necessary or desirable by the Contractor for the purpose of securing reinforcement in position shall be provided by the Contractor at its own expense.

E. Reinforcement placing tolerances shall be within the limits specified in ACI 318, unless otherwise directed by the Engineer.

F. Welded wire fabric reinforcement placed over horizontal forms shall be supported on slab bolsters having gray, plastic-coated standard type legs as specified herein. Slab bolsters shall be spaced not less than 30 inches on centers, shall extend continuously across the entire width of the reinforcing mat, and shall support the reinforcing mat in the plane shown.

G. Welded wire fabric placed over the ground shall be supported on wired concrete blocks (dobies) spaced not more than 3 feet on centers in any direction. The construction practice of placing welded wire fabric on the ground and hooking into place in the freshly placed concrete shall not be used.

3.07 SPLICING

A. Reinforcement bar splices shall only be used at locations shown. When it is necessary to splice reinforcement at points other than where shown, the character of the splice shall be as acceptable to the Engineer.

B. Lap length for reinforcement bars shall be in a Class B Splice in accordance with ACI 318, unless otherwise shown. Laps of welded wire fabric shall be in accordance with the ACI 318.

3.08 CLEANING AND PROTECTION OF REINFORCING STEEL

A. Reinforcing steel shall at all times be protected from conditions conducive to corrosion until concrete is placed around it.

B. The surfaces of all reinforcing steel and other metalwork to be in contact with concrete shall be thoroughly cleaned of all dirt, grease, loose scale and rust, grout, mortar, and other foreign substances immediately before the concrete is placed. Where there is a delay in depositing concrete, reinforcing shall be reinspected and, if necessary, recleaned.

3.09 PREPARATION OF SURFACES FOR CONCRETING

A. General: No concrete shall be placed until the reinforcement steel and formwork have been erected in a manner acceptable to the Engineer. The Contractor shall notify the Engineer not less than two working days prior to concrete placement, allowing for inspection and any corrective measures which are required. Earth surfaces shall be thoroughly wetted by sprinkling, prior to the placing of any concrete, and these surfaces shall be kept moist by frequent sprinkling up to the time of placing concrete thereon. The surface shall be free from standing water, mud, and debris at the time of placing concrete.

B. Joints in Concrete: Concrete surfaces upon or against which concrete is to be placed, where the placement of the old concrete has been stopped or interrupted so that, as determined by the Engineer, the new concrete cannot be incorporated integrally with that previously placed, are defined as construction joints. The surfaces of horizontal joints shall be given a compacted, roughened surface for good bond. Except where the Drawings call for joint surfaces to be coated, the joint surfaces shall be cleaned of all laitance, loose or defective concrete, and foreign material. Such cleaning shall be accomplished by sandblasting, followed by thorough washing. All pools of water shall be removed form the surface of construction joints before the new concrete is placed.

C. Existing concrete surfaces upon or against which concrete is to be placed shall be given a roughened surface for good bond. Joint surfaces shall be cleaned of all laitance, loose or defective concrete, and foreign material. Such cleaning shall be accomplished by hydroblasting. All pools of water shall be removed from the surface of construction joints before the new concrete is placed.

D. Placing Interruptions: When placing of concrete is to be interrupted long enough for the concrete to take a set, the working face shall be given a shape by the use of forms or other means that will secure proper union with subsequent work, provided that construction joints shall be made only where acceptable to the Engineer.

E. Embedded Items: No concrete shall be placed until all formwork, installation of parts to - be embedded, reinforcement steel, and preparation of surfaces involved in the placing have been completed and accepted by the Engineer at east 4 hours before placement of concrete. All surfaces of forms and embedded items that have become encrusted with dried grout from concrete previously placed shall be cleaned of all such grout before the surrounding or adjacent concrete is placed.

F. All reinforcement, anchor bolts, sleeves, inserts, and similar items shall be set and secured in the forms where shown on the Drawings or by shop drawings and shall be acceptable to the Engineer before any concrete is placed. Accuracy of placement is the responsibility of the Contractor.

G. Casting Against Old Concrete: Where concrete is to be cast against old concrete (any concrete which is greater than 60 days of age), the surface of the old concrete shall be thoroughly cleaned and roughened by hydro-blasting (exposing aggregate) prior to the application of an epoxy bonding agent. Application shall be according to the bonding agent manufacturer's instructions and recommendations.

H. No concrete shall be placed in any structure until all water entering the space to be filled with concrete has been properly cut off or has been diverted by pipes, or other means, and carried out of the forms, clear of the work. No concrete shall be deposited under water nor shall the Contractor allow still water to rise on any concrete until the concrete has attained its initial set. Water shall not be permitted to flow over the surface of any concrete in such manner and at such velocity as will injure the surface finish of the concrete. Pumping or other necessary dewatering operations for removing ground water, if required, will be subject to the review of the Engineer.

I. Openings for pipes, inserts for pipe hangers and brackets, and the setting of anchors shall, where practicable, be provided for during the placing of concrete.

J. Corrosion Protection: Pipe, conduit, dowels, and other ferrous items required to be embedded in concrete construction shall be so positioned and supported prior to placement of concrete that there will be a minimum of 2 inches clearance between said items, and any part of the concrete reinforcement will not be permitted.

K. Cleaning: The surfaces of all metalwork to be in contact with concrete shall be thoroughly cleaned of all dirt, grease, loose scale and rust, grout, mortar, and other foreign substances immediately before the concrete is placed.

3.10 MIXING, HANDLING, TRANSPORTING, AND PLACING

A. General: Placing of concrete shall conform to the applicable requirements of Chapter 8 of ACI 301 and the requirements of this Section.

B. Mixing: Mixing of concrete shall conform to the requirements of Chapter 7 of ACI 301.

C. Retempering: Retempering of concrete or mortar which has partially hardened will not be permitted.

D. Non-Conforming Work or Materials: Concrete which upon or before placing is found not to conform to the requirements specified herein shall be rejected and immediately removed from the Work. Concrete which is not placed in accordance with these Specifications, or which is of inferior quality, shall be removed and replaced by and at the expense of the Contractor.

E. Unauthorized Placement: No concrete shall be placed except in the presence of duly authorized representative of the Owner. The Contractor shall notify the Engineer in writing at least 24 hours in advance of placement of any concrete.

F. Placement in Slabs: Concrete placed in sloping slabs shall proceed uniformly from the bottom of the slab to the top, for the full width of the pour. As the work progresses, the

concrete shall be vibrated and carefully worked around the slab reinforcement, and the surface of the slab shall be screened in an up-slope direction.

G. Placement in Wall Forms: Concrete shall not be dropped through reinforcement steel or into any deep form, whether reinforcement is present or not, causing separation of the coarse aggregate from the mortar on account of repeatedly hitting rods or the sides of the form as it falls, nor shall concrete be placed in any form in such a manner as to leave accumulation of mortar on the form surfaces above the placed concrete. In such cases, some means such as the use of hoppers and, if necessary, vertical ducts of canvas, rubber, or metal shall be used for placing concrete in the forms in a manner that it may reach the place of final deposit without separation. In no case shall the free fall of concrete exceed 4 feet below the ends of ducts, chutes, or buggies. Concrete shall be uniformly distributed during the process of depositing, and in no case after depositing shall any portion be displaced in the forms more than 6 feet in horizontal direction. Concrete in forms shall be deposited in uniform horizontal layers not deeper than 2 feet; and care shall be taken to avoid inclined layers or inclined construction joints where such are required for sloping members. Each layer shall be placed while the previous layer is still soft. The rate of placing concrete in forms shall not exceed 5 feet of vertical rise per hour.

H. The surface of the concrete -shall be level whenever a run of concrete is stopped. To insure a level, straight joint on the exposed surface of walls, a wood strip at least 3/4 inch thick shall be tacked to the forms on these surfaces. The concrete shall be carded about 1/2 inch above the underside of the strip. About one hour after the concrete is placed, the strip shall be removed and any irregularities in the edge formed by the strip shall be leveled with a trowel and all laitance shall be removed.

I. Conveyor Belts and Chutes: All end of chutes, hopper gates and all other points of concrete discharge throughout the Contractor's conveying, hoisting and placing system shall be so designed and arranged that concrete passing from them will not fall separated into whatever receptacle immediately receives it. Conveyor belts, if used, shall be of a type acceptable to the Engineer. Chutes longer than 50 feet will not be permitted. Minimum slopes of chutes shall be such that concrete of the specified consistency will readily flow in them. If a conveyor belt is used, it shall be wiped clean by a device operated in such a manner that none of the mortar adhering to the belt will be wasted. All conveyor belts and chutes shall be covered. Sufficient illumination shall be provided in the interior of all forms so that the concrete, at the places of deposit, is visible from the deck or runway.

J. Temperature of Concrete: The temperature of concrete, when it is being placed, shall not be more than 90 degrees F nor less than 40 degrees F in moderate weather, and not less than 50 degrees F in whether during which the mean daily temperature drops below 40 degrees F. Concrete ingredients shall not be heated to a temperature higher than that necessarily to keep the temperature of the mixed concrete, as placed, from falling below the specified minimum temperature. If concrete is placed when the weather is such that the temperature of the concrete would exceed 90 degrees F, the Contractor shall employ effective means, such as precooling of aggregates and mixing water using ice or placing at night, as necessary to maintain the temperature of the concrete, as it is placed, below 90 degrees F. The Contractor shall be entitled to no additional compensation on account of the foregoing requirements.

3.11 PUMPING OF CONCRETE

A. If the pumped concrete does not produce satisfactory end results, the Contractor shall discontinue the pumping operation and proceed with the placing of concrete using conventional methods.

B. The minimum diameter of the hose (conduits) shall be 4 inches.

C. Minimum compressive strength, cement content, and maximum size of aggregates shall be as specified herein. Gradation of coarse aggregates shall conform to ASTM C 33 and shall be as close to the middle range as possible. Gradation of fine aggregate shall conform to ASTM C 33, with 15 to 30 percent passing the number 50 screen and 5 to 1 0 percent passing the number 1 00 screen. The fineness modulus of sand shall not be over 3.00.

3.12 TAMPING AND VIBRATING

A. As concrete is placed in the forms or in excavations, it shall be thoroughly settled and compacted, throughout the entire depth of the layer which is being consolidated, into a dense homogeneous mass, filling all comers and angles, thoroughly embedding the reinforcement, eliminating rock pockets, and bringing only a slight excess of water to the exposed surface of concrete during placement. Vibrators shall be high speed power vibrators (8,000 or 10,000 rpm) of an immersion type in sufficient number and with (at least one) standby units as required.

B. Concrete in walls shall be internally vibrated and at the same time rammed, stirred, or worked with suitable appliances, tamping bars, shovels, or forked tools until it completely fills the forms or excavations and closes snugly against all surfaces. Subsequent layers of concrete shall not be placed until the layers previously placed have been worked thoroughly as specified. Vibrators shall be provided in sufficient numbers, with standby units as required, to accomplish the results herein specified with 15 minutes after concrete of the prescribed consistency is placed in the forms. The vibrating head shall be kept from contact with the surfaces of the forms. Care shall be taken not to vibrate concrete excessively or to work it in any manner that causes segregation of its constituents.

3.13 FINISHING CONCRETE SURFACES

A. General: Surfaces shall be free from fins, bulges, ridges, offsets, honeycombing, or roughness of any kind, and shall present a finished, smooth, continuous hard surface. Allowable deviations from plumb or level and from the aligranent, profiles, and dimensions shown on the Drawings are defined as tolerances and are specified herein. These tolerances are to be distinguished from irregularities in finish as described herein. Aluminum finishing tools shall not be used.

B. Formed Surfaces: After removal of forms, the finishes described below shall be applied in accordance with Article 3.13, D. Unless the finish schedule specifies otherwise, all surfaces shall receive at least a Type I finish. The Engineer shall be the sole judge of acceptability of all concrete finish work.

1. Type I - Rough: All fins, burrs and other projections left by the forms shall be removed. All holes left by removal of ends of ties, and all other holes, depressions, or voids shall be filled solid with cement grout after first being thoroughly wetted. Honeycombs shall be chipped back to solid concrete as directed, prior to patching with cement grout. Holes shall be filled with a small tool that will permit packing the hole solidly with cement grout. Cement grout shall consist of one part cement to three parts sand, and the amount of mixing water shall be as little as consistent with the requirements of handling and placing. Color of cement grout shall match the adjacent wall surface. At locations where concrete coatings are specified to be applied, epoxy based patch material or filler surfaces compatible with the coating shall be used in lieu of cement grout specified herein. Concrete finish shall be in strict conformance to the coating / paint manufacturer's recommendations.

2. Type II - Grout Cleaned: Where this finish is required, it shall be applied after completion of Type I finish. After the concrete has been predampened, slurry consisting of one part cement (including an appropriate quantity of white cement in order to produce a color matching the surrounding concrete) and 1-1/2 parts sand passing the No. 16 sieve, by damp loose volume, shall be spread over the surface with clean burlap pads or sponge rubber floats. Any surplus shall be removed by scraping and then rubbing with clean burlap. The finish shall be kept damp for at least 36 hours after application.

3. Type III - Smooth Rubbed: Where this finish is required, it shall be applied after the completion of the Type I finish. No rubbing shall be done before the concrete is thoroughly hardened and the mortar used for patching is firmly set. A smooth, uniform surface shall be obtained by wetting the surface and rubbing it with a carborundum stone to eliminate irregularities. Unless the nature of the irregularities requires it, the general surface of the concrete shall not be cut into. Corners and edges shall be slightly rounded by the use of the carborundum stone. Brush finishing or painting with grout or neat cement will not be permitted.

C. Unformed Surfaces: The finishes described below shall be applied to unformed surfaces such as floors, slabs, flow channels and top of walls in accordance with Article 3.05 - Concrete Finish Schedule. The Engineer shall be the sole judge of acceptability of all such finish work.

1. Type "A" - Screeded: This finish shall be obtained by placing screeds at frequent intervals and striking off to the surface elevation required. When a Type "F" finish is subsequently to be applied, the surface of the screeded concrete shall be roughened with a concrete rake to ½" minimum deep grooves prior to final set.

2. Type "B" - Wood Floated: This finish shall be obtained after completion of a Type "A" finish by working a previously screeded surface with a wood float until the desired texture is reached. Floating shall begin when the water sheen has disappeared and when the concrete has sufficiently hardened so that a person's foot leaves only a slight imprint. If wet spots occur, water shall be removed with a squeegee. Care shall be taken to prevent the formation of laitance and excess

water on the finished surface. The finished surface shall be true, even, and free from blemishes and other irregularities.

3. Type "C" - Cork Floated: This finish shall be similar to Type "B" but slightly smoother than that obtained with a wood float. It shall be obtained by power or band floating with cork floats.

4. Type "D" - Steel Troweled: This finish shall be obtained after completion of a Type "B" finish. When the concrete has hardened sufficiently to prevent excess fine material from working to the surface, the surface shall be compacted and smoothed with not less than two thorough and complete steel troweling operations. In areas, which are to receive a floor covering such as tile, resilient flooring, or carpeting, only one troweling operation is required. The finish shall be brought to a smooth, dense surface, free from defects and blemishes.

5. Type "E" - Broom or Belt: This finish shall provide the surface with a transverse scored texture by drawing a broom or burlap belt across the surface immediately after completion of a Type "B" finish.

6. Type "F" - Swept in Grout Topping: This finish shall be applied after a completion of a Type "A" finish. The concrete surface shall be properly cleaned, washed, and coated with a mixture of water and Portland Cement. Cement grout in accordance with Section 03315 shall then be plowed and swept into neat conformance with the blades or arms of the apparatus by turning or rotating the previously positioned mechanical equipment. Special attention shall be paid to true grades, shapes and tolerances as specified by the manufacturer of the equipment. Before beginning this finish, the Contractor shall notify the Engineer and the equipment manufacturer of the details of the operation and obtain approval and recommendations of the equipment manufacturer.

7. Type "G" - Hardened Finish: Either a liquid hardened finish or an aggregate hardened finish shall be provided at the Contractor's option.

    a. Liquid hardened finish shall be provided by application of a liquid floor hardener. Floors to receive this finish shall have previously received a Type "D" finish. Liquid hardener shall be applied between 30 to 60 days after concrete placement. Surface to be treated shall be dry, clean and free of all loose dust, dirt, oil, wax, sealers and curing compounds. Application procedure shall be in accordance with manufacturer's instructions and shall consist of a three-coat treatment.

    b. Aggregate hardened finish shall be provided by applying an aggregate floor hardener concurrently with the application of a Type "D" finish. Application procedure shall be in accordance with manufacturer's instructions.

8. Type "H" - Non-Slip Finish: This finish shall be provided by applying a non-slip shake-on aggregate concurrently with the application of a Type "D" finish. Application procedure shall be in accordance with manufacturer's instructions.

9. Type "J" - Raked Finish: This finish shall be provided by raking the surface as soon as the condition of the concrete permits by making depressions of +/-1/4-inch.

D. CONCRETE FINISH SCHEDULE

Item	Type of Finish
Inner face of walls of tanks, flow channels, wet wells, perimeter walls, and miscellaneous structures to be coated in accordance with the Section entitled “Painting”	I
Exterior concrete walls below grade	I
Exterior exposed concrete walls and columns (including top of wall) to one foot below grade. All other exposed concrete surfaces not specified elsewhere	II
All interior exposed concrete vertical surfaces in buildings	III
Interior exposed ceiling, including beams	III
Floors of process equipment tanks or basins, and slabs to receive roofing material or waterproof membranes	B
All interior finish floors of buildings and structures and walking surfaces which will be continuously or intermittently wet	C
All interior finish floors of buildings and structures which are not continuously or intermittently wet	D
Floors to receive tile, resilient flooring, or carpeting	D
Concrete in flow channels not specified to be coated	D
Exterior concrete sidewalks, steps, ramps, decks, slabs on grade and landings exposed to weather	E
Floors of process tanks indicated on Drawings or in the specifications to receive cement grout topping	F
Precast concrete form panels, hollow core planks, double tees	J

3.14 CURING AND DAMPPROOFING

A. All concrete shall be cured for not less than 14 days after placing, in accordance with the methods specified herein for the different parts of the work, and described in detail in the following paragraphs.

FINISH SCHEDULE

Surface to be Cured or Dampproofed	Method
Unstripped forms	1
Construction joints between footings and walls, and between floor slab and columns	2

Encasement concrete and thrust blocks	3
All concrete surfaces not specifically provided for elsewhere in this Paragraph	4

B. Method 1: Wooden forms shall be wetted immediately after concrete has been placed and shall be kept wet with water until removed. If steel forms are used, the exposed concrete surfaces shall be kept continuously wet until the forms are removed. If forms are removed within 14 days of placing the concrete, curing shall be continued in accordance with Method 4.

C. Method 2: The surface shall be covered With burlap mats which shall be kept wet with water for the duration of the curing period, until the concrete in the walls has been placed. No curing compound shall be applied to surfaces cured under Method 2.

D. Method 3: The surface shall be covered with moist earth not less than 4 hours, nor more than 24 hours, after the concrete is placed. Earthwork operations that may damage the concrete shall not begin until at least 7 days after placement of concrete.

E. Method 4: The surface shall be sprayed with a liquid curing compound. It shall be applied in accordance with the manufacturers printed instructions at a maximum coverage rate of 200 square feet per gallon and in such a manner as to cover the surface with a uniform film which will seal thoroughly.

F. Care shall be exercised to avoid damage to the seal during the curing period. Should the seal be damaged or broken before the expiration of the curing period, the break shall be repaired immediately by the application of additional curing compound over the damaged portion.

G. Wherever curing compound may have been applied by mistake to faces against which concrete subsequently is to be placed and to which it is to adhere, said compound shall be entirely removed by hydroblasting just prior to the placing of new concrete.

H. Curing compound shall be applied as soon as the concrete has hardened enough to prevent marring on uniformed surfaces, and within 2 hours after removal of forms from contact with formed surfaces. Repairs required to be made to formed surfaces shall be made within the said 2-hour period; provided, however, that any such repairs which cannot be made within the said 2-hour period shall be delayed until after the curing compound has been applied. When repairs are to be made to an area on which curing compound has been applied, the area involved shall first be wet-sandblasted to remove the curing compound, following which repairs shall be made as provided herein.

3.15 PROTECTION

A. The Contractor shall protect all concrete against injury until final acceptance by the Engineer. Fresh concrete shall be protected from damage due to rain. The Contractor shall provide such protection while the concrete is still plastic and whenever such precipitation is imminent or occurring.

3.16 TREATMENT OF SURFACE DEFECTS

A. As soon as forms are removed, all exposed surfaces shall be carefully examined and any irregularities shall be immediately rubbed or ground in a satisfactory manner in order to secure a smooth, uniform, and continuous surface. Plastering or coating of surfaces to secure a smooth, uniform, and continuous surface. Plastering or coating of surfaces to be smoothed will not be permitted. No repairs shall be made until after inspection by the Engineer. In no case will extensive patching of honeycombed concrete be permitted. Concrete containing minor voids, holes, honeycombing, or similar depression defects shall have them repaired as specified herein. Concrete containing extensive voids, holes, honeycombing, or similar depression defects, shall be completely removed and replaced. All repairs and replacements herein specified shall be promptly executed by the Contractor at its own expense.

B. Defective surfaces to be repaired shall be cut back from trueline a minimum depth of 1/2 inch over the entire area. Feathered edges will not be permitted. Where chipping or cutting tools are not required in order to deepen the area properly, the surface shall be prepared for bonding by the removal of all laitance or soft material, and not less than 1/32 inch depth of the surface film from all hard portions, by means of an efficient sandblast. The material used for repair proposed shall be acceptable to the Engineer.

C. Holes left by tie-rod cones shall be reamed with suitable toothed reamers so as to leave the surfaces of the holes clean and rough. These holes then shall be repaired in an approved manner with dry-packed cement grout. Holes left by form-tying devices having a rectangular cross-section, and other imperfections having a depth greater than their least surface dimension, shall not be reamed, but shall be repaired in an approved manner with dry-packed cement grout.

D. All repairs shall be built up and shaped in such a manner that the completed work will conform to the requirements of this Section, using approved methods which will not disturb the bond, cause sagging, or cause horizontal fractures. Surfaces of said repairs shall receive the same kind and amount of curing treatment as required for the concrete in the repaired section.

3.17 CARE AND REPAIR OF CONCRETE

A. The Contractor shall protect all concrete against injury or damage from excessive heat, lack of moisture, overstress, or any other cause until final acceptance by the Owner. Particular care shall be taken to prevent the drying of concrete and to avoid roughening or otherwise damaging the surface. Any concrete found to be damaged, or which may have been originally defective, or which becomes defective at any time prior to the final acceptance of the completed work, or which departs from the established line or grade, or which, for any other reason, does not conform to the requirements of the Contract Documents, shall be satisfactorily repaired or removed and replaced with acceptable concrete at the Contractor's expense. This stipulation includes concrete experiencing cracking due to drying or thermal shrinkage of the concrete. Structural cracks shall be

repaired using an epoxy injection system approved by the Engineer. Non-structural cracks shall be repaired using a hydrophilic resin pressure injected grout system approved by the Engineer, unless other means or repair are deemed necessary and approved by the Engineer.

3.18 GROUT INSTALLATION

A. All surface preparation, curing, and protection of cement grout shall be as specified herein. The finish of the grout surface shall match that of the adjacent concrete.

B. The Contractor through the manufacturer of non-shrink grout shall provide on-site technical assistance upon request, at no additional cost to the Owner.

C. All mixing, surface preparation, handling, placing, consolidation, and other means of execution for prepackaged grouts shall be done according to the instructions and recommendations of the manufacturer.

D. Grout shall be placed in such a manner, for the consistency necessary for each application, so as to assure that the space to be grouted is completely filled.

- END OF SECTION -

SECTION 03480 - PRECAST CONCRETE MANHOLES, HANDHOLES AND VAULTS

PART 1 - GENERAL

1.01 THE REQUIREMENT

A. The Contractor shall construct all precast concrete items as required in the Contract Documents, including all appurtenances necessary to make a complete installation.

1.02 QUALITY CONTROL

A. Without limiting the generality of other requirements of these specifications, all work specified herein shall conform to or exceed the requirements of the Florida Building Code (FBC) and the applicable requirements of the following documents to the extent that the provisions of such documents are not in conflict with the requirements of this section:

1. ASTM C478 Specification for Precast Reinforced Concrete Manhole Sections.

2. ACI 318 Building Code Requirements for Reinforced Concrete.

1.03 SUBMITTALS

A. The Contractor shall submit shop drawings for all precast concrete items. Submitted drawings shall show all dimensions, location and type of lifting inserts, and details of reinforcement and joints in accordance with Section 01300 titled "Submittals".

B. For all precast items which are manufactured, the Contractor shall also submit a list of the design criteria used by the manufacturer.

C. For all precast items which are manufactured, and which have a clear dimension, in any direction, greater than or equal to 4 feet – 0 inches, the Contractor shall submit design calculations showing, at least, the design loads and stresses on the item. Calculations shall be signed and sealed by a Professional Engineer registered in the State of Florida.

D. The Contractor shall submit certified reports for all lifting inserts, showing allowable design loads on the inserts.

PART 2 - PRODUCTS

2.01 PRECAST CONCRETE MANHOLES

A. Precast concrete manhole sections shall be furnished with waterstops, sleeves, and openings as required to be watertight. Box out for wall pipes shall conform accurately to the sizes and elevations of the adjoining pipes. Precast concrete manhole sections shall conform to ASTM C478 except as modified herein:

1. Reinforcement, if shown, shall be as shown on the Drawings and shall conform to the requirements of Section titled "Concrete and Grout".

2. Sections shall have rebate joints.

3. Tapered top sections shall be supplied where they are shown on the drawings, or where they are otherwise indicated to be necessary.

4. The design and manufacture of the sections shall be based on H-20 traffic loading.

5. Minimum wall thickness shall be eight inches.

6. Cement shall be ASTM C150, Type II.

7. The date and name of manufacturer shall be marked inside each precast section.

2.02 MISCELLANEOUS PRECAST VAULTS

A. Miscellaneous precast vaults shall include, but are not limited to, electric manholes, pull boxes and meter boxes. Vault dimensions shall be as required by the Contract Drawings. Concrete properties shall conform to the requirements of Section titled "Concrete and Grout". Frames and lids of covers shall be provided by the vault manufacturer and shall conform to the requirements of Section 05540 - Castings. Covers shall have lifting handles.

B. When leveling bolts are used to set the vault top sections, the Contractor shall ensure that the load on the vault will be transferred through the mortar to the vault, and will not be carried by the leveling bolts.

C. All vaults shall be designed for H-20 traffic loading. Lateral loads on all vault walls shall be as follows:

1. Operating 75 x h (lbs.) triangular equivalent fluid pressure plus surcharge of 240 PSF in areas designed for vehicular traffic.

2. Where h = depth of fill

D. Piping, electrical, and other details shall be as required by the Contract Documents.

2.03 SITE-CAST ITEMS

A. Not Used.

2.03 PRE-FORMED JOINT SEALANT

A. The joint sealing compound shall preformed, cold-applied, ready to use plastic joint sealing compound, "Ram-Neck" by K.T. Snyder Company; or equal.

2.04 MORTAR

A. Mortar used between the sections of precast concrete manholes and vaults shall be as recommended by the section manufacturer, subject to the requirements of Division 4.

2.05 NON-SHRINK GROUT

A. Non-shrink grout shall be as specified in Section 03305 entitled "Concrete and Grout".

PART 3 - EXECUTION

3.01 MANUFACTURED ITEMS

A. Precast Concrete Manhole Sections

1. Precast concrete manhole sections shall be set so as to be vertical, with sections in true alignment. The joint of the previously set section shall be covered with mortar and preformed joint sealant before the next section is placed. Before the mortar is set, joints shall be pointed, and exterior joints shall be thoroughly tooled so as to be slightly concave with a hard polished surface, free of cracks. Interior joints shall be tooled flush in a similar manner. Wrap manhole joints with Con Wrap by Concrete Sealants or equal.

B. Miscellaneous Precast Vaults

1. All pull boxes, electrical manholes, vaults, meterboxes and other miscellaneous precast concrete boxes shall be installed in accordance with the manufacturer's recommendations, unless otherwise required by the drawings.

3.02 SITE CAST ITEMS

A. Not used.

- END OF SECTION -

SECTION 04100 - MORTAR AND MASONRY GROUT

PART 1 -- GENERAL

1.01 THE REQUIREMENT

A. Furnish labor, materials, equipment and appliances required for complete execution of Work shown on Drawings and specified herein.

B. Principal items of work include:

1. Mortar for unit masonry work.
2. Grout for grouting masonry.
3. Mortar for pointing and touchup.

1.02 RELATED WORK SPECIFIED ELSEWHERE

A. Section 04150 - Masonry Accessories

B. Section 04200 - Unit Masonry

1.03 REFERENCE SPECIFICATIONS, CODES, AND STANDARDS

A. Without limiting the generality of the Specifications, the Work shall conform to the applicable requirements of the following documents:

1.	ASTM C91	Standard Specification for Masonry Cement
2.	ASTM C144	Standard Specification for Aggregate for Masonry Mortar
3.	ASTM C150	Standard Specification for Portland Cement
4.	ASTM C207	Standard Specification for Hydrated Lime for Masonry Purposes
5.	ASTM C270	Standard Specification for Mortar for Unit Masonry
6.	ASTM C476	Standard Specification for Grout for Masonry
7.	ASTM C979	Pigments for Integrally Colored Concrete
8.	ASTM C1019	Standard Methods of Sampling and Testing Grout
9.	ACI 530.1/ASCE 6	Specification for Masonry Structures

1.04 SUBMITTALS

A. In accordance with the procedures and requirements set forth in Section 01300 - Submittals, submit the following:

1. Manufacturer's data and mixing instructions for each product.

2. Certificate of compliance with these specifications for each material specified below.

3. Test reports.

4. Samples of colored masonry mortar.

1.05 DELIVERY AND STORAGE

A. Deliver materials in manufacturer's original containers, bearing labels indicating product and manufacturer's name.

B. Store cementitious materials in waterproof locations to prevent damage by elements. Reject containers showing evidence of damage.

C. Store aggregates in separate bins to prevent intrusion of foreign particles. Do not use bottom 6 inches of sand or other aggregate stored in contact with the ground.

PART 2 -- PRODUCTS

2.01 ACCEPTABLE MANUFACTURERS

A. Subject to compliance with the Specifications provide products manufactured by one of the following:

1. LaFarge, Reston, VA

2. Lehigh Cement Company, Allentown, PA

3. Holcim, Inc., Dundee, MI

2.02 MATERIALS

A. Mortar and Grout Materials

1. Portland Cement: ASTM C-150, Type I above grade and Type II below grade.

2. Hydrated lime: ASTM C-207, Type "S".

3. Sand: Clean, coarse, free of loam, salt, organic and foreign matter and conforming to ASTM C-144.

4. Coarse and fine aggregates for grout: ASTM C-404.

5. Masonry Cement: ASTM C 91, Type S and meet the following criteria:

   a. Prepackaged masonry cement shall contain Portland Cement, hydrated lime and plasticizing admixtures or hydraulic hydrated lime. Masonry cements which contain other materials, including ground limestone, ground slag, or other cementitious and non-cementitious materials, are not acceptable.

6. Water - clean, fresh, potable and free from injurious amounts of oil, acids, alkalies, salts, organic matter or other deleterious substances.

B. Admixtures

1. Do not use calcium chloride.

2. Provide water repellant admixture in mortar used for architectural concrete masonry units. Admixture shall be compatible with ACMU water repellant admixture.

3. Do not use admixtures, without written approval of Engineer.

C. Mortar pigment

1. Natural or synthetic iron oxide and chromium oxides meeting the requirements of ASTM C979.

2. Pigment shall not exceed 10% of the weight of Portland cement. Carbon black shall not exceed 2% of Portland cement.

3. Color shall be selected by the Owner from the manufacturer's full range of colors.

2.03 GROUT AND MORTAR MIXES

A. Masonry mortar shall be Type "S" according to ASTM C-270. Proportions for masonry mortar shall be one of the following:

1. Proportions by volume: 1 part Portland cement to 1/4 - 1/2 parts hydrated lime, and aggregate volume of not less than 2-1/4 or more than 3 times the sum of the volumes of cement and lime.

2. Proportions by volume: 1/2 part Portland cement to 1 part masonry cement, and aggregate volume of not less than 1-1/4 or more than 3 times the sum of the volumes of cement and lime.

B. Proportions for pointing mortar.

1. Proportions by volume: 1 part Portland cement to 1/4 part hydrated lime and 2 parts extra fine sand.

C. Masonry Grout shall conform to the requirements of ASTM C 476 and ACI 530.1/ASCE 6, strength of grout, tested in accordance with ASTM C 1019 shall be equal to f'm as specified in Section 04200, but not less than 2,000 psi.

1. Test grout for every 5,000 square feet of masonry, with a minimum of one test per structure.

PART 3 -- EXECUTION

3.01 FIELD MORTAR MIXING

A. Mixing shall be by mechanically operated batch mixer. Entirely discharge before recharging. Mix sand, lime, cement and admixtures dry for two (2) minutes minimum, add water and mix for three (3) minutes minimum. Control batching procedures by measuring materials by volume. Measurement by shovel count shall not be permitted. Mix mortar with less water than the maximum amount, consistent with workability, to provide near maximum tensile bond strength. Mix only quantity that can be used before initial set, or within the first one-half hour.

B. Mixers, wheel barrows, mortar boards, etc., shall be kept clean.

C. Retempering of mortar will not be permitted and mortar allowed to stand more than one (1) hour shall not be used.

3.02 INSTALLATION

A. Install mortar and grout in accordance with ACI 530.1/ASCE 6.

3.03 REPOINTING MORTAR

A. Prehydrate the mortar by mixing ingredients together dry, and then add only enough water to make a damp, stiff mix that will retain its form when pressed into a ball. After one to two hours, add water to bring it to the proper consistency.

- END OF SECTION -

SECTION 04150 - MASONRY ACCESSORIES

PART 1 -- GENERAL

1.01 THE REQUIREMENT

A. Furnish labor, materials, equipment and appliances required for complete execution of Work shown on Drawings and specified herein.

B. Principal items of work include:

1. Metal joint reinforcement for masonry.

2. Accessories for masonry construction.

1.02 RELATED WORK SPECIFIED ELSEWHERE

A. Section 04100 - Mortar and Masonry Grout

B. Section 04200 - Unit Masonry

1.03 REFERENCE SPECIFICATIONS, CODES AND STANDARDS

A. Without limiting the generality of these specifications, Work shall conform to the applicable requirements of the following documents:

1.	ASTM A1064/1064M	Standard Specification for Carbon Steel Wire and Welded Wire Reinforcement, Plain and Deformed, for Concrete
2.	ASTM A153	Standard Specification for Zinc Coating (Hot Dip) on Iron and Steel Hardware
3.	ASTM A 951	Standard Specification for Steel Wire Masonry Joint Reinforcement
4.	ASTM D1056	Standard Specification for Flexible Cellular Materials - Sponge or Extruded Rubber
5.	ACI 530.1/ASCE 6	Specifications for Masonry Structures

1.04 SUBMITTALS

A. In accordance with the procedures and requirements set forth in Section 01300, Submittals, submit the following:

1. Provide manufacturer's complete product data.

2. Provide manufacturer's certification attesting compliance of material and source of each material specified below.

PART 2 -- PRODUCTS

2.01 ACCEPTABLE MANUFACTURERS FOR MASONRY REINFORCEMENT

A. Subject to compliance with the Specifications, provide products manufactured by the following:

1. AA Wire Products, Company, Chicago, IL

2. Dur-O-Wal, Inc., Arlington Heights, IL

3. Heckmann Building Products, Inc., Chicago, IL.

4. Holman and Barnard, Inc., Hauppauge, NY.

2.02 MATERIALS

A. Multi Wythe Joint Reinforcement

Steel ladder type reinforcement conforming to ASTM A 951 with adjustable pintel and eye assembly; 3/16 inch side rods and 9 gauge continuous cross rods; manufactured with wire conforming to ASTM A1064/1064M, with widths 2-inches less than nominal wall thickness. Provide seismic clip with 9 gauge continuous wire.

B. Single Wythe Joint Reinforcement

Steel ladder type reinforcement conforming to ASTM A 951 with 3/16 inch side rods and 9 gauge continuous cross rods; manufactured with wire conforming to ASTM A1064/1064M, with widths 2-inches less than nominal wall thickness.

C. Anchors: Cast into concrete or weld to steel.

1. Dovetail Slot shall be 1 inch back by 1 inch deep by 5/8 inch throat, 22 gauge, foam filled.

2. Dovetail Anchor - accessory for anchoring triangular flexible tie to dovetail slot, shall be 12 gage by 1 inch wide 1/2 inch long dovetail section.

3. Wire/Strap Anchor - 1/4 inch wire or 12 gauge x 3/4 inch x length required, welded or mechanically attached to back up structure.

D. Ties

1. Triangular Flexible Tie: 3/16 inch wire, sized to suit application.

2. Adjustable Tie: Pintel and eye full tie; properly sized for application, 3/16 inch cold drawn steel.

E. Seismic Clip and Continuous Wire

1. Seismic clip shall be impact resistant PVC with retaining ridges to accept continuous wire.

2. Continuous wire shall be 9 gauge galvanized steel.

F. Top of Wall Anchor

1. Top of wall anchor shall be a 3/8” diameter rod welded to a 3/16” plate with two anchor holes. Provide a plastic tube to allow vertical deflection.

G. Finish

1. Reinforcements, anchorages and ties shall be hot dipped galvanized, Class B-2, after fabrication in accordance with ASTM A153.

2.03 ACCESSORIES

A. Expansion and Joint Filler Material

1. Closed cell neoprene material conforming to ASTM D 1056, with a minimum compressibility of 50%. Horizontal joint filler shall be 1/4 inch thick. Expansion joints shall be a minimum 3/8" thick.

B. Weep and Vent Holes

1. Open head joints for brick and half-head joints for concrete masonry veneer.

C. Control Joint

1. Wide flange rapid preformed neoprene or PVC gasket.

D. Hardware Cloth

1. Waterproof paper backed with 1/2 inch hardware cloth.

E. Through Wall Flashing

1. Self-sealing, fully adhering composite flashing consisting of 32 mil rubberized asphalt bonded to an 8 mil cross laminated polyethylene film to produce an overall 40 mil thickness.

2. Provide Perm-A-Barrier Wall Flashing by W.R. Grace, Flash-Bond by Wire-Bond or Poly-Barrier Wall Flashing by Polytite Manufacturing Corporation.

F. Cavity Drainage Mat

1. CavClear Masonry Mat by CavClear, Hudson WI. Or approved equal. Description: Fluid conducting, non-absorbent, mold and mildew resistant polymer

mesh consisting of 100% recycled polymer with PVC binder. Thickness of actual air space minus tolerances recommended by manufacturer.

PART 3 -- EXECUTION

3.01 REINFORCEMENT AND ANCHORAGE

A. In masonry wall panels, place horizontal joint reinforcement at a vertical spacing of 16 inches on center, unless otherwise noted.

B. Lap side rods at each end joint a minimum of 6 inches.

C. Install prefabricated corner and tee assemblies at each wall corner and intersection.

D. Mitre and butt end joints are prohibited.

E. Place horizontal joint reinforcement in approximate center of out-to-out wall assembly and assuring a 5/8 inch, minimum, mortar coverage on exterior face and 1/2 inch on interior face.

F. Adjustable anchor assemblies may be offset no more than that which is stated in manufacturer's published instructions. Pintles may be installed either up or down.

G. Install horizontal joint reinforcement continuous, terminating only at vertical control joints.

H. Place masonry joint reinforcement in first and second horizontal joints above and below openings. Extend 24 inches minimum each side of opening.

I. Place joint reinforcement continuous and at 8 inches on center vertically above roof.

J. Place reinforcing bars supported and secured against displacement. Maintain position with ½ inch to true dimension.

K. Coordinate and verify that dowels and anchorages embedded in concrete and attached to structural steel members are properly placed.

L. Provide wall ties for masonry veneer at maximum 16 inches on center vertically and 16 inches on center horizontally. Place at maximum 8 inches on center each way around perimeter of openings, within 12 inches of openings.

M. Masonry adjacent to steel and concrete columns to be attached to the column with masonry anchors at 16 inches on center. Anchors to be attached to each face of the column which is adjacent to a masonry wall, unless otherwise noted.

3.02 DOVETAIL SLOTS AND ANCHORS

A. Provide dovetail slots to concrete contractor for placement into the concrete construction. Dovetail slots shall be placed vertically and spaced 16 inches on center horizontally.

B. Remove slot filler after forms are removed.

C. Hook dovetail anchor into slots and set in masonry joints at 16 inches on center.

3.03 BENDING, CUTTING AND SPLICING REINFORCEMENT

A. Make bends and splices in reinforcement only where indicated, or prior-approval by Engineer. Bend reinforcement only when cold, and prior to any placement in construction, forming around a steel pin of diameter at least 6 times the reinforcement size. Cut bars only by approved sawing, shearing or welding methods. Make ends of reinforcement straight, square, clean and free of defects before splicing. Do not heat or weld bends and splices at points of maximum stress. Clip and bend any tie wires as required to direct the ends away from external surfaces of masonry walls.

B. Where welding is necessary, provide materials and perform welding in accordance with AWS requirements.

C. All lap splices to be 48 bar diameters, unless otherwise noted.

3.04 THROUGH WALL FLASHING

A. Clean areas to receive flashing. Surface shall be free of voids, spalled areas, or sharp protrusions. Concrete surfaces shall be cured a minimum of 7 days.

B. Apply Primer as recommended by manufacturer.

C. Apply flashing in strict accordance with manufacturer's instructions and recommendations. Sidelaps shall be a minimum of 2½ inches. End laps shall have a 6" minimum lap. Provide end dams at ends of lintels and other interruptions.

D. Seal flashing where vertical reinforcing penetrates flashing with a mastic approved for use by manufacturer.

3.05 CAVITY DRAINAGE MAT

A. Install cavity drainage mat in air-space between insulation and masonry veneer construction full height of cavity.

B. Cavity drainage mat shall be temporarily fastened in accordance with manufacturer’s instructions.

- END OF SECTION -

SECTION 04200 - UNIT MASONRY

PART 1 -- GENERAL

1.01 THE REQUIREMENT

A. Furnish labor, materials, equipment and appliances required for complete execution of Work shown on Drawings and specified work.

1. Principal items of work include:

a. Exterior masonry wall construction.

b. Interior masonry wall construction.

c. Installation of masonry reinforcement and accessories.

d. Masonry unit lintels.

e. Installing dampproofing, insulation, flashing and work required to be built into masonry work.

f. Building into masonry work all anchors, inserts, hangers and the like provided under other Sections.

g. Pointing and cleaning of exposed masonry surfaces.

1.02 REFERENCE SPECIFICATIONS, CODES AND STANDARDS

A. Without limiting the generality of the Specifications the Work shall conform to the applicable requirements of the following documents:

1. TMS 402/ACI 530/ASCE 5 — Building Code Requirements for Masonry Structures

2. ACI 530.1/ASCE 6 — Specifications for Masonry Structures

a) ACI 530.1/ASCE 6, jointly published by the American Concrete Institute and the American Society of Civil Engineers, hereafter referred to as ACI 530.1 shall be considered minimum specifications for all materials, workmanship, methods and techniques for all masonry work.

b) Obtain a copy of the above Specifications prior to beginning any work in this Section.

3. ASTM C62 — Standard Specification for Building Brick

4.	ASTM C90	Standard Specification for Load-Bearing Concrete Masonry Units
5.	ASTM C140	Standard Methods for Sampling and Testing Concrete Masonry Units
6.	ASTM C216	Standard Specification for Facing Brick
7.	ASTM C744	Standard Specification for Prefaced Concrete and Calcium Silicate Masonry Units
8.	ANSI A41.1 R70	Code Requirements for Masonry

1.03 SUBMITTALS

A. In accordance with the procedures and requirements set forth in Section 01300 – Submittals, submit the following:

1. Manufacturer's specifications and certifications of compliance to the Specifications, including results of tests on masonry units showing such compliance, for each type of masonry. Provide handling, storage, and installation instructions along with protection instructions. Indicate by transmittal that installer has received copies of each instruction.

1.04 DELIVERY, STORAGE AND HANDLING

A. Deliver materials in the manufacturer's original unbroken, undamaged and unopened packaging with labels bearing the name of the manufacturer and the product. Masonry units and brick shall be factory packaged and strapped, delivered to the site and stored on skids.

B. Store and handle materials to prevent inclusion of water or foreign matter and to prevent damage of any nature.

C. Distribute materials on floor slabs to prevent overloading. Designated live loads shown for floor shall not be exceeded.

PART 2 -- PRODUCTS

2.01 GENERAL

A. Provide special shape, type or size indicated or for application requiring a form, size or finish which cannot be produced from standard masonry units by sawing. Provide solid units where masonry unit is exposed.

B. Masonry units for fire-rated walls shall comply with Underwriter's Laboratory requirements for fire rating shown on the Drawings.

2.02 MATERIALS

A. Mortar

1. In accordance with Section 04100 - Mortar and Masonry Grout

B. Concrete Masonry Units

1. Provide units conforming to ACI 530.1 unless otherwise specified.

2. Provide light weight units meeting the requirements of ASTM C90 for hollow and solid load bearing CMU.

3. Manufacture units of Portland Cement, conforming to ASTM C-150 and light weight aggregate conforming to ASTM C331 and ASTM C33. Weight of unit shall not exceed 105 lb. per cu. ft. when measured in accordance with provisions of ASTM C140. Units shall be nominally 8 inches x 16 inches x thicknesses shown or as required. Masonry units shall be manufactured not less than 30 days prior to being used and stored under cover until shipment. All units shall have true, sharp edges and corners, free from cracks or other defects. Provide half special sizes and shapes as required by the Drawings or to meet job conditions.

4. Net area compressive strength of concrete masonry units shall be a minimum of 2,000 psi when tested in accordance with ASTM C140. Compressive strength of masonry (f'm) shall be a minimum of 2,000 psi in accordance with ACI 530.1 when these units are used with the mortar specified in Section 04100.

C. Concrete Masonry Lintels

Specially formed units with reinforcing bars and grout fill provided where shown and wherever openings in masonry are indicated without structural steel or other supporting lintels.

PART 3 -- EXECUTION

3.01 GENERAL

A. Examine areas and conditions under which masonry is to be installed and notify the Engineer in writing of conditions detrimental to the proper and timely completion of the work. Do not proceed until unsatisfactory conditions have been corrected.

B. Do not wet concrete masonry units.

C. Brick having absorption rates in excess of 0.025 oz. per square inch per minute (as determined per ASTM C 67) shall be wetted sufficiently so that the rate of absorption, when brick is laid, does not exceed this amount.

D. Clean reinforcing, removing loose rust, ice or other coatings from bars, before placement.

E. Thickness of cavity and composite walls, and other masonry construction shall be the full thickness shown. Build single wythe walls to the actual size of masonry units.

F. Build chases and recesses as shown and as required for the work of other trades.

G. Build other work into masonry work as shown, fitting masonry units around other work and grouting to assure anchorage.

H. Cut masonry units with motor driven saw designed to cut masonry with clean, sharp, unchipped edges. Cut units as required to provide pattern shown or specified, and to fit adjoining work neatly.

I. Cold and hot weather construction.

1. No masonry shall be erected when ambient temperature has dropped below 45°F unless it is rising and at no time when it has dropped below 40°F. Provisions shall be made for heating and drying of materials, and the complete work shall be protected in accordance with the ACI 530.1/ASCE 6 Section 2.3.2.2. Masonry shall not be laid with ice or frost on its surfaces, and no masonry shall be laid on frozen work. Any work which freezes before the mortar has set shall be removed and replaced at the Contractor's own expense. Do not use any admixtures or antifreeze in the mortar.

2. When the temperature is above 100°F or 90°F with a wind velocity greater than 8 mph, mortar beds shall be spread no more than 4 feet ahead of masonry and masonry units shall be set within one minute of spreading mortar.

3.02 CONSTRUCTION TOLERANCES

A. Variation from plumb: For vertical lines and surfaces of columns, walls and arises do not exceed 1/4" in 10', or 3/8" in a story height not to exceed 20', nor 1/2" in 40' or more. For external corners, expansion joints, control joints and other conspicuous lines, do not exceed 1/4" in any story or 20' maximum, nor 1/2" in 40' or more. For vertical alignment of head joints do not exceed plus or minus 1/4" in 10', 1/2" maximum.

B. Variation from level: For bed joints and lines of exposed lintels, sills, parapets, horizontal grooves and other conspicuous lines do not exceed 1/4" in any bay or 20' maximum, nor 1/2" in 40' or more. For top surface of bearing walls do not exceed 1/8" between adjacent floor elements in 10' or 1/16" within width of a single unit.

C. Variation of Linear Building Line: For position shown on plan and related portion of columns, walls, and partitions, do not exceed 1/2" in any bay or 20' maximum, nor 3/4" in 40' or more.

D. Variation in Cross Sectional Dimensions: For columns and thickness of walls, from dimensions shown, do not exceed minus 1/4" nor plus 1/2".

E. Variation in Mortar Joint Thickness: Do not exceed bed joint thickness indicated by more than plus or minus 1/8", with a maximum thickness limited to 1/2". Do not exceed head joint thickness indicated by more than plus or minus 1/8".

3.03 LAYING MASONRY WALLS

A. Layout walls in advance for accurate spacing of surface bond patterns, with uniform joint widths and to properly locate openings, movement-type joints, returns and offsets. Avoid the use of less-than-half size units at corners, jambs, and wherever possible at other locations.

B. Lay-up walls to comply with specified construction tolerances, with courses accurately spaced and coordinated with other work.

C. Pattern Bond: Lay exposed masonry in the bond pattern shown or, if not shown, lay in running bond with vertical joint in each course centered on units in courses above and below.

D. Stopping and Resuming Work: Rack back 1/2 unit length in each course; do not tooth. Clean exposed surfaces of set masonry, wet units lightly, and remove loose masonry units and mortar prior to laying fresh mortar.

E. Cover top of walls at the end of each day. Protect wall from water infiltration from the top until wall is capped.

F. Built-In Work: As work progresses, build-in items specified under this and other sections of these Specifications. Fill in solidly with masonry around built-in items.

   1. Fill space between hollow metal frames and masonry solidly with mortar, unless otherwise indicated.

   2. Where built-in items are to be embedded in cores of hollow masonry units, place a layer of hardware cloth in the joint below and rod grout into core.

   3. Fill cores in hollow masonry units with grout 3 courses (24") under bearing plates, beams, lintels, posts and similar items, unless otherwise noted.

   4. Seal masonry tight around wall penetrations such as beams, joists, pipes, ducts, and conduit by cutting masonry units to fit as tightly as possible, then closing final gap all around with mortar, or joint filler and caulking as necessary.

3.04 MORTAR BEDDING AND JOINTING

A. Lay solid masonry units with completely filled bed and head joints; butter ends with sufficient mortar to fill head joints and shove into place. Do not slush head joints.

B. Lay hollow concrete masonry units with full mortar coverage on horizontal and vertical face shells; also bed webs with mortar in starting courses on footing or floors, and where adjacent cells are to be reinforced or filled with grout. For starting courses where cells are not grouted, spread full mortar bed including areas under cells.

C. Maintain joint widths of 3/8", except for minor variations required to maintain bond alignment.

D. Tooling: Joints shall be tooled to a uniform concave joint. Head joints first and then the bed joints.

E. Remove masonry units disturbed after laying; clean and reset in fresh mortar. Do not pound corners and jambs to shift adjacent stretcher units which have been set in position. If adjustments are required, remove units, clean and reset in fresh mortar.

3.05 JOINT REINFORCING

A. Use continuous horizontal joint reinforcement installed in horizontal mortar joints not more than 16" o.c. vertically.

B. Parapets: Use continuous horizontal joint reinforcement installed in horizontal joints at 8" o.c. vertically.

C. Reinforced masonry openings greater than 12" wide, with horizontal joint reinforcing placed in 2 horizontal joints immediately above the lintel and immediately below the sill. Extend reinforcements 2'-0" beyond jambs of the opening except at control joints.

D. Cut or interrupt joint reinforcement at control and expansion joints, unless otherwise indicated.

E. Provide continuity at corners and wall intersections by use of prefabricated "L" and "T" sections. Cut and bend reinforcement units as directed by manufacturer for continuity at returns, offsets, pipe enclosures and other special conditions.

F. Intersecting Load-bearing Walls: Provide rigid steel anchors at not more than 2'-0" o.c vertically. Embed ends in mortar-filled cores.

G. Non-loadbearing Interior Partitions: Build full height of story to underside of solid floor or structure above, unless shown otherwise. Fill joint with mortar after dead load deflection of structure above approaches final position.

3.06 CAVITY WALLS

A. Keep cavity clean of mortar droppings and other materials during construction. Strike joints facing cavity, flush.

B. Tie exterior wythe to back-up wythe of masonry with horizontal joint reinforcement at 16" o.c. vertically.

C. Coordinate placement of dampproofing and insulation board with work to ensure there are no gaps or air spaces between pieces of insulation board.

D. Weep joints shall be placed in exterior wythe of cavity wall, spaced a maximum of 32" o.c. horizontally, immediately above ledges, at lintels over openings, and as shown.

3.07 CAVITY WALL INSULATION

A. Provide and install insulation as shown and as specified in Section 07210, Building Insulation.

3.08 CONTROL AND EXPANSION JOINTS

A. General: Provide vertical and horizontal expansion, control and isolation joints in masonry where shown. Where not shown provide vertical control joints in concrete masonry units at 40 feet on center maximum or as recommended by the masonry unit manufacturer. Build-in related items as the masonry work progresses.

3.09 LINTELS

A. Install galvanized steel lintels where indicated.

B. Provide masonry lintels where shown and wherever openings of more than 8" for brick size units and 1'-4" for block size units are shown without structural steel or other supporting lintels. Provide precast or poured-in-place masonry lintels. Cure precast lintels before handling and installation. Temporarily support formed-in-place lintels.

C. For hollow concrete masonry unit walls, use specially formed "U"-shaped lintel units with reinforcement bars placed as shown and filled with grout.

D. Provide minimum bearing of 8" at each jamb.

3.10 FLASHING

A. Provide flashing as shown and as specified in Section 07600, Flashing and Sheet Metal.

3.11 REINFORCED UNIT MASONRY

A. Vertical reinforcement shall be held in place by means of frames or other suitable means. Place horizontal joint reinforcement as masonry work progresses. Provide minimum clear distance between longitudinal bars equal to nominal diameter of bar. Minimum thickness of mortar or grout between masonry and reinforcement shall be 1/4", except 6 gage or smaller wires may be laid in 3/8" mortar joints. Collar joints which contain both horizontal and vertical reinforcement shall have a minimum width of 1/2" larger than the diameter of the horizontal and vertical reinforcement.

B. Bar splices shall be contact lap splices. Length of splice shall be a minimum of 24" for #4 bars and 30" for #5 bars.

C. Low lift grouting shall be used when grout space is less than 2" in width. Place grout at maximum intervals of 24" in lifts of 6 to 8 inches as the work progresses. Cores to be grouted shall be clean of mortar, mortar dropping and debris. Agitate grout to assure complete filling and coverage of reinforcement. Hold grout 1-1/2 inches below to top of masonry if work is discontinued for more than an hour.

D. High lift grouting may be used when the grout space is greater than 2". Grout shall not be placed in lifts greater than 4 feet. Grout core shall be kept clean of mortar, mortar dripping and debris. Provide cleanout holes as required for inspection and cleaning.

Replace cleanout plugs after inspection and acceptance. Do not place grout until entire wall has been in place a minimum of 3 days. Hold grout 1-1/2 inches below top of masonry if work is discontinued for more than an hour.

E. Forms and shoring shall be substantial and tight to prevent leakage of mortar or grout. Brace and shore forms to maintain position and shape. Do not remove forms or shoring until masonry gains enough strength to sufficiently carry its own weight and any other loads, temporary or permanent, placed on it during construction.

3.12 PROTECTION OF WORK

A. Exposed masonry surfaces shall be protected from staining. Tops of wall shall be covered with nonstaining waterproof coverings when work is not in progress. Installed material shall be secure in high winds.

B. Protection shall be provided for all openings in the walls to prevent damage to sills, jambs, etc., from all causes. Aluminum or steel frames and other finish materials shall be protected from damage during masonry work.

3.13 REPAIR, POINTING AND CLEANING

A. Remove and replace masonry units which are loose, chipped, broken, stained or otherwise damaged, or if units do not match adjoining units as intended. Provide new units to match adjoining units and install fresh mortar or grout, pointed to eliminate evidence of replacement.

B. Pointing of Masonry: At the completion of the masonry work, all holes in exposed masonry shall be pointed. Defective joints shall be cut out and tuckpointed solidly with mortar. Pointing and tuckpointing shall be done with a pre-hydrated mortar. The mortar cement shall be controlled so that, after curing of the mortar, no difference in texture or color exists with that of adjacent masonry.

C. Masonry Cleaning: While laying masonry units, good workmanship and job housekeeping practices shall be used so as to minimize the need for cleaning the masonry work. Protect the base of the wall from mud splashes and mortar droppings. The technique for laying masonry shall be such that mortar does not run down the face of the wall or smear onto the face.

1. After the joints are tooled, cut off mortar failings with the trowel and brush excess mortar burrs and dust from the face of the masonry, use a bricklayer's brush made with medium soft hair.

2. Remove all large mortar particles with a hardwood scraper.

3. If, after using the above outlined techniques, additional cleaning of the walls is found necessary, allow the walls to cure one month prior to initiating further cleaning processes.

D. Clean masonry to comply with the masonry manufacturer's directions and applicable NCMA "Tek" bulletins or BIA technical notes and the following requirements.

1. Saturate the wall with clean water. The wall shall be thoroughly saturated prior to and at the time the cleaning solution is applied.

2. Clean masonry with an approved cleaning solution for each type of masonry applied with a brush, starting at the top of the wall. Approved cleaners shall be composed primarily of detergents, wetting agents, buffering agents, and a maximum of 10% muriatic acid. Do not use acids on masonry surfaces that will be damaged by use of an acid cleaner. The use of any of the above cleaning agents shall first be approved in writing by the manufacturer of the masonry being cleaned and the Engineer. The concentration, method of application of the cleaning solution, and method of scraping shall be as outlined on the container by the manufacturer.

3. High pressure water and sandblasting shall not be used for cleaning except with the recommendation of the masonry manufacturer and the written approval of the Engineer.

4. Immediately after cleaning a small area, the wall shall be rinsed thoroughly with quantities of water.

5. Protect adjacent surfaces and materials during masonry cleaning operations.

6. After the walls are cleaned, take the necessary precautions to ensure that other contractors and subcontractors do not damage or soil the walls. Mud protection around the base of walls shall be left in place until the grading work is done.

- END OF SECTION -

SECTION 05010 - METAL MATERIALS

PART 1 -- GENERAL

1.01 THE REQUIREMENT

A. Metal materials not otherwise specified shall conform to the requirements of this Section.

1.02 RELATED WORK SPECIFIED ELSEWHERE

A. Materials for fasteners shall be as specified in the Section entitled "Metal Fastening".

B. Requirements for specific products made from the materials specified herein are included in other sections of the Specifications. See the section for the specific item in question.

1.03 REFERENCE SPECIFICATIONS, CODES AND STANDARDS

ASTM A36	Standard Specification for Structural Steel
ASTM A47	Standard Specification for Malleable Iron Castings
ASTM A48	Standard Specification for Gray Iron Castings
ASTM A53	Standard Specification for Pipe, Steel, Black and Hot-Dipped, Zinc-Coated Welded and Seamless
ASTM A167	Standard Specification for Stainless and Heat-Resisting Chromium-Nickel Steel Plate, Sheet, and Strip
ASTM A276	Standard Specification for Stainless and Heat-Resisting Steel Bars and Shapes
ASTM A307	Standard Specification for Carbon Steel Externally Threaded Standard Fasteners
ASTM A446	Standard Specification for Steel Sheet, Zinc-Coated (Galvanized) by the Hot-Dip Process, Structural (Physical) Quality
ASTM A500	Standard Specification for Cold-Formed Welded and Seamless Carbon Steel Structural Tubing in Rounds and Shapes
ASTM A501	Standard Specification for Hot-Formed Welded and Seamless Carbon Steel Structural Tubing
ASTM A529	Standard Specification for Structural Steel with 42 000 psi (290 Mpa) Minimum Yield Point (1/2 in. (12.7 mm) Maximum Thickness)

ASTM A536	Standard Specification for Ductile Iron Castings
ASTM A570	Standard Specification for Hot-Rolled Carbon Steel Sheet and Strip, Structural Quality
ASTM A572/A572M-94C	Standard Specification for High Strength Low-Alloy Columbium-Vanadium Structural Steel Grade 50
ASTM A666	Standard Specification for Austenitic Stainless Steel, Sheet, Strip, Plate, and Flat Bar for Structural Applications
ASTM A992	Standard Specification for Structural Steel Shapes
ASTM B26	Standard Specification for Aluminum-Alloy Sand Castings
ASTM B85	Standard Specification for Aluminum-Alloy Die Castings
ASTM B108	Standard Specification for Aluminum-Alloy Permanent Mold Castings
ASTM B138	Standard Specification for Manganese Bronze Rod, Bar, and Shapes
ASTM B209	Standard Specification for Aluminum-Alloy Sheet and Plate
ASTM B221	Standard Specification for Aluminum-Alloy Extruded Bars, Rods, Wire, Shapes and Tubes
ASTM B308	Standard Specification for Aluminum-Alloy Standard Structural Shapes, Rolled or Extruded
ASTM B574	Standard Specification for Nickel-Molybdenum-Chromium Alloy Rod
ASTM F468	Standard Specification for Nonferrous Bolts, Hex Cap Screws, and Studs for General Use

1.04 SUBMITTALS

A. Material certifications shall be submitted along with any shop drawings for metal products and fabrications required by other sections of the Specifications.

1.05 QUALITY ASSURANCE

A. Owner may engage the services of a testing agency to test any metal materials for conformance with the material requirements herein. If the material is found to be in conformance with Specifications the cost of testing will be borne by the Owner. If the material does not conform to the Specifications, the cost of testing shall be paid by the Contractor and all materials not in conformance as determined by the Engineer shall be replaced by the Contractor at no additional cost to the Owner. In lieu of replacing materials

the Contractor may request further testing to determine conformance, but any such testing shall be paid for by the Contractor regardless of outcome of such testing.

PART 2 -- PRODUCTS

2.01 CARBON AND LOW ALLOY STEEL

A. Material types and ASTM designations shall be as listed below:

1.	Structural W Shapes	A 992 (50 ksi)
2.	Structural S, M, C, L Shapes	A 36 (36 ksi)
3.	Structural HP shape	A 572, Grade 50 (50 ksi)
4.	Structural Tubing	A 500, Grade B or A 501 (42 ksi)
5.	Structural Pipe	A 53, Type E or S, Grade B (35 ksi)
6.	Plates and Bars	A 36 U.N.O. (36 ksi)
7.	Sheet Steel	A 570, Grade C
8.	Cold-Formed Structural Studs and Joists (18-22 gauge)	A 446, Grade C
9.	Cold-Formed Structural Studs and Joists (12-16 gauge)	A 446 Grade D

2.02 STAINLESS STEEL

A. All stainless steel fabrications shall be Type 316.

B. Material types and ASTM designations are listed below:

1.	Plates and Sheets	ASTM A167 or A666 Grade A
2.	Structural Shapes	ASTM A276

2.03 ALUMINUM

A. All aluminum shall be alloy 6061-T6, unless otherwise noted or specified herein.

B. Material types and ASTM designations are listed below:

1.	Structural Shapes	ASTM B308
2.	Castings	ASTM B26, B85, or B108
3.	Extruded Bars	ASTM B221 - Alloy 6061
4.	Extruded Rods, Shapes and Tubes	ASTM B221 - Alloy 6063

5. Plates — ASTM B209 - Alloy 6061

6. Sheets — ASTM B221 - Alloy 3003

C. All aluminum structural members shall conform to the requirements of the Section entitled "Structural Aluminum".

D. All aluminum shall be provided with mill finish unless otherwise noted.

E. Where bolted connections are indicated, aluminum shall be fastened with Type 316 stainless steel bolts.

F. Aluminum in contact with dissimilar materials shall be insulated with an approved dielectric.

2.04 CAST IRON

A. Material types and ASTM designations are listed below:

1. Gray — ASTM A48 Class 30B

2. Malleable — ASTM A47

3. Ductile — ASTM A536 Grade 60-40-18

2.05 BRONZE

A. Material types and ASTM designations are listed below:

1. Rods, Bars and Sheets — ASTM B138 - Alloy B Soft

2.06 HASTELLOY

A. All Hastelloy shall be Alloy C-276.

PART 3 – EXECUTION (NOT USED)

- END OF SECTION –

SECTION 05050 - METAL FASTENING

PART 1 - GENERAL

1.01 THE REQUIREMENT

A. Furnish all materials, labor, and equipment required to provide all metal welds and fasteners not otherwise specified, in accordance with the Contract Documents.

1.02 REFERENCE SPECIFICATIONS, CODES, AND STANDARDS

A. Without limiting the generality of the other requirements of the specifications, all work herein shall conform to the applicable requirements of the following documents. All referenced specifications, codes, and standards refer to the most current issue available at the time of Bid.

1. Florida Building Code

2.	AC 193	Acceptance Criteria for Mechanical Anchors in Concrete Elements
3.	AC 308	Acceptance Criteria for Post-Installed Adhesive Anchors in Concrete Elements
4.	ACI 318	Building Code Requirements for Structural Concrete
5.	ACI 355.2	Qualifications of Post-Installed Mechanical Anchors in Concrete
6.	AISC 348	The 2009 RCSC Specification for Structural Joints
7.	AISC	Specification for Structural Joints Using ASTM A325 or A490 Bolts.
8.	AISC	Code of Standard Practice
9.	AWS D1.1	Structural Welding Code - Steel
10.	AWS D1.2	Structural Welding Code – Aluminum
11.	AWS D1.6	Structural Welding Code – Stainless Steel
12.	Aluminum Association	Specifications for Aluminum Structures
13.	ASTM A572/ A572M-94C	Standard Specification for High Strength Low-Alloy Columbium-Vanadium Structural Steel Grade 50
14.	ASTM A36	Standard Specification for Carbon Structural Steel
15.	ASTM A307	Standard Specification for Carbon Steel Externally Threaded Standard Fasteners

16. ASTM A325 Standard Specification for High-Strength Bolts for Structural Steel Joints

17. ASTM E488 Standard Test Methods for Strength of Anchors in Concrete and Masonry Elements

18. ASTM F436 Standard Specification for Hardened Steel Washers

19. ASTM A489 Standard Specification for Eyebolts

20. ASTM A490 Standard Specification for Quenched and Tempered Alloy Steel Bolts for Structural Steel Joints

21. ASTM A563 Standard Specifications for Carbon and Alloy Steel Nuts

22. ASTM F593 Standard Specification for Stainless Steel Bolts; Hex Cap Screws, and Studs

23. ASTM F594 Standard Specification for Stainless Steel Nuts

24. ASTM D1785 Standard Specification for Polyvinyl Chloride (PVC) Plastic Pipe

25. ASTM F1554 Standard Specification for Anchor Bolts, Steel, 36, 55, and 105-ksi Yield Strength

1.04 SUBMITTALS

A. Submit the following in accordance with the Section entitled “Submittals”.

1. Shop Drawings providing the fastener's manufacturer and type and certification of the fastener's material and capacity.

2. Manufacturer’s installation instructions.

3. Welder certifications for each person who is to perform field welding. Certifications shall be from a recognized testing laboratory.

4. Certified weld inspection reports, when required.

5. Welding procedures.

6. Installer qualifications

7. Certification of Installer Training

8. Inspection Reports

9. Results of Anchor Proof Testing

10. For outdoor equipment, anchorage calculations to resist design wind loads, signed

and sealed by a Professional Engineer registered in the State of Florida.

1.05 QUALITY ASSURANCE

A. Fasteners not manufactured in the United States shall be tested and certification provided with respect to specified quality and strength standards. Certifications of origin shall be submitted for all U.S. fasteners supplied on the project.

B. Installer Qualifications: Drilled-in anchors shall be installed by an Installer with at least three years of experience performing similar installations. Installer shall be certified as an Adhesive Anchor Installer in accordance with ACI-CRSI Adhesive Anchor Installation Certification Program.

C. Installer Training: Conduct a thorough training with the manufacturer or the manufacturer's representative for the Installer on the project. Training shall consist of a review of the complete installation process for drilled-in anchors, to include but not be limited to the following:

1. Hole drilling procedure.

2. Hole preparation and cleaning technique.

3. Adhesive injection technique and dispenser training/maintenance.

4. Rebar doweling preparation and installation.

5. Proof loading/torquing.

D. All steel welding shall be performed by welders certified in accordance with AWS D1.1. All aluminum welding shall be performed by welders certified in accordance with AWS D1.2. Certifications of field welders shall be submitted prior to performing any field welds.

E. Welds and high strength bolts used in connections of structural steel will be visually inspected in accordance with Article 3.04.

F. The Owner may engage an independent testing agency to perform testing of welded connections and to prepare test reports in accordance with AWS. Inadequate welds shall be corrected or redone and retested to the satisfaction of the Engineer and/or an acceptable independent testing laboratory, at no additional cost to the Owner.

G. Provide a welding procedure for each type and thickness of weld. For welds that are not prequalified, include a Performance Qualification Report. The welding procedure shall be given to each welder performing the weld. The welding procedure shall follow the format in Annex E of AWS D1.1 with relevant information presented.

PART 2 - PRODUCTS

2.01 ANCHOR RODS (ANCHOR BOLTS)

A. Unless shown otherwise on the Drawings, all anchor bolts shall be Type 316 stainless steel conforming to ASTM F-593.

B. Anchor bolts for the pump bases shall be sized and furnished by the pump manufacturer. Materials for pump base anchor bolts shall be selected by the pump manufacturer.

C. Nuts shall conform to ASTM F-594, alloy 316.

D. Where anchor rods are used to anchor galvanized steel or are otherwise specified to be galvanized, anchor rods and nuts shall be hot-dip galvanized in accordance with ASTM F1554.

E. Where pipe sleeves around anchor rods are shown on the Drawings, pipe sleeves shall be cut from Schedule 80 PVC plastic piping meeting the requirements of ASTM D1785, unless noted otherwise.

F. Equipment manufacturers, fabricators, and suppliers shall design and furnish anchor bolts as required to install the supplied units. The anchor bolt layout shall be coordinated with concrete work as specified herein.

G. Drilled in type anchor bolts, either adhesive types or mechanical types shall not be used unless approved in writing by the manufacturer/fabricator of equipment or covers, subject to acceptance by the ENGINEER. All operating pieces of equipment such as pumps, generators, motors etc. shall not be anchored with wedge anchors or other mechanical anchors. Drilled in type anchor bolts shall be Type 316 stainless steel. Drilled in type anchor bolts are specified under Article 2.04 of this Section entitled "Concrete Anchors".

2.02 HIGH STRENGTH BOLTS

A. High strength bolts and associated nuts and washers shall be in accordance with ASTM A325 or ASTM A490. Bolts, nuts and washers shall meet the requirements of AISC "Specification for Structural Joints Using ASTM A325 or A490 Bolts".

B. Where high strength bolts are used to connect galvanized steel or are otherwise specified to be galvanized, bolts, nuts, and washers shall be hot-dip galvanized in accordance with ASTM A325.

2.03 STAINLESS STEEL BOLTS

A. Stainless steel bolts shall conform to ASTM F-593. All underwater fasteners shall be Type 316 stainless steel. Unless otherwise specified, fasteners for aluminum and stainless steel members shall be Type 316 stainless steel.

B. Stainless steel bolts shall have hexagonal heads with a raised letter or symbol on the bolts indicating the manufacturer, and shall be supplied with hexagonal nuts meeting the requirements of ASTM F594. Nuts shall be of the same alloy as the bolts.

2.04 CONCRETE ANCHORS

A. General

1. Where concrete anchors are called for on the Drawings, one of the types listed below shall be used; except, where one of the types listed below is specifically called for on the Drawings, only that type shall be used. Unless otherwise noted, all concrete anchors which are submerged, or are used in hanging items or have direct tension induced upon them, or which are subject to vibration from equipment such as pumps and generators, shall be adhesive anchors. The determination of anchors equivalent to those listed below shall be on the basis of test data performed by an approved independent testing laboratory. There are two types used:

   a. Expansion anchors shall be mechanical anchors of the wedge, sleeve, drop-in or undercut type.

   b. Adhesive anchors shall consist of threaded rods or bolts anchored with an adhesive system into hardened concrete. Adhesive anchors shall be two part injection type using the manufacturer's static mixing nozzle and shall be supplied as an entire system.

2. Expansion anchors shall not be used to hang items from above or in any other situation where direct tension forces are induced in anchor.

3. Unless otherwise noted, all concrete anchors which are submerged or are used in hanging items or have direct tension induced upon them, or which are subject to vibration from equipment such as pumps and generators, shall be adhesive anchors.

4. Adhesive anchors shall conform to the requirements of ACI 355.4 or alternately to AC308. Expansion or mechanical anchors shall conform to the requirements of ACI 355.2 or alternately to AC 193.

5. All anchors installed within fire resistant construction shall either be enclosed in a fire resistant envelope, be protected by approved fire-resistive materials, be used to resist wind loads only, or anchor non-structural elements.

B. Concrete Anchor Design: An anchor design consists of specifying anchor size, quantity, spacing, edge distance and embedment to resist all applicable loads. Where an anchor design is indicated on the Drawings, it shall be considered an engineered design and anchors shall be installed to the prescribed size, spacing, embedment depth and edge distance. If all parts of an anchor design are provided on the Drawings except embedment depth, the anchors will be considered an engineered design and the CONTRACTOR shall provide the embedment depth as indicated in Paragraph B.3 unless otherwise directed by JEA. Where an anchor design is not indicated on the Drawings, the CONTRACTOR shall provide the anchor design per the requirements listed below.

1. Structural Anchors: All concrete anchors shall be considered structural anchors if they transmit load between structural elements; transmit load between non-structural components that make up a portion of the structure and structural elements; or transmit load between life-safety related attachments and structural elements. Examples of structural concrete anchors include but are not limited to column anchor bolts, anchors supporting non-structural walls, sprinkler piping support anchors, anchors supporting heavy, suspended piping or equipment, anchors supporting barrier rails, etc. For structural anchors, the CONTRACTOR shall submit an engineered design with signed and sealed calculations performed by an Engineer currently registered in the State of Florida. Structural anchors shall be of a type recommended by the anchor manufacturer for use in cracked concrete and shall be designed by the Contractor in accordance with ACI 318 Appendix D.

2. Non-Structural Anchors: All other concrete anchors may be considered non-structural concrete anchors. The CONTRACTOR shall perform an engineered design for non-structural anchors. JEA may request the CONTRACTOR provide anchor design details for review, but submission of a signed, sealed design is not required. Non-structural anchors shall be designed by the contractor for use in uncracked concrete.

3. Minimum anchor embedment shall be as indicated on the Drawings or determined by the CONTRACTOR's engineered design. Concrete anchors shall be embedded no less than the manufacturer's standard embedment (expansion or mechanical anchors) or to provide a minimum allowable bond strength equal to the allowable yield capacity of the rod/bolt (adhesive anchors).

C. Structural Anchors:

1. Mechanical Anchors:

a. Wedge Anchors: Wedge anchors shall be "Kwik Bolt TZ" by Hilti, Inc., "TruBolt +" by ITW Redhead, "Strong-Bolt" or "Strong-Bolt 2" by Simpson Strong-Tie Co. or "Powerstud SD-1" or "Powerstud SD-2" by Powers Fasteners.

b. Screw Anchors: Screw anchors shall be "Kwik HUS-EZ" and "KWIK HUS-EZ-I" by Hilti, Inc., "Titen HD" by Simpson Strong-Tie Co., or "Wedge-Bolt +" by Powers Fasteners. Bits specifically provided by manufacturer of chosen system shall be used for installation of anchors.

c. Sleeve Anchors: Sleeve anchors shall be "HSL-3 Heavy Duty Sleeve Anchor" by Hilti, Inc. or "Power-Bolt +" by Powers Fasteners.

d. Undercut Anchors: Undercut anchors shall be "HDA Undercut Anchor" by Hilti, Inc., "Torq-Cut Undercut Anchor" by Simpson Strong-Tie Co., "Atomic + Undercut Anchor" by Powers Fasteners

2. Adhesive Anchors:

a. Adhesive anchors shall be “Epcon G5” by ITW Redhead, “HIT HY-150 Max SD” by Hilti, Inc., “SET-XP” by Simpson Strong-Tie Co., or “Powers 1000+” by Powers Fasteners.

b. Structural adhesive anchor systems shall be IBC compliant and capable of resisting short term wind and seismic loads (Seismic Design Categories A through F) as well as long term and short term sustained static loads in both cracked and uncracked concrete in all Seismic Design Categories. Structural adhesive anchor systems shall comply with the latest revision of ICC-ES Acceptance Criteria AC308, and shall have a valid ICC-ES report in accordance with the applicable building code. No or equal products will be considered unless prequalified and approved by the Engineer and JEA.

D. Non-Structural Anchors: In addition to the acceptable non-structural anchors listed below, all structural anchors listed above may also be used as non-structural anchors.

1. Mechanical Anchors:

a. Wedge Anchors: Wedge anchors shall be “Kwik Bolt 3” by Hilti, Inc. or “TruBolt” by ITW Redhead.

b. Screw Anchors: Screw anchors shall be “Kwik HUS” by Hilti, Inc., “Wedge-Bolt” by Powers Fasteners or “Large Diameter Tapcon (LDT) Anchor” by ITW Redhead. Bits specifically provided by manufacturer of chosen system shall be used for installation of anchors.

c. Sleeve Anchors: Sleeve anchors shall be “HSL Heavy Duty Sleeve Anchors” by Hilti, Inc. “Power-Bolt” by Powers Fasteners or “Dynabolt Sleeve Anchor” by ITW Redhead.

d. Drop-In Anchors: Drop-in anchors shall be “Drop-In” by Simpson Strong-Tie Co., “HDI Drop-In Anchor” by Hilti, Inc. or “Multi-Set II Drop-In Anchor” by ITW Redhead.

e. Undercut Anchors: Undercut anchors shall be “HDA Undercut Anchor” by Hilti, Inc.

2. Adhesive Anchors:

a. Adhesive anchors shall be “Epcon A7” or “Epcon C6” by ITW Redhead, “HIT HY-150 Max” by Hilti, Inc., “SET Epoxy Tie” or “AT” by Simpson Strong-Tie Co., or “Powers AC 100+ Gold” or “T308+ Epoxy” by Powers Fasteners.

b. Non-structural adhesive anchors systems shall be IBC compliant and capable of resisting short term wind and seismic (Seismic Design

Categories A and B) as well as long term and short term sustained static loads in uncracked concrete

c. Non-structural adhesive anchor embedment depth of the rod/bolt shall provide a minimum allowable bond strength that is equal to the allowable yield capacity of the rod/bolt unless noted otherwise on the Drawings.

d. No or equal products will be considered unless prequalified and approved by the Engineer and JEA.

E. Concrete Anchor Rod/Bolt Materials:

1. Concrete anchors used to anchor structural steel shall be a threaded steel rod per manufacturer's recommendations for proposed adhesive system, but shall not have a yield strength (fy) less than 58 ksi nor an ultimate strength (fu) less than 72.5 ksi, unless noted otherwise. Where steel to be anchored is galvanized, concrete anchors shall also be galvanized unless otherwise indicated on the Drawings.

2. Concrete anchors used to anchor aluminum, FRP, or stainless steel shall be Type 304 stainless steel unless noted otherwise. All underwater concrete anchors shall be Type 316 stainless steel.

3. Nuts, washers, and other hardware shall be of a material to match the anchors.

2.05 MASONRY ANCHORS

A. Anchors for fastening to solid or grout-filled masonry shall be adhesive anchors as specified above for concrete anchors.

B. Anchors for fastening to hollow masonry or brick shall be adhesive anchors consisting of threaded rods or bolts anchored with an adhesive system dispensed into a screen tube inserted into the masonry. The adhesive system shall use a two-component adhesive mix and shall inject into the screen tube with a static mixing nozzle. Thoroughly clean drill holes of all debris and drill dust with nylon (not wire) brush prior to installation of adhesive and anchor. Contractor shall follow manufacturer's installation instructions. The adhesive system shall be "Epcon System A7 or C6" as manufactured by ITW Ramset/Redhead, "HIT HY-70 System" as manufactured by Hilti, Inc., "SET Epoxy-Tie" or "AT Acrylic-Tie" as manufactured by Simpson Strong-Tie Co., or "AC-100+ Gold by Powers Fasteners.

C. Masonry anchors used to anchor steel shall be of Type 316 stainless steel unless noted otherwise.

D. Masonry anchors used to anchor aluminum, FRP, or stainless steel shall be Type 316 stainless steel unless noted otherwise. All underwater anchors shall be Type 316 stainless steel.

2.06 WELDS

A. Electrodes for welding structural steel and all ferrous steel shall comply with AWS Code, using E70 series electrodes for shielded metal arc welding (SMAW), or F7 series electrodes for submerged arc welding (SAW).

B. Electrodes for welding aluminum shall comply with the Aluminum Association Specifications and AWS D1.2.

C. Electrodes for welding stainless steel and other metals shall comply with AWS code.

2.07 WELDED STUD CONNECTORS

A. Welded stud connectors shall conform to the requirements of AWS D1.1 Type C.

2.08 EYEBOLTS

A. Eyebolts shall conform to ASTM A489 unless noted otherwise.

2.09 HASTELLOY FASTENERS

A. Hastelloy fasteners and nuts shall be constructed of Hastelloy C-276.

2.10 ANTI-SEIZE LUBRICANT

A. Antiseize lubricant shall be Graphite 50 Anti-Seize by Loctite Corporation, 1000 Anti-Seize Paste by Dow Corning, 3M Lube and Anti-Seize by 3M, or equal.

PART 3 -- EXECUTION

3.01 MEASUREMENTS

A. The Contractor shall verify all dimensions and review the Drawings and shall report any discrepancies to the Engineer for clarification prior to starting fabrication.

3.02 BOLT INSTALLATION

A. Anchor Bolts, Concrete Anchors, and Masonry Anchors

1. Anchor bolts shall be installed in accordance with AISC "Code of Standard Practice" by setting in concrete while it is being placed and positioned by means of a rigidly held template.

2. The Contractor shall verify that all concrete and masonry anchors have been installed in accordance with the manufacturer's recommendations and that the capacity of the installed anchor meets or exceeds the specified safe holding capacity.

3. Concrete anchors shall not be used in place of anchor bolts without Engineer's approval.

4. All stainless steel threads shall be coated with antiseize lubricant.

B. High Strength Bolts

1. All bolted connections for structural steel shall use high strength bolts. High strength bolts shall be installed in accordance with AISC "Specification for Structural Joints, using A325 or A490 Bolts." All high strength bolts installed by the "turn-of-nut" method shall have the turned portion marked with reference to the steel being connected after the nut has been made snug and prior to final tightening. These marks will be considered in inspection.

2. All stainless steel bolts shall be coated with antiseize lubricant.

C. Concrete Anchors

1. Concrete at time of anchor installation shall be a minimum age of 21 days.

2. Concrete anchors designed by the Contractor shall be classified as structural or non-structural based on the requirements indicated above.

3. Concrete Anchor Testing:

a. At all locations where concrete anchors meet the requirements for structural anchors at least 25 percent of all concrete anchors installed shall be proof tested to the value indicated on the Drawings, with a minimum of one tested anchor per anchor group. If no test value is indicated on the Drawings but the installed anchor meets the requirements for structural anchors, the Contractor shall notify the Engineer to allow verification of whether anchor load proof testing is required.

b. Contractor shall submit a plan and schedule indicating locations of anchors to be tested, load test values and proposed anchor testing procedure (including a diagram of the testing equipment proposed for use) to the Engineer for review prior to conducting any testing. Testing of anchors shall be in accordance with ASTM E488 for the static tension test. If additional tests are required, inclusion of these tests shall be as stipulated on Contract Drawings.

c. Where Contract Documents indicate anchorage design to be the Contractor's responsibility and the anchors are considered structural per the above criteria, the Contractor shall submit a plan and schedule indicating locations of anchors to be proof tested and load test values, sealed by a Professional Engineer currently registered in the State of Florida. The Contractor's Engineer shall also submit documentation indicating the Contractor's testing procedures have been reviewed and the proposed procedures are acceptable. Testing procedures shall be in accordance with ASTM E488.

d. Concrete Anchors shall have no visible indications of displacement or damage during or after the proof test. Concrete cracking in the vicinity of the anchor after loading shall be considered a failure. Anchors exhibiting damage shall be removed and replaced. If more than 5 percent of tested anchors fail, then 100 percent of anchors shall be proof tested.

e. Proof testing of concrete anchors shall be performed by an independent testing laboratory hired directly by the Contractor and approved by the Engineer. The Contractor shall be responsible for costs of all testing, including additional testing required due to previously failed tests.

4. All concrete anchors shall be installed in strict conformance with the manufacturer's printed installation instructions. A representative of the manufacturer shall be on site when required by the Engineer.

5. All holes shall be drilled with a carbide bit unless otherwise recommended by the manufacturer. No cored holes shall be allowed unless specifically approved by the Engineer. If coring holes is allowed by the manufacturer and approved by the Engineer, cored holes shall be roughened in accordance with manufacturer requirements. Thoroughly clean drill holes of all debris and drill dust with compressed air followed by a wire brush prior to installation of adhesive and threaded rod/bolt unless otherwise recommended by the manufacturer. Degree of hole dampness shall be in strict accordance with manufacturer recommendations. Where depth of hole exceeds the length of the static mixing nozzle, a plastic extension hose shall be used to ensure proper adhesive injection from the back of the hole. Injection of adhesive into the hole shall utilize a piston plug to minimize the formation of air pockets. Wipe rod free from oil that may be present from shipping or handling.

D. Other Bolts

1. All dissimilar metal shall be connected with appropriate fasteners and shall be insulated with a dielectric or approved equal. Unless otherwise specified, where aluminum and steel members are connected together they shall be fastened with Type 316 stainless steel bolts and insulated with micarta, nylon, rubber, or equal.

3.03 WELDING

A. All welding shall comply with AWS Code for procedures, appearance, quality of welds, qualifications of welders and methods used in correcting welded work.

B. Welded stud connectors shall be installed in accordance with AWS D1.1.

3.04 INSPECTION

A. High strength bolting will be visually inspected in accordance with AISC "Specification for Structural Joints Using A325 or A490 Bolts." Rejected bolts shall be either replaced or retightened as required. In cases of disputed bolt installation, the bolts in question shall be checked by a calibrated wrench certified by an independent testing laboratory. The certification shall be at the Contractor's expense.

B. Field welds will be visually inspected in accordance with AWS Codes. Inadequate welds shall be corrected or redone as required in accordance with AWS Codes.

- END OF SECTION -

SECTION 05120 - STRUCTURAL STEEL

PART 1 -- GENERAL

1.01 THE REQUIREMENT

A. The CONTRACTOR shall furnish all equipment, materials, and services not otherwise specified for the fabrication, delivery, unloading, handling, storing, and erection of all structural steel work as shown on the Contract Documents.

1.02 RELATED WORK SPECIFIED ELSEWHERE

A. Section 05500 - Metal Fabrications

B. Section 09900 - Painting

1.03 REFERENCED SPECIFICATIONS, CODES, AND STANDARDS

A. Without limiting the generality of other requirements of these Specifications, all Work specified herein shall conform to or exceed the requirements of the Florida Building Code, and the applicable requirements of the following documents to the extent that the provisions of such documents are not in conflict with the requirements of this Section:

1. AISC - "Code of Standard Practice for Steel Buildings and Bridges."

2. AISC – “Specification for Structural Steel Buildings.”

3. AISC - "Specification for Design Fabrication and Erection of Structural Steel for Buildings", and including the "Commentary of the AISC Specification".

4. AISC - " Specification of Structural Joints Using ASTM A325 or A490 Bolts", as published by the American Institute of Steel Construction.

5. AWS - "Structural Welding Code", AWS Article D1.1 and "Standard Qualification Procedure", as published by American Welding Society.

1.04 SUBMITTALS

A. In accordance with the procedures and requirements set forth in Section 01300 entitled "Submittals", the CONTRACTOR shall submit the following:

1. Certified Mill Test Reports

2. Affidavit of Compliance with grade specified

3. Shop Drawings

4. Certified Weld Inspection Reports

B. All Shop Drawings shall include the following:

1. Layout drawings indicating all structural shapes, sizes, and dimensions.

2. Beam and column schedules.

3. Detail drawings indicating jointing and anchoring details.

4. All steel work, framing, and details shall conform to Article 1.03 of this Section.

C. No fabrication shall be started until Shop Drawings have been approved by the Engineer.

D. Where structural design of the steel is not indicated on the Drawings, the CONTRACTOR shall submit design drawings of the steel framing, connections and anchor bolts. Such drawings shall be signed and sealed by a Professional Engineer registered in the State of Florida.

1.05 QUALITY ASSURANCE

A. Shop inspection may be required by OWNER at his own expense. The CONTRACTOR shall give ample notice to the Engineer prior to the beginning of any fabrication work so that inspection may be provided. The CONTRACTOR shall furnish all facilities for the inspection of materials and workmanship in the shop, and the inspectors shall be allowed free access to the necessary parts of the works. Inspectors shall have the authority to reject any materials or Work which does not meet the requirements of these Specifications. Inspection at the shop is intended as a means of facilitating the Work and avoiding errors, but is expressly understood that it will in no way relieve the CONTRACTOR from his responsibility for furnishing proper materials or workmanship under this Specification.

B. OWNER may engage inspectors to inspect welded connections and to perform tests and prepare test reports.

1. Ten percent of all butt and bevel welds which extend continuously for 24 inches or less will be completely tested in accordance with AWS D1.1, Part B, Radiographic Testing of Welds, Chapter 6. All butt and bevel welds which extend continuously for more than 24 inches will be spot tested at intervals not exceeding 36 inches.

2. Welds that are required by the Engineer to be corrected shall be corrected or redone and retested as directed, at the CONTRACTOR's expense and to the satisfaction of the Engineer and/or an acceptable independent testing lab.

PART 2 -- PRODUCTS

2.01 MATERIAL INFORMATION

A. The term "Structural Steel" shall be as defined in the "Codes of Standard Practices for Steel Buildings and Bridges" of the American Institute of Steel Construction (AISC).

Included as "Structural Steel" shall be all stiffeners, plates, sag rods and other miscellaneous metal required for a complete installation.

2.02 MATERIALS

A. Structural Steel:

1. Structural steel shall conform to Specification Section 05010 entitled "Metal Materials". Certified mill test reports or certified reports of tests made by the fabricator or a testing laboratory in accordance with ASTM A6 and the governing specification shall constitute evidence of conformity with the above ASTM specification. Additionally, the fabricator shall, if requested, provide an affidavit stating that the structural steel furnished meets the requirements of the grade specified. Unidentified steel, if free from surface imperfections, may be used for parts of minor importance or for unimportant details where the precise physical properties of the steel and its weld-ability would not affect the strength of the structure. All other unidentified steel will be rejected and shall be removed from the site and replaced by the CONTRACTOR, all at the expense of the CONTRACTOR.

2. Structural steel pipe shall be ASTM A501, or ASTM A53, Type E or S, Grade B.

3. Structural tubing shall be ASTM A501, or A500, Grade B. All members shall be furnished full length without splices unless otherwise noted or accepted by the Engineer.

4. Structural steel shall be cleaned and coated with a shop paint primer; except, that primer shall be omitted for surfaces to be galvanized with no further coating. Surface preparation and primer shall be as specified in Section 09850 entitled "Painting". Shop prime coat shall be applied within eight hours after surface preparation. Shop applied primers shall be as specified in Section 09850 entitled "Painting".

B. Bolts: All fasteners are specified in Section 05050 entitled "Metal Fastening".

C. Rivet Steel: Rivet steel shall conform to the following Specification, Structural Rivet Steel, ASTM A502-1. Certified mill test reports shall constitute sufficient evidence of conformity with the Specifications.

D. Anchor Bolts: Anchor bolts for structural steel shall be of the size and configuration shown on the Drawings and shall conform to Section 05050 entitled "Metal Fastening".

E. Filler Metal for Welding: Welding electrodes for manual shielded metal arc welding shall conform to the Specifications for Mild Steel Covered Arc-Welding Electrodes, AWS A5.1. Bare electrodes and granular flux for the submerged-arc process shall conform to AWS-A5.17 as required for the conditions of actual use.

PART 3 -- EXECUTION

3.01 MEASUREMENT

A. The CONTRACTOR shall verify all dimensions and shall make any field measurements necessary and shall be fully responsible for accuracy and layout of Work. The CONTRACTOR shall review the Drawings and any discrepancies shall be reported to the Engineer for clarification prior to starting fabrication.

3.02 FABRICATION

A. General: Fabrication shall be in accordance with the American Institute for Steel Construction "Specification for the Design, Fabrication and Erection of Structural Steel for Buildings" of the AISC.

B. Anchor Bolts:

1. All anchor bolts for structural steel erection and other incidental items of the structural steel required to be built into concrete shall be properly set and securely held in position in the forms before the concrete is placed.

2. Anchor bolts and setting plans for steel columns shall be provided at the site, marked or tagged for ready identification.

3. Bolts shall be accurately set to template and at elevation to provide suitable projection above concrete and/or grout. Maximum tolerances allowable from indicated locations are: (tolerances may be tighter for manufactured/fabricated elements of work):

a. Elevation of concrete before grouting: ± 1/4 inch.

b. Elevation of top of anchor bolts: + 1/2 inch to 0 inch under.

c. Line of anchor bolt: ± 1/8 inch.

4. All holes in structural steel members required for anchors, anchor bolts, bolt holes, sag rods for securing wood or other members or for passing of other work noted on the drawings shall be provided by the fabricator and detailed on the Shop Drawings.

5. Where misalignment between anchor bolts and bolt holes in steel members are encountered, the Engineer shall be immediately notified. The CONTRACTOR shall submit a method to remedy the misalignment for review by the Engineer.

C. Material

1. All materials shall be properly worked and match-marked for field assembly. Where finishing is required, assembly shall be completed including bolting and welding of units before start of finishing operations.

3.03 ERECTION

A. The erection of all structural steel shall conform to the applicable requirements of the current edition of the "Specifications for the Design, Fabrication and Erection of Structural Steel for Buildings" of the ASIC. All temporary bracing, guys and bolts as may be necessary to ensure the safety of the structure until the permanent connections have been made shall be provided by the CONTRACTOR. High strength steel bolts shall conform to the Specifications of the Research Council on Riveted and Bolted Structural Joints of the Engineering Foundation for "Structural Joints using ASTM A325 or A490 Bolts".

B. Except where otherwise noted on the Drawings or in this Specification, all shop connections shall be welded. All field connections shall be accurately fitted up before being bolted. Drifting shall be only such as will bring the parts into position and shall not be sufficient to enlarge the holes or to distort the metal. All unfair holes shall be drilled or reamed.

C. High Strength Steel Bolts:

1. All bolted connections with high strength bolts shall use Direct Tension Indicator Devised in accordance with Paragraph 8(d)(4) of the "Specification for Structural Joints using ASTM A325 or A490 Bolts", approved by the Research Council on Structural Connections, November 13, 1985. High strength bolts shall be installed in properly aligned holes and tightened to at least the minimum tension specified in the table below. Alternately, calibrated wrench tightened may be used in lieu of Direct Tension Devices provided the requirements of Paragraph 8(d)(2) of the same Specification are met.

2. Fastener tension required for connections subject to direct tension:

	Minimum Tension in 1000's of Pounds (kips)	
Nominal Bolt Size (Inches)	**A325 Bolts**	**A490 Bolts**
1/2	12	15
5/8	19	24
3/4	28	35
7/8	39	49
1	51	64
1-1/8	56	80
1-1/4	71	102
1-3/8	85	121
1-1/2	103	148

Wrenches may be manual torque or power wrenches designed by the manufacturer for use with high strength bolts. If manual torque wrenches are used, their dials shall be calibrated on the job. If power wrenches are used, the manufacturer's recommendations shall be carefully followed and proper working conditions of the machine demonstrated before the work is started.

3. The Engineer may review the procedure for calibration of wrenches and installation of bolts and, in general, shall satisfy himself that all requirements of the Specifications for "Structural Joints using ASTM A325 or A490 Bolts" are met.

D. Cutting and Burning

1. The use of gas cutting torch in the field for correcting fabrication errors will not be permitted on any major member in the structural framing. Its use may be permitted on minor members if the member is not under stress, and then only after the written acceptance of the Engineer has been obtained. No cutting of structural steel members in the field will be allowed except by the written acceptance by the Engineer.

2. Holes shall be provided per AISC Specifications, or as indicated for securing other Work to structural steel framing and for the passage of other Work through steel framing members. Threaded nuts shall be welded to framing, and other specialty items, as shown, to receive other Work. No torch cut hoes will be permitted.

E. Grouting of Base Plates and Bearing Plates

1. All loose column base plates and billets shall be accurately set to the designated levels on steel wedges or angle screens in preparation for grouting under this Contract. Leveling plates grouted in place shall be installed under all structural steel columns.

2. Prior to the placement of non-shrink epoxy grout beneath base and bearing plates, the bottom surface of the plates shall be cleaned of all foreign materials, and concrete and masonry bearing surface shall also be cleaned of all foreign materials and roughened to improve bonding.

3. Anchor bolts shall be tightened after the supported members have been positioned and plumbed and the non-shrink grout has attained its specified strength.

4. Baseplates shall be grouted with non-shrink epoxy grout to assure full uniform bearing. Grouting shall be done prior to placing loads on the structure.

F. Welding

1. Welding, where required, shall be performed in accordance with the requirements of the AWS - Structural Welding Code. All shop and field welds in structural steel shall be visually inspected by an AWS qualified welding inspector. The CONTRACTOR shall furnish a letter of certification for each welded connection stating that these requirements have been met.

2. In assembly and during welding the component parts of built-up work shall be held in place by sufficient clamps, temporary bolts or other adequate means to keep parts in proper position. Where temporary bolts are used, to hold the parts together in steel plates or similar work the temporary bolts shall be removed and the holes shall be filled with welding material where practical. Otherwise, the nuts shall be tightened and the bolt threads outside the unit shall be burned and the bolt opened to prevent the nut from loosening.

G. Misfits at Bolted Connections:

1. Where misfits in erection bolting are encountered, the Engineer shall be immediately notified. The CONTRACTOR shall submit a method to remedy the misfit for review by the Engineer. The Engineer will determine whether the remedy is acceptable or if the member must be refabricated.

2. Incorrectly sized or misaligned holes in members shall not be enlarged by burning or by the use of drift pins. The CONTRACTOR shall notify the Engineer immediately and shall submit a proposed method of remedy for review by the Engineer.

3.04 FIELD ASSEMBLY

A. Structural frames shall be set accurately to the lines and elevations indicated. The various members shall be aligned and adjusted to form a part of a complete frame or structure before permanently fastened. Bearing surfaces and other surfaces which will be in permanent contact shall be cleaned before assembly. Necessary adjustments to compensate for discrepancies in elevations and alignments shall be performed.

B. Individual members of the structure shall be leveled and plumbed within specified AISC tolerances. The CONTRACTOR shall provide and install all temporary bracing required until structure is complete.

3.05 PRODUCT DELIVERY, STORAGE AND HANDLING

A. Structural members shall be loaded in such a manner that they may be transported and unloaded without being over-stressed, deformed or otherwise damaged.

B. Structural steel members and packaged materials shall be protected from corrosion and deterioration. Material shall be stored in a dry area and shall not be placed in direct contact with the ground. Materials shall not be placed on the structure in a manner that might cause distortion or damage to the members or the supporting structures. Repair or replace damaged materials or structures as directed.

3.06 PAINTING

A. General Requirements

1. Steel work which will be encased in concrete shall not be painted, and all other steel work that is not to be galvanized shall be given one prime coat and one coat of shop paint before shipment to the field as specified under Section 09850 entitled

"Painting". Steel work to be encased in concrete shall have all loose rust and scale removed by wire brushing or other methods as accepted by the Engineer prior to encasement.

2. After inspection and acceptance and before leaving the shop, all steel work specified to be painted shall be sand blasted or wheelabrated by the fabricator, of loose mill scale, loose rust, weld slag or flux deposit, dirt and other foreign matter to satisfy the following requirements of the Steel Structures Painting Council: Specification (SSPC), SP-6 NACE 3 for all steel except immersion service; for all steel in immersion service, SSPC-SP-10 NACE2.

3. Cleaned metal shall be primed or pretreated within six hours after cleaning to prevent new rust forming.

B. Contact Surfaces: Contact surfaces shall be cleaned and primed in accordance with Item A of this Section but shall not be painted.

C. Finished Surfaces: Machine finished surfaces shall be protected against corrosion by rust-inhibiting coating that can be easily removed prior to erection or which has characteristics that make removal unnecessary prior to erection.

D. Surfaces Adjacent to Field Welds: Surfaces within 2 inches of an field weld location shall be free of materials that would prevent proper welding or produce objectionable fumes while welding is being done.

E. Painting Schedule

1. After erection of the structural steel and miscellaneous steel is complete, the CONTRACTOR shall touch up all abrasions in the shop coat and shall spot paint all field rivets, field bolts and field welds with the paint and procedure specified in Section 09850 entitled "Painting".

2. All painting performed at the fabricator's shop shall be subject to inspection by OWNER or his representative. All parts of the Work shall be made accessible to OWNER or his representative. The CONTRACTOR shall correct such work as found defective under this Section of the Specification.

3. Field cuts on galvanized steel shall be wire brushed and coated with Carbomastic 15, Carboline Co., or equal, to a thickness of 4 to 6 mils.

- END OF SECTION -

SECTION 05500 - METAL FABRICATIONS

PART 1 - GENERAL

1.01 THE REQUIREMENT

A. The Contractor shall furnish, fabricate, and install miscellaneous metalwork and appurtenances, complete, all in accordance with the requirements of the Contract Documents.

1.02 RELATED WORK SPECIFIED ELSEWHERE

A. Metal Fastening

B. Painting

1.03 REFERENCE SPECIFICATIONS, CODES, AND STANDARDS

A. Without limiting the generality of other requirements of these Specifications, all work specified herein shall conform to or exceed the requirements of the Florida Building Code and the applicable requirements of the following documents to the extent that the provisions of such documents are not in conflict with the requirements of this Section:

1. American Society for Testing and Materials (ASTM), specifications as referred to herein.

2. American Welding Society (AWS) "Structural Welding Code-Steel" (AWS D1.1) which includes qualification procedures for welders.

3. American Institute of Steel Construction (AISC) "Specifications for the Design, Fabrication, and Erection of Structural Steel for Buildings" and "Commentary on the AISC Specification."

4. American Iron and Steel Institute (AISI) "Specifications for the Design of Cold-Formed Steel Structural Members" and "Commentary on the AISI Specification."

5. Occupational Safety and Health Administration (OSHA) Regulations.

6. Aluminum Association "Specifications for Aluminum Structures" and "Engineering Data for Aluminum Structures."

7. National Association of Architectural Metal Manufacturers "Metal Stairs Manual."

B. References herein to "Building Code" shall mean the Florida Building Code.

1.04 SUBMITTALS

A. Shop drawings of all miscellaneous metalwork shall be submitted to the Engineer for review in accordance with the Section entitled “Submittals”.

B. Safe working load capacity in tension and shear for each size and type of concrete anchor used shall be submitted to the Engineer for review.

PART 2 - PRODUCTS

2.01 MATERIALS

A. Materials are specified in the Section entitled “Metal Materials”.

B. Unless otherwise shown, miscellaneous "steel" metalwork of fabricated steel, which will be used in a corrosive environment and/or will be submerged in water/wastewater shall be coated in accordance with the Section entitled “Painting” and shall not be galvanized prior to coating. Unless otherwise shown, all other miscellaneous steel metalwork shall be hot-dip galvanized after fabrication as specified herein.

C. Unless otherwise shown, aluminum metalwork shall be of Alloy 6061-T6. Aluminum in contact with concrete, masonry, wood, porous materials, or dissimilar metals shall have contact surfaces coated in accordance with the Section entitled “Painting”. Aluminum design shall be in accordance with the Aluminum Association standards. Aluminum shall be fastened with Type 316 stainless steel bolts.

D. Unless otherwise shown, iron castings shall conform to the requirements of ASTM A48 "Specifications for Gray Iron Castings," Class 30B or better.

E. Fasteners shall meet all design requirements for intended application. Fasteners not manufactured in the United States shall be tested and certification provided with respect to specified and required quality and strength standards. Certifications of origin shall be submitted for all U.S. fasteners supplied on the project.

2.02 BOLTS AND CONCRETE ANCHORS

A. Bolts, concrete anchors and other fasteners are specified in the Section entitled "Metal Fastening".

2.03 STEEL PIPE BUMPER GUARDS (BOLLARDS)

A. Steel pipe bumper guards shall be as detailed on the Drawings, including pipe sleeves, concrete fill, crushed fill and grouting to secure parts. Pipe for guards shall be galvanized steel, Schedule 40 pipe that conforms to ASTM A53. Painting shall be in accordance with the Section entitled Painting.

B. Steel pipe bumper guards shall be concrete filled and crowned, as detailed on the Drawings.

PART 3 - EXECUTION

3.01 EXAMINATION

A. Verify that field conditions are acceptable and are ready to receive work.

B. Beginning of installation means erector accepts existing conditions.

3.02 PREPARATION

A. Clean and strip primed steel items to bare metals where site welding is required.

B. Supply items required to be cast into concrete with setting templates, to appropriate sections.

3.03 INSTALLATION

A. Install items plumb and level, accurately fitted, free from distortion or defects.

B. Allow for erection loads, and for sufficient temporary bracing to maintain true alignment until completion of erection and installation of permanent attachments.

C. Field weld components indicated on Drawings.

D. Obtain Engineer approval prior to site cutting or making adjustments not scheduled.

E. Fabrication and Erection: Except as otherwise shown, the fabrication and erection of structural steel shall conform to the requirements of the American Institute of Steel Construction "Manual of Steel Construction."

3.04 WELDING

A. All welding shall be by the metal-arc method or gas-shielded arc method as described in the American Welding Society's "Welding Handbook" as supplemented by other pertinent standards of the AWS. Qualification of welders shall be in accordance with the AWS Standards governing same.

B. In assembly and during welding, the component parts shall be adequately clamped, supported and restrained to minimize distortion and for control of dimensions. Weld reinforcement shall be as specified by the AWS Code. Upon completion of welding, all weld splatter, flux, slag, and burrs left by attachments shall be removed. Welds shall be repaired to produce a workmanlike appearance, with uniform weld contours and dimensions. All sharp comers of material which is to be painted shall be ground to a minimum of 1/32-inch on the flat.

- END OF SECTION –

SECTION 05531 – GRATINGS, FLOOR PLATES, AND ACCESS HATCHES

PART 1 -- GENERAL

1.01 THE REQUIREMENT

A. The Contractor shall furnish all materials, labor, and equipment required to provide all gratings, floor plates, and hatches in accordance with the Contract Documents.

1.02 RELATED WORK SPECIFIED ELSEWHERE

A. Metal Fabrications

1.03 REFERENCE SPECIFICATIONS, CODES AND STANDARDS

A. Without limiting the generality of the other requirements of the specifications, all work herein shall conform to the applicable requirements of the following documents. All referenced specifications, codes, and standards refer to the most current issue available at the time of Bid.

1. Florida Building Code
2. Aluminum Association Specifications for Aluminum Structures
3. Occupational Safety and Health Administration (OSHA) Regulations

1.04 SUBMITTALS

A. Submit the following in accordance with the Section entitled “Submittals”.

1. Complete fabrication and erection Drawings of all gratings, floor plates, access hatches, and access doors specified herein.
2. Other submittals as required in accordance with the Section entitled “Metal Fabrications”.

PART 2 -- PRODUCTS

2.01 METAL MATERIALS

A. Metal materials used for gratings, floor plates, and hatches shall conform to the Section entitled “Metal Materials” unless noted otherwise.

2.02 METAL FASTENING

A. All welds and fasteners used for gratings, floor plates, and hatches shall conform to the Section entitled “Metal Fastening” unless noted otherwise.

2.03 GRATING

A. General: Grating, including support frames, fastenings, and all necessary appurtenances for a complete installation shall be furnished as indicated on the Drawings.

1. All exposed bearing ends of grating shall be enclosed in a perimeter band of the same dimensions and materials as the main bars, including ends at all cutouts.

2. Gratings shall be designed for a loading of 100 psf unless a depth is required by the Drawings. Minimum grating depth shall be 1-1/2 inches. Deflection shall not exceed L/240 or 1/4-inch.

3. All grating shall be furnished with holddowns.

B. Aluminum Grating

1. Aluminum grating shall be of I-Bar type with cross bars at 2 inches on center and shall consist of extruded bearing bars positioned and locked by crossbars. All supports, cross members, etc. shall be aluminum. Plank clips for grating holddowns or other required attachments shall be aluminum or stainless steel. Bolts shall be stainless steel.

2. Aluminum grating shall be aluminum swage locked “I-Bar” Type IF, as manufactured by IKG Borden or equal.

3. Aluminum grating shall be provided with a mill finish.

4. Aluminum grating shall be fabricated into easily removable sections and shall be fastened at each corner and as required with fasteners provided by the grating manufacturer. No section of grating shall weigh in excess of 50 lbs. nor be wider than 3 feet. No fasteners shall be permitted to project above the walking surface.

C. Aluminum Plank Grating

1. Aluminum plank grating shall be unpunched, consisting of 6-inch wide extruded sections, heavy duty type with 6 ribs and plain sides, fabricated in standard sections as manufactured by Ohio Gratings, McNichols, IKG Borden, or approved equal. All planks shall be provided with extruded grating frame cast in concrete or support angles as indicated on the drawings.

2. Grating panels shall be made from 6-inch wide extruded sections and banded to form standard panel widths.

3. Plank clips for grating holddowns or other required attachments shall be aluminum or stainless steel.

4. Sections shall be edge banded in sections and provided with stainless steel flush mounted lift handles with necessary plank reinforcing and holdown anchors.

5. Hinged sections shall be shop fabricated ready for field installation. Panels shall be edge banded with a continuous hinge, flush mounted lifting handles (1 section

minimum), stainless steel bolts and hardware. Grating frame shall be provided with removable temporary braces to maintain the required opening width during casting. Provide necessary grating reinforcing for lift handles, hinge connections, holdown anchors, etc.

6. Plank grating shall be provided with a mill finish.

D. Steel Grating

1. Steel grating shall be custom welded heavy duty steel grating per ANSI/NAMM MBG 532-000. Minimum bearing bar size shall be 2¼-inch x ¼-inch. All supports, cross members, etc. shall be galvanized steel. Plank clips for grating hold downs shall be stainless steel. Bolts shall be galvanized steel.

2. All openings shall be banded.

3. Steel grating shall be galvanized in accordance to the Section entitled “Galvanizing”.

4. Main bearing bars shall conform to ASTM A36. Cross bars shall be flush with the top of the grating.

5. Grating span shall be 36 inches maximum and shall satisfy AASHTO loading for H-20 truck unless noted otherwise on the drawings.

6. Grating shall be manufactured by IKG Borden Industries, Leeds, AL.

2.04 CHECKERED PLATES

A. Checkered plates shall be aluminum Alloy 6061-T6, or galvanized steel as indicated on the Drawings. Aluminum checkered plates shall be provided in mil finish, except when otherwise indicated on the Drawings, and designed for a live load of 150 pounds per square foot of the gross projected area. The allowable deflection under the above loadings shall be L/240 but not more than ¼-inch.

B. Checkered plates shall be standard pattern non-slip of the thickness and sizes on the Drawings. Minimum thickness shall be 3/8 inch. Stiffener angles shall be provided as required to meet the load requirements specified above. All checkered plate sections shall be cut that no one section shall weigh more than 100 pounds.

C. Flush type lifting handles and hinges and neoprene seals for air tight construction shall be provided where shown on the Drawings.

D. At locations noted, neoprene gaskets shall be provided between floor plates and frames. Plates shall be screwed into frames when noted on the Drawings.

E. Hinges, where indicated on the Drawings, shall be heavy-duty, cadmium plated bronze with stainless steel pins and fasteners.

F. Removable Sections: Plates shall be fabricated in removable sections with weight not exceeding 60 pounds each with flush mounted handles and removable holdown stainless steel bolts.

2.05 ACCESS HATCHES

A. General

1. Door opening sizes, number and direction of swing of door leaves, and locations shall be as shown on the Drawings. The Drawings show the clear opening requirements. Door leaves shall be 1/4 inch, minimum, diamond pattern plate with an approved raised pattern, non-skid surface. Plate shall be stiffened as required to maintain allowable stress and deflection requirements. Stiffeners shall consist of angles or bars welded to the bottom of plate

2. All doors shall be aluminum (mill finish) unless otherwise noted. All doors in locations subject to direct vehicular traffic shall be galvanized steel designed for H-20 live loads.

3. Openings larger than 42 inches in either direction shall have double leaf doors.

4. Doors shall be designed for flush mounting and for easy opening from both inside and outside.

5. All doors shall be provided with an automatic hold-open arm with release handle.

6. Double leaf doors shall be provided with Type 316 stainless steel safety chains to go across the open sides of the door, when in the open position. Brackets shall be provided on the underside of the doors to hold the safety bars when not in use.

7. All hardware, including but not limited to, all parts of the latch and lifting mechanism assemblies, hold open arms and guides, brackets, hinges, springs, pins, and fasteners shall be Type 316 stainless steel.

8. All doors shall be watertight with a continuous gasket. All single door applications shall include a continuous EPDM odor reduction gasket.

9. Cylinder locks with keyway protected by a cover plug shall be provided with all hatches.

10. Door leafs shall be 1/4-inch aluminum diamond plate, minimum, stiffened and designed for H-20 live loads at areas that could receive traffic wheel loads.

11. Door frames shall be trough-type or angle-type as indicated on the Drawings and equipped with a built-in neoprene cushion. On trough-type frames, the drainpipe shall be provided by the CONTRACTOR and shall extend to the nearest point of discharge acceptable to the ENGINEER.

11. Exterior doors shall be Type "J-AL" or "JD-AL", by Bilco Company, Type ”W1S” or “W2S” by Halliday Products Inc., Type "TPS" or "TPD", by U.S.F. Fabrication Inc., Type "THG" or "THG-D", by Thompson Fabricating LLC., or equal.

12. Interior doors shall be Type "K" or "KD", by Bilco Company, Type ”S1S” or “S2S” by Halliday Products Inc., Type "APS300" or "APD300", by U.S.F. Fabrication Inc., Type "TH" or "TH-D", by Thompson Fabricating LLC., or equal.

13. Doors rated for H-20 traffic loading shall be “JAL-HD” or “JDAL-HD” by the Bilco Company, Type “H1W” or “H2W” by Halliday Products, Inc.

14. Hatches shall be guaranteed against defects for a period of five years.

B. Roof Access Hatches

1. Roof access hatches shall be designed for a 50 psf live load minimum, unless noted otherwise.

2. Roof access hatches for service stairs shall be Bilco Type L Roof Scuttles.

3. Roof access hatches for ladder access shall be Bilco Type S or SS Roof Scuttles.

2.06 FIXED LADDERS

A. Where the Contract Documents indicate fixed ladders are required under access hatches, they shall be provided with “LadderUp, Model LU-4” by Bilco Company, “L1E Ladder Extension” by Halliday Products Inc., or “Ladder Climb-out Device” by Thompson Fabricating.

B. The safety posts shall be manufactured of the same material as the access door with telescoping tubular sections that lock automatically when fully extended.

C. Upward and downward movement shall be controlled by a stainless steel balancing mechanism.

D. Safety posts shall be assembled in strict accordance with manufacturer's recommendations.

2.07 FALL THROUGH PREVENTION SYSTEM

A. All access hatches and access doors covering openings measuring 12 inches or more in its least dimension through which persons may fall shall be equipped with a fall through prevention system, except where noted on the Contract Drawings. Access hatches and access doors shall be provided with a permanent installed fall through prevention grate system that provides continuous safety assurance in both its closed and open positions. Fall through prevention grate system shall be hinged opposite access doors. The grate system shall be made with 6061-T6 aluminum or FRP and be designed for a 300 psf minimum liveload, unless noted otherwise.

PART 3 -- EXECUTION

3.01 FABRICATION

A. All measurements and dimensions shall be based on field conditions and shall be verified by the Contractor prior to fabrication. Such verification shall include coordination with adjoining work. Fabrication shall begin only after such field measurements.

B. All fabricated work shall be shop fitted together as much as practicable and delivered to the field, complete and ready for erection, unless sections have to be removable. All miscellaneous items such as stiffeners, fillets, connections, brackets, and other details necessary for a complete installation shall be provided.

C. All work shall be fabricated and installed in a manner that will provide for expansion and contraction, prevent shearing of bolts, screws, and other fastenings, ensure rigidity, and provide a close fit of sections.

D. Finished members shall conform to the lines, angles, and curves shown on the Drawings and shall be free from distortions of any kind.

E. All shearings shall be neat and accurate, with parts exposed to view neatly finished. Flame cutting is allowed only when performed utilizing a machine.

F. All shop connections shall be welded unless otherwise indicated on the Drawings or specified herein. Bolts and welds shall conform to the Section entitled “Metal Fastening”. All fastenings shall be concealed where practicable.

3.02 INSTALLATION

A. Assembly and installation of fabricated system components shall be performed in strict accordance with manufacturer's recommendations.

B. All gratings, access hatches, and access doors shall be erected square, plumb and true, accurately fitted, adequately anchored in place, and set at proper elevations and positions.

- END OF SECTION –

SECTION 05540 - CASTINGS

PART 1 -- GENERAL

1.01 REQUIREMENT

A. Furnish all materials, labor, and equipment required to provide all castings in accordance with the requirements of the Contract Documents.

1.02 REFERENCE SPECIFICATIONS, CODES AND STANDARDS

A. Without limiting the generality of the other requirements of the specifications, all work herein shall conform to the applicable requirements of the following documents. All referenced specifications, codes, and standards refer to the most current issue available at the time of Bid.

1. Florida Building Code (latest edition)

1.03 SUBMITTALS

A. Submit the following in accordance with Section 01300, Submittals.

1. Complete fabrication and erection drawings of all castings specified herein.

2. Other submittals as required in accordance with Section 05010, Metal Materials, and Section 05050, Metal Fastening.

PART 2 -- PRODUCTS

2.01 METAL MATERIALS

A. Metal materials used for castings shall conform to Section 05010, Metal Materials, unless noted otherwise.

2.02 METAL FASTENING

A. All welds and fasteners used for castings shall conform to Section 05050, Metal Fastening, unless noted otherwise.

2.03 IRON CASTINGS

A. General - Iron Castings shall include, but not be limited to frames, covers, and grates for trench drains, catch basins, and inlets/.

1. Castings shall be of gray iron of uniform quality, free from defects, smooth and well cleaned by shotblasting.

2. Catalog numbers on the Drawings are provided only to show required types and configuration. All covers shall be cast with raised letters as designated on the Drawings.

3. Castings shall be as manufactured by Dewey Brothers, or Neenah Foundry Company.

B. Covers and Grates

1. Covers and grates shall be provided with matching frames. Cover shall fit flush with the surrounding finished surface. The cover shall not rock or rattle when loading is applied.

2. Round covers and frames shall have machined bearing surfaces.

3. Design loadings:

a. Where located within a structure, a minimum design loading of 300 psf shall be used, unless noted otherwise.

b. At all locations not within a structure, the design loading shall be a standard AASHTO H-20 truck loading, unless otherwise noted.

C. Watertight gasketing, bolting, locking devices, patterns, lettering, pickholes, vents, or self-sealing features shall be as detailed on the Drawings.

PART 3 -- EXECUTION

3.01 FABRICATION

A. All measurements and dimensions shall be based on field conditions and shall be verified by the Contractor prior to fabrication. Such verification shall include coordination with adjoining work.

B. All fabricated work shall be shop fitted together as much as practicable, and delivered to the field, complete and ready for erection. All miscellaneous items such as stiffeners, fillets, connections, brackets, and other details necessary for a complete installation shall be provided.

C. Finished members shall conform to the lines, angles, and curves shown on the Drawings and shall be free from distortions of any kind.

3.02 INSTALLATION

A. Assembly and installation of fabricated system components shall be performed in strict accordance with manufacturer's recommendations.

B. All castings shall be erected square, plumb and true, accurately fitted, adequately anchored in place, and set at proper elevations and positions.

- END OF SECTION -

SECTION 07270 - FIRESTOPPING

PART 1 -- GENERAL

1.01 THE REQUIREMENT

A. Furnish labor, materials and equipment required to complete the installation of troweled or gun applied firestopping as indicated on the Drawings and specified herein.

1.02 REFERENCE SPECIFICATIONS, CODES AND STANDARDS

A. Without limiting the generality of these specifications Work shall conform to the applicable requirements of the following documents:

1. ASTM E84 — Test Method for Surface Burning Characteristics of Building Materials.
2. ASTM E119 — Method for Fire Tests of Building Construction and Materials.
3. ASTM E814 — Test Method of Fire Tests of Through- Penetration Firestops.
4. ASTM E 1966 — Standard Test Method for Five Resistive Joint Systems.
5. UL-01 — Building Materials Directory.
6. Ul-1479 — Fire Test of Through-Penetration Firestops
7. UL-2079 — Tests for Fire Resistance of Building Joint Systems.

1.03 SUBMITTALS

A. In accordance with the procedures and requirements set forth in Section 01300 - Submittals, submit the following:

1. Product data on characteristics, performance, and limitation criteria.
2. Manufacturer's installation instructions.
3. Certification that products meet or exceed requirements.
4. Detail Drawings.

1.04 QUALITY ASSURANCE

A. A manufacturer’s direct representative (not distributor or agent) to be on-site during initial installation of firestop systems to train appropriate contractor personnel in proper selection and installation procedures. This will be done per manufacturer’s written recommendations published in their literature and drawing details.

B. Firestop System installation must meet requirements of ASTM E-814, UL 1479 or UL 2079 tested assemblies that provide a fire rating equal to that of construction being penetrated.

C. Proposed firestop materials and methods shall conform to applicable governing codes having local jurisdiction.

D. Firestop Systems do not reestablish the structural integrity of load bearing partitions/assemblies, or support live loads and traffic. Installer shall consult the structural engineer prior to penetrating any load bearing assembly.

E. Engage an installer with a minimum of 5 years experience and who is certified, licensed, or otherwise qualified by firestopping manufacturer as having been provided the necessary training to install manufacturer's products per specified requirements.

1.05 DELIVERY, STORAGE, AND HANDLING

A. Deliver materials undamaged in manufacturer's clearly labeled, unopened containers, identified with brand, type, and UL label where applicable.

B. Coordinate delivery of materials with scheduled installation date to allow minimum storage time at job-site.

C. Store materials under cover and protect from weather and damage in compliance with manufacturer's requirements, including temperature restrictions.

D. Comply with recommended procedures, precautions or remedies described in material safety data sheets as applicable.

E. Do not use damaged or expired materials.

1.06 PROJECT CONDITIONS

A. Do not use materials that contain flammable solvents.

B. Schedule installation of firestopping after completion of penetrating item installation but prior to covering or concealing of openings.

C. Verify existing conditions and substrates before starting work. Correct unsatisfactory conditions before proceeding.

D. Weather conditions: Do not proceed with installation of firestop materials when temperatures exceed the manufacturer's recommended limitations for installation printed on product label and product data sheet.

E. During installation, provide masking and drop cloths to prevent firestopping materials from contaminating any adjacent surfaces.

PART 2 -- PRODUCTS

2.01 ACCEPTABLE MANUFACTURERS

A. Subject to compliance with the Specifications provide products manufactured by one of the following:

1. Hilti, Inc.

2. 3M Corp.

3. Specified Technologies, Inc.

2.02 MATERIALS

A. Provide firestopping materials of commercially manufactured products complying with the following minimum requirements and as listed in Underwriters Laboratories, Inc. -Building Materials Directory.

1. ASTM E84 or UL 723 with a flame spread of 25 or less; smoke development rating of 50 or less; fuel contribution of 50 or less.

2. Non-toxic and non-corrosive during each stage of application and during fire conditions.

3. Penetrations: ASTM E814 or UL 1479 with 2 hour ratings or as shown on Drawings.

4. Joints: UL 2079 2 hour rating or as shown on Drawings.

5. Non-combustible when tested in accordance with ASTM E136.

6. Materials shall impede the passage of smoke and gases.

B. Backing Material: Unfaced non-combustible mineral wool, or manufacturer pre-fabricated backer rod, as per Underwriters Laboratories, Inc. Building Materials Data.

C. Accessories: Collars, fasteners, straps, and other accessories shall be manufacturer's standard products approved for UL through penetrations.

PART 3 -- EXECUTION

3.01 SURFACE PREPARATION

A. Perform preparation and cleaning procedures in compliance with manufacturer's instructions.

3.02 INSTALLATION

A. Install firestopping as shown on the Drawings, as specified, and as required by UL-system. Firestop the following:

1. Duct, conduit, and pipe penetrations through below-grade floors and time-rated partitions.

2. Penetrations of vertical shafts.

3. Gaps between fire rated partitions and structure above, or exterior walls.

B. Install firestopping in strict accordance with UL through-penetrations systems requirements.

C. Cure finished work as recommended by the manufacturer to avoid shrinkage cracks.

3.03 MIXING

A. Mix and prepare materials in compliance with the manufacturer's directions.

B. Store materials in tightly covered containers. Maintain containers used in storage, mixing, and application of firestopping in a clean condition, free of foreign materials and residue.

C. Mix materials to produce a uniform density and as required for application of the materials.

3.04 INSPECTION

A. Examine the substrates to receive firestopping and the conditions under which the work is to be performed and notify the Engineer in writing of any conditions detrimental to the proper and timely completion of the work and performance of the firestopping. Do not proceed with the work until unsatisfactory conditions have been corrected in a manner acceptable to the material manufacturer and Engineer.

B. Commencement of firestopping work shall be interpreted as proof of acceptability of the substrates, by the applicator and the applicator's acceptance of responsibility for any failure of bond between installation of firestopping and substrate in any particular area.

C. Do not apply materials over incompatible steel primers, dirt, rust, grease, moisture or other conditions unacceptable according to the manufacturer's instructions.

3.05 FIELD QUALITY CONTROL

A. Examine sealed penetration areas to ensure proper installation before concealing or enclosing areas.

B. Keep areas of work accessible until inspection by applicable code authorities.

C. Inspection of through-penetration firestopping shall be performed in accordance with ASTM E 2174, “Standard Practice for On-Site Inspection of Installed Fire Stops” or other recognized standard.

D. Perform under this section patching and repairing of firestopping caused by cutting or penetrating of existing firestop systems already installed by other trades.

3.06 ADJUSTMENT AND CLEANING

A. Upon completion of work, clean spattered surfaces. Remove spattered materials by methods of washing and scraping, using care not to scratch or otherwise damage finish surfaces. Clean with manufactures recommended solution.

B. Protect work of other trades, whether to be coated or not, against damage by the work. Correct damage by cleaning, repairing or replacing and recoating. Leave all work in undamaged condition.

C. Take precautions to ensure that workmen and work areas are adequately protected from fire hazards and health hazards resulting from handling, mixing and application of firestopping.

- END OF SECTION -

SECTION 07510 – BUILT-UP BITUMINOUS ROOFING

PART 1 – GENERAL

1.01 THE REQUIREMENT

A. The Contractor shall furnish and install 20-year guaranteed built-up roofing systems and all appurtenant work, complete, and shall coordinate all the work hereunder with the related work specified in other Sections, all in accordance with the requirements of the Contract Documents. The new built-up roofing shall be installed on the roofs of the pump room and the chlorination area as indicated in the sketches attached to this section of the specifications.

B. The Contractor shall retain the services of a licensed roofing contractor who shall inspect the work, prepare and submit the specified submittals to the Engineer for review. Upon acceptance by the Engineer, the roofing contractor shall apply for and secure a roofing permit from the City of Hallandale's Building Department. The Contractor shall prepare and submit all documentation as required by the Building Department for a roofing permit. During the roofing contractor's inspections, changes may be required to the shown roofing layouts, accessories and drainage; such changes shall be documented in the submittals and performed at no additional costs to the OWNER.

1.02 RELATED WORK SPECIFIED ELSEWHERE

A. Section 07600 - Flashing and Roofing Accessories

1.03 REFERENCE SPECIFICATIONS, CODES, AND STANDARDS

A. Federal Specifications

1.	SS-A-701B	Asphalt, Petroleum (Primer, Roofing, and Weatherproofing).
2.	SS-C-153C	Cement, Bituminous, Plastic.

B. Commercial Standards

1.	ASTM D 41	Specification for Asphalt Primer Used in Roofing, Dampproofing, and Waterproofing.
2.	ASTM D 226	Specification for Asphalt-Saturated Organic Felt Used in Roofing and Waterproofing.
3.	ASTM D 249	Specification for Asphalt Roll Roofing (Organic Felt) Surfaced with Mineral Granules.
4.	ASTM D 250	Specification for Asphalt-Saturated Asbestos Felt Used in Roofing and Waterproofing.
5.	ASTM D 312	Specification for Asphalt Used in Roofing.

6. ASTM D 1668 — Specification for Glass Fabrics (Woven and Treated) for Roofing and Waterproofing.

7. ASTM D 1863 — Specification for Mineral Aggregate Used on Built-up Roofs.

8. ASTM D 1866 — Test Method for Translucency of Mineral Aggregate Used on Built-Up Roofs.

9. ASTM D 2178 — Specification for Asphalt Glass Felt Used in Roofing and Waterproofing.

10. ASTM D 2626 — Specification for Asphalt-Saturated and Coated Organic Felt Base Sheet Used in Roofing.

11. FM — Factory Mutual.

12. U/L — Underwriters Laboratories, Inc.

13. FS HH I 1972/GEN — Insulation Board, Thermal, Faced, Polyurethane or Polyisocyanurat

C. Trade Standards

1. NRCA — National Roofing Contractors Association.

D. Manufacturer's Standards

1. In addition to the standards listed above, the roofing products and their installation shall be in accordance with the manufacturer's published recommendations and specifications.

1.04 SUBMITTALS

A. Submittals shall be in accordance with the requirements of Section 01300 entitled "Submittals".

B. Plan layouts of the proposed roofing (minimum scale shall be 1/8 inch = 1 foot) shall be submitted. The layout shall identify the complete scope of work, details of parapet flashings, equipment support area details, pipe and other roofing penetration details as required for a complete installation. The Contractor shall coordinate all dimensions associated with roof-mounted equipment and identify them on the roofing layout.

C. The manufacturer's specifications, literature, and published installation instructions for each major roofing element, product or system shall be submitted to the Engineer. Shop drawings showing sizes, shapes, thickness, types of materials, finishes, fabrication details, anchors, connections, expansion joints and installation instructions shall be provided at large scale on full size drawings. Provide samples of each product and color samples of cap sheet.

D. Florida Product Approval for use in the High Velocity Hurricane Zone.

E. Roofing shall be applied by a roofing contractor, approved by the Contractor, through the roofing manufacturer, in writing, with a copy of such approval submitted to the Engineer.

F. A certification from the manufacturer that the proposed roofing flashing and accessories are covered by the manufacturer's 20 year system warranty.

G. After installation of the roofing, the Contractor shall furnish to the Engineer a signed affidavit that the roof complies with the requirements of these Specifications and the manufacturer's recommendations for the class and type of roof specified.

H. The Contractor shall furnish the Engineer with duplicate signed copies of the Roof Guarantee as specified in Section 01300 entitled "Submittals". A sample copy of the guarantee, on the form that will be used for the actual guarantee, shall be submitted with the shop drawings, for review.

1.05 ENVIRONMENTAL REQUIREMENTS

A. Do not apply roofing membrane during inclement weather.

B. Do not apply roofing membrane to damp or frozen deck surfaces.

C. Do not expose materials vulnerable to water or sun damage in quantities greater than can be weatherproofed during the same day.

D. At lower air temperatures, to assure sound adhesion, care must be exercised to provide asphalt, at the point of application, at the asphalt's equiviscous temperature (EVT) plus 20 degrees Fahrenheit or at 400 degrees Fahrenheit, which ever is higher.

1.06 PRODUCT DELIVERY, STORAGE, AND HANDLING

A. Manufactured materials shall be delivered in original, unbroken packages, containers, or bundles bearing the name of the manufacturer.

B. All materials shall be carefully stored in a manner that will prevent damage of the products and in an area that is protected from the elements.

1.07 QUALITY ASSURANCE

A. The Contractor shall pay the cost of all test cutting, testing, and repairs. If deviations from written and accepted manufacturer's specifications are found, the Contractor, at its own expense, shall make all corrections necessary to meet the requirements of the Contract Documents, the roofing manufacturer recommendations, and the requirements of the Engineer.

B. The Contractor shall provide a minimum of three site visit inspections by an official manufacturer's representative on all roofing and flashing. Inspections are to be made at the beginning of the job and a minimum of once more while the roofing and/or flashing work is in progress to ensure workmanship is in accordance with the manufacturer's specifications.

C. The Contractor is cautioned that the products specified in these specifications may require the purchase of a minimum quantity from the manufacturer. The minimum purchase

quantities may exceed the quantities defined in the Contract Documents. The Owner or the Engineer will not consider requests for substitutions of specified products unless equal in physical and performance characteristics and accompanied with appropriate credits. The responsibility of providing quantities required shall remain with the Contractor.

1.08 TESTING

A. The Contractor shall retain the services of a testing company to perform testing of the built-up bitumen roofing installed under this Contract.

B. The testing program performed by the testing company will include an infrared imaging test (performed at night) of the roofing membrane and insulation to detect leaks in the system. The test will be conducted in accordance with ASTM C 1153 by a Level III inspector certified by the American Society of Nondestructive Testing, Inc.

C. The roofing system will not be accepted by the Owner should the testing company detect any leaks in the system. If moisture is detected in the insulation of the substrate, repairs shall be performed by the Contractor at no additional costs to the Owner. Repairs shall be acceptable to the roofing manufacturer to satisfy the specified guarantee requirements. After repairs are performed, the roofing shall be re-tested by the testing company. The Contractor shall be responsible for the re-testing costs.

D. If the re-tests detect further moisture in the system, then the entire roofing system shall be removed and replaced by the Contractor at its expense.

1.09 GUARANTEE

A. A manufacturer's "No-Dollar-Limit" Guarantee for a period of 20 years is required for all new roofing applications under this Contract. The Contractor shall engage the services of a roofing contractor approved by the manufacturer to install the roofing system subject to the guarantee requirements specified herein. The roofing contractor shall provide the manufacturer with all necessary documentation to ensure the provision of the guarantee. The sources of bitumen shall be acceptable to the roofing manufacturer.

B. All roofing accessories, including flashing, fasteners, roof vents, curb details and other miscellaneous metals and accessories required for the installation shall be supplied by the roofing manufacturer or from other sources acceptable to the manufacturer selected for the installation so that the system guarantee will include all edges, penetrations and other details of the installation.

C. The system guarantee shall promise that for the period of the guarantee, the manufacturer will pay for repairs to stop leaks resulting from natural deterioration of the membranes or poor workmanship in applying the roofing materials or failure of the system to perform as roofing and providing a waterproof, watertight system.

1.10 SERVICES OF MANUFACTURER'S REPRESENTATIVE

A. Inspection and testing will be performed by a Professional Engineering firm or manufacturer’s representative approved by the Engineer.

B. Correct defects and irregularities reported.

1.11 MANUFACTURERS

A. The built-up roofing system shall be as manufactured by Johns Manville, The Garland Company, Tremco Roofing or equal.

PART 2 – PRODUCTS

2.01 ROOFING SYSTEM

A. The roofing system shall be a five ply mineral surfaced fiberglass built up roof over the specified tapered rigid insulation. The system shall be 5GIC by Johns Manville or equal.

2.02 ROOF INSULATION

A. The roof insulation shall consist of rigid roof insulation boards with a minimum total thickness as identified on the drawings, but no less than 3 inches. The boards shall be comprised of a closed cell Polyisocyanurate foam core bonded to fiberglass reinforced facers. The minimum R-value of insulation, when tested in accordance with ASTM C1289, shall be 5.7 (hr-ft2-F)/BTU per inch of thickness. ENRGY 3 by Johns Manville meets the requirements of these Specifications.

B. At locations where tapered roofing is indicated on the Drawings, custom factory-fabricated tapered panels shall be provided over the specified roof insulation. Tapered insulation thickness shall be designed to achieve a minimum roof slope of 1/4 inch per foot. The tapered insulation shall be tapered ENRGY 3 by Johns Manville, or equal, over one layer of rigid insulation, minimum ½" thick.

2.03 ASPHALT

A. Asphalt shall meet the requirements of ASTM D 312, Type III. The sources shall be approved by the roofing manufacturer for the purpose of the guarantee.

2.04 ROOF FELTS

A. Roof felts shall be approved by the manufacturer for a 20-year no dollar limit roofing guarantee. Roof felts shall comply with ASTM D 2178, Type VI. Roof felts shall be type G-1 coated ply sheets as classified by Underwriters Laboratories. Glas Ply Premier by Johns Manville meets the requirements of this Section.

2.05 CAP SHEET

A. The cap sheet shall be a mineral surfaced, asphalt coated, fiberglass cap sheet for use in hot applied built-up roofing systems. The cap sheet shall be classified as a Type G-2 Coated Cap sheet by Underwriter's Laboratories, and shall meet the requirements of ASTM D 3909. GlasKap by Johns Manville meets the requirements of this section.

2.06 ROOFING ACCESSORIES

A. Roofing Accessories are specified in Section 07600 entitled "Flashing and Roofing Accessories".

PART 3 – EXECUTION

3.01 SHIPPING, HANDLING AND STORAGE

A. Deliver roofing materials to the job site in manufacturer's original unopened packing with seals intact. Store materials off the ground and under cover. Store roof goods on end. Handle materials to avoid damage or contamination. Protect building and adjacent areas from bitumen spillage and repair or replace damage at no additional cost to the Owner.

3.02 JOB CONDITIONS

A. Surfaces to which roofing is to be applied shall be smooth, even, sound, thoroughly clean and dry and free of defects which would adversely affect application of this work. Surfaces which do not meet the tolerances imposed within the sections governing their installation or which contain defects shall be repaired or replaced prior to installation of this work. Application of the roofing will be considered acceptance of the roof deck and approval by the Contractor as an acceptable base for roofing.

B. Coordinate with sheet metal, plumbing, electrical, HVAC and mechanical subcontractors to insure all roofing penetrations are in place prior to commencement of work.

C. Proceed with the roofing and associated work only when existing and forecasted weather conditions will permit the work to be performed as scheduled.

D. Prior to commencement of installation of the roofing, a pre-roofing conference is to be held by the Contractor. The Contractor, Roofing Contractor, Engineer, Owner's representative and the Roofing Manufacturer Representative shall be present to discuss any and all details, procedures and schedules.

3.03 GENERAL ROOFING INSTALLATION

A. Fabricate and install the built-up roofing system described herein in accordance with the roofing manufacturer's requirements.

B. Install insulation board to roofing in accordance with manufacturer recommendations for the appropriate roof deck. All seams shall be taped. Bends and covers shall be cut to fit snug.

C. Cant strips and tapered edge strips shall be provided at all intersections of roof surfaces with vertical walls, parapets, curbs, and accessories which do not have built-in cants, and shall be miter cut at corners. Cant strips and tapered edge strips shall be firmly attached in place prior to roof application.

D. Heat and apply asphalt to the roofing surface at temperatures recommended by the roofing manufacturer using apparatus capable of providing controlled temperatures. Asphalt which has been burned shall be discarded. Apply asphalt evenly, leaving no bare spots at a rate of 20 pounds per 100 square feet. Lap piles 4-inches at edge and 6-inches at ends. Embed cap sheet and lapped edges and ends in full hot application as steep asphalt. Nail through laps and along center of cap sheet; stagger nails. Broom in each ply to complete embedment. Solid mop heated bitumen under and between felts. Provide complete uniform coating. Felt shall not touch felt. Lay felts parallel to long dimension of

roof. Broom or press felts into heated bitumen providing tight, smooth lamination without wrinkles, buckles, kinks, fishmounts, pockets, or busters.

E. Flashing and all other connections of roofing with other work shall be completed before the application of the finishing surface. Bed all metal base flashings, gravel stops and similar items in roofing cement or bitumen after all felts are in place. Base flashings and gravel stops shall be stripped with two piles of roofing felt over the metal and embedded in roofing cement.

F. Coordinate work with sheet metal and the work of other trades. Finish areas as rapidly as practicable after completion of the other work. Incomplete roofing shall be protected from dampness by a light coat of asphalt when final coating is delayed.

3.04 ROOFING

A. Install a complete 20-year guaranteed roof fully complying with the specifications and recommendations of the roofing manufacturer.

B. At all edges and similar locations where seepage of bitumen is possible, the bitumen shall be applied to within 4-inches of such edge or location and this 4-inches is to be coated with a heavy layer of roof cement or asphalt, into which the felt is to be embedded.

3.05 SHEET METAL

A. Coordinate flashing and trim work with the installation of roofing, waterproofing, piping, existing building, and other adjoining and substrate work. Sheet metal shall be painted aluminum as specified in Section 7600.

3.06 PROTECTION AND CLEANING

A. The Contractor shall protect the work of other trades. Work damaged by an operation under this section shall be repaired or replaced at no expense to the Owner. All soiled adjoining surfaces shall be carefully cleaned. All debris and surplus material resulting from work under this section shall be removed from the premises.

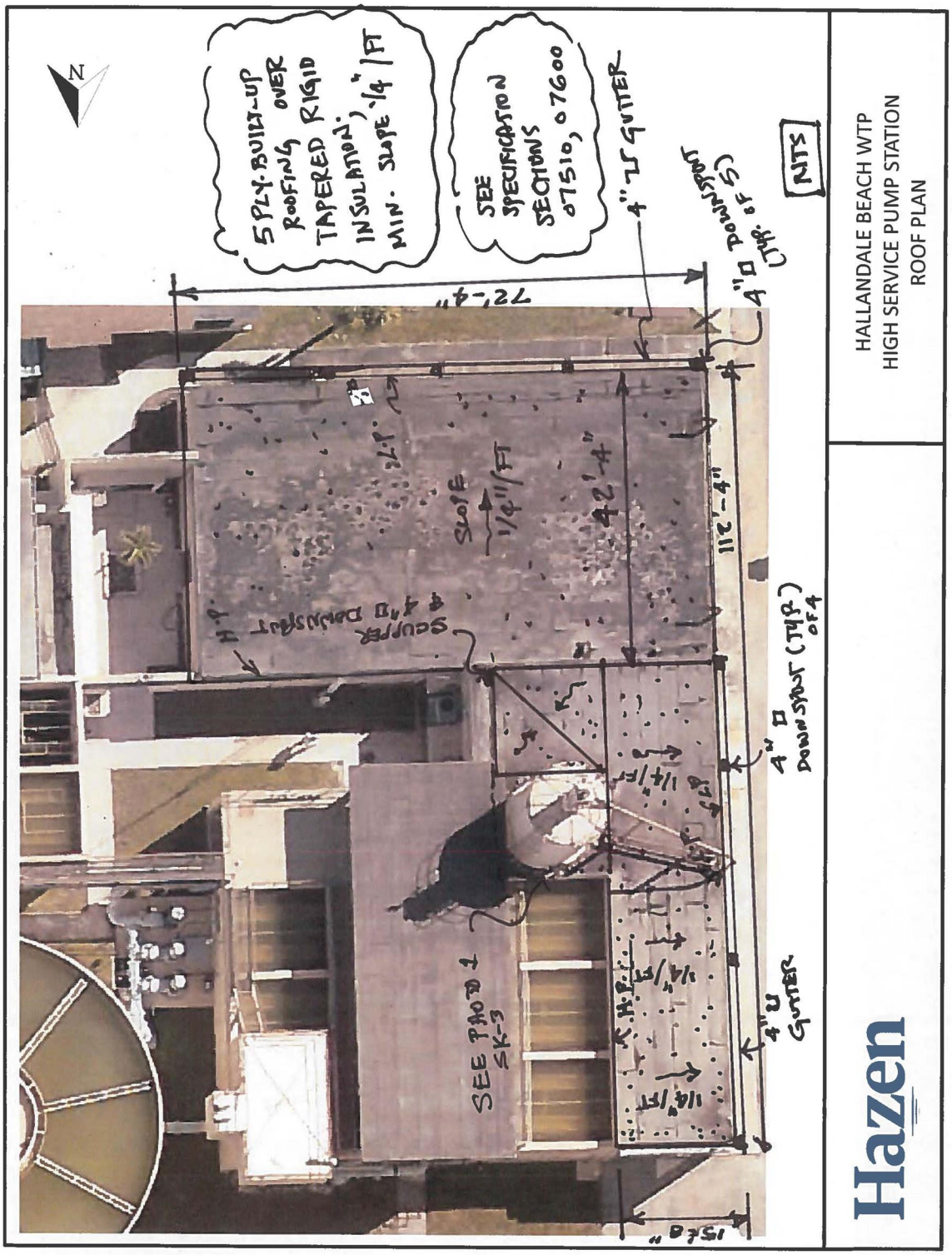
N
5 PLY BUILT-UP ROOFING OVER TAPERED RIGID INSULATION, MIN. SLOPE 1/4"/FT
SEE SPECIFICATION SECTIONS 07510, 07600
4" LF GUTTER
4" □ DOWNSPOUT (TYP. OF 5)
72'-4"
42'-4"
112'-4"
SLOPE 1/4"/FT
SCUPPER & 4" □ DOWNSPOUT
4" □ DOWNSPOUT (TYP. OF 4)
SEE PAGE 1 SK-3
4" LF GUTTER
15'-0"
NTS
HALLANDALE BEACH WTP
HIGH SERVICE PUMP STATION
ROOF PLAN
Hazen

Hazen

HALLANDALE BEACH WTP
HIGH SERVICE PUMP STATION
PHOTO 1: LIME SILO

SKETCH
SK-3

7/6/2018 Roof Plan.jpg https://mail.google.com/mail/u/0/?tab=wm#inbox/163db661d3c967ce?projector=1&messagePartId=0.1 1/1

- - END OF SECTION - -

SECTION 07600 - FLASHING AND ROOFING ACCESSORIES

PART 1 -- GENERAL

1.01 THE REQUIREMENT

A. The CONTRACTOR shall furnish and install roofing sheet metal work and related items necessary for a complete installation, as indicated on the Drawings and specified herein, including, but not limited to the following: base flashings; pitch pans, scuppers, and other sheet metal work in conjunction with roof drainage; pipe and stack flashings, and similar items where furnished by equipment suppliers; flashings for ducts, exhaust piping, equipment piping, conduit, etc., penetrating roofing that may be required.

1.02 REFERENCE SPECIFICATIONS, CODES AND STANDARDS

A. Except as otherwise shown or specified, comply with applicable manual by (SMACNA) Sheet Metal and A/C CONTRACTORs National Association.

B. Except as otherwise shown or specified, comply with the recommendations and instructions of the manufacturer of the sheet metal being installed.

C. All materials and installation shall conform or exceed the requirement of all local codes.

1.03 SUBMITTALS

A. Submit shop drawings and samples for review in accordance with the Section entitled "Submittals". Submittals shall be made together with the submittals specified under Section 07510. Provide sizes, shapes, thicknesses and types of materials, finishes fabrication details, anchors, connections and expansion joints in relation to adjacent work.

B. Submit a 12-inch square sample of wall flashing, angle clamping bar and other metal work specified. Deliver samples to a location onsite as directed by the ENGINEER.

1.04 GUARANTEE

A. The roofing guarantee specified in Section entitled "Built-Up Bituminous Roofing" shall cover flashings specified in this section. The flashing and edge details shall be as required by the roofing manufacturer to satisfy conditions of the guarantee. The details shown on the Drawings are intended to provide minimum standards required for the guarantee.

B. All roofing accessories, including flashing, fasteners, roof vents, curb details and other miscellaneous metals and accessories required for the installation shall be supplied by the roofing manufacturer or from other sources acceptable to the manufacturer selected for the installation so that the system guarantee will include all edges, penetrations and other details of the installation.

PART 2 -- PRODUCTS

2.01 FLASHING

A. Flashing shall be 0.040-inch aluminum, minimum, painted with colors selected by the City. The system shall be Presto Lock Facia System by Johns Manville, or equal.

B. Coping system shall be Presto Lock coping System by Johns Manville, or equal.

2.02 CANT STRIPS

A. Cant Strips shall be Fes-Cant Plus Cant Strip by Johns Manville or equal. Trips shall be a high density, laminated board made of high strength fibers and expanded peslites.

2.03 ROOF VENTS

A. Roof vents shall be provided for all roofing applications. One vent per 1000 square feet of applications shall be provided. One vent per 1000 square feet of roofing area shall be provided. The vents roofing area shall be provided. The vents shall be FP-10 One Way Roof Vents by Johns Manville or equal.

2.04 PLASTIC CEMENT

A. Plastic cement shall conform to ASTM D 2822 and shall be supplied by the roofing manufacturer.

2.05 FASTENERS

B. Nails, bolts, and nuts, screws, washers, etc., shall be stainless steel and shall be supplied by the roofing manufacturer.

2.06 ANCHORS

A. Anchors for fastening items to concrete shall be stainless steel bolts or screws by Powers, Red Head or equal of the size and type noted or required.

2.07 BITUMINOUS PLASTIC CEMENT

A. Bituminous plastic cement shall conform to FS SS-C-153.

2.08 ASPHALTIC MATERIAL

A. Asphalt primers shall conform to FS S-A-701. Coating asphalt shall have brushing consistency conforming to FS SS-R-451.

2.09 SCUPPERS, GUTTERS AND DOWNSPOUTS

A. Material: Minimum 0.050 inch thick aluminum, painted in colors selected by the City.

B. Design: Manufacture gutters tapered and notched to provide telescoping joint. Design gutters and downspouts to accommodate expected thermal movement.

C. Supports and Fasteners: Provide manufacturers' standard straps, brackets and fasteners, spaced at maximum 60-inches on center or as recommended by the manufacturer. Finish of supports, brackets and fasteners shall match gutter and downspout.

D. Accessories: Provide end caps, flashing, trim, and other items required for a complete installation.

E. Finish: Baked on Kynar, with 20 year warranty.

F. Color: Color for the downspout shall be selected by the ENGINEER from the Supplier's standard color chart.

2.10 SPLASH PADS

A. Furnish and install precast concrete splash pads at down spout locations.

PART 3 -- EXECUTION

3.01 SHIPPING, HANDLING AND STORAGE

A. Store materials off the ground to avoid damage. Protect from bitumen spillage and repair or replace damage at no additional cost to the COUNTY.

3.02 JOB CONDITIONS

A. Coordination: The CONTRACTOR shall coordinate with the roofing system, sheet metal, plumbing, electrical, HVAC and mechanical subcontractors to ensure that all items are in place prior to commencement of work.

B. Climatic Conditions: Proceed with the roofing and associated work only when existing and forecasted weather conditions will permit the work to be performed as scheduled.

3.03 SHEET METAL INSTALLATION

A. General: Coordinate metal flashing and trim work with the installation of roofing, waterproofing, piping, existing building, and other adjoining and substrate work. Surfaces to be coated shall be smooth and clean. The installer must examine the substrate and the conditions under which the metal flashing will be installed, and notify the CONTRACTOR in writing of any unsatisfactory conditions. Do not proceed with installation until unsatisfactory conditions have been corrected in a manner acceptable to the installer. Flanges or gravel stops, vent and other flashings, shall be bedded in hot asphalt, set on top of the roofing plies and reinforced with felt strips as specified. Work shall be water tight, with lines, arises and angles sharp and true. Surfaces shall be free from waves and buckles.

B. Fabrication: Fabricate and install work described herein in accordance with the applicable standard described and illustrated in the National Association, Inc. publication "Architectural Sheet Metal Manual".

C. Flashings: Base and all other flashings shall be watertight and of a bondable type.

D. Scuppers: Scuppers and the like, shall be fabricated as indicated on the Drawings, or equal, and properly installed.

E. Accuracy: Fabricate and install work with lines and corners of exposed units true and accurate. Form exposed faces flat and free from buckles, excessive waves and avoidable tool marks, considering the temper and reflectivity of the metal. Provide uniform, neat seams with minimum exposure of solder welds, and sealant. Except as otherwise shown, fold back the sheet metal to form a hem on the concealed side of exposed edges.

F. Fasteners: Conceal fasteners and expansion provisions wherever possible in exposed work, and locate so as to minimize the possibility of leakage. Cover and seal work as required for a tight installation. Fasten sheet metal items as indicated or required to provide rigid, secure installation free of warp. Fastenings shall be made in such a manner as not to impair the watertight integrity of the installation. Exposed face nailing will not be permitted.

G. Laps: For embedment of metal flanges in roofing or composition flashing or stripping, extend flanges for a minimum of 4-inch embedment. Lap seams of sheet metal in direction of flow. Single lock flat seams, heli-arc weld or double-lock and mallet flat. Lap seams occurring in members sloping 45 degrees or greater shall be lapped 4-inches minimum and be bedded in flashing cement. Provide loose-locked expansion joints a maximum of 20 feet and a minimum of 8 feet from corners. On vertical surfaces, lap 2 piece flashings a minimum of 3-inches.

H. Protection: Separate dissimilar metals from each other by painting each metal surface in the area of contact with a heavy application of bituminous coating, or by other permanent separation as recommended by the manufacturers of the dissimilar metals. The flashing subcontractor shall advise the CONTRACTOR of required procedures for protection of the completed flashing and trim. Furnish such advice for period of installation of other work, and also for the remainder of the construction period.

3.04 COORDINATION

A. Coordinate flashing work with the work of other trades. Adjacent work shall be kept clean and shall not be injured or defaced in any way.

3.05 PROTECTION AND CLEANING

A. The CONTRACTOR shall protect the work of other trades. Work damaged by an operation under this section shall be repaired or replaced at no expense to the COUNTY. All soiled adjoining surfaces shall be carefully cleaned.

B. All debris and surplus material resulting from work under this section shall be removed from the premises.

- END OF SECTION -

SECTION 07900 – JOINT FILLERS, SEALANTS AND CAULKING

PART 1 -- GENERAL

1.01 THE REQUIREMENT

A. Furnish labor, materials, equipment and appliances required for the complete execution of Work shown on the Drawings and specified herein.

1.02 REFERENCE SPECIFICATIONS, CODES AND STANDARDS

A. Without limiting the generality of the other requirements of the specifications, all work herein shall conform to the applicable requirements of the following documents. All referenced specifications, codes, and standards refer to the most current issue available at the time of Bid.

1. ASTM C-920 Elastomeric Joint Sealants
2. ASTM D-1056 Flexible Cellular Materials - Sponge or Expanded Rubber
3. SWRI Sealant and Caulking Guide Specification

1.03 SUBMITTALS

A. In accordance with the procedures and requirements set forth in Section 01300 – Submittals, submit the following:

1. Manufacturers literature and installation instructions.
2. Color samples of each type of sealant.

1.04 QUALITY ASSURANCE

A. Applicator shall be a company specializing in the installation of sealants with a minimum of five years experience.

1.05 DELIVERY, STORAGE AND HANDLING

A. Deliver materials in unopened labeled packages.

B. Store materials in location protected from freezing or damages.

C. Reject and remove from the site materials within broken or damaged packaging.

PART 2 -- PRODUCTS

2.01 MATERIALS

A. Sealants

1. Type 1: Multi-component, non-sag, low-modulus polyurethane rubber sealant meeting ASTM C-920, Type M, Grade NS, Class 25, use NT, M, A, and O. Capable of withstanding 50% in extension or compression such as Sikaflex-2C NS/SL, Sika Corporation, or Sonolastic NP-2, Sonneborn, or DynaTrol II by Pecora Corporation.

2. Type 2: Single component polyurethane sealant meeting ASTM C-920, Type S, Grade NS, Class 25, Use NT, M, A, and O. Capable of withstanding 25% in extension or compression such as Sikaflex 1A by Sika Corporation, DynaTrol 1-XL by Pecora Corporation, or Sonolastic NP-1 by BASF Construction Chemicals.

3. Type 3: Single component, low-modulus moisture curing silicone meeting ASTM C-920, Type S, Grade NS, Class 25, Use NT, M, G, and A. Capable of withstanding 50% extension and compression. Pecora 890 by Pecora Corporation, Sonolastic Omni Seal by BASF Construction Chemicals.

4. Type 4: Single component, mildew resistant, moisture-curing silicone meeting ASTM C-920, Type S, Grade NS, Class 25, Use NT, M, G, and A. Pecora 898 by Pecora Corporation, Sonolastic Omni Plus by BASF Construction Chemicals.

5. Type 5: Single component, acrylic latex meeting ASTM C-834. AC-20+ Silicone by Pecora Corporation, Sonneborn Sonolac by BASF Construction Chemicals.

6. Type 6: High grade butyl sealant meeting Federal Specification TT-S-00-1657. BC-158 by Pecora Corporation or equal.

7. Type 7: Multi-component chemical resistant polysulfide sealant conforming to ASTM C-920, Type M, Grade NS, Class 25 such as Deck-O-Seal by W.R. Meadows, Tammsflex by DuraJoint Concrete Accessories, or Synthacalk GC2+ by Pecora Corporation.

8. Type 8: Nonsag, Multi Component, traffic grade polyurethane sealant meeting ASTM C920, Type 19, Grade NS, Class 25, use T, M, A, and O. DynaTread by Pecora Corporation, Sonolastic Ultra by BASF Construction Chemicals.

B. Primer: Non-staining primer recommended by sealant manufacturer for the substrates on this project.

C. Backer Rod: Closed cell foam, nonreactive with caulking materials, non-oily, and approved by the sealant manufacturer. Minimum density shall be 2.00 pounds per cubic foot. Use no asphalt or bitumen-impregnated fiber with sealants.

D. Joint Cleaner: Recommended by sealant or caulking compound manufacturer.

E. Bond breaker: Either polyethylene film or plastic tape as recommended by the sealant manufacturer.

F. Color: Where manufacturer's standard colors do not closely match materials being sealed, provide a custom color.

PART 3 -- EXECUTION

3.01 QUALITY CONTROL

A. Coordinate work with details shown on approved shop drawings prepared by other trades.

B. Verify conditions in the field.

C. Schedule work to follow closely the installation of other trades.

D. Apply sealants and related items in temperatures and dry conditions recommended by the manufacturers.

E. Do not paint sealant, unless recommended by sealant and paint manufacturer.

3.02 PREPARATION

A. Protect finished surfaces adjoining by using masking tape or other suitable materials.

B. Clean and prime joints before starting any caulking or sealing work.

C. Thoroughly clean joints and spaces of mortar and other foreign materials. Cleaning agent shall be Xylol or similar non-contaminating solvent to remove any film from metal surfaces. Masonry or concrete surfaces shall be brushed or air jet cleaned.

D. Joint Requirements

1. All joints and spaces to be sealed in exterior work shall be less than 1/2 inch deep and not less than 1/4 inch wide. If joints in masonry are less than that specified herein, the mortar shall be cut out to the required width and depth. All joints and spaces to receive sealant shall be completely prepared and thoroughly dry before installation of sealant.

2. Unless otherwise specified, joints and spaces which are open to a depth of 1/2 inch or greater shall be solidly filled with back-up material to within 1/4 inch of the surface. Back-up material shall be packed tightly and made continuous throughout the length of the joints. Bond breaker shall be applied as required. If joints are less than 1/4 inch deep, the back-up material may be omitted, a bond breaker substituted and the joint completely filled with sealant. The back-up material shall not project beyond the 1/4 inch depth of the open space in any joint. The following width-to-depth ratio table shall be adhered to, unless otherwise recommended by manufacturer.

	Sealant Depth	
Joint Width	Minimum	Maximum
¼ inch	1/4 inch	1/4 inch
Over 1/4 inch to 1/2 inch	1/4 inch	Equal to width
Over 1/2 inch to 1 inch	1/2 inch	Equal to width

Over 1 inch to 2 inch	1/2 inch	1/2 of width

3.03 APPLICATION

A. Exercise care before, during, and after installation so as not to damage any material by tearing or puncturing. All finished work shall be approved before covering with any other material or construction.

B. Apply sealant by an approved type of gun except where the use of a gun is not practicable, suitable hand tools shall be used. Avoid applying the compound to any surface outside of the joints or spaces to be sealed. Mask areas where required to prevent overlapping of sealant.

C. All joints shall be waterproof and weathertight.

D. Point sealed joints to make a slightly concave joint, the edges of which are flush with the surrounding surfaces. Exposed joints in the interior side of the door and other frames shall be neatly pointed flush or to match adjacent jointing work.

E. Adjacent materials which have been soiled shall be cleaned immediately and the work left in neat and clean condition.

F. Comply with sealant manufacturer's written instructions except where more stringent requirements are shown or specified and except where manufacturer's technical representative directs otherwise.

3.04 ADJUSTMENT AND CLEANING

A. Remove misplaced sealant compounds promptly using methods and materials recommended by the manufacturer, as the work progresses.

B. Allow sealants to cure and remove protective edging, of doors, louvers, saddles windows etc. as directed by the Engineer.

3.05 SCHEDULE

Schedule of Sealants

Application	**Sealant**	**Color**
Vertical and horizontal expansion and construction joints in concrete structures unless noted otherwise herein or on Drawings.	Type 1	To closely match adjacent surfaces or mortar and as selected by the Owner.
Vertical and horizontal joints bordered on both sides by masonry, precast concrete, natural stone or other porous building material, unless noted otherwise herein or on Drawings.	Type 2	To closely match adjacent surfaces or mortar and as selected by the Owner.

Application	Sealant	Color
Vertical and horizontal joints bordered on both sides by painted metals, anodized aluminum, mill finished aluminum, PVC, glass or other non-porous building material.	Type 3	To closely match adjacent surfaces and as selected by the Owner.
Masonry expansion and control joints less than 1¼" wide.	Type 2	To closely match adjacent surfaces and as selected by the Owner.
Masonry expansion and control joints equal or greater than 1¼ inches wide and not to exceed 2”.	Type 1	To closely match adjacent surfaces and as selected by the Owner.
Interior – wood trim and finish joints.	Type 5	Color to be selected by Owner
Sanitary areas, joints in ceramic tile, around plumbing fixtures, countertops, and back splashes. See Note 1.	Type 4	To closely match adjacent surfaces and as selected by the Owner.
Perimeter sealing of doors, windows, louvers, piping, ducts, and electrical conduit. See Note 2.	Type 2 OR Type 3	To closely match adjacent surfaces and as selected by the Owner.
Below thresholds.	Type 6	Manufacturer's standard
Horizontal Joints exposed to vehicular or pedestrian traffic.	Type 8	To closely match adjacent surfaces.
Other joints indicated on the drawings or customarily sealed but not listed.	Type recommended by manufacturer	To closely match adjacent surfaces and as selected by the Owner.

Note 1. Sealant for Laboratory Countertop shall be as recommended by countertop manufacturer.

Note 2. Provide UL approved sealants for penetrations thru fire-rated walls and as specified in Section 07270.

Note 3. Sealants which will come in contact with potable water shall meet the requirements of NSF 61.

- END OF SECTION -

SECTION 08110 - STEEL DOORS AND FRAMES

PART 1 - GENERAL

1.01 THE REQUIREMENT

A The CONTRACTOR shall furnish and install steel doors and frames as specified herein and as required for a complete installation.

1.02 MANUFACTURERS

A. The steel doors and frames shall be as manufactured by Curries, Ceco, Ingersoll Rand, or equal.

1.03 RELATED WORK SPECIFIED ELSEWHERE

A. Section 08710 – Finish Hardware

B. Section 09900 – Painting

1.04 REFERENCES

A. Florida Building Code

B. UL 10B – Fire Tests of Door Assemblies

C. ASTM A366 – Specification for Steel, Sheet, Carbon, Cold-Rolled, Commercial Quality

D. NFPA 80 – Standard for Fire Doors and Windows

E. NFPA 101 – Life Safety Code

F. U.L. – Underwriter's Laboratories

G. WHI – Warnock Hersey International, Division of Inchcape Testing Services

H. ANSI/DHI A115- Series Specifications for Steel Door and Frame Preparation for Hardware

I. ANSI/SDI 100- Recommended Specifications: Standard Steel Doors and Frames

J. ASTM A153- Standard Specification for Zinc Coating (Hot-Dip) on Iron and Steel Hardware

K. ASTM A366/A 366M- Standard Specification for Steel, Sheet, Carbon, Cold-Rolled Commercial Quality

L. ASTM A525- Standard Specification for General Requirements for Steel Sheet, Zinc-Coated (Galvanized) by the Hot-Dip Process

M. ASTM E152- Standard Methods of Fire Tests of Door Assemblies

1.05 SUBMITTALS

A. The CONTRACTOR shall submit complete shop drawings to the ENGINEER for review in accordance with the Section entitled “Submittals.” Shop drawings shall indicate dimensions, elevations, construction details, assembly methods, hardware reinforcement and locations, gauges, finish, wall conditions and building location.

B. The submittal shall include the following:

1. Product cut sheets for frames, anchors, door panels and all finish hardware.

2. A complete door schedule indicating the masonry openings versus the proposed doors, doorframes and the associated door hardware. Prior to the submittal, all door openings shall be field-verified by the CONTRACTOR.

3. A complete hardware schedule conforming to the Section entitled "Finish Hardware," in compliance with product approval. Hardware schedule shall be submitted concurrent with door shop drawing.

4. Installation details, edge distances, material, size, and spacing of anchorage.

5. Locking arrangement.

6. Sealants.

7. Notice of Acceptance issued by Miami-Dade County or a Product Approval for High Velocity Hurricane Zones issued by the Florida Department of Business and Professional Regulation.

8. The ENGINEER will review and return the submittals to the CONTRACTOR. The CONTRACTOR shall then submit the accepted package to the Building Department having jurisdiction over the work for approval. No fabrication or installation shall begin until the Building Department approval is obtained by the CONTRACTOR. The City will not assume responsibility for any cost or schedule impacts due to the approval process of the Building Department. It is the CONTRACTOR’s responsibility to customize the submittals based on the Building Department’s published submittal processes.

1.06 QUALITY ASSURANCE

A. Comply with ANSI/SDI 100.

B. Locations where fire-rated door and frame assemblies are required, provide assemblies which comply with NFPA 80 and have been tested and labeled in accordance with ASTM E152 by agency acceptable to governing authorities.

C. Provide certificate or label for fire-rated doors which exceed sizes tested from an independent testing and inspection agency. Certificate or label shall indicate that door and frame assembly conforms to the requirements of the design.

1.07 DELIVERY, STORAGE AND HANDLING

A. The CONTRACTOR shall deliver, store, and handle doors and frames in a manner to prevent damage and deformation. Store on pallets at the job site and undercover to form weather tight enclosure. Spacers shall be provided between doors and frames to prevent metal-to-metal contact. Replace items damaged during delivery, storage, or handling.

PART 2 -- PRODUCTS

2.01 STEEL DOORS

A. The CONTRACTOR shall provide doors and frames from the same Manufacturer. All doors shall be of flush steel construction and 1-3/4 inch thick. Flush doors shall be constructed of two outer layers of ASTM A366 steel, over steel stiffeners if required, and filled with core material as follows:

1. Mineral Fiber Core sufficient to obtain a 250 degree Fahrenheit temperature rating in order to provide the required Fire Rating.

2. Doors and frame assembly shall have a maximum U value of 0.70.

B. Both lock and hinge rail edge of the door shall be welded, filled and ground smooth the full height of the door. Lock rail shall be one-piece full height 12-gauge pressed channel. Hinge rail shall be one-piece full height 12-gauge pressed channel, formed and tapped for hinges. Top and bottom of door shall have 12-gauge steel closure channels.

C. Minimum gauges for exterior face sheets of door shall be as follows:

1. SDI-100, Grade III, extra heavy-duty, Model 4, seamless, 16 gauge.

D. Comply with ANSI/DHI A115 series specifications for door and frame hardware preparation. Prepare door and frame using final hardware schedule and templates from hardware supplier.

2.02 STEEL DOOR FRAMES

A. Steel doorframes shall be fabricated of minimum 16-gauge cold rolled steel in accordance with ASTM A366. After fabrication frames shall be primed with light gray rust inhibitive primer. Paint color finish shall be selected by the ENGINEER at the time of the shop drawing submittal.

B. Standard floor knee shall be provided for anchorage to floor.

C. Three sided frames shall have angle spreaders secured to bottom of frame for rigidity during shipment.

D. Frame corners shall be internally reinforced, welded and ground smooth. Adequate reinforcement shall be provided for all hardware, drilled and tapped for field application. Dust clogging of tapped holes by mortar or plaster. Reinforcement shall also be provided for surface applied hardware for which drilling and tapping is done in the field. After fabrication, frame shall be degraded and then prime coated.

E. Punch single leaf frames to receive three silencers on lock jamb. Punch double leaf frames to receive one silencer at each leaf in head members.

2.03 ANCHORS

A. Jamb anchors shall be 12-gauge galvanized flat “T” anchors to suit frame size with legs not less than 2 inches x 10 inches. Set anchors a minimum every three masonry courses, a minimum of three per jamb at doors and in accordance with product approval.

B. For cast in place concrete or existing door openings, anchor frame jambs with 3/8-inch minimum counter-sunk bolts into expansion shield or inserts, with crush-proof sleeves. Provide a minimum of two per jamb. Anchors shall be in accordance with product approval.

C. Floor anchors at doors shall be minimum 16-gauge galvanized sheet steel at each jamb. Clip type anchors with two holes to receive fasteners shall be welded to bottom jambs. Floor anchors shall be in accordance with product approval.

2.04 FINISHES

A. Doors and frames shall be shop galvanized in accordance with the Section entitled "Galvanizing" and field painted per the Section entitled "Painting."

PART 3 -- EXECUTION

3.01 FRAME INSTALLATION

A. Frames shall be installed plumb, level, and true to line, rigidly secured in openings. Frames shall be installed in strict accordance with the tested prototype assembly details.

B. Frames in new masonry walls shall be set prior to beginning masonry work. Brace frames until permanent anchors are set. Frames shall be filled with masonry grout as masonry work progresses. Anchors shall be provided in accordance with SDI standards.

C. Frames in existing masonry walls shall be installed using countersunk bolts and expansion shields.

3.02 DOOR INSTALLATION

A. Doors shall be installed plumb, level and true to line. Hardware shall be applied and adjusted to achieve quiet and smooth operation. Installation shall be in accordance with the manufacturer’s recommendations.

B. Doors shall fit snugly and close without forcing or binding. Door clearances shall not exceed 1/8-inch at jambs and heads and meeting stiles at pairs of doors. Clearances between bottom of door and finished floor material or threshold shall not exceed 1/4-inch. Frames shall be manufactured and machined to within 1/32-inch for all dimensions.

3.03 PROTECTION

A. The CONTRACTOR shall protect installation from damage and touch up scratched areas with same paint used for shop coats. Damaged work shall be repaired or replaced.

3.04 DOOR SCHEDULE

A. Door schedules indicating the door marks, type of door, the approximate building wall openings and the calculated design wind pressures are shown on the Drawings.

- END OF SECTION

SECTION 08710 - FINISH HARDWARE

PART 1 -- GENERAL

1.01 THE REQUIREMENT

A. The CONTRACTOR shall furnish and install items known commercially as finish or door hardware that are required for swing, sliding, and folding doors, except special types of unique hardware specified in the same sections as the doors and door frames on which they are to be installed.

B. This Section includes the following:

1. Hinges
2. Key control systems
3. Lock cylinders and keys
4. Lock and latch sets
5. Bolts
6. Exit devices
7. Push/pull units
8. Closers
9. Overhead holders
10. Miscellaneous door control devices
11. Door trim units
12. Protection plates
13. Weatherstripping for exterior doors
14. Sound stripping for doors
15. Automatic drop seals (door bottoms)
16. Astragals or meeting seals on pairs of doors
17. Thresholds

1.02 RELATED WORK SPECIFIED ELSEWHERE

A. Section 08110 – Steel Doors and Frames

1.03 REFERENCE SPECIFICATIONS, CODES AND STANDARDS

A. Codes: All codes, as referenced herein, are specified in the Section entitled “Reference Standards.”

B. Commercial Standards

1. Underwriters’ Laboratories, Inc. (UL) requirements and approvals.

2. Hardware Institute (DHI) Recommended Procedure for Processing Hardware Schedules and Templates and Architectural Hardware Scheduling and Format

3. BHMA, Builder’s Hardware Manufacturers’ Association

C. Manufacturer’s Standards: In addition to the standards listed above, the finish hardware and its installation shall be accordance with the manufacturer’s published recommendations and specifications.

1.04 SUBMITTALS

A. General: Submit the following in accordance with the Section entitled "Submittals":

1. Product data including manufacturer’s technical product data for each item of door hardware, installation instructions, maintenance of operating parts and finish, and other information necessary to show compliance with requirements.

2. Final hardware schedule coordinated with doors, frames, and related work to ensure proper size, thickness, hand, function, and finish of door hardware.

a. Final Hardware Schedule Content: Based on hardware indicated, organize schedule into “hardware sets” indicating complete designations of every item required for each door or opening. Include the following information:

i. Type, style, function, size, and finish of each hardware item.

ii. Name and manufacturer of each item.

iii. Fastenings and other pertinent information.

iv. Location of each hardware set cross referenced to indications on Drawings, both on floor plans and in door and frame schedule.

v. Explanation of all abbreviations, symbols, and codes contained in schedule.

vi. Door and frame sizes and materials.

vii. Keying information.

b. Submittal Sequence: Submit final schedule at earliest possible date, particularly where acceptance of hardware schedule must precede fabrication of other work that is critical in the Project construction schedule. Include with schedule the product data, samples, shop drawings of other work affected by door hardware, and other information essential to the coordinated review of schedule.

c. Keying Schedule: Submit separate detailed schedule indicating clearly how the City's final instructions on keying of locks has been fulfilled.

3. If requested by the Engineer, submit samples of each type of exposed hardware unit in finish indicated and tagged with full description for coordination with schedule. Submit samples prior to submission of final hardware schedule.

a. Samples will be returned to the supplier. Units that are acceptable and remain undamaged through submittal, review, and field comparison process may, after final check of operation, be incorporated in the Work, within limitations of keying coordination requirements.

4. Templates for doors, frames, and other work specified to be factory prepared for the installation of door hardware. Check shop drawings of other work to confirm that adequate provisions are made for locating and installing door hardware to comply with indicated requirements.

1.05 QUALITY ASSURANCE

A. Single Source Responsibility: Obtain each type of hardware (latch and lock sets, hinges, closers, etc.) from a single manufacturer. All door locks shall be keyed to a keying schedule developed by the City and the manufacturer.

B. Supplier Qualifications: A recognized architectural door hardware supplier, with warehousing facilities in the Project's vicinity, that has a record of successful in-service performance for supplying door hardware similar in quantity, type, and quality to that indicated for this Project and that employs an experienced architectural hardware consultant (AHC) who is available to the City, Engineer, and the CONTRACTOR, at reasonable times during the course of the Work, for consultation.

1. Require supplier to meet with CITY to finalize keying requirements and to obtain final instructions in writing.

2. Supplier shall be an authorized factory distributor of all specified products.

C. Fire-Rated Openings: Provide door hardware for fire-rated openings that complies with NFPA Standard No. 80 and requirements of authorities having jurisdiction. Provide only items of door hardware that are listed and are identical to products tested by UL, Warnock Hersey, FM, or other testing and inspecting organization acceptable to authorities having jurisdiction for use on types and sizes of doors indicated in compliance with requirements of fire-rated door and door frame labels.

1.06 PRODUCT HANDLING

A. Tag each item or package separately with identification related to final hardware schedule, and include basic installation instructions with each item or package.

B. Packaging of door hardware is responsibility of supplier. As material is received by hardware supplier from various manufacturers, sort and repackage in containers clearly marked with appropriate hardware set number to match set numbers of approved hardware schedule. Two or more identical sets may be packed in same container.

C. Inventory door hardware jointly with representatives of hardware supplier and hardware installer until each is satisfied that count is correct.

D. Deliver individually packaged door hardware items promptly to place of installation (shop or Project site).

E. Provide secure lock-up for door hardware delivered to the Project, but not yet installed. Control handling and installation of hardware items that are not immediately replaceable so that completion of the Work will not be delayed by hardware losses both before and after installation.

1.07 MAINTENANCE

A. Maintenance Tools and Instructions: Furnish a complete set of specialized tools and maintenance instructions as needed for City's continued adjustment, maintenance, and removal and replacement of door hardware.

PART 2 -- PRODUCTS

2.01 MANUFACTURERS

A. Manufacturers: Subject to compliance with requirements, provide products by one of the following manufacturers or equal subject to approval by the ENGINEER and City:

1. Butts and Hinges:

   a. Hager Hinge Co.

   b. McKinney Products Co.

   c. Stanley Hardware, Div. Stanley Works.

2. Cylinders and Locks:

   a. Sargent Manufacturing Company.

   b. Schlage Lock, Div. Ingersoll-Rand Door Hardware Group.

3. Exit/Panic Devices:

   a. Sargent Manufacturing Company.

b. Von Duprin, Div. Ingersoll-Rand Door Hardware Group.

4. Push/Pull Units:

   a. H.B. Ives, A Harrow Company.

   b. Quality Hardware Mfg. Co., Inc.

   c. Rockwood Mfg. Co.

5. Overhead Closers:

   a. LCN, Div. Ingersoll-Rand Door Hardware Group.

   b. Sargent Manufacturing Company.

6. Bolts:

   a. H.B. Ives, A Harrow Company.

   b. Quality Hardware Mfg. Co., Inc.

   c. Rockwood Mfg. Co.

7. Door Trim Units:

   a. H.B. Ives, A Harrow Company.

   b. Quality Hardware Mfg. Co., Inc.

   c. Rockwood Mfg. Co.

8. Kick, Mop, and Armor Plates:

   a. Rockwood Mfg. Co.

   b. H.B. Ives, A Harrow Company.

   c. Quality Hardware Mfg Co., Inc.

9. Key Control System:

   a. Key Control Systems, Inc.

   b. Telkee Inc.

10. Thresholds, Door Stripping and Seals, Automatic Drop Seals, Astragals:

   a. National Guard Products, Inc.

   b. Pemko Manufacturing Co., Inc.

   c. Reese Enterprises, Inc.

2.02 SCHEDULED HARDWARE

A. Requirements for design, grade, function, finish, size, and other distinctive qualities of each type of finish hardware are indicated in the “Hardware Schedule” at the end of this Section. Products are identified by using hardware designation numbers of the following:

1. Manufacturer’s Product Designations: The product designation and name of one manufacturer are listed for each hardware type required for the purpose of establishing minimum requirements. Provide either the product designated or, where more than one manufacturer is specified under the Article “Manufacturers” in Part 2 for each hardware type, the comparable product of one of the other manufacturers that complies with requirements.

2. ANSI/BHMA designations used elsewhere in this Section or in schedules to describe hardware items or to define quality or function are derived from the following standards. Provide products complying with these standards and requirements specified elsewhere in this Section.

   a. Butts and Hinges: ANSI/BHMA A156.1.

   b. Bored and Preassembled Locks and Latches: ANSI/BHMA A156.2.

   c. Exit Devices: ANSI/BHMA A156.3.

   d. Door Controls - Closers: ANSI/BHMA A156.4.

   e. Auxiliary Locks and Associated Products: ANSI/BHMA A156.5.

   f. Architectural Door Trim: ANSI/BHMA A156.6.

   g. Template Hinge Dimensions: ANSI/BHMA A156.7.

   h. Door Controls - Overhead Holders: ANSI/BHMA A156.8.

   i. Interconnected Locks and Latches: ANSI/BHMA A156.12.

   j. Mortise Locks and Latches: ANSI/BHMA A156.13.

   k. Sliding and Folding Door Hardware: ANSI/BHMA A156.14.

   l. Closer Holder Release Devises: ANSI/BHMA A156.15.

   m. Auxiliary Hardware: ANSI/BHMA A156.16.

   n. Self-Closing Hinges and Pivots: ANSI/BHMA A156.17.

   o. Materials and Finishes: ANSI/B BHMA A156.18.

2.03 MATERIALS AND FABRICATION

A. Manufacturer’s Name Plate: Do not use manufacturers’ products that have manufacturer’s name or trade name displayed in a visible location (omit removable nameplates) except in conjunction with required fire-rated labels and as otherwise acceptable to Architect.

1. Manufacturer's identification will be permitted on rim of lock cylinders only.

B. Base Metals: Produce hardware units of basic metal and forming method indicated using manufacturer's standard metal alloy, composition, temper, and hardness, but in no case of lesser (commercially recognized) quality than specified for applicable hardware units for finish designations indicated.

C. Fasteners: Provide hardware manufactured to conform to published templates, generally prepared for machine screw installation. Do not provide hardware that has been prepared for self-tapping sheet metal screws, except as specifically indicated.

D. Furnish screws for installation with each hardware item. Provide Phillips flat-head screws except as otherwise indicated. Finish exposed (exposed under any condition) screws to match hardware finish or, if exposed in surfaces of other work, to match finish of this other work as closely as possible including "prepared for paint" surfaces to receive painted finish.

E. Provide concealed fasteners for hardware units that are exposed when door is closed except to the extent no standard units of type specified are available with concealed fasteners. Do not use thru-bolts for installation where bolt head or nut on opposite face is exposed in other work unless their use is the only means of reinforcing the work adequately to fasten the hardware securely. Where thru-bolts are used as a means of reinforcing the work, provide sleeves for each thru-bolt or use hex screw fasteners.

2.04 HINGES, BUTTS, AND PIVOTS

A. Templates: Except for hinges and pivots to be installed entirely (both leaves) into wood doors and frames, provide only template-produced units.

B. Screws: Provide Phillips flat-head screws complying with the following requirements:

1. For metal doors and frames install machine screws into drilled and tapped holes.

2. Finish screw heads to match surface of hinges or pivots.

C. Hinge Pins: Except as otherwise indicated, provide hinge pins as follows:

1. Out-Swing Exterior Doors: Nonremovable pins.

2. Interior Doors: Nonrising pins.

3. Tips: Flat button and matching plug, finished to match leaves, except where hospital tip (HT) is indicated.

D. Number of Hinges: Provide number of hinges indicated but not less than 3 hinges per door leaf for doors 90 inches or less in height and one additional hinge for each 30 inches of additional height.

1. Fire-Rated Doors: Not less than 3 hinges per door leaf for doors 86 inches or less in height with same rule for additional hinges.

2.05 LOCK CYLINDERS AND KEYING

A. Review the keying system with the City and provide the type required (master, grandmaster or great-grandmaster), either new or integrated with CIty's existing system.

B. Equip locks with manufacturer's special 6-pin tumbler cylinder with construction masterkey feature that permits voiding of construction keys without cylinder removal.

C. Metals: Construct lock cylinder parts from brass or bronze, stainless steel, or nickel silver.

D. Comply with City's instructions for master keying and, except as otherwise indicated, provide individual change key for each lock that is not designated to be keyed alike with a group of related locks.

E. Key Material: Provide keys of nickel silver only.

F. Key Quantity: Furnish 2 change keys for each lock, 5 master keys for each master system, and 5 grand masterkeys for each grandmaster system.

   1. Deliver keys to City.

2.06 KEY CONTROL SYSTEM

A. Provide a key control system including envelopes, labels, tags with self-locking key clips, receipt forms, 3-way visible card index, temporary markers, permanent markers, and standard metal cabinet, all as recommended by system manufacturer, with capacity for 150 percent of the number of locks required for the Project.

   1. Provide hinged-panel type cabinet for wall mounting.

2.07 LOCKS, LATCHES, AND BOLTS

A. Strikes: Provide manufacturer's standard wrought box strike for each latch or lock bolt, with curved lip extended to protect frame, finished to match hardware set, unless otherwise indicated.

   1. Provide flat lip strikes for locks with 3-piece, antifriction latchbolts as recommended by manufacturer.

   2. Provide extra-long strike lips for locks used on frames with applied wood casing trim.

   3. Provide recess type top strikes for bolts locking into frame heads, unless otherwise indicated.

   4. Provide dust-proof strikes for foot bolts, except where special threshold construction provides nonrecessed strike for bolt.

   5. Provide roller type strikes where recommended by manufacturer of the latch and lock units.

B. Lock Throw: Provide 5/8-inch minimum throw of latch on pairs of doors. Comply with UL requirements for throw of bolts and latch bolts on rated fire openings.

1. Provide 1/2-inch minimum throw of latch for other bored and preassembled types of locks and 3/4-inch minimum throw of latch for mortise locks. Provide 1-inch minimum throw for all dead bolts.

C. Flush Bolt Heads: Minimum of 1/2-inch-diameter rods of brass, bronze, or stainless steel with minimum 12-inch-long rod for doors up to 7 feet in height. Provide longer rods as necessary for doors exceeding 7 feet in height.

D. Rabbeted Doors: Where rabbeted door stiles are indicated, provide special rabbeted front on lock and latch units and bolts.

2.08 PUSH/PULL UNITS

A. Exposed Fasteners: Provide manufacturer's standard exposed fasteners for installation, thru-bolted for matched pairs but not for single units.

2.09 CLOSERS AND DOOR CONTROL DEVICES

A. All closers shall be constructed with rack and pinion with compression springs. The Closing speed, latching speed and backcheck shall be controlled by key operated valves. The delay action feature shall be a separate key operated valve. The closer body shall be manufactured of high performance cast aluminum silicon alloy. All door closers shall be suitable for standard, top jamb, track, corner bracket and parallel arm applications when provided with proper brackets and arms. The closer should be adjustable to meet the range of sizes required for opening and closing forces.

B. Access-Free Manual Closers: Where manual closers are indicated for doors required to be accessible to the physically handicapped, provide adjustable units complying with ANSI A117.1 provisions for door opening force and delayed action closing.

2.10 DOOR TRIM UNITS

A. Fasteners: Provide manufacturer's standard exposed fasteners for door trim units consisting of either machine screws or self-tapping screws.

2.11 WEATHERSTRIPPING AND SEALS

A. General: Provide continuous weatherstripping on exterior doors and smoke, light, or sound seals on interior doors where indicated or scheduled. Provide noncorrosive fasteners for exterior applications and elsewhere as indicated.

2.12 THRESHOLDS

A. General: Except as otherwise indicated, provide standard metal threshold unit of type, size, and profile as shown or scheduled.

2.13 HARDWARE FINISHES

A. The designations used in schedules and elsewhere to indicate hardware finishes are the industry-recognized standard commercial finishes.

1. Stainless steel, US32D unless otherwise noted.

2. Closers shall have a USP finish unless otherwise noted.

PART 3 -- EXECUTION

3.01 INSTALLATION

A. Mount hardware units at heights indicated in following applicable publications, except as specifically indicated or required to comply with governing regulations:

1. “Recommended Locations for Builders Hardware for Standard Steel Doors and Frames” by the Door and Hardware Institute.

B. Install each hardware item in compliance with the manufacturer's instructions and recommendations. Where cutting and fitting is required to install hardware onto or into surfaces that are later to be painted or finished in another way, coordinate removal, storage, and reinstallation or application of surface protection with finishing work specified in the Division 9 Sections. Do not install surface-mounted items until finishes have been completed on the substrates involved.

C. Set units level, plumb, and true to line and location. Adjust and reinforce the attachment substrate as necessary for proper installation and operation.

D. Drill and countersink units that are not factory prepared for anchorage fasteners. Space fasteners and anchors in accordance with industry standards.

E. Set thresholds for exterior doors in full bed of butyl-rubber or polyisobutylene mastic sealant.

F. Weatherstripping and Seals: Comply with manufacturer's instructions and recommendations to the extent installation requirements are not otherwise indicated.

3.02 ADJUSTING, CLEANING, AND DEMONSTRATING

A. Adjust and check each operating item of hardware and each door to ensure proper operation or function of every unit. Replace units that cannot be adjusted to operate freely and smoothly or as intended for the application made.

1. Where door hardware is installed more than one month prior to acceptance or occupancy of a space or area, return to the installation during the week prior to acceptance or occupancy and make final check and adjustment of all hardware items in such space or area. Clean operating items as necessary to restore proper function and finish of hardware and doors. Adjust door control devices to compensate for final operation of heating and ventilating equipment.

B. Clean adjacent surfaces soiled by hardware installation.

C. Instruct City's personnel in the proper adjustment and maintenance of door hardware and hardware finishes.

D. Six-Month Adjustment: Approximately six months after the date of Substantial Completion, the Installer, accompanied by representatives of the manufacturers of latchsets and locksets and of door control devices, and of other major hardware suppliers, shall return to the Project to perform the following work:

1. Examine and re-adjust each item of door hardware as necessary to restore function of doors and hardware to comply with specified requirements.

2. Consult with and instruct City's personnel in recommended additions to the maintenance procedures.

3.03 HARDWARE SCHEDULE

A. General: Provide hardware for each door to comply with requirements of this Section, hardware set numbers indicated in the door schedule on the Drawings, and in the following schedule of hardware sets.

Hardware Set No. 1 – Single Leaf Exit Door

3 EA[1]	Hinge	McKinney	T4A3386	4.5 x 4.5 NRP	32 D
1 EA	Exit Device	Sargent	HC8813ETJ		32 D
1 EA	Closer	Dorma	P640 STA TB		AL
1 EA	Threshold	Pemko	2005AS		AL
1 EA	Jamb Seal	Pemko	S88D		AL
1 EA	Stop	Rockwood	460		32 D
1 EA	Kickplate	Quality	48		SS

[1]Use 4 Nos. for doors greater than 7 feet high

Hardware Set No. 2 – Double Leaf Exit Door

6 EA[1]	Hinge	McKinney	T4A3386	4.5 x 4.5 NRP	32 D
1 EA	Exit Device	Sargent	HC4-8773 ETJ		32 D
1 EA	Closer	Dorma	8616 STA ARP FMC SN		32 D
2 EA	Surface Bolt	Sargent	988		32 D
2 EA	Stops	Rockwood	460		26 D
1 EA	Threshold	Pemko	2005 AS		AL
1 EA	Jamb Seal	Pemko	303 AS		AL
2 EA	Kickplate	Quality	48		32D

[1]Use 8 Nos. for doors greater than 7 feet high

- END OF SECTION -

SECTION 09210 – STUCCO

PART 1 GENERAL

1.01 SCOPE OF WORK

A. The Contractor shall furnish and install stucco on the exterior of masonry and concrete wall surfaces including exterior finish concrete columns and beams as shown on the Drawings and specified herein.

B. Stucco will be the final architectural treatment prior to painting and therefore it shall provide a decorative, durable, consistent, and even finish with no imperfections of the substrate telegraphed through the stucco.

1.02 RELATED WORK

A. Except as modified by governing local codes and by this Specification, conform to provisions and recommendations of the following standards for materials and application:

1. ANSI 42.2, Portland Cement Plastering and Stucco
2. Portland Cement Plaster (Stucco) Manual
3. ASTM C 926

1.03 SUBMITTALS

A. Manufacturer's Data: Submit three copies of manufacturer's specifications and installation instructions for each material required, including other data as may be required to show compliance with these specifications.

B. Sample: For final review of each texture, complete one wall area on job site five working days minimum before proceeding with the work.

C. Applicator shall show proof of specializing in lath and plaster work for a minimum of five years.

1.04 DELIVERY, STORAGE AND HANDLING

A. Source of Supply: Do not change brands or source of supply for materials during course of work.

B. Protection: Deliver materials except for sand and water in manufacturer's unopened containers fully identified with name, brand, type and grade. Protect stucco materials from contamination and dampness until used. Store in a dry ventilated space off the ground. Protect lime putty from sun exposure and prevent excessive evaporation when stored.

PART 2 PRODUCTS

2.01 PRODUCTS

A. Aggregates: Sand meets the requirements of ASTM C 897.

B. Fiber Reinforcement: Fiber reinforcement shall be fiberglass "Fibermesh", or equal, ½-inch long, free from grease, oil, dirt, and other impurities. Separate before use.

C. Metal Lath: Shall be galvanized steel diamond mesh.

D. Corner beads, reveals, control joints, stucco stops, and other exterior accessories shall be PVC material conforming to the newest editions of ASTM D1784 and C1063. Corner beads shall be provided with 2 ½" x 2 ½" legs.

E. Cement: Masonry cement conforming to ASTM C91-Type.

F. Lime: Shall be hydrated, ASTM C 207, Type S.

G. Bonding Agent: Shall be Lanco CB-1000 or equal.

2.02 MIXES

A. General

1. All mixes are by volume unless otherwise specified. All mix proportions are suggestive only; variations to meet local conditions and achieve desired finish are permitted within limits specified in ASTM C926.
2. Water shall be potable and free from deleterious materials which would impair the work and from a source approved by Engineer.

B. Stucco

1. Premix by Titan or equal
2. 1 part Masonry Cement
3. Bonding Agent
4. 2½ to 4 parts aggregate
5. 1 lb. fiber per sack of cement*
   *Brown and scratch coats shall be installed with fiber.

PART 3 EXECUTION

3.01 EXAMINATION OF SUBSTRATES

A. Examine substrates and the conditions under which the stucco work is to be installed. Do not proceed until unsatisfactory conditions detrimental to the proper and timely completion of the work have been corrected.

B. The surface to receive the stucco repair system shall be structurally sound, clean, dry and free of residual moisture or damage from moisture. Surfaces shall be properly cured and free of dirt, dust, oil, grease, mildew, fungus, laitance, efflorescence and any other contaminant. Any surfaces not in compliance shall be corrected prior to installation of the stucco repair system:

1. Surface contaminants, paint and debris must be removed by minimum 5,000 psi water blasting or other appropriate means acceptable to the Engineer.

2. If patching, filling or leveling of irregularities is required, repair with appropriate leveling material to thickness required to achieve a smooth, plumb surface.

C. Apply bonding agent to all concrete and masonry surfaces prior to installing new stucco. Bonding agent shall be cured per the manufacturer's recommendation prior to applying stucco, and if the curing timeframe was exceeded, bonding agent will have to be reapplied.

3.02 INSTALLATION

A. General: Apply 3-coat work consisting of ¼-inch scratch coat, ¼-inch brown coat and 1/8-inch finish coat for total of 5/8-inch. Apply finish coat with a reasonably uniform thickness over entire surface, with vertical surfaces flat, straight, and plumb. Make interior angles square, and make corners square but slightly rounded. Where casing beads do not occur at the juncture of stucco and hollow metal frames, cut a groove in the base coat and later in the finish coat to minimize the appearance of cracks at these joints.

B. The Engineer will field locate damaged stucco areas by visual inspections and/or by knocking on the outer stucco surface for a sound test. Damaged areas will be marked for repairs.

C. Stucco Repair of Wall Sections:

1. Properly prepare stucco surfaces by cutting and removing cracked and loose stucco. Saw cut existing stucco at an angle of approximately 45 degrees with the surface before installing new stucco. Prepare the substrate as per Section 3.01.

2. Apply stucco by trowel to a maximum 1/4 inch thickness in one application. Apply second coat and third coat, if necessary, to achieve a smooth, plumb surface and flush with adjoining surfaces. Damp cure the first coat for 48 hours, then apply the second coat. Damp cure by lightly fogging the installed area for at least 48 hours after initial set (usually within the first 1 to 4 hours after installation). Allow to dry prior to application of primer or finish.

3. Replace damaged corner beeds, stucco stops, reveals and lath mesh.

D. Crack Repair:

1. Cracks that are larger than 1/8 inch wide shall be repaired by cutting a v-shaped groove on the exterior wall surface along the crack length and filling the groove with an epoxy based grout prior to re-coating.

2. If cracks are widespread throughout the wall area, remove the cracked stucco section and repair as described in Section 3.02-B-1.

3. Water bearing structures that have cracked concrete shall be injected with crack injection epoxy to prevent leaks.

E. Mixing: Use mechanical mixers for mixing stucco; small batches may be hand mixed. Do not use caked or lumped material. Clean mechanical mixers, mixing boxes, and tools after mixing each batch; keep free of stucco from previous mixes. Thoroughly mix stucco with proper amount of water until uniform in color and consistency. Tempering of stucco will not be permitted; discard stucco which has begun to stiffen. Provide waterproof protection under mixer.

F. Application

1. Apply corner lath and/or strip lath at all junctures of dissimilar substrate materials (masonry-concrete) before proceeding with base coat of stucco work.
2. Application shall be by hand. Limit machine application to base coats, except where machine texture finish is specified.

3.03. FIELD QUALITY CONTROL

A. Patching

1. Work containing cracks, blisters, pits, checks, or discoloration will not be accepted. Remove such work including rejected work, and replace with new. Patching of defective work permitted only after notification of Engineer.
2. Perform cutting, patching, repairing, and pointing-up operations neatly and thoroughly. Repair the cracks and indented surfaces by moistening the stucco and filling with new material, trawled or tamped flush with adjoining surfaces. Point-up and finish surfaces around fixtures, outlet boxes, piping, fittings, tile, and other work flush with adjacent stucco. Where new stucco adjoins stucco which has been installed more than 48 hours, cut existing stucco at an angle of approximately 45 degrees with the surface before installing new stucco.

3.04 CLEANING AND PROTECTION

A. Make provisions to minimize spattering of stucco on other work. Promptly clean windows and other surfaces which have been soiled.

B. Protect stucco from the weather, premature drying, dirt, dust, marring, or other damage throughout the construction period so it will be without any indication of damage at time of acceptance.

- END OF SECTION -

SECTION 09805 – REMOVAL OF LEAD-CONTAINING PAINT

PART 1 -- GENERAL

1.01 SCOPE

A. Attachment A, titled "LEAD PAINT SURVEY REPORT" indicates that certain painted surfaces contain lead.

B. This Section covers the removal and disposal of paint from surfaces coated with lead-containing paint. The objective is to create a work area that is safe for workers and occupants during the removal of lead-containing paint items, and to properly dispose of lead-containing paint items, while complying with all applicable Federal, State and local regulations governing the removal and disposal of lead-containing painted items.

C. Furnish all labor, equipment and materials, and perform all operations necessary for the removal, containment, cleanup and disposal of all lead-containing paint debris and items indicated on the drawings to be removed. CONTRACTOR shall obtain any required permits and payment of any fees in connection with the Project. CONTRACTOR shall perform his own quality control, administer and supervise his work force as specified herein.

D. CONTRACTOR shall comply with all laws, ordinances, rules, and regulations of Federal, State and local authorities regarding worker protection during removal, handling, storing, transporting, and disposing of lead-containing waste materials. CONTRACTOR shall submit matters requiring interpretation of standards to the appropriate administrative agency for resolution before starting removal work.

1.02 REFERENCE SPECIFICATIONS, CODES AND STANDARDS

A. The publications listed below form a part of these Specifications to the extent referenced. The publications are referred to in the text by basic designation only. The list is not inclusive of all standards applicable to the project.

B. Code of Federal Regulations Publications:

29 CFR 1910 - Occupational Safety and Health Standards

29 CFR 1926 - Safety and Health Regulations for Construction

40 CFR 117 - Determination of Reportable Quantities for Hazardous Substances

40 CFR 241 - Guidelines for the Land Disposal of Solid Wastes

40 CFR 261 - Identification and Listing of Hazardous Waste

40 CFR 262 - Standards Applicable to Generators of Hazardous Waste

40 CFR 263 - Standards Applicable to Transporters of Hazardous Waste

40 CFR 268 - Land Disposal Restrictions

40 CFR 302 - Designation, Reportable Quantities, and Notification

C. Occupational Safety and Health Administration Publication:

PUB 3126 - Working with Lead in the Construction Industry

D. National Institute of Occupational Safety and Health Publication:

Method 7082 - Lead

E. American Society of Testing and Materials Publications:

ASTM D 3335 - Test Method for Low Concentrations of Lead, Cadmium and Cobalt in Paint by Atomic Absorption Spectroscopy

F. Environmental Protection Agency Publications:

SW-846 - Test Methods for Evaluating Solid Waste – Physical/Chemical Methods

Method 3050 - Acid Digestion of Sediments, Sludges and Soils

G. Society For Protective Coatings Publications:

Guide 6I (CON) - Guide for Continuing Debris Generated During Plant Removal Operations

Guide 7I (DIS) - Guide for the Disposal of Lead-Contaminated Surface Preparation Debris

1.03 DEFINITIONS

A. Action Level: Employee exposure, without regard to use of respirators, to an airborne concentration of lead of 30 micrograms per cubic meter of air averaged over an 8-hour period in an occupational or industrial environment.

B. Competent Person (CP): As used in this section, refers to a person employed by the Contractor who is trained in the recognition and control of lead hazards in accordance with current federal, State, and local regulations.

C. Eight-Hour Time Weighted Average (TWA): Airborne concentration of lead to which an employee is exposed, averaged over an 8-hour workday indicated in 29 CFR 1926.62

D. Lead Containing Paint (LCP): Lead-based paint or other similar surfaces or coatings containing lead or lead compound which contain in excess of 0.06% lead by weight and are applicable to OSHA standard 29 CFR 1926.62. Any condition that causes exposure to lead from lead-contaminated dust, lead-contaminated soil, lead-based paint that is deteriorated or present in accessible surfaces, friction surfaces, or impact surfaces that would result in adverse human health effects.

E. Lead Control Area: A demarcated, enclosed area or structure constructed as a temporary containment equipped with HEPA filtered local exhaust, which prevents the spread of lead dust, paint chips, or debris existing as a condition of lead-based paint

removal operations. The lead control area is also isolated by physical boundaries to prevent unauthorized entry of personnel.

F. Lead Permissible Exposure Limit (PEL): Fifty micrograms per cubic meter of air as an 8-hour time weighted average as determined by 29 CFR 1926.62. If an employee is exposed for more than eight hours in a workday, the PEL shall be determined by the following formula:

PEL (micrograms/cubic meter of air) = 400 / no. hours worked per day

G. Personal Sampling: Sampling of airborne lead concentrations within the breathing zone of an employee to determine the 8-hour time weighted average concentration in accordance with 29 CFR 1926.62. Samples shall be representative of the employees' work tasks. Breathing zone shall be considered an area within a hemisphere, forward of the shoulders, with a radius of 6 to 9 inches and centered at the nose or mouth of an employee.

H. Physical Boundary: Area physically roped or partitioned off around an enclosed lead control area to limit unauthorized entry personnel. As used in this section "inside boundary" shall mean the same as "outside lead control area but inside boundary".

1.04 SUBMITTALS

A. The following items identified in this Article shall be submitted in accordance with Section 01300 entitled "Submittals".

B. Work Plan: CONTRACTOR shall submit a detailed LCP removal work plan of the work procedures to be used in the containment, ventilation, decontamination, removal and disposal of LCP within seven days of the date of the Notice to Proceed and prior to the start of any removal work. The LCP removal work plan shall meet the applicable requirements of 29 CFR 1926. Prior to beginning work, CONTRACTOR shall meet ENGINEER to discuss in detail the removal work plan, including removal, containment, ventilation, daily work procedures, worker protection, safety precautions and disposal of waste.

C. Containment Plan: CONTRACTOR shall submit a detailed Containment Plan sealed by a Professional Engineer, registered in the State of Florida.

D. Ventilation Plan: CONTRACTOR shall submit a detailed Ventilation Plan signed and sealed by a Professional Engineer, registered in the State of Florida.

E. Manufacturer's Catalog Plan: CONTRACTOR shall submit manufacturer's data on:

1. Respirators, filters and protective clothing.

2. Containment materials.

3. Ventilation materials and equipment.

4. Other materials and equipment identified in plans submitted by CONTRACTOR.

F. Test Reports: Lead dust sampling shall be completed by CONTRACTOR and results reviewed by CONTRACTOR within 24 hours of the time taken. CONTRACTOR shall notify ENGINEER immediately of any exposures to workers, or others to lead dust in excess of the OSHA acceptable limits. CONTRACTOR shall submit air monitoring results to ENGINEER within three working days of the samples taken, signed by the testing laboratory employee(s) performing air monitoring, and the worker who took the sample, and CONTRACTOR's outside foreman.

G. CONTRACTOR shall submit copies of all test results to ENGINEER.

H. CONTRACTOR shall submit the following records to ENGINEER:

1. Testing Laboratory: The laboratory selected by CONTRACTOR, if used to analyze air and surface samples for LCP shall meet the requirements of OSHA for Quality Control Procedures. A copy of current results of the quality assurance programs shall be submitted to ENGINEER.

2. Permits: A copy of all Federal, State and local licenses and permits shall be submitted for the LCP removal firm, the supervising foreman, if such licensing is required. CONTRACTOR shall obtain necessary permits in conjunction with the LCP removal work.

3. Reports: Daily filed reports.

4. Logs: Daily worker and visitor logs.

5. Landfill: Written evidence that the designated disposal landfill meets the requirements of 40 CFR 241 and is approved for LCP debris disposal by the EPA, State and local regulatory agencies. Submit detailed delivery tickets, prepared, signed, and dated by an agent of the landfill, certifying the amount of and concentration of leaded materials delivered to the landfill, within three working days after delivery.

6. Hazardous Waste Management Plan: The Hazardous Waste Management Plan.

7. Hazardous Waste Manifest: The Hazardous Waste Manifest.

8. Notifications: CONTRACTOR shall notify the EPA and ENGINEER in writing ten working days prior to the start of LCP removal work.

1.05 SAFETY AND HEALTH COMPLIANCE

A. General: CONTRACTOR shall further comply with all laws, ordinances, rules, and regulations of Federal, State and local authorities regarding handling, storing, transporting, and disposing of lead-containing waste materials. CONTRACTOR shall submit matters requiring interpretation of standards to the appropriate administrative agency for resolution before starting removal work.

B. Medical Surveillance: Provide medical surveillance to all personnel exposed to lead as indicated in 29 CFR 1926.62.

C. Training: Train each employee performing paint removal, disposal, and air sampling operations prior to the time of initial job assignment and annually thereafter, in accordance with 29 CFR 1926.21, and 29 CFR 1926.62.

D. Training Certification: Submit a certificate for each employee, signed and dated by the training source, stating that the employee has received the required lead training per 29 CFR 1926.62

E. Respiratory Protection Program: Furnish each employee required to wear a negative pressure respirator or other appropriate type with a respirator fit test at the time of initial fitting and at least annually thereafter as required by 29 CFR 1926.62. Establish and implement a respiratory protection program as required 29 CFR 1910.134 and 29 CFR 1926.62. Establish and implement a Hazard Communication Program as required by 29 CFR 1926.59.

1.06 HAZARDOUS WASTE MANAGEMENT

A. The Hazardous Waste Management Plan shall comply with applicable requirements of federal, State, and local hazardous waste regulations and address:

1. Identification and classification of hazardous wastes associated with the work.

2. Estimated quantities of wastes to be generated and disposed.

3. Names and qualifications of each contractor that will be transporting, storing, treating, and disposing of the wastes. Include the facility location and operator and a 24-hour point of contact.

4. Names and qualifications (experience and training) of personnel who will be working on-site with hazardous wastes.

5. List of waste handling equipment to be used in performing the work, to include cleaning, volume reduction, and transport equipment.

6. Spill prevention, containment, and cleanup contingency measures including a health and safety plan to be implemented in accordance with 29 CFR1926.65.

7. Work plan and schedule for waste containment, removal and disposal. Wastes shall be cleaned up and containerized daily.

8. Include any process that may alter or treat waste rendering a hazardous waste nonhazardous.

1.07 COMPETENT PERSON RESPONSIBILITIES

A. The following are the responsibilities of the CP:

1. Certify training as meeting all federal, State, and local requirements.

2. Review and approve LCP removal and disposal plan for conformance to applicable referenced standards.

3. Inspect LCP removal work for conformance with the approved plan.

4. Responsible for personnel air sampling.

5. Ensure work is performed in strict accordance with specifications at all times.

6. Control work to prevent exposure to occupants and to the environment at all times.

7. Certify the conditions of the work as called for elsewhere in this specification.

1.08 POLLUTION

A. The generation of lead containing dust or LCP debris outside of the Lead Control Area is prohibited.

PART 2 – PRODUCTS

2.01 BLASTING ABRASIVE MATERIALS

A. General: CONTRACTOR shall use mineral, slag or synthetic type abrasives for blast cleaning of paint. Silica sand shall not be used as an abrasive for blast cleaning. The blasting abrasive shall be of the type and size to establish an angular anchor profile within the guidelines of the Coating Manufacturer's product data sheets

B. Blasting Abrasive Additive: CONTRACTOR shall a blasting abrasive additive such as Blastox, or equal, to the abrasives to condition the waste so that it is considered nonhazardous by EPA standards. The blasting abrasive additive shall be designed to disintegrate into small particles when it hits the surface being sandblasted to provide maximum coverage of the additive to the paint particles.

2.02 EQUIPMENT

A. Respirators: Furnish appropriate respirators approved by the National Institute for Occupational Safety and Health (NIOSH), Department of Health and Human Services, for use in atmospheres containing lead dust. Respirators shall comply with the requirements of 29 CFR 1926.62.

B. Special Protective Clothing: Furnish personnel who will be exposed to lead-contaminated dust with proper disposable (uncontaminated, reusable) protective whole body, head covering, gloves, and foot coverings as required by 29 CFR 1926.62. Furnish proper disposable plastic or rubber gloves to protect hands. Reduce the level of protection only after obtaining approval from the CP.

C. Furnish the ENGINEER with two complete sets of personal protective equipment (PPE) daily, as required herein, for entry into and inspection of the lead removal work within the lead controlled area. Personal protective equipment shall include disposable whole body covering, including appropriate foot, head, eye, and hand protection. PPE shall remain the property of the CONTRACTOR. Any Type "C" respiratory protection necessary for the safe entry into the controlled area for the Site Representative will be provided by the CONTRACTOR while any air purifying respiratory protection used by ENGINEER.

PART 3 – EXECUTION

3.01 CONTAINMENT

A. General: CONTRACTOR shall erect a temporary structure around the work area to contain debris from blast cleaning operations including airborne particulate matter. Containment shall be maintained during painting operation.

B. CONTRACTOR shall test solid waste for hazardous material content. All wastes shall be considered hazardous until sufficient testing indicates that it is nonhazardous. CONTRACTOR shall take all necessary actions to protect his workers from working with and handling wastes that are considered to be hazardous.

C. The containment system shall meet the requirements of Class 2 as specified in the SSPC Guide 6 "Guide for Containing Debris Generated During Paint Removal Operations." Assessment of the containment system will be conducted in accordance with SSPC Guide 6 Section 5.5. CONTRACTOR is responsible for the testing. All workers shall be protected in accordance with the applicable OSHA standards.

D. Loads: The containment system shall be designed and erected so that no damaging loads are imposed by the containment and collection systems on the existing structures and/or piping.

E. Boundary Requirements: Provide physical boundaries around the lead control area and staging area by barricade tape and work compound.

F. Warning Signs: Provide caution signs at boundary and warning signs at approaches to lead control areas. Locate signs at such a distance that personnel may read the sign and take the necessary precautions before entering the area. Signs shall comply with the requirements of 29 CFR 1926.62.

3.02 MONITORING

A. CONTRACTOR shall perform personnel air monitoring during the ongoing paint removal activity to determine the level of airborne lead and the adequacy of the respiratory protection required. Each active worker shall be monitored. The highest reading of any worker shall serve as the basis of respirator protection. CONTRACTOR shall provide ENGINEER with test results within three consecutive days after completion of the weekly testing. Federal, State or local regulations regarding occupational exposure monitoring shall be followed if more stringent than the monitoring required herein. Monitoring shall be determined by CONTRACTOR to be in compliance with federal regulations.

B. CONTRACTOR shall install air monitors to continuously monitor airborne particulate matter for lead. The monitors shall be placed into operation prior to the erection of the containment facilities and remain in service until after the removal of the containment facilities. The number and location of monitors shall be determined by CONTRACTOR to be in compliance with local, state and federal regulations based on his operations.

3.03 SOIL SAMPLING

A. Soil sampling prior to the start of the Work on the site. CONTRACTOR shall test four locations near the filters, as designated by the ENGINEER in the field. Locations of the soil samples shall be staked and surveyed by CONTRACTOR. Sample locations shall be marked with a surveyor stake or pin to locate the sample points after the completion of the Work.

B. After completion of the work, the CONTRACTOR shall test the same seven sample areas as described in above. CONTRACTOR shall collect samples according to the HUD protocol contained in HUD Guidelines to determine the lead content of settled dust in parts per million (ppm) or micrograms per gram (mg/g) for soil. Comparing these soil samples with the ones taken prior to the start of the work will determine if soil lead levels increased at a statistically significant level (significant at the 95 percent confidence limit) from the soil lead levels prior to the lead removal operation. If soil lead levels either show a statistically significant increase above soil lead levels prior to lead removal operations or soil lead levels are above any applicable federal or state standard for lead in soil, the soil shall be remediated by the CONTRACTOR at no cost to the OWNER.

3.04 BLASTING ABRASIVE ADDITIVE

A. CONTRACTOR shall store and blend blasting abrasive additive in accordance with the manufacturer's written instructions.

3.05 DISPOSAL OF WASTE

A. Requirements: Blasting media/waste and residue shall be cleaned from the work area prior to coating activities. CONTRACTOR shall dispose of LCP debris in accordance with applicable Federal, State, and local requirements. CONTRACTOR shall submit written disposal plans to ENGINEER for review not less than seven days prior to bringing any disposal operations involving LCPs. CONTRACTOR shall complete and furnish to ENGINEER a complete written report of all disposal activities, whether hazardous or nonhazardous, within three days after completion of the particular disposal activity or operation.

B. CONTRACTOR shall refer to SSPC Guide 7 "Guide for Disposal of Lead Contaminated Surface Preparation Debris" for disposal.

C. Wastes from different removal methods and from dust collecting equipment shall be kept separate by CONTRACTOR and stored and handled as hazardous waste. All wastes shall be assumed to contain lead and CONTRACTOR shall take all necessary actions to protect his workers from this hazard. All wastes shall be considered hazardous until sufficient testing indicates that it is nonhazardous.

D. Testing for Hazardous Waste: CONTRACTOR shall determine if any of the wastes are hazardous based on the test results for leachable lead by Total Characteristic Leaching Procedures (TCLP) or, based on previous TCLP test results, declare a waste to be hazardous. CONTRACTOR shall take random samples of waste material prior to cleanup for testing purposes. When the results of this testing indicate a concentration of leachable lead to be greater than five parts per million the waste shall be considered hazardous, requiring special disposal.

E. Waste generated may contain lead although the amount of leachable lead shall be below five ppm to consider it a nonhazardous waste.

F. Nonhazardous Waste Disposal: All nonhazardous waste shall be transported to a Class 1 Sanitary Landfill where they shall be disposed. CONTRACTOR shall submit a tracking document indicating where and when the waste was disposed. The transporter and the disposal facility shall sign the document.

G. Hazardous Waste: If any of the wastes are determined to be hazardous wastes, then CONTRACTOR shall obtain an EPA identification number and dispose of the waste in accordance with the following:

1. CONTRACTOR shall complete EPA Form 8700-12 and transmit it to the EPA Region Office where a permanent identification number will be assigned – usually within three to six weeks.

2. All hazardous waste shall be collected and stored in proper DOT approved containers. The waste containers shall meet all DOT requirements for packaging and labeling before transport. The containers must be labeled “Hazardous Waste” and once full, dates of accumulations must be placed on them. Once dated, the waste can be stored on site for a maximum of ninety days before shipment is required. When not in use, all containers must be secured. “Danger: Unauthorized Personnel Keep Out” signs shall be placed around the waste storage area and shall be visible from all directions of approach.

3. Lead-containing waste shall be transported and disposed of in a manner to prevent lead from becoming airborne.

4. An EPA Manifest form shall be obtained prior to transporting the waste. CONTRACTOR shall keep the original copy of the Manifest for at least three years after the issuance of Substantial Completion by OWNER. Copies shall be submitted to ENGINEER.

- END OF SECTION -

SECTION 09900 - PAINTING

PART 1 -- GENERAL

1.01 THE REQUIREMENT

A. The Contractor shall furnish all labor, tools, materials, supervision and equipment necessary to do all the work specified herein and as required for a complete installation, including surface preparation, priming and painting of Contractor furnished equipment, materials, and structures.

1.02 GENERAL INFORMATION AND DESCRIPTION

A. The term "paint," as used herein, includes emulsions, enamels, paints, stains, varnishes, sealers, cement filler, cement-latex filler and other coatings, whether used as prime, intermediate, or finish coats.

B. All paint for concrete and metal surfaces shall be especially adapted for use around water treatment plants and shall be applied in conformance with the manufacturer's published specifications and as identified herein.

C. All paint for final coats shall be fume resistant, compounded with pigments suitable for exposure to gases, especially to hydrogen sulfide and to carbon dioxide. Pigments shall be materials which do not tend to darken, discolor, or fade due to the action of sewage gases. If a paint manufacturer proposes use of paint which is not designated "fume resistant" in its literature, it shall furnish full information concerning the pigments used in this paint.

D. Coatings used in conjunction with potable water supply systems shall have U.S. Environmental Protection Agency (EPA), National Science Foundation (NSF), and Food and Drug Administration (FDA) approval for use with potable water and shall not impart a taste or odor to the water.

E. All building, facilities, structures, and appurtenances, as indicated on the Drawings and as specified herein, shall be painted with not less than one shop coat and two field coats, or one prime coat and two finish coats of the appropriate paint. Items to be painted include, but are not limited to exterior and interior concrete, structural steel, miscellaneous metals, steel and aluminum doors and frames, concrete block, ductwork, sluice gates, operators, pipe fittings, valves, mechanical equipment, motors, conduit, and all other work which is obviously required to be painted unless otherwise specified.

F. Baked-on enamel finishes and items with standard shop finishes such as graphic panels, electrical equipment, toilet partitions, lockers, instrumentation, etc., shall not be field painted unless the finish is damaged during shipment or installation. Aluminum, stainless steel, fiberglass and bronze work shall not be painted unless color coding and marking is required or otherwise specified. A list of surfaces not to be coated is included in Article 1.09 of this Section.

G. The Contractor shall obtain all permits, licenses and inspections and shall comply with all laws, codes, ordinances, rules and regulations promulgated by authorities having jurisdiction which may bear on the work. This compliance will include Federal Public Law 91-596 more commonly known as the "Occupational Safety and Health Act of 1970".

1.03 MANUFACTURERS

A. All painting materials shall be as manufactured by Tnemec, Carboline, Sherwin Williams, or approved equal.

1.04 SUBMITTALS

A. The Contractor shall submit paint manufacturer's data sheets, application instructions, and samples of each finish and color to the Engineer for review, before any work is started in accordance with the Section entitled, "Submittals."

B. Submitted samples of each finish and color shall be prepared in a step-down format so that the area of each sample indicates the appearance of the various coats. For example, where a three-coat system is specified, the sample shall be divided into three areas indicating one coat only, two coats and all three coats. The Engineer will provide written authorization constituting a standard, as to color and finish only, for each coating system.

C. The Contractor shall prepare a complete schedule of surfaces to be coated and shall identify the surface preparation and paint system it proposes to use. The Paint Schedule shall be in conformance with Article 3.03 of this Section. The schedule shall contain the name of the paint manufacturer, and the name, address and telephone number of the manufacturer's representative that will inspect the Work. The schedule shall be submitted to the Engineer for review as soon as possible following the Notice to Proceed so that the schedule may be used to identify colors and to specify shop painting systems on order for fabricated equipment.

D. Name and detailed qualifications of the protective coatings applicator or subcontractor. Qualifications shall include, but not be limited to, five (5) references which show that the painting applicator or subcontractor has previous successful experience with the specified or comparable coating systems, a list of installations that are currently in service and documentation that applicator or subcontractor is currently a qualified applicator or the proposed coatings by the manufacturer.

1.05 SERVICES OF MANUFACTURER'S REPRESENTATIVE

A. The Contractor shall purchase paint from an acceptable manufacturer. The manufacturer shall assign a representative to inspect the application of its product both in the shop and field. The Contractor, through the manufacturer's representative, shall submit its report to the Engineer at the completion of its Work identifying the products used and verifying that said products were properly applied and that the paint systems were proper for the exposure and service.

B. Services shall also include, but not be limited to, inspecting prior coatings of paint, determination of best means of surface preparation, inspection of complete work, and re-inspection of painted work to be performed six months after the job is completed.

1.06 MANUFACTURER'S INSTRUCTIONS

A. The manufacturer's published instructions for use as a guide in specifying and applying the manufacturers proposed paint shall be submitted to the Engineer. Paint shall not be delivered to the job before acceptance of the manufacturer's instructions is given by the Engineer.

B. A manufacturer's paint will not be considered for use unless that manufacturer's published instructions meets the following requirements:

1. The instructions must have been written and published by the manufacturer for the purpose and with the intent of giving complete instruction for the use and application of the proposed paint in the locality and for the conditions for which the paint is specified or shown to be applied under this Contract.

2. All limitations, precautions, and requirements that may adversely affect the paint; that may cause unsatisfactory results after the painting application; or that may cause the paint not to serve the purpose for which it was intended; that is, to protect the covered material from corrosion, shall be clearly and completely stated in the instructions. These limitations and requirements shall, if they exist, include, but not be limited to the following:

a. Methods of application

b. Number of coats

c. Thickness of each coat

d. Total thickness

e. Drying time of each coat, including primer

f. Primer required to be used

g. Primers not permitted

h. Use of a primer

I. Thinner and use of thinner

j. Temperature and relative humidity limitations during application and after application

k. Time allowed between coats

l. Protection from sun

m. Physical properties of paint including solids content and ingredient analysis

n. Surface preparation

o. Touch up requirements and limitations

C. Concrete surfaces specified by the paint manufacturer to be acid etched shall be etched in accordance with the manufacturer's instructions. The surface shall then be thoroughly scrubbed with clean water, rinsed, and allowed to dry. The surface shall be tested with a moisture meter to determine when dry before coating.

1.07 QUALITY ASSURANCE

A. The Contractor shall give the Engineer a minimum of three days advance notice of the start of any field surface preparation work of coating application work.

B. All such Work shall be performed only in the presence of the Engineer, unless the Engineer has specifically allowed the performance of such Work in its absence.

C. Review by the Engineer, or the waiver of review of any particular portion of the work, shall not relieve the Contractor of its responsibility to perform the Work in accordance with these Specifications.

D. The Contractor shall provide five references which show previous successful experience with the specified or comparable coating systems. If the coating is to be performed by a subcontractor, said subcontractor shall provide five references which show previous successful experience with the specified or comparable coating systems. Include the name, address, and the telephone number for the City of each installation for which the Contractor or subcontractor provided the protective coating.

1.08 SAFETY AND HEALTH REQUIREMENTS

A. In accordance with requirements of OSHA Safety and Health Standards for Construction (29CFR1926) and the applicable requirements of regulatory agencies having jurisdiction, as well as manufacturer's printed instructions, appropriate technical bulletins, manuals, and material safety data sheets, the Contractor shall provide and require use of personnel protective and safety equipment for persons working in or about the project site.

B. All paints must comply with the requirements of the National Ambient Air Quality Standards.

1.09 SURFACES NOT TO BE COATED

A. The following items shall not be coated unless otherwise noted:

1. Encased piping or conduit.
2. Stainless steel work.
3. Clear PVC secondary containment piping.
4. Galvanized checkered plate.
5. Aluminum handrails, walkways, windows, louvers, grating and checkered plate.
6. Flexible couplings, lubricated bearing surfaces and insulation.
7. Packing glands and other adjustable parts of mechanical equipment.
8. Finish hardware.
9. Steel encased in concrete or masonry
10. Plastic switch plates and receptacle plates.
11. Signs and nameplates.
12. Any code-required labels, such as Underwriters' Laboratories and Factory Mutual, or any equipment identification, performance rating, name or nomenclature plates.

13. Any moving parts of operating units, mechanical and electrical parts, such as valve and damper operators, linkages, sensing devices, motor and fan shafts, unless otherwise indicated.

1.10 QUALITY WORKMANSHIP

A. The Contractor shall be responsible for the cleanliness of its painting operations and shall use covers and masking tape to protect the work whenever such covering is necessary, or if so requested by the Owner any unwanted paint shall be carefully removed without damage to any finished paint or surface. If damage does occur, the entire surface, adjacent to and including the damaged area, shall be repainted without visible lapmarks and without additional cost to the Owner.

B. The Contractor shall provide covers made of plywood or other acceptable material to protect Filters in operation while painting work is ongoing in off-line filter.

1.11 ADDITIONAL PAINT

A. At the end of the project, the Contractor shall turn over to the Owner a one gallon can (single component material) or small kit (multi component material – minimum of one gallon yield) of each type and color of paint, primer, thinner or other coating used in the field painting. The material shall be delivered in unopened, labeled cans as it comes from the factory. The manufacturer's literature describing the materials and giving directions for their use shall be furnished in three bound copies. A type-written inventory list shall be furnished at the time of delivery.

1.12 SHIPPING, HANDLING AND STORAGE

A. All painting materials shall be brought to the job site in the original sealed labeled containers of the paint manufacturer and shall be subject to review by the Engineer. Where thinning is necessary, only the product of the manufacturer furnishing the paint shall be used. All such thinning shall be done strictly in accordance with the manufacturer's instructions, and with the full knowledge of the Engineer.

B. Materials and their storage shall be in full compliance with the requirements of pertinent codes and fire regulations. Receptacles shall be placed outside buildings for paint gates and containers. Paint waste shall not be disposed of in plumbing fixtures, process drains or other plant systems or process units.

PART 2 -- PRODUCTS

2.01 MATERIALS

A. Table 09900-1 depicts the coatings referenced in Article 3.03 of this Section entitled, "Paint Schedule". Table 09900-1 lists Tnemec products as a reference. Equivalent products by the manufacturers listed in Article 1.03 of this Section may be submitted for review.

TABLE 09900-1

PRODUCT LISTING

Ref. No.	Description	MANUFACTURER'S REFERENCE
		Tnemec
102	Inorganic Water-based Epoxy	1254 Epoxoblock WB
103	Vinyl Acrylic Filler	54 – Masonry Filler
105	Polyamidoamine Epoxy	N69 – Hi Build Epoxoline II
106	Acrylic Emulsion	181 – W.B. Tneme-Crete
110	Acrylic Polyurethane	1074U Endurashield
114	Waterborne Polyamide Epoxy	151 - Elasto-Grip
115	Aromatic Urethane, Zinc Rich	90-97 Tneme Zinc
116	Cementitious Repair Mortar	217 Mortarcrete
117	Modified Polyamine Epoxy	215 Surfacing Epoxy
129	Polyamide Epoxy Coal Tar	46H-413 Hi Build Tneme Tar

2.02 TRAFFIC PAINT

A. Paint for marking the parking lots shall be Sherwin-Williams PRO-MAR traffic marking paint, or equal. Color shall be white. Paint shall be applied in accordance with the manufacturer's recommendations. Striped areas shall be as indicated on the Plans.

PART 3 – EXECUTION

3.01 SURFACE PREPARATION

A. Surfaces to be painted shall be clean and dry, and free of dust, rust, scale and all foreign matter. No solvent cleaning, power or hand tool cleaning shall be permitted unless acceptable to the Engineer or specified herein.

B. Except as otherwise provided, all preparation of metal surfaces shall be in accordance with Specifications SP-1 through SP-10 of the Steel Structures Painting Council (SSPC). Where Steel Structures Painting Specifications are referred to in these Contract Documents, the corresponding Pictorial Surfaces Preparation Standard shall be used to define the minimum final surface conditions to be supplied. Grease and oil shall be removed and the surface prepared by hand tool cleaning, power tool cleaning or blast cleaning in accordance with the appropriate Specification SP-1 through SP-10.

C. Weld flux, weld spatter and excessive rust scale shall be removed by power tool cleaning as per SSPC-SP-3-63.

D. Threaded portions of valve and gate stems, machined surfaces which are limited for sliding contact, surfaces which are to be assembled against gaskets, surfaces or shafting on which sprockets are to fit, or which are intended to fit into bearings, machined surfaces of bronze trim on slide gates and similar surfaces shall be masked off to protect them from

the blast cleaning of adjacent surfaces. Cadmium-plated or galvanized items shall not blast cleaned unless hereinafter specified, except that cadmium-plated, zinc-plated, or sherardized fasteners used in assembly of equipment to the blast cleaned shall be blast cleaned in the same manner as the unprotected metal. All installed equipment, mechanical drives, and adjacent painted equipment shall be protected from blast cleaned. Protection shall prevent any sand or dust from entering the mechanical drive units or equipment where damage could be caused.

E. Hardware accessories, machined surfaces, plates, lighting fixtures and similar items in place prior to cleaning and painting, and not intended to be painted, shall be protected or removed during painting operations and repositioned upon completion of painting operations.

F. Any abraded areas of shop or field applied coating shall be touched up with the same type of shop or field applied coating, even to the extent of applying an entire coating, if necessary. Touch-up coating and surface preparations shall be in addition to and not considered as the first field coat.

G. Sand from sandblasting shall be thoroughly removed, using a vacuum cleaner if necessary. No surface which has been sandblasted shall be painted until inspected by the Engineer.

H. Exposed Pipe

1. Bituminous coated pipe shall not be used in exposed locations. Pipe which shall be exposed after project completion shall be primed in accordance with the requirements herein. Any bituminous coated ferrous pipe which is inadvertently installed in exposed locations shall be blast cleaned to SSPC-SP-5 White Metal before priming and painting.

2. After installation and prior to finish painting, all exterior, exposed flanged joints shall have the gap between adjoining flanges and gaps between the pipe wall and threaded-on flanges sealed with a single component Thiokol caulking to prevent rust stains.

I. Ferrous Metal Surfaces

1. All ferrous metal surfaces not required to be galvanized shall be cleaned of all oil grease, dirt, rust and tight and loose mill scale by blasting in accordance with the following: SSPC-SP-5, White Metal Blast Cleaning and comply with the visual standard NACE 1, for shop prepared and shop primed metal to be submerged. SSPC-SP-10 Near White Metal Blast Cleaning, and comply with the visual standard NACE 2 for field prepared metal to be submerged, SSPC-SP6 and comply with the visual standard NACE 3, for field prepared metal in all other locations. Pickling, complying with SSPC-SP-8, may be substituted for Near White Blast in areas as determined by the Engineer. Priming shall follow blast cleaning before any evidence of corrosion occurs, before nightfall and before any moisture is on the surface.

J. Field surface preparation of small, isolated areas such as field welds, repair of scratches, abrasions or other marks to the shop prime or finish shall be cleaned by power tools in

accordance with SSPC-SP-3, or in difficult and otherwise inaccessible areas by hand cleaning in accordance with SSPC-SP-2 and spot primed.

K. Primed or Coated Surfaces and Non-Ferrous Surfaces

1. All coated surfaces shall be cleaned prior to application of successive coats. All non-ferrous metals not to be coated shall be cleaned. This cleaning shall be done in accordance with SSPC-SP-1, Solvent Cleaning.

L. Shop Finished Surfaces

1. All shop-coated surfaces shall be protected from damage and corrosion before and after installation by treating damaged areas immediately upon detection. Abraded or corroded spots on shop-coated surfaces shall be prepared in accordance with SSPC-SP-2, Hand Tool Cleaning and then touched up with the same materials as the shop coat.

2. All shop coated surfaces which are faded, discolored, or which require more than minor touch-up, in the opinion of the Engineer, shall be repainted. Cut edges of galvanized sheets, electrical conduit, and metal pipe sleeves, not to be finish painted, shall be cleaned in accordance with SSPC-SP-1, Solvent Cleaning and primed with zinc dust-zinc oxide metal primer.

M. Galvanized and Copper Alloy Surfaces

1. All copper or galvanized metal surfaces shall be brush blasted and given one coat of epoxy primer.

N. Concrete and Masonry Surfaces

1. Concrete and masonry surfaces to be painted shall be prepared by removing efflorescence, chalk, dust, dirt, grease, oil, form coating, tar and by roughening to remove glaze. All surfaces shall be repaired prior to commencement of the coating operation.

2. Concrete and masonry surfaces are to be cured for at least 28 days prior to coating them.

O. New concrete immersion surfaces that are to be coated shall be brush blasted per SSPC-SP13 to produce the necessary "sandpaper texture" surface required for satisfactory adherence of the paint. Refer to manufacturer’s recommendation for specific coating being applied and adhere to ICRI Concrete Surface Preparation Profiles (CSP 1-9) when reviewing concrete surface preparation. Areas of concrete which contain bug holes or voids shall be filled with the manufacturer's approved filler material.

P. Existing Painted Concrete and Masonry Surfaces

1. Existing painted concrete and masonry surfaces requiring paint as identified herein shall be prepared by applying a minimum 3500 psi high pressure water blast to the existing painted surface to remove all loose paint, chalk, dust, dirt, grease, oil, latents, and other foreign materials. Cracks, chips or voids in the existing concrete shall be repaired in accordance with paint manufacturer recommendations.

Q. PVC Pipe Surfaces

1. All pipe surfaces shall be lightly sanded before painting.

3.02 SHOP PAINTING

A. All fabricated steel work and equipment shall receive at the factory at least one shop coat of prime paint compatible with the paint system required by these Specifications. The Contractor shall coordinate all shop priming to ensure compatibility with paint system specified. Surface preparation prior to shop painting shall be as specified. Finish coats may be applied in the shop if acceptable to the Engineer. All shop painted items shall be properly packaged and stored until they are incorporated in the Work. Any painted surfaces that are damaged during handling, transporting, storage or installation shall be cleaned, scraped, and patched before field painting begins so that Work shall be equal to the original painting received at the shop. Equipment or steel Work that is to be assembled on the site shall likewise receive a minimum of one shop coat of paint at the factory. Surfaces of exposed members that will be inaccessible after erection shall be prepared and painted before erection.

B. The Contractor shall specify the shop paints to be applied when ordering equipment in order to assure compatibility of shop paints with field paints. The paints and surface preparation used for shop coating shall be identified on shop drawings submitted to the Engineer for review. Shop paint shop drawings will not be reviewed until the final project paint system has been submitted by the Contractor and reviewed by the Engineer.

C. Shop finish coats may be the standard finish as ordinarily applied by the manufacturer if it can be demonstrated to the Engineer that the paint system is equal to and compatible with the paint system specified. However, all pumps, motors and other equipment shall receive at least one field applied finish coat after installation.

3.03 PAINT SCHEDULE

A. The Contractor shall adhere to this paint schedule, providing those paints named or equal. DFT shall mean the minimum dry film thickness per application measured in mils. Products are referenced by numbers listed in Table 09900-1 of this Section entitled "Product Listing." The paint schedule identifies the minimum DFT required per coat. If the Contractor does not achieve the specified DFT range in a single coat, it shall provide additional coats as necessary at no additional cost to the Owner.

B. Metal Surfaces, Atmospheric (Exterior) Exposure

1. Existing and proposed Metal surfaces exposed to the atmosphere, and that do not come into contact with wastewater or corrosive atmosphere, including the following types of surfaces shall be painted as described below:

a. Pumps, motors, process equipment, machinery, etc.

b. Above ground piping, valves, and pipe supports

c. Miscellaneous steel shapes, angles, etc.

d. Exposed non-factory painted surfaces of electric panels, conduit, ventilation fans, air conditioning units, duct work, etc.

e. Piping and valves (excluding ductile iron) inside below valve vaults.

2. Surface Preparation: Blast clean in accordance with SSPC-SP6

3. Coating System

Application	No.	Description	DFT
First -1 coat	115	Aromatic Urethane Zinc Rich	2.0 - 4.0
Second – 1 coat	105	Polyamidoamine Epoxy	4.0 - 6.0
Finish - 1 coat	110	Acrylic Polyurethane	2.0 - 3.0
		Min. Total	10.0 Mils

C. Metal Surfaces, Interior Exposure

1. Existing and proposed interior metal surfaces (non-submerged) that do not come in contact with water or the corrosive atmosphere including the following types of surfaces shall be painted as follows:

a. Pumps, motors, process equipment, machinery, etc.

b. Piping and valves (excluding ductile iron)

c. Miscellaneous steel shapes, angles, rails, etc.

d. Exposed surfaces of conduit, ductwork, etc.

2. Surface Preparation: Blast clean in accordance with SSPC-SP6

3. Coating System

Application	No.	Description	DFT
First - 1 coat	115	Aromatic Urethane Zinc Rich	2.0 - 4.0
Second - 1 coat	105	Polyamidoamine Epoxy	4.0 - 6.0
Finish – 1 coat	110	Acrylic Polyurethane	2.0 - 3.0
		Min. Total	10.0 Mils

D. Ductile Iron Pipe, Exterior or Interior Exposure

1. Ductile iron pipe exterior or interior exposure shall receive the following types of paint:

2. Surface Preparation: Blast clean in accordance with SSPC-SP6

3. Coating System

Application	No.	Description	DFT
Prime – 1 coat	115	Aromatic Urethane Zinc Rich	2.0 - 4.0
Second - 1 coat	105	Polyamidoamine Epoxy	4.0 - 6.0

Finish – 1 coat	110	Acrylic Polyurethane	2.0 - 3.0
		Min. Total	10.0 Mils

E. PVC Pipes, Exterior or Interior Exposure

1. PVC pipes, valves, and accessories, shall receive the following types of paint:

2. Surface Preparation: Light sanding

3. Coating System

Application	No.	Description	DFT
First - 1 coat	105	Polyamidoamine Epoxy	2.0 - 3.0
Finish - 1 coat	110	Acrylic Polyurethane	2.0 - 3.0
		Min. Total	4.0 Mils

F. Concrete Surfaces, Buried Exposure

1. The cast-in-place concrete walls and pre-cast concrete structures including the exterior of new manholes, below grade clearwell, the interior and exterior electrical pull boxes and footings of structures, shall be painted as follows. (Exterior surfaces shall be coated from the footing up to six inches below finished grade):

Application	No.	Description	DFT
First – 1 coat	129	Polyamide Epoxy-Coal Tar	14.0
		Min. Total	14.0 Mils

G. Concrete and Masonry Walls, Existing Painted Exterior

1. Exterior of existing walls shall be painted as described below:

Surface Preparation: Remove unsound paint, excess mortar, laitance, and efflorescence. Pressure wash with TSP/Chlorine solution and fresh water rinse.

Application	No.	Description	DFT
Surfacer (*)	116	Cementitious Repair Mortar	As req'd
Surfacer (**)	117	Modified Polyamine Epoxy	As req'd
First - 1 coat	114	Waterborne Polyamide Epoxy	1.0 - 2.0
Finish - 1 coat	106	Acrylic Emulsion	7.0 - 9.0
		Min. Total	10.0 Mils

(*) Surfacer to be applied to fill voids >1/4-inch deep

(**) Surfacer to be applied to fill voids < ¼-inch deep

H. Concrete and Masonry Walls, Existing Painted Interior

1. Interior existing masonry and concrete walls shall be painted as described below:

Surface Preparation: Remove unsound paint, excess mortar, laitance, and efflorescence. Pressure wash with TSP/Chlorine solution and fresh water rinse.

Application	No.	Description	DFT
First - 1 coat	105	Hi-Build Epoxoline II	4.0 – 6.0
Finish - 1 coat	105	Hi-Build Epoxoline II	4.0 – 6.0
		Min. Total	10.0 Mils

J. New Concrete, Stucco and Masonry Surfaces, Exterior exposure of non-water bearing structures

1. The exterior above grade surfaces of all new non-water bearing structures and new surfaces at existing non water bearing structure shall receive the following:

Surface Preparation: Surface shall be clean and dry. Allow concrete to cure for 28 days.

Application	No.	Description	DFT
Block Filler (*)	103	Water Based Epoxy	80 - 100 SF/Gal
First - 1 coat	106	Acrylic Emulsion	4.0 – 6.0
Finish - 1 coat	106	Acrylic Emulsion	4.0 – 6.0
		Min. Total	10.0 Mils

(*) Block filler only to be used on new masonry CMU / formed concrete.

K. New Concrete and Masonry Surfaces, Interior Exposure

1. Interior exposed masonry and concrete surfaces of all new non-water retaining structures shall be painted as described below:

Surface Preparation: Surface shall be clean and dry. Allow concrete to cure for 28 days.

Application	No.	Description	DFT
Block Filler (*)	102	Water Based Epoxy	100 -150 SF/Gal
First - 1 coat	105	Hi-Build Epoxoline II	4.0 - 6.0
Finish - 1 coat	105	Hi-Build Epoxoline II	4.0 - 6.0
		Min. Total	10.0 Mils

(*) Block filler only to be used on new masonry CMU and formed concrete.

3.04 PAINTING

A. All paint shall be applied by experienced painters with brushes or other applicators acceptable to the Engineer.

B. Paint shall be applied without runs, sags, thin spots, or unacceptable marks. Paints shall be applied at the rate specified by the manufacturer to achieve the minimum dry mil thickness required. Additional coats of paint shall be applied, if necessary, to obtain thickness specified.

C. Paint shall be applied with spraying equipment only on those surfaces approved by the Engineer. If the material has thickened or must be diluted for application by spray gun, each coat shall be built up to the same film thickness achieved with undiluted brushed-on material. Where thinning is necessary, only the products of the particular manufacturer furnishing the paint shall be used; and all such thinning shall be done in strict accordance with the manufacturer's instructions, as well as with the full knowledge of the Engineer.

D. Surfaces not accessible to brushes or rollers may be painted by spray by dauber or sheepskins and paint mitt. If any of these methods is to be used, it shall be done in strict accordance with the manufacturer's instructions, as well as with the full knowledge of the Engineer.

E. Drying Time

1. A minimum of twenty-four hours drying time shall elapse between applications of any two coats of paint on a particular surface unless shorter time periods are a requirement of the manufacturer or specified herein. Longer drying times shall be required for abnormal conditions as defined by the manufacturer.

F. Weather Restrictions

1. No painting whatsoever shall be accomplished in rainy or excessively damp weather when the relative humidity exceeds 85 percent, or when the general air temperature cannot be maintained at 50 degrees Fahrenheit or above throughout the entire drying period. No paint shall be applied when it is expected that the relative humidity will exceed 85 percent or that the air temperature will drop below 50 degrees Fahrenheit within 18 hours after the application of the paint.

2. Dew or moisture condensation should be anticipated; and if such conditions are prevalent, painting shall be delayed until midmorning to be certain the surfaces are dry. The day's painting shall be completed well in advance of the probable time-of-day when condensation will occur.

G. Inspection of Surfaces

1. Each and every field coat of priming and finishing paint shall be inspected by the Engineer or its authorized representative before the succeeding coat is applied. The Contractor shall follow a system of tinting successive paint coats so that no two coats for a given surface are exactly the same color. Areas to receive black protective coatings shall in such cases be tick marked with white or actually gauged as to thickness when finished.

H. Before application of the prime coat and each succeeding coat, any defects or deficiencies in the prime coat or succeeding coat shall be corrected by the Contractor before application of any subsequent coating.

I. Samples of surface preparation and of painting systems shall be furnished by the Contractor to be used as a standard throughout the job, unless omitted by the Engineer.

J. When any appreciable time has elapsed between coatings, previously coated areas shall be carefully inspected by the Engineer, and where, in its opinion, surfaces are damaged or contaminated, they shall be cleaned and recoated at the Contractor's expense. Recoating times of manufacturer's printed instructions shall be adhered to.

K. Coating thickness shall be determined by the use of a properly calibrated "Nordson-Mikrotest" (or equal) dry mil thickness gauge.

L. The Contractor shall provide free of charge to the Engineer two new "Nordson-Mikrotest" dry film gauges to be used to inspect coating by Engineer and Contractor. One gauge may be used by Contractor and returned each day to the Engineer. Engineer will return gauges to Contractor at completion of job.

M. Special Areas

1. All surfaces which are to be installed against concrete, masonry etc., and will not be accessible for field priming and/or painting shall be back primed and painted as specified herein, before erection. Anchor bolts shall be painted before the erection of equipment and then the accessible surfaces repainted when the equipment is painted.

N. Special attention shall be given to insure that edges, corners, crevices, welds and rivets receive a film thickness equivalent to that of the adjacent painted surfaces.

O. Safety

1. Respirators shall be worn by persons engaged or assisting in spray painting. The Contractor shall provide ventilating equipment and all necessary safety equipment for the protection of the workmen and the Work.

P. Quality Workmanship

1. The Contractor shall be responsible for the cleanliness of its painting operations and shall use covers and masking tape to protect the Work whenever such covering is necessary, or if so requested by the Owner. Any unwanted paint shall be carefully removed without damage to any finished paint or surface. If damage does occur, the entire surface, adjacent to and including the damaged area, shall be repainted without visible lapmarks and without additional cost to the Owner.

Q. Painting found defective shall be scraped or blast cleaned off and repainted as the Engineer may direct. Before final acceptance of the Work, damaged surfaces of paint shall be cleaned and repainted as directed by the Engineer.

R. Any pipe scheduled to be painted and having received a coating of a tar or asphalt compound shall be painted with two coats or "Intertol Tar Stop", "Tnemec Tar Bar" or equal before successive coats are applied in accordance with the paint schedule.

3.05 SCHEDULE OF COLORS

A. All colors shall be as designated by the Engineer at the shop drawing review. The Contractor shall submit color samples including custom color choices as required to the Engineer as specified in Article 1.04 of this Section. The Contractor shall submit suitable samples of all colors and finishes for the surfaces to be painted, or on portable surfaces when required by the Engineer. The Engineer shall decide upon the choice of colors and other finishes when alternates exist. No variation shall be made in colors without the acceptance from the Owner. Color names and/or numbers shall be identified according to the appropriate color chart issued by the manufacturer of the particular product in question.

3.06 ANSI AND OSHA SAFETY COLORS

A. Items specified in the following subsections shall be safety color coated as specified. ANSI colors shall conform to (OSHA) ANSI Z53.1 and latest revisions. Materials shall be compatible with the system specified for the equipment, concrete, etc. Where a coating system is not specified and safety colors are required, the items shall be coated with a primer and two coats Glid-Guard Alkyd Industrial Enamel, or equal.

B. Red: Items listed in ANSI Z53.1, Section 2.1 shall be painted ANSI Red. In general, these items shall include fire protection equipment and apparatus; wall mounted breathing apparatus, danger signs and locations; and stop bars, buttons or switches. In addition, all hose valves and riser pipes, fire protection piping and sprinkler systems, and electrical stop switches shall be painted ANSI Red.

C. Orange: Items listed in ANSI Z53.1, Section 2.2 shall be painted ANSI Orange. ANSI Orange shall be used as a basic color for designating dangerous parts of machines or energized equipment which may cut, crush, shock, or otherwise injure and to emphasize such hazards when enclosure doors are open or when gear belt or other guards around moving equipment are open or removed, exposing unguarded hazards. In addition, moving machinery having a linear or peripheral speed in excess of 10 feet per minute, which is either inadequately guarded due to physical problems or may be operated with the guard removed, rims or sprockets, gears, pulleys, etc.; crossheads of large engines and compressors; and flywheels shall be coated ANSI Orange.

D. Yellow: Items listed in ANSI Z53.1, Section 2.3 shall be painted ANSI Yellow. Yellow shall be the basic color for designating caution and for marking physical hazards such as striking against, stumbling, falling, tripping, and "caught in between". In addition, an 8-inch wide strip on the top and bottom tread of stairways shall be coated.

E. Green: Items listed in ANSI Z53.1, Section 2.4 shall be painted ANSI Green. Green shall be the basic color for designating safety and the location of first-aid equipment. In general, gas masks, first-aid kits, eye wash facilities, and safety deluge showers shall be coated with ANSI Green.

F. Blue: Blue shall be used for designating caution, limited to warning against the starting, the use of, or the movement of equipment under repair or being worked upon.

G. Purple: Items listed in ANSI Z53.1, Section 2.5 shall be painted ANSI Purple. In general, atomic sludge density meters shall be coated ANSI Purple.

3.07 WORK IN CONFINED SPACES

A. The Contractor shall provide and maintain safe working conditions for all employees. Fresh air shall be supplied continuously to confined spaces through the combined use of existing openings, forced-draft fans, or by direct air supply to individual workers. Paint fumes shall be exhausted to the outside from the lowest level in the contained space.

B. Electrical fan motors shall be explosion proof if in contact with fumes. No smoking or open fires will be permitted in, or near, confined spaces where painting is being done.

3.08 CLEANING

A. The buildings and all other Work area shall be at all times kept free from accumulation of waste material and rubbish caused by the Work. At the completion of the painting, all tools, equipment, scaffolding, surplus materials, and all rubbish around the inside the buildings shall be removed and the Work left broom clean unless otherwise specified.

- END OF SECTION –

SECTION 10200 - ALUMINUM LOUVERS

PART 1 -- GENERAL

1.01 THE REQUIREMENT

A. The Contractor shall furnish and install aluminum louvers, as shown on the Drawings and specified herein, required for a complete installation. Louvers shall conform to the requirements on the Louver Schedules shown on the Drawings and the Specifications.

1.02 RELATED WORK SPECIFIED ELSEWHERE

A. Section 05010 – Metal Materials

B. Section 07900 – Joint Fillers, Sealants and Caulking

C. Section 09900 – Painting

1.03 MANUFACTURERS

A. The following lists of companies manufacture products that are acceptable for this Section, subject to conformance with the specified requirements: Ruskin; Greenheck; or approved equal.

1.04 REFERENCE CODES, SPECIFICATIONS, AND STANDARDS

A. Without limiting the generality of these Specifications, work shall conform to the applicable requirements of the following documents. All referenced Specifications, codes, and standards refer to the most current issue available at the time of the Bid.

1. All work shall comply with the Florida Building Code and the requirements of all other authorities having jurisdiction.
2. All units shall conform to AA-Aluminum Standards and Data, latest edition.
3. Louvers shall bear the AMCA Seal with ratings in accordance with AMCA Standard 500 which applies to air performance ratings and water penetration ratings, AMCA 540 and AMCA 550.
4. All louvers, fasteners and supports shall be designed to meet a wind loading in accordance with the Florida Building Code as indicated on the drawings.

1.05 SUBMITTALS

A. The Contractor shall submit shop drawings and other information to the Engineer for review in accordance with Section 01300 entitled "Submittals". Shop drawings shall indicate location, materials finishes, size, accessories, color charts, appurtenances, and details of construction and installation of louvers.

B. Submit one representative sample of each type louver proposed showing construction, finish, and all accessories and appurtenances. Resubmit until acceptable. Upon their acceptance, they will become the standard for the project with regard to construction and finish for each item.

C. Submit Air Movement and Control Association, Inc. (AMCA) licensed test data.

D. Submit Florida Department of Business and Professional Regulation Product Approvals for High Velocity Hurricane Zone in Broward County, Florida.

E. The Engineer will review and return the submittals to the Contractor. The Contractor shall then submit the accepted package to the Building Department having jurisdiction over the work for approval. No fabrication or installation shall begin until the Building Department approval is obtained by the Contractor. The Owner will not assume responsibility for any cost or schedule impacts due to the approval process of the Building Department. It is the Contractor's responsibility to customize the submittals based on the Building Department's published submittal processes.

1.06 QUALITY ASSURANCE

A. All louver components will be inspected by the Engineer before installation. All components which are abraded, dented, bent, bowed or show other structural damage or distortion will be rejected and marked and shall be removed from the site. No component will be allowed to be straightened and then incorporated in the work.

B. Louvers shall bear the AMCA Label as indicated, or when the specified Model or Type bears such a label.

C. Louvers shall be designed for a minimum wind pressure indicated on the Louver Schedules shown on the Drawings, in accordance with the Florida Building Code.

1.07 SHIPPING, HANDLING AND STORAGE

A. Handle materials to avoid injury to persons and to avoid damage to materials or to work in place. Protect while storing during installation and until work is completed. Cover exposed surfaces of metal to prevent damage to finish.

PART 2 -- PRODUCTS

2.01 FIXED LOUVERS

A. Fixed louvers shall be the wind-driven rain resistant stationary type, conforming to the design and construction of Type EHH-601D as manufactured by Greenheck, EME520MD as manufactured by Ruskin, or approved equal. The entire assembly including supports and connections shall be designed and installed to resist a minimum pressure as shown on the drawings and in accordance with the Product Approvals.

B. Louver frames shall be constructed of 0.081-inch thick minimum extruded 6063T6 aluminum. Blades shall be constructed of 0.081-in thick minimum extruded 6063 T6 aluminum. Frames shall be factory assembled completely by the manufacturer by welding. Louvers too large to ship shall be assembled by the Contractor as per the manufacturer's recommendations.

C. Louvers shall bear AMCA Certified Rating Seals for air performance, water penetration, wind driven rain, and impact resistance. Data shall show that a 4 ft x 4 ft louver has water penetration of zero when tested for 15 minutes at less than 1250 FPM free area velocity per AMCA Standard 500-L, provides a minimum of 43% of free area and shall pass 800 FPM free air velocity at a pressure drop not exceeding 0.10 inches water gauge. Data shall also show that the louver has a wind-driven rain penetration class of "A" when tested at 50 MPH wind with 8 inches per hour rainfall.

D. Louvers shall meet the wind driven rain penetration requirements of AMCA 550.

2.02 MULLIONS

A. Mullions shall be continuous line (CONCEALED) type employing an extruded concealed blade brace of the same material and thickness of the louvers.

2.03 FINISH

A. All material shall be factory finished after assembly with Kynar 500 finish. Coatings shall be factory applied. Color shall be as selected by Engineer from the manufacturer's list of colors during shop drawing review. The manufacturer shall provide a minimum twenty year warranty on applied finish

2.04 SCREENS

A. Unless otherwise noted on the Drawings, each louver shall be provided with ½-inch mesh, 14 gauge aluminum wire bird screen secured within a replaceable frame attached to interior face of louver. At non-ducted louvers, provide a fiberglass insect screen in same frame, in contact with and supported by the bird screen. Where non-ducted louvers have window fans, place the bird screen on proper side to support insect screen against air flow caused by the fan.

B. Screen shall have a minimum free area of 80% of gross area.

PART 3 -- EXECUTION

3.01 INSPECTION

A. Examine areas and conditions under which louvers are to be installed. Do not proceed with work until unsatisfactory conditions have been corrected.

3.02 INSTALLATION

A. General: All louvers shall be installed as shown on the shop drawings in accordance with manufacturer's recommendations and in accordance with recognized industry practices to insure that products serve intended functions. Fasteners shall be stainless steel.

B. Coordinate with other work, including ductwork and duct accessories, as necessary to interface installation of air outlets and inlets with other work.

C. The Contractor shall field verify opening dimensions to ensure that fabrication meets installation requirements.

3.03 CLEANING

A. Upon completion of the louver installation, all louvers shall be cleaned of foreign material to the satisfaction of the Engineer.

- END OF SECTION -

SECTION 11000 - EQUIPMENT GENERAL PROVISIONS

PART 1 -- GENERAL

1.01 THE REQUIREMENT

A. The Contractor shall furnish, install, test, and place in acceptable operation all mechanical equipment and all necessary accessories as specified herein, as shown on the Drawings, and as required for a complete and operable system.

B. The mechanical equipment shall be provided complete with all accessories, special tools, spare parts, mountings, and other appurtenances as specified, and as may be required for a complete and operating installation.

C. It is the intent of these Specifications that the Contractor shall provide the Owner complete and operational equipment/systems. To this end, it is the responsibility of the Contractor to coordinate all interfaces with related mechanical, structural, electrical, instrumentation and control work and to provide necessary ancillary items such as controls, wiring, etc., to make each piece of equipment operational as intended by the Specifications.

D. The complete installation shall be free from excessive vibration, cavitation, noise, and oil or water leaks.

E. The requirements of this section shall apply to equipment furnished under Divisions 11, 13, 14, and 15.

1.02 REFERENCE SPECIFICATIONS, CODES, AND STANDARDS

A. All equipment, materials, and installations shall conform to the requirements of the most recent editions with latest revisions, supplements, and amendments of the specifications, codes, and standards listed in Section 01090, Reference Standards.

1.03 PERFORMANCE AFFIDAVITS

A. When required in the individual equipment Specifications, the Contractor shall submit manufacturer's Performance Affidavits for equipment to be furnished.

B. By these affidavits, each manufacturer must certify to the Contractor and the Owner, jointly, that he has examined the Contract Documents and that the equipment, apparatus, or process he offers to furnish will meet in every way the performance requirements set forth or implied in the Contract Documents.

C. The Contractor must transmit to the Engineer three (3) original copies of the affidavit given him by the manufacturer or supplier along with the initial Shop Drawing submittals.

D. The Performance Affidavit must be signed by an officer of the basic corporation, partnership, or company manufacturing the equipment and witnessed by a notary public.

E. The Performance Affidavit shall have the following format:

Addressed to:	(CONTRACTOR) and City of Hallandale Beach
Reference:	City of Hallandale Beach Membrane Water Treatment Plant Bid Package 2 – Reverse Osmosis Addition
Text:	(Manufacturer's Name) has examined the Contract Documents and hereby state that the (Product) meets in every way the performance requirements set forth or implied in Section _____ of the Contract Documents.
Signature:	Corporate Officers shall be Vice President, or higher. (Unless statement authorizing signature is attached.)

1.04 SHOP DRAWINGS

A. Shop Drawings shall be submitted to the Engineer for all equipment in accordance with Section 01300, Submittals and shall include the following information in addition to the requirements of Section 01300, Submittals:

1. Performance characteristics and descriptive data.

2. Detailed equipment dimensional drawings and setting plans.

3. General lifting, erection, installation, and adjustment instructions, and recommendations.

4. Complete information regarding location, type, size, and length of all field welds in accordance with "Standard Welding Symbols" AWS A2.0 of the American Welding Society. Special conditions shall be fully explained by notes and details.

5. The total uncrated weight of the equipment plus the approximate weight of shipped materials. Support locations and loads that will be transmitted to bases and foundations. Exact size, placement, and embedment requirements of all anchor bolts.

6. Details on materials of construction of all components including applicable ASTM designations.

7. Information on bearing types and bearing life.

8. Gear box design and performance criteria and AGMA service factor.

9. Piping schematics.

10. Motor data sheet indicating motor horsepower; enclosure type; voltage; insulation class; temperature rise and results of dielectric tests; service-rating; rotative speed; motor speed-torque relationship; efficiency and power factor at ½, ¾, and full load;

slip at full load; running, full load, and locked rotor current values; and safe running time-current curves.

11. Equipment and motor protective device details. Connection diagrams for motor and all protective devices.

12. Equipment shop coating systems, interior and exterior.

13. Panel layout drawings, schematic wiring diagrams, and component product data sheets for control panels.

14. A list of spare parts and special tools to be provided.

15. Any additional information required to show conformance with the equipment specifications.

16. Warranty documentation including statement of duration of warranty period and contact phone numbers and addresses for warranty issues.

B. SHOP DRAWINGS ON ITEMS REQUIRING PERFORMANCE AFFIDAVITS WILL NOT BE REVIEWED UNTIL ACCEPTABLE PERFORMANCE AFFIDAVITS ARE RECEIVED.

1.05 OPERATION AND MAINTENANCE INSTRUCTION/MANUALS

A. Operation and Maintenance (O&M) manuals shall be submitted in accordance with Section 01300, Submittals.

B. O&M manuals shall include instructions, equipment ratings, technical bulletins, and any other printed matter such as wiring diagrams and schematics, prints or drawings, containing full information required for the proper operation, maintenance, and repair of the equipment. Included in this submission shall be a spare parts diagram, complete spare parts list, bill of materials, OEM part numbers and manufacturer's catalog information of all equipment components.

C. Each set of instructions shall be bound together in appropriate three-ring binders with a detailed Table of Contents.

D. Written operation and maintenance instructions shall be required for all equipment items supplied for this project. The amount of detail shall be commensurate with the complexity of the equipment item.

E. Information not applicable to the specific piece of equipment installed on this project shall be struck from the submission.

F. Information provided shall include a source of replacement parts and names of service representatives, including address and telephone number.

G. Extensive pictorial cuts of equipment are required for operator reference in servicing.

H. When written instructions include Shop Drawings and other information previously reviewed by the Engineer, only those editions thereof which were approved by the Engineer, and which accurately depict the equipment installed, shall be incorporated in the instructions.

1.06 GENERAL INFORMATION AND DESCRIPTION

A. All parts of the equipment furnished shall, be designed and constructed for the maximum stresses occurring during fabrication, transportation, installation, testing, and all conditions of operation. All materials shall be new, and both workmanship and materials shall be entirely suitable for the service to which the units are to be subjected and shall conform to all applicable sections of these Specifications.

B. All parts of duplicate equipment shall be interchangeable without modification. Manufacturer's design shall accommodate all the requirements of these Specifications.

C. Equipment and appurtenances shall be designed in conformity with ASTM, ASME, AIEE, NEMA, and other generally accepted applicable standards.

D. All bearings and moving parts shall be adequately protected by bushings or other approved means against wear, and provision shall be made for accessible lubrication by extending lubrication lines and fittings to approximately 30 inches above finished floor elevation.

E. Details shall be designed for appearance as well as utility. Protruding members, joints, corners, gear covers, etc., shall be finished in appearance. All exposed welds on machinery shall be ground smooth and the corners of structural shapes shall be rounded or chamfered.

F. Machinery parts shall conform within allowable tolerances to the dimensions shown on the working drawings.

G. All machinery and equipment shall be safeguarded in accordance with the safety codes of the USA and the State in which the project is located.

H. All rotating shafts, couplings, or other moving pieces of equipment shall be provided with suitable protective guards of sheet metal or wire mesh, neatly and rigidly supported. Guards shall be removable as required to provide access for repairs.

I. All equipment greater than 100 pounds shall have lifting lugs, eyebolts, etc., for ease of lifting, without damage or undue stress exerted on its components.

J. All manufactured items provided under this Section shall be new, of current manufacture, and shall be the products of reputable manufacturers specializing in the manufacture of such products. .

1.07 EQUIPMENT WARRANTIES

A. Warranty requirements may be added to or modified in the individual equipment specifications.

B. The equipment furnished under this Contract shall be guaranteed to be free from defects in workmanship, design and/or materials for a period of one (1) year unless otherwise specified in the individual equipment specifications. The period of such warranties shall start on the date the particular equipment is placed in use by the Owner with corresponding start-up certification provided by the manufacturer's technical representative as specified herein, provided that the equipment demonstrates satisfactory performance during the thirty day operational period after the equipment startup. If the equipment does not perform satisfactorily during the thirty day operational period, the start of the warranty period will be delayed until the equipment demonstrates proper operation. The Equipment Supplier shall repair or replace without charge to the Owner any part of equipment which is defective or showing undue wear within the guarantee period, or replace the equipment with new equipment if the mechanical performance is unsatisfactory; furnishing all parts, materials, labor, etc., necessary to return the equipment to its specified performance level.

C. The Contractor shall provide an equipment warranty log book prepared specifically for this project and submit two (2) copies of the document to the Engineer prior to final payment. The equipment warranty log book shall include a summary listing of all equipment warranties provided, date received, and start date and end date of warranty period. A copy of each equipment warranty and equipment start-up certification shall also be provided in the document.

D. The Equipment Supplier shall guarantee to the Owner that all equipment offered under these specifications, or that any process resulting from the use of such equipment in the manner stated is not the subject of patent litigation, and that he has not knowingly offered equipment, the installation or use of which is likely to result in a patent controversy, in which the Owner as user is likely to be made the defendant.

Where patent infringements are likely to occur, each Equipment Supplier shall submit, as a part of his bid, license arrangements between himself, or the manufacturer of the equipment offered, and the patent owner or the controller of the patent, which will permit the use in the specified manner of such mechanical equipment as he may be bidding.

Each Equipment Supplier, by submitting his bid, agrees to hold and save the Owner and Engineer or its officers, agents, servants, and employees harmless from liability of any nature or kind, including cost and expenses for, or on account of, any patented or unpatented invention, process, article, or appliance manufactured or used in the performance of the work under this contract, including the use of the same by the Owner.

PART 2 -- PRODUCTS

2.01 ACCEPTABLE MANUFACTURERS

A. The materials covered by these Specifications are intended to be equipment of proven reliability, and as manufactured by reputable manufacturers having experience in the production of such equipment. The Contractor shall, upon request of the Engineer, furnish the names of not less than 5 successful installations of the manufacturer's equipment of the same size and model of that offered under this contract. The equipment furnished shall be designed, constructed, and installed in accordance with the industry accepted

practices and shall operate satisfactorily when installed as shown on the Drawings and operated per manufacturer's recommendations.

2.02 ANCHORS AND SUPPORTS

A. The Contractor shall furnish, install, and protect all necessary guides, bearing plates, anchor and attachment bolts, and all other appurtenances required for the installation of the devices included in the equipment specified. Working Drawings for installation shall be furnished by the equipment manufacturer, and suitable templates shall be used by the Contractor when required in the detailed equipment Specifications.

B. Anchor bolts and fasteners shall be furnished in accordance with Section 05050, Metal Fastening, and with the individual equipment Specifications. All anchor bolts shall be a minimum of 1/2-inch diameter. All anchor bolts, handrail bolts, washers, clips, clamps, and fasteners of any type shall be constructed of 316 stainless steel, unless otherwise specified the individual equipment Specifications.

C. The Contractor shall provide all concrete pads or pedestals required for equipment furnished. All concrete equipment pads shall be a minimum of 6” high, unless otherwise shown on the Drawings and shall be doweled.

D. Pipe sleeves or other means of adjusting anchor bolts shall be provided where indicated or required. Equipment shall be leveled by first using sitting nuts on the anchor bolts, and then filling the space between the equipment base and concrete pedestal with non-shrink grout, unless alternate methods are recommended by the manufacturer and are acceptable to the Engineer (such as shim leveling pumps, or chemical grout). Non-shrink grout shall be as specified in Section 03600, Grout.

2.03 STRUCTURAL STEEL

A. Structural steel used for fabricating equipment shall conform to the requirements of Section 05120, Structural Steel.

B. All materials shall conform to applicable provisions of the AISC Specifications for the design and fabrication of structural steel, and to pertinent ASTM Standard Specifications.

2.04 DISSIMILAR METALS

A. All dissimilar metals shall be properly isolated to the satisfaction of the Engineer.

2.05 GALVANIZING

A. Where required by the equipment specifications, galvanizing shall be performed in accordance with Section 05035, Galvanizing.

2.06 STANDARDIZATION OF GREASE FITTINGS

A. The grease fittings on all mechanical equipment shall be such that they can be serviced with a single type of grease gun. Fittings shall be “Zerk” type.

2.07 ELECTRICAL REQUIREMENTS

A. All electrical equipment and appurtenances, including but not limited to motors, panels, conduit and wiring, etc., specified in the equipment specifications shall comply with the applicable requirements of the Division 16 specifications and the latest National Electric Code.

B. Motors shall conform to the applicable requirements of Section 15170, Electric Motors. Medium voltage motors shall conform to the applicable requirements of Section 15171, Medium Voltage Electric Motors.

C. In the individual equipment specifications, specified motor horsepower is intended to be the minimum size motor to be provided. If a larger motor is required to meet the specified operating conditions and performance requirements, the Contractor shall furnish the larger sized motor and shall upgrade the electrical service (conduit, wires, starters, etc.) at no additional cost to the Owner.

D. Where variable frequency drives (VFDs) are specified, the Contractor shall be responsible for coordinating between equipment supplier and VFD supplier to ensure a complete and operational system. VFDs shall be furnished under Division 16 and shall be as specified in Section 16495, Variable Frequency Drive Systems.

E. Motor starters and controls shall be furnished and installed under Division 16 and Division 17 unless otherwise specified in the individual pump specifications.

2.08 ACCESSORIES, SPARE PARTS, AND SPECIAL TOOLS

A. Spare parts for equipment shall be furnished where indicated in the equipment Specifications or where recommended by the equipment manufacturer.

B. Spare parts shall be identical and interchangeable with original parts.

C. The spare parts shall be packed in containers suitable for long term storage, bearing labels clearly designating the contents and the pieces of equipment for which they are intended.

D. Painting requirements for spare parts shall be identical to those for original, installed parts. Where no painting or protective coating is specified, suitable provisions shall be made to protect against corrosion.

E. Spare parts shall be delivered at the same time as the equipment to which they pertain. Spare parts shall be stored separately in a locked area, maintained by the Contractor, and shall be turned over to the Owner in a group prior to substantial completion. All of these materials shall be properly packed, labeled, and stored where directed by the Owner and Engineer.

F. The Contractor shall furnish all special tools necessary to operate, disassemble, service, repair, and adjust the equipment in accordance with the manufacturers operation and maintenance manual.

G. The Contractor shall furnish a one year supply of all recommended lubricating oils and greases. The manufacturer shall submit a list of at least four manufacturer's standard lubricants which may be used interchangeably for each type of lubricant required. All of these materials shall be properly packed, labeled and stored where directed by the Engineer.

2.09 EQUIPMENT IDENTIFICATION

A. All mechanical equipment shall be provided with a substantial stainless steel nameplate, mechanically fastened with stainless steel hardware in a conspicuous place, and clearly inscribed with the manufacturer's name, year of manufacture, serial number, and principal rating data.

B. Each pump and other piece of mechanical equipment shall also be identified as to name and number by a suitable laminated plastic or stainless-steel nameplate mechanically fastened with stainless steel hardware; for example, "High Service Pump No. 1". Coordinate name and number with same on remotely located controls, control panel, and other related equipment.

C. Nameplates shall not be painted over.

PART 3 -- EXECUTION

3.01 SHOP TESTING

A. All equipment shall be tested in the shop of the manufacturer in a manner which shall conclusively prove that its characteristics comply fully with the requirements of the Contract Documents and that it will operate in the manner specified or implied.

B. No equipment shall be shipped to the project until the Engineer has been furnished a certified copy of test results and has notified the Contractor, in writing, that the results of such tests are acceptable.

C. Five (5) certified copies of the manufacturer's actual test data and interpreted results thereof shall be forwarded to the Engineer for review.

D. If required by the individual equipment Specifications, arrangements shall be made for the Owner/Engineer to witness performance tests in the manufacturer's shop. The Engineer shall be notified ten working days before shop testing commences. Expenses are to be paid by CONTRACTOR.

E. Shop testing of electric motors shall be in accordance with applicable requirements of Section 15170, Electric Motors and Section 16000, Basic Electrical Requirements.

3.02 STORAGE OF EQUIPMENT AND MATERIALS

A. Contractor shall store his equipment and materials at the job site in strict accordance with the manufacturer's recommendations and as directed by the Owner or Engineer, and in conformity to applicable statutes, ordinances, regulations, and rulings of the public

authority having jurisdiction. Equipment and materials shall not be delivered to the site prior to 90 days in advance of the scheduled installation. Partial payment requests will not be processed for materials delivered prior to 90 days before installation or for materials that are not properly stored.

B. Material or equipment stored on the job site is stored at the Contractor's risk. Any damage sustained of whatever nature shall be repaired to the Engineer's satisfaction at no expense to the Owner. Stored electrical equipment is to be protected from the elements and shall have space heaters energized.

C. Contractor shall not store unnecessary materials or equipment on the job site and shall take care to prevent any structure from being loaded with a weight which will endanger its security or the safety of persons.

D. Contractor shall observe all regulatory signs for loadings on structures, fire safety, and smoking areas.

E. Contractor shall not store materials or encroach upon private property without the written consent of the owners of such private property.

3.03 MANUFACTURER'S FIELD SERVICES

A. The Contractor shall arrange for a qualified Technical Representative from each manufacturer or supplier of equipment who is regularly involved in the inspection, installation, start-up, troubleshooting, testing, maintenance, and operation of the specified equipment. Qualification of the Technical Representative shall be appropriate to the type of equipment furnished and subject to the approval of the Engineer and the Owner. Where equipment furnished has significant process complexity, furnish the services of engineering personnel knowledgeable in the process involved and the function of the equipment. When necessary, the Contractor shall schedule multiple Technical Representatives to be present at the same time for the purpose of coordinating the operation of multiple pieces of related equipment.

B. For each site visit, the Technical Representative shall submit jointly to the Owner, the Engineer, and the Contractor a complete signed report of the results of his inspection, operation, adjustments, and testing. The report shall include detailed descriptions of the points inspected, tests and adjustments made, quantitative results obtained if such are specified.

C. The manufacturer's Technical Representative shall provide the following services.

1. Installation: The Technical Representative shall inspect the installed equipment to verify that installation is in accordance with the manufacturer's requirements. Where required by individual equipment specifications, the Technical Representative shall also supervise the installation of the equipment.

2. Testing: After installation of the equipment has been completed and the equipment is presumably ready for operation, but before it is operated by others, the Technical Representative shall inspect, operate, test, and adjust the equipment as required to prove that the equipment is in proper condition for satisfactory operation under

the conditions specified. Unless otherwise noted in the signed site visit report, the report shall constitute a certification that the equipment conforms to the requirements of the Contract and is ready for startup and that nothing in the installation will render the manufacturer's warranty null and void. The report shall include date of final acceptance field test, as well as a listing of all persons present during tests.

3. Startup: The Technical Representative shall start up the equipment for actual service with the help of the Contractor. In the event that equipment or installation problems are experienced, the Contractor and the representative shall provide the necessary services until the equipment is operating satisfactorily and performing according to the specifications at no additional cost to the Owner. Unless otherwise noted in the signed site visit report, the report shall constitute a certification that the equipment conforms to the requirements of the Contract and is ready for permanent operation and that nothing in the installation will render the manufacturer's warranty null and void.

4. Training: The Technical Representative shall instruct the Owner's operating personnel in correct operation and maintenance procedures. The instruction shall demonstrate start-up, operation, control, adjustment, trouble-shooting, servicing, maintenance, and shutdown of each item of equipment. Such instruction shall be scheduled at a time arranged with the Owner at least 2 weeks in advance of the training and shall be provided while the respective Technical Representative's equipment is fully operational. The Contractor shall have submitted, and had accepted, the O&M Manuals prior to commencement of training. Training shall be provided to three separate shifts of the Owner's personnel between the hours of 8:00 A.M. and 6:00 P.M. as necessary. The Contractor shall provide professional video taping of all training sessions. Completed, labeled tapes shall be provided to the Owner for each type of training session.

5. Services after Startup: Where required by the individual equipment specifications, the Technical Representative shall return to the project site thirty (30) days after the start up date to review the equipment performance, correct any equipment problems, and conduct operation and maintenance classes as required by the Owner. This follow-up trip is required in addition to the specified services of Technical Representative prior to and during equipment startup. At this time, if there are no equipment problems, each manufacturer shall certify to the Owner in writing that his equipment is fully operational and capable of meeting operating requirements. If the equipment is operating incorrectly, the Technical Representative will make no certification to the Owner until the problems are corrected and the equipment demonstrates a successful thirty (30) days operating period.

D. Services of the Technical Representative will require a minimum of two (2) site visits, one for installation and testing and one for startup and training, and will be for the minimum number of days recommended by the manufacturer and approved by the Engineer but will not be less than the number of days specified in individual equipment sections.

E. The Contract amount shall include the cost of furnishing the Technical Representative for the minimum number of days specified, and any additional time required to achieve

successful installation and operation. The times specified for services by the Technical Representative in the equipment Specifications are exclusive of travel time to and from the facility and shall not be construed as to relieve the manufacturer of any additional visits to provide sufficient service to place the equipment in satisfactory operation.

F. The Contractor shall notify the Engineer at least 14 days in advance of each equipment test or Owner training session.

G. The Technical Representative shall sign in and out at the office of the Engineer's Resident Project Representative on each day he is at the project.

3.04 INSTALLATION

A. The Contractor shall obtain written installation manuals from the equipment manufacturer prior to installation. Equipment shall be installed strictly in accordance with recommendations of the manufacturer. A copy of all installation instructions shall be furnished the Engineer's field representative one week prior to installation.

B. The Contractor shall have on hand sufficient personnel, proper construction equipment, and machinery of ample capacity to facilitate the work and to handle all emergencies normally encountered in work of this character. To minimize field erection problems, mechanical units shall be factory-assembled insofar as practical.

C. Equipment shall be erected in a neat and workmanlike manner on the foundations at the locations and elevations shown on the Drawings.

D. All equipment sections and loose items shall be match-marked prior to shipping.

E. For equipment such as pumping units, which require field alignment and connections, the Contractor shall provide the services of the manufacturer's qualified mechanic, millwright, or machinist, to align the pump and motor prior to making piping connections or anchoring the pump base. Alignment shall be as specified herein.

F. The Contractor shall furnish oil and grease for initial operation and testing. The manufacturer and grades of oil and grease shall be in accordance with the recommendations of the equipment manufacturer.

3.05 ALIGNMENT

A. Set equipment to dimensions shown on drawings. Dimensions shall be accurate to +/- 1/16 inch unless otherwise noted on the drawings. Wedges shall not be used for leveling, aligning, or supporting equipment.

B. General Equipment Leveling: Non-rotating equipment shall be set level to +/- 1/16 inch per 10 foot length (.005 inch per foot) unless otherwise noted on the drawings. Shims shall be used unless equipment is furnished with leveling feet. Set shims flush with equipment baseplate edges. When grouting is required, equipment shall be shimmed to allow a minimum of one inch grout thickness. Grout shall cover shims at least 3 inches. Final level check shall be held for inspection and approval by Engineer before proceeding.

C. Grouting

1. Fill anchor bolt holes or sleeves with grout, after bolt alignment is proven, and prior to placing grout under equipment bases.

2. Surface Preparation. Roughen surface by chipping, removing laitance, and unsound concrete. Clean area of all foreign material such as oil, grease, and scale. Saturate area with water at least 4 hours prior to grouting, removing excess water ponds.

3. Application. Place grout after the equipment base has been set and its alignment and level have been approved. Form around the base, mix grout, and place in accordance with the grout manufacturers published instructions. Eliminate all air or water pockets beneath the base using a drag chain or rope.

4. Finishing. Point the edges of the grout to form a smooth 45 degree slope.

5. After grout has cured (not before 3 days after placement) paint exposed surfaces of grout with shellac.

6. Level Verification. After grout has cured, and immediately prior to drive alignment, recheck equipment for level and plumb. Re-level and square as necessary. Hold final checks for inspection and approval by Engineer.

D. Inspect for and remove all machining burrs or thread pulls in female holes on mating surfaces of mounting frame and machine feet.

E. Inspect and clean equipment mounting base pads, feet, and frames to remove all grease, rust, paint and dirt.

F. Assembled equipment shafts shall be set level to .0015 inches per foot of shaft length (+/- 0.0005 inches) up to a maximum of 0.015 inches for any length shaft unless the manufacturers requirements are more stringent or unless otherwise noted in the equipment specifications. Use the machined surfaces on which the equipment sets for the base/mounting frame leveling plane. Use the machined shaft surface for equipment leveling plane.

G. Sprocket and Sheave Alignment. Check shaft mounted components for face runout and eccentricity (outside diameter) runout by magnetically mounting a dial indicator on a stationary base and indicating over 360 degrees on a continuous machined surface at the outside diameter of the component. Maximum allowable total indicated face runout and eccentricity for sprockets and sheaves will be per ANSI Standard B29.1-1975.

H. Belt tensioning. Set drive belt tension to manufacturer's specification for the belt type. Recheck alignment after drive tensioning.

I. Thermal/Mechanical Growth. Thermal/mechanical growth corrections for driver and driven machines will be used in vertical and horizontal alignment where applicable. The equipment manufacturer will determine thermal/mechanical growth applicability for any machine and provide the correction offsets to be used.

J. Rotating Shaft Alignment

1. Fixtures will be set up on the driver and driven machine, machines shaft surfaces. Machined coupling hubs may be used only if there is no clearance to mount fixtures directly on the shafts.

2. Primary alignment method for direct drive machines is when coupled. Uncoupled alignment will be used only when approved by the Engineer.

3. Account for possible coupling flex by always rotating coupled machines in the same direction during alignment.

4. Uncoupled machines must be connected so that both shafts turn together without relative motion during alignment.

5. Indicator bar sag will be measured and included for each reverse indicator alignment setup.

6. Reverse Dial Indicator. The final maximum allowable misalignment: vertical and horizontal from the desired targets of .000 inches (for a non-thermal growth machine) or from the given target readings (for a thermal growth machine) must meet BOTH of the following conditions simultaneously: 1/2 the final total indicator reading at each indicator will be no more than shown in the table below AND the final remaining correction at each machine foot be no more than .001 inches of required movement.

Machine Speed (RPM)	Total Misalignment* (inches)
Up to 1800	.002
1800 and greater	.001

* 1/2 indicator reading

3.06 FIELD TESTING

A. All equipment shall be set, aligned and assembled in conformance with the manufacturer's drawings and instructions. Provide all necessary calibrated instruments to execute performance tests. Submit report certified by the pump manufacturer’s representative.

B. Preliminary Field Tests, Yellow Tag

1. As soon as conditions permit, after the equipment has been secured in its permanent position, the Contractor shall:

a. Verify that the equipment is free from defects.

b. Check for alignment as specified herein.

c. Check for direction of rotation.

d. Check motor for no load current draw.

2. Contractor shall flush all bearings, gear housings, etc., in accordance with the manufacturer's recommendations, to remove any foreign matter accumulated during shipment, storage or erection. Lubricants shall be added as required by the manufacturer's instructions.

3. When the Contractor has demonstrated to the Engineer that the equipment is ready for operation, a yellow tag will be issued. The tag will be signed by the Engineer, or his assigned representative and attached to the equipment. The tag shall not be removed.

4. Preliminary field tests, yellow tag, must be completed before equipment is subjected to final field tests, blue tag.

C. Final Field Tests, Blue Tag

1. Upon completion of the above, and at a time approved by the Engineer, the equipment will be tested by operating it as a unit with all related piping, ducting, electrical and controls, and other ancillary facilities.

2. The equipment will be placed in continuous operation as prescribed or required and witnessed by the Engineer or his assigned representative and the Owner or his assigned representative.

3. The tests shall prove that the equipment and appurtenances are properly installed, meet their operating cycles and are free from defects such as overheating, overloading, and undue vibration and noise. Operating field tests shall consist of the following:

a. Check equipment for excessive vibration and noise as specified herein.

b. Check motor current draw under load conditions. The rated motor nameplate current shall not be exceeded.

c. Recheck alignment with dial indicators where applicable, after unit has run under load for a minimum of 24 hours.

D. In addition to the above described field tests, any other tests specifically required by Section 11100, Pumps-General, the individual equipment Specifications, or by the manufacturer shall be performed.

E. Until final field tests are acceptable to the Engineer, the Contractor shall make all necessary changes, readjustments and replacements at no additional cost to the Owner.

F. Upon acceptance of the field tests, a blue tag will be issued. The tag will be signed by the Engineer and attached to the unit. The tag shall not be removed and no further construction work will be performed on the unit, except as required during start-up operations and directed by the Engineer.

G. Defects which cannot be corrected by installation adjustments will be sufficient grounds for rejection of any equipment.

H. All costs in connection with field testing of equipment such as lubricants, temporary instruments, labor, equipment, etc., shall be borne by the Contractor. Power, fuel, chemicals, water, etc. normally consumed by specific equipment shall be supplied by the Owner unless otherwise specified in the individual equipment specifications.

I. The Contractor shall be fully responsible for the proper operation of equipment during tests and instruction periods and shall neither have nor make any claim for damage which may occur to equipment prior to the time when the Owner formally takes over the operation thereof.

J. Field testing of electric motors shall be in accordance with Section 15170, Electric Motors and Section 16000, Basic Electrical Requirements.

3.07 VIBRATION TESTING

A. Unless specified otherwise in the detailed equipment specifications, each pump, blower, compressor, motor or similar item of stationary rotating equipment having a rated power in excess of 40 horsepower shall be tested after installation for acceptable vibration levels.

B. Vibration testing shall be performed by an experienced factory-trained and authorized third-party analysis expert (not a sales representative) retained by the Contractor and approved by the Engineer. Each unit or pump system shall be tested separately without duplicate equipment running. All field testing shall be done in the presence of the Engineer. The Engineer shall be furnished with four (4) certified copies of vibration test data for each test performed.

C. For systems with variable speed drives, tests shall be conducted at various speeds between maximum and minimum. For systems with two-speed drives, tests shall be conducted at both speeds. For systems with constant-speed drive, tests shall be conducted under various loading conditions as determined by the Engineer.

D. All field vibration tests shall be performed with the equipment operating on the product for which it is intended, or a substitute acceptable to the Engineer.

E. The term displacement, as used herein, shall mean total peak-to-peak movement of vibrating equipment, in mils; velocity or speed of the vibration cycle, measured in G's. Displacement and velocity shall be measured by suitable equipment equal to IRD Mechanalysis, Bentley, Nevada.

E. Frequency of vibration, in cycles per minute (cpm), shall be determined when vibration exceeds specified levels or as otherwise necessary. Vibration shall be measured on the bearing housing, unless other locations are deemed necessary by the vibration analysis expert and Engineer.

F. For all equipment tested, vibration shall be checked in the radial and axial directions. Unless otherwise specified elsewhere, axial vibration shall not exceed 0.1 in/sec; and radial vibration shall not exceed 0.2 in/sec. For pumps radial vibration shall not exceed

that permitted by the Hydraulic Institute Standards except that, at vibration frequencies in excess of 8,000 cpm, the velocity shall not exceed 0.2 in/sec.

G. Copies of test results shall be submitted to the Engineer for review. Should the vibration field test results exceed shop test results, the manufacturer's recommendations, or the limits specified herein, the Contractor shall correct the deficiencies within thirty (30) days. After corrections have been completed, the vibration testing shall be re-run and the results re-submitted to the Engineer for review.

H. Noise or vibration in any rotating equipment which the Engineer judges to be excessive or damaging, shall be cause for rejection.

3.08 FAILURE OF EQUIPMENT TO PERFORM

A. Any defects in the equipment, or failure to meet the guarantees or performance requirements of the Specifications shall be promptly corrected by the Contractor by replacements or otherwise.

B. If the Contractor fails to make these corrections, or if the improved equipment shall fail again to meet the guarantees or specified requirements, the Owner, notwithstanding his having made partial payment for work and materials which have entered into the manufacture of said equipment, may reject said equipment and order the Contractor to remove it from the premises at the Contractor's expense.

C. The Contractor shall then obtain specified equipment to meet the contract requirements or upon mutual agreement with the Owner, adjust the contract price to reflect not supplying the specific equipment item.

D. In case the Owner rejects said equipment, then the Contractor hereby agrees to repay to the Owner all sums of money paid to him for said rejected equipment on progress certificates or otherwise on account of the lump sum prices herein specified.

E. Upon receipt of said sums of money, the Owner will execute and deliver to the Contractor a bill of sale of all his rights, title, and interest in and to said rejected equipment; provided, however, that said equipment shall not be removed from the premises until the Owner obtains from other sources other equipment to take the place of that rejected.

F. Said bill of sale shall not abrogate Owner's right to recover damages for delays, losses, or other conditions arising out of the basic contract.

3.09 PAINTING

A. All surface preparation, shop painting, field repairs, finish painting, and other pertinent detailed painting specifications shall conform to applicable sections of Section 09900, Painting.

B. All shop coatings shall be compatible with proposed field coatings.

C. All inaccessible surfaces of the equipment, which normally require painting, shall be finished painted by the manufacturer. The equipment and motor shall be painted with a

high quality epoxy polyamide semi-gloss coating specifically resistant to chemical, solvent, moisture, and acid environmental conditions, unless otherwise specified.

D. Gears, bearing surfaces, and other unpainted surfaces shall be protected prior to shipment by a heavy covering of rust-preventive compound sprayed or hand applied which shall be maintained until the equipment is placed in operation. This coating shall be easily removable by a solvent.

3.10 WELDING

A. The Equipment Manufacturer's shop welding procedures, welders, and welding operators shall be qualified and certified in accordance with the requirement of AWS D1.1 "Structural Welding Code - Steel" or AWS D1.2 "Structural Welding Code - Aluminum" of the American Welding Society, as applicable.

B. The Contractor's welding procedures, welders, and welding operators shall be qualified and certified in accordance with the requirements of AWS D1.1 "Structural Welding Code - Steel" or AWS D1.2 "Structural Welding Code - Aluminum" of the American Welding Society, as applicable.

C. The Contractor shall perform all field welding in conformance with the information shown on the Equipment Manufacturer's drawings regarding location, type, size, and length of all welds in accordance with "Standard Welding Symbols" AWS A2.0 of the American Welding Society, and special conditions, as shown by notes and details.

- END OF SECTION -

SECTIONS 11001 - TEMPORARY HIGH SERVICE PUMPS

PART 1 -- GENERAL

1.01 THE REQUIREMENT

A. The CONTRACTOR shall design and furnish all tools, supplies, materials, labor, equipment, power, maintenance, necessary for the installation, testing and placing into operation of a temporary pumping system to allow complete shutdown of the existing High Service Pump Station for an extended period to allow construction of the proposed replacement pumps and electrical equipment.

B. The design, installation and operation of the temporary pumping system shall be the CONTRACTOR's responsibility. The CONTRACTOR shall employ the services of a vendor who can demonstrate to the ENGINEER that it specializes in the design and operation of Temporary High Service pumping systems. The vendor shall provide at least five (5) references of projects of a similar size and complexity as this project performed by the vendor's firm within the past ten years.

C. The Temporary High Service system shall meet the requirements of all codes and regulatory agencies having jurisdiction.

D. Refer to the Drawings with the titles listed below for additional requirements.

1. "TEMPORARY HIGH SERVICE PUMP STATION"

2. "SUCTION PIPING MODIFICATIONS"

3. "ELECTRICAL OVERALL PLANT SINGLE LINE DIAGRAM – DEMOLITION AND TEMPORARY"

1.02 DEFINITIONS

A. "Interruption of pumping operations" is defined as any activity that will result in a change in the current method of operation. CONTRACTOR shall request such "interruption of pumping operations" from the CITY no less than ninety-six (96) hours in advance. CITY may defer the request as allowed by Article 2.01.A.4 of this Section.

B. The terms "open, close, start, stop, operate, verify, energize, de-energize, transfer, switch-over, etc" when used in conjunction with equipment that is in-service or about to be placed in-service are understood to mean: The CITY's operation or maintenance staff shall perform the operation upon written request from the CONTRACTOR.

C. The term "operational test" refers to the period of specified duration that the installed system is tested to verify operational integrity of a system prior to placing the system in-service. Operational testing requires that representatives of the equipment manufacturers be on-site for timely identification and resolution of system issues.

D. "Low Flow Period" refers to the time of day when the pump station flow rate reaches the diurnal minimum. It occurs between the hours of 4:00 AM and 8:00 AM.

1.03 SUBMITTALS

A. Temporary High Service Pumping Plan: The CONTRACTOR shall retain a Professional Engineer, licensed in the State of Florida to design the temporary pumping facilities. Prepare and submit detailed Drawings and descriptions of the temporary pumping system. The drawings shall be specific and complete, including such items as schedules, locations, elevations, capacities of equipment, materials and all other incidental items necessary and/or required for a complete and operable Temporary High Service pumping system. The Temporary High Service pumping plan documents shall be signed and sealed by the engineer. No construction shall begin until all provisions and requirements have been reviewed and approved by the ENGINEER. The plan shall include, but is not limited to, the following details:

1. Detailed drawings showing all required equipment and staging areas for pumps

2. Number, size, material, location and method of installation of suction piping

3. Number, size, material, method of installation and location of installation of discharge piping

4. Temporary High Service pump sizes, capacity, number of each size to be on site and power requirements

5. Pump curves showing pump operating range are to be submitted

6. Thrust and restraint block sizes and locations

7. Sections showing proposed suction and discharge pipes along with the connections to the existing piping

8. Method of noise control for each pump

9. Any temporary pipe supports and anchoring required

10. Design for access to Temporary High Service Pumps locations indicated on the drawings

11. Selection of Temporary High Service pumping pipe size

12. Schedule for installation of and maintenance of Temporary High Service pumping lines

13. Detailed description and drawings for temporary electrical power

14. Detailed description and drawings for automated pump controls

B. Sequence of Construction Plan: Furnish in accordance with Specification Section 01300, “Submittals”.

1. CONTRACTOR’s Sequence of Construction defining work to be performed,

including the following items:

a. Definition of the start date, duration and end date for each of the segments of the work.

b. For each segment of work, define activities to be performed by or witnessed by the CITY and date on which these activities are to be performed.

c. Scheduling/timing of manufacturers field services, as specified.

2. Interruption of the operation of the existing pumping station is required to perform this work. Define the purpose for the interruption; date and time of interruption; and duration of interruption.

3. Provide complete list of equipment and material that is required to perform each segment of work.

1.04 CERTIFICATIONS

A. NSF 61: All materials in contact with potable water shall comply with NSF International standard 61: Drinking Water System Components – Health Effects. The shop drawing shall certify compliance with this standard.

B. NSF 372: All materials in contact with potable water shall comply with NSF International standard 372: Drinking Water System Components – Lead Content. The shop drawing shall certify compliance with this standard.

PART 2 -- PRODUCTS

2.01 PUMPING EQUIPMENT

A. General:

1. The CONTRACTOR shall design, provide, maintain and operate all temporary facilities such pumping equipment, conduits, all necessary power, and all other labor and equipment necessary to ensure that water service is not interrupted.

2. It is the CONTRACTOR's responsibility to provide equipment that is adequate for the performance of the Work under this Contract within the time specified. All equipment shall be kept in satisfactory operating condition, shall be capable of safely and efficiently performing the required Work, and shall be subject to review by the CITY's representative at any time within the duration of the Contract. All work hereunder shall conform to the applicable requirements of the OSHA Standards for Construction.

3. Should the CONTRACTOR fail to maintain the continuous operation of the Temporary High Service pumping system, the CITY shall repair/operate the Temporary High Service pumping system to maintain water service. The CITY shall deduct the costs for its labor and materials incurred during operation/repair of the Temporary High Service system from monies owed the CONTRACTOR for

other portions of the work.

4. Pump station operational requirements take precedence over CONTRACTOR activities. Therefore, interruption of pump station operations shall be coordinated and are subject to the operational requirements of the CITY. CONTRACTOR shall assume that any interruption of pumping system operations may be deferred by up to one week from the requested time due to operational constraints.

5. The CONTRACTOR shall provide all needed temporary electrical facilities to operate the Temporary High Service Pumps.

6. Pumps used shall be fully automatic self-priming units that do not require the use of vacuum pumps in the priming system.

7. The Temporary High Service Pumps shall be electric powered.

8. Provide standby mobile power generators and fuel. The standby generators shall be capable of powering two Temporary High Service Pumps in the event of a power outage.

9. Standby pumping shall be supplied by the CITY's existing six million gallon per day diesel driven pump that is located in a building to the east the High Service Pump Station. The CITY will operate the pump upon request at dates and times agreed to in writing.

10. CONTRACTOR shall design, furnish, and install all electrical power distribution and control equipment necessary to operate the pumps.

11. Pumps: All pumps shall be Godwin Dri-Prime® model HL250M electric pump, or equal.

12. Pump Framing: Each pump shall be mounted in a painted steel framing system.

13. Isolation Valves: The temporary high service pump supplier shall provide knife gate valves for isolation of the pumps as indicated on the Drawings.

14. Check Valves: The temporary high service pump supplier shall provide check valves for each pump as indicated on the Drawings.

15. Control Panel: Furnish and install a control panel that will automate the operation of the pumps. The control panel shall be capable of remote wireless monitoring via the internet.

16. Supplier: All temporary equipment (i.e., pumps, VFDs, control panel, instrumentation, etc.) shall be supplied by Xylem Dewatering Solutions. Xylem Contact: Andrew Chapmen; mobile phone: 954-829-7741.

B. Temporary High Service Pumping Requirements: The CONTRACTOR shall be responsible for the design and construction of the Temporary High Service facilities as

described herein and indicated on the Drawings. Requirements for the Temporary High Service pumping system is as follows:

1. Temporary High Service pumping system shall be operated 24 hours per day while the existing pump station is modified.

2. Each Temporary High Service Pumps shall meet the following design operating parameters:

    a. Motor Size: As required for non-overloading operation

    b. Design Capacity: 3,500 gpm at 175' TDH at 100% speed

3. CITY will provide an on-site operator 24-hours per day, seven days per week for the duration of the Temporary High Service pumping operation to ensure continuous operation of the system.

4. Noise:

    a. Noise Limit: The Temporary High Service pumps shall be quiet models producing no more than 60 dBA at a distance of 25 feet from the property line.

    b. Noise Measurements: The noise shall be measured on a decibel or sound level meter of standard design or quality, operated on the A-weighted scale.

    c. Unlawful Noise: Noise measured greater than the above described limit is unlawful per Section 19-21 Hallandale Beach Code of Ordinances.

    d. Noise Permit: Noise If the equipment cannot meet the specified noise limit, obtain a permit per the provisions of Section 19-21 Hallandale Beach Code of Ordinances or provide alternate equipment.

5. Temporary Piping: Design, furnish and install temporary piping to connect the Temporary High Service Pumps to the existing piping as indicated in the Drawings. The temporary piping shall be steel, ductile iron, or polyethylene pipe with restrained joints. Under no circumstances will aluminum "irrigation" type piping or glued PVC pipe be allowed.

6. Each pump shall be equipped with a variable frequency drive (VFD).

7. Each pump shall be equipped with a pressure gauge on the suction inlet and discharge outlet of the pump.

8. The discharge header shall be equipped with pressure transmitter wired to the control panel and the VFDs shall automatically speed up and slow down to maintain a discharge pressure setpoint. The discharge pressure setpoint shall be adjustable. The initial setpoint shall be 65 psi.

9. Control Sequence:

a. The normal minimum water flow rate during the night is about 4,000 gpm.

b. Operate two pumps continuously.

c. Vary the speed of the pumps to maintain a constant discharge pressure.

d. If the discharge pressure drops below 55 psi (adjustable setpoint) active an alarm horn and an alarm strobe light. Design, furnish and install alarm horns and lights locally at the pumps and at the Membrane Building control room.

10. The CITY shall pay for the electrical power consumed by the CONTRACTOR's temporary electrical system and pumping equipment.

11. The CONTRACTOR is responsible for the temporary electrical service including all necessary engineering services, design drawings, building department permits, electrical equipment design and installation, wire and conduit installation, coordination with FPL, compliance with all codes, standards, arc flash analysis, and labeling.

12. The contractor shall comply with all Florida Power and Light requirements in establishing the temporary service. The temporary electrical service shall not interfere with the re-connection and energization of the permanent electrical systems. The CONTRACTOR shall make provisions to prevent overload of the existing utility transformers during start-up and testing activities of the permanent pumps.

2.02 GROUT

A. The CONTRACTOR shall furnish and install grout – as recommended by the Supplier – to level the pump skids.

2.03 ANCHOR BOLTS

A. The CONTRACTOR shall furnish and install anchor bolts – as recommended by the Supplier – to secure the pump skids.

PART 3 -- EXECUTION

3.01 DIURNAL FLOW PATTERN

A. The graphic below presents a typical diurnal flow (in gallons per minute) for the CITY's existing high service pump station. The temporary high service pumps shall maintain a minimum of 65 psi at the pump discharge under all flow conditions between 3,000 to 6,000 gpm.

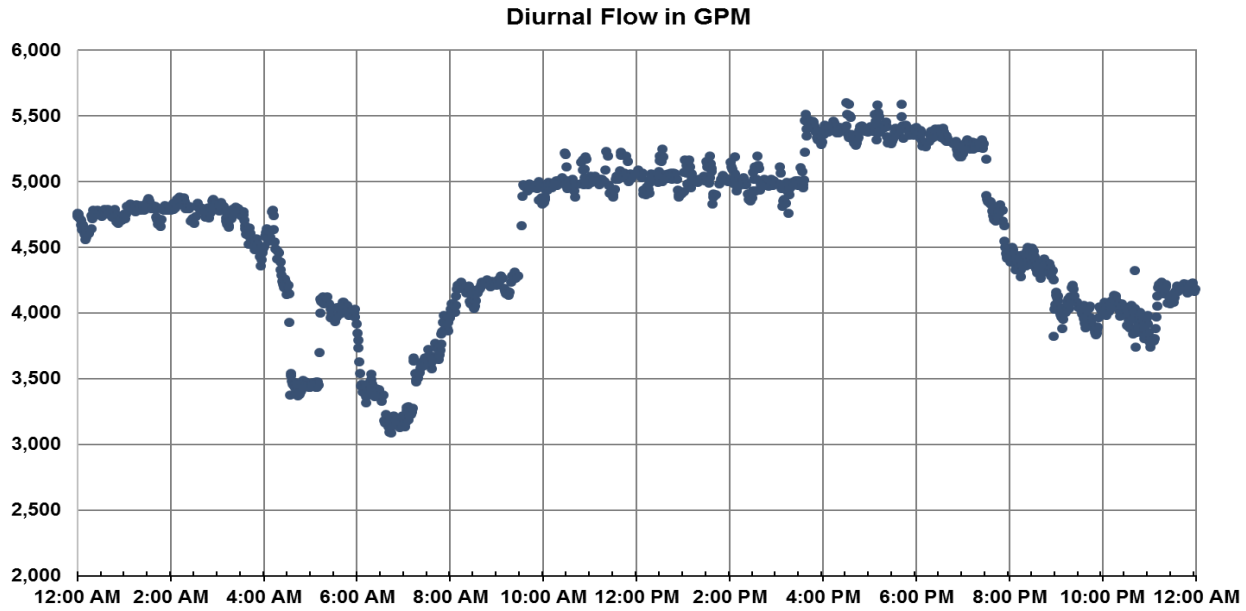

3.02 PERMITS

A. The ENGINEER shall obtain the permit from the Florida Department of Health in Broward County needed for the temporary pumps and piping. A copy of this permit will be provided to the CONTRACTOR.

B. All other types of permits shall be the responsibility of the CONTRACTOR.

3.03 PREPARATION

C. Locate and carefully expose all existing piping shown on the Drawings for connection with the proposed temporary piping as soon as possible after the notice to proceed. Identify any conflicts and notify the ENGINEER.

3.04 INSTALLATION AND REMOVAL

A. Refer to the notes on the Drawings associated with the Temporary High Service Pumps and the sequence of construction.

B. After the ENGINEER has accepted the new High Service Pump Station, the CONTRACTOR shall obtain the written permission of the ENGINEER to remove the Temporary High Service Pumping facilities.

C. Upon completion of the Temporary High Service pumping operations, and after the receipt of written permission from the ENGINEER, the CONTRACTOR shall remove all the temporary piping, restore all property (e.g., pavement, sidewalks, grass, etc.) to new conditions.

3.05 QUALITY CONTROL AND MAINTENANCE

a. Testing: CONTRACTOR shall perform leakage and pressure tests of the Temporary High Service pumping piping using clean water prior to actual operation. The ENGINEER shall be given 24-hour notice prior to testing.

b. Inspection: CONTRACTOR shall inspect the Temporary High Service pumping system every two hours (during normal working hours) to ensure that the system is working correctly. Maintain a log documenting the inspections.

c. Maintenance Service: CONTRACTOR shall insure that the temporary pumping system is properly maintained.

d. Extra Materials: Spare parts for pumps and piping shall be kept on site as required. Adequate hoisting equipment for each pump and accessories shall be maintained on the site.

3.06 SEQUENCE OF CONSTRUCTION

A. This Section establishes a proposed sequence of construction activities and defines constraints which shall be accommodated and specific time restraints associated with the installation of the Temporary High Service pumps. Reference specification Section 01520 for additional sequences for other portions of the work.

B. CONTRACTOR shall review this proposed Sequence of Construction and thoroughly familiarize itself with all constraints for maintaining operations of the pump station. CONTRACTOR shall propose a Sequence of Construction incorporating these constraints and secure concurrence of CITY prior to starting work. Should the CONTRACTOR decide to adopt this proposed Sequence of Construction as the proposed Sequence of Construction for the project, the CONTRACTOR does so with the understanding that this in no way relieves the CONTRACTOR from its obligations for preparation of a workable Sequence of Construction and assuming full responsibility for same.

C. The CONTRACTOR shall submit to the ENGINEER a construction plan and schedule, which details the CONTRACTOR's design for the temporary pumping and electrical that ensures no interruption of water service.

D. CONTRACTOR shall not be permitted to stop the existing high service pumps except as defined under the sequence of construction.

E. Low pressure in the CITY's distribution system due to the CONTRACTOR not completing the suction piping modifications in the allotted four-hour shutdown that result in fines or fees from regulatory agencies shall be paid for the CONTRACTOR.

F. Low pressure in the CITY's distribution system due to failure of the CONTRACTOR's Temporary High Service Pumping facilities that result in fines or fees from regulatory agencies shall be paid for the CONTRACTOR.

G. One week prior to connections being made to existing structures or pipes, a coordination meeting shall be held between the CONTRACTOR, ENGINEER, and CITY to discuss the construction plan previously submitted by the CONTRACTOR.

H. The ENGINEER and CITY shall be notified 24 hours prior to any actual interruptions or connections being made. Begin no work prior to securing CITY's approval of respective connection plan and work schedule.

I. Temporary High Service Pumping Installation Sequence: Critical events in the sequence of construction are specified herein. The outline sequence of construction does not include all items necessary to complete the Work, but is intended to identify the sequence of critical events necessary to eliminate disruption to the CITY's facilities and to ensure compliance with regulatory requirements. It shall be understood by the CONTRACTOR that the critical events identified are not all inclusive and that additional items of work not shown may be required. The sequence of construction is a precedence requirement and does not attempt to schedule the CONTRACTOR's Work.

1. Construct to the maximum extent possible all temporary pumping facilities and electrical equipment prior to making the final piping connections.

2. Flush and pressure test temporary piping.

3. Test all temporary pumping and electrical equipment

4. Pre-construct piping assemblies to the maximum extent practical to facilitate rapid installation.

5. Disinfect and obtain bacteriological clearance for all temporary piping (except for the final connections), valves and pumps.

6. Swab the interior of the final connection piping and valves with disinfectant per the methods described in American Water Works Association Standard C-651.

7. Once permission from the Broward County Health Department is obtained, the CONTRACTOR shall request a short-term shutdown of the existing High Service Pump Station so that the final connections between the existing and proposed piping can be completed.

8. At an agreed upon date and time, the CITY will begin operating the 6 mgd Diesel Driven Pump.

9. Once the 6 mgd Diesel Driven Pump is operating, the CITY will deenergize the existing High Service Pump Station. The CITY will allow a four-hour shutdown of the High Service Pump Station from 4:00 am to 8:00 am.

10. A shutdown of the existing High Service Pump Station longer than four hours while running the 6 mgd Diesel Driven Pump would result in low water pressure within the CITY's distribution system.

11. Start and complete the suction piping modifications – shown on Drawing C-6 – within the four-hour shutdown period.

12. Return the existing High Service Pump Station to service.

13. Complete the 24-inch hot tap of the 24-inch High Service Pump Station Discharge illustrated on Drawing C-5.

14. Conduct operational testing of the Temporary High Service Pumps. Operate the system in automatic mode for 48 hours continuous without interruption.

15. Upon receiving the ENGINEER's written acceptance of the Temporary High Service Pumps, the CONTRACTOR shall request permission to install the line-stop and stop flow through the 24-inch High Service Pump Station Discharge as illustrated on Drawing C-5.

16. The 24-inch gate valve insertion on the existing high service pump station discharge pipe shall be performed at an agreed upon date and time, as follows:

    i. Operate the Temporary High Service Pumps and de-energize the existing High Service Pump Station.

    ii. Activate the line-stop and stop flow through the existing 24-inch high service pump station discharge pipe.

    iii. Cut into the existing 24-inch high service pump station discharge pipe and complete the 24-gate valve insertion as illustrated on Drawing C-5.

17. Obtain the written permission of the ENGINEER to isolate the existing High Service Pump Station and begin demolition work within the existing High Service Pump Station Building. Once permission is obtained, the CONTRACTOR shall operate the Temporary High Service Pumps continuously until the new pump station is accepted by the ENGINEER.

- END OF SECTION -

SECTION 11100 - PUMPS, GENERAL

PART 1 -- GENERAL

1.01 THE REQUIREMENT

A. The CONTRACTOR shall furnish and install all tools, supplies, materials, equipment and labor necessary for the installation, testing, and placing into operation of all pumps and pumping appurtenances, complete and operable, all in accordance with the requirements of the Contract Documents.

B. All pumping equipment shall be provided in accordance with the requirements of Section 11000, Equipment General Provisions.

C. The provisions of this Section shall apply to all pumps and pumping equipment specified, except where otherwise specified in the Contract Documents.

D. The CONTRACTOR, through a single Supplier, shall have unit responsibility for the furnishing and functional operation of a given type of complete pump systems including the pumps, drives, drive motors, speed control equipment (where variable speed drives are required) and accessories. The designated single Supplier, however, need not manufacture more than one part of the unit (pump, or motor and drive), but shall coordinate the design, assembly, testing, and erection of the unit(s) as specified herein.

E. The pumps shall be provided complete with all accessories, shims, sheaves, couplings, and other appurtenances as specified, as as may be required for a complete and operating installation.

1.02 RELATED WORK SPECIFIED ELSEWHERE

A. Section 01300 – Submittals

B. Section 05500 – Metal Fabrications

C. Section 09900 – Painting

D. Section 11000 – Equipment General Provisions

E. Section 15000 – Basic Mechanical Requirements

F. Section 16000 – Basic Electrical Requirements

G. Section 15170 – Electric Motors

H. Section 16495 - Variable Frequency Drive Systems

1.03 REFERENCE SPECIFICATIONS, CODES AND STANDARDS

A. Codes: The Building Code, as referenced herein, shall be the Florida Building Code, as specified in Section 01090, Reference Standards.

B. Commercial Standards: Pumping system equipment, installation and testing shall be in accordance with the following applicable codes and standards:

1. Hydraulic Institute

   a. ANSI/HI 1.1-1.2-2008 Centrifugal Nomenclature

   b. ANSI/HI 1.3-2009 Rotodynamic Pumps for Design and Application

   c. ANSI/ HI 2.1-2.2-2008 American National Standard for Vertical Pumps for Nomenclature and Definitions

   d. ANSI/HI 3.1-3.5-2008 American National Standard for Rotary Pumps for Nomenclature, Definitions and Operation

   e. ANSI/HI 3.6 American National Standard for Rotary Pump Tests

   f. ANSI/HI 9.6.2 American National Standard for Centrifugal and Vertical Pumps Allowable Nozzle Loads

   g. ANSI/HI 9.6.4-2009 Centrifugal and Vertical Pumps - Vibration Measurements and Allowable Values

   h. ANSI/HI 9.6.6-2009 Rotodynamic Pumps for Pump Piping

   i. ANSI/HI 9.8-1998 American National Standard for Centrifugal and Vertical Pump Intake Design

   j. ANSI/HI 11.6-2001 Submersible Pump Tests

   k. ANSI/HI 12.1-12.6 Rotodynamic Slurry Pump Standard

   l. ANSI/HI 14.6 Rotodynamic Pumps for Hydraulic Performance Acceptance Tests

2. American Society of Mechanical Engineers

   a. ANSI/ASME B73.1 Specifications for Horizontal End Suction Centrifugal Pumps for Chemical Process

3. American Petroleum Institute

   a. ANSI/API Standard 610 Centrifugal Pumps for Petroleum, Petrochemical and Natural Gas Industries

4. American Water Works Association

   a. ANSI/AWWA E103 Standard for Horizontal and Vertical Line-Shaft Pumps

5. American Society for Testing and Materials

a. A36 Specification for Structural Steel

b. A48 Specification for Gray Iron Castings

c. A53 Specification for Pipe, Steel, Black and Hot-Dipped, Zinc-Coated, Welded and Seamless

d. A148 Specification for Steel Castings, High Strength, for Structural Purposes

e. A193 Specification for Alloy Steel and Stainless Steel Bolting Materials for High Temperature Service

f. A276 Specification for Stainless Steel Hot/Cold-Finished Bars

g. A322 Specification for Steel Bars, Alloy, Standard Grades

h. A514 Specification for High Yield Strength, Quenched and Tempered alloy Steel Plate, Suitable for Welding

i. A532 Specification for Abrasion-Resistant Cast Irons

j. A536 Specification for Ductile Iron Castings

k. A565 Specification for Martensitic Stainless Steel Bars

l. A582 Specification for Free-Machining Stainless and Heat-Resisting Steel Bar, Hot-Rolled and Cold-Rolled

m. A743 Specification for Castings, Iron-Chromium, Iron-Chromium-Nickel and Nickel-Base, Corrosion-Resistant for General Application

n. B148 Specification for Aluminum-Bronze Sand Castings

o. B584 Specification for Copper Alloy Sand Castings for General Application

6. American National Standards Institute

a. B16.1 Standard for Cast Iron Pipe Flanges and Flanged Fittings

b. B16.5 Standard for Pipe Flanges and Flanged Fittings

7. ANSI/NFPA 70 National Electric Code

8. Society of Automotive Engineers SAE J404 Chemical Compositions of SAE Alloy Steels

1.04 CONTRACTOR SUBMITTALS

A. Shop Drawings: Shop drawings of all pumps shall include the following information in addition to the requirements of Section 01300, Submittals and Section 11000, Equipment General Provisions.

1. Pump name, identification number and specification number.

2. Performance curve and pump data.

3. Pump hydraulic characteristic curves, efficiencies, required net positive suction head (NPSH), and horsepower curves at pump rotative speeds corresponding to the conditions specified. For variable speed driven pumps, curves shall be submitted at minimum, intermediate and maximum operating speed as well as for operation with the variable speed drive bypassed (across the line). The CONTRACTOR shall require the manufacturer to indicate points on the H/Q curves, and the limits recommended for stable operation between which the pumps may be operated without surge, cavitation, overheating, recirculation, and vibration. The stable operating range shall be as wide as possible based on actual hydraulic and mechanical tests. Motors and drives shall be furnished so that they are non-overloaded throughout the entire stable operating range of the pump. The use of service factors in this determination will not be allowed.

4. Details of shaft sealing system.

5. General cutaway sections, materials, dimension of shaft projections, shaft and keyway dimensions, shaft diameter, dimension between bearings, general dimensions of pump, suction head bolt orientation, design or baseplate, and anchor bolt locations and forces.

6. Electrical data including control and wiring diagrams.

7. Pump drive and motor data in accordance with Division 15, Mechanical and Division 16 Electrical, of these documents.

8. Uncrated weight of the pump, weight of heaviest part of pump.

9. If indicated in the individual pump specification for specific parts, provide foundry certificates and results of Brinnell hardness testing showing compliance to ASTM A 532. Each individual casting shall be Brinnell tested in a minimum of two places, in an area of representative casting thickness to ASTM Method E-10. Results shall be certified by a registered professional Engineer. Test results shall verify the satisfaction of the required Brinnell hardness of the finished product as specified in respective subsections.

10. Where pump and motor speeds are to be regulated by variable speed drives, the CONTRACTOR shall coordinate, furnish and exchange all necessary requirements with the respective equipment manufacturers to ensure compatibility and shall submit pump, motor and variable speed drive shop drawings together as a complete system.

11. Submersible pump submittals shall also include:

    a. Product data sheets for power and control cables and length of cables.

    b. Details on pump guide rail system and mounting requirements.

B. <u>Certification:</u> The CONTRACTOR shall obtain written certification from the pump manufacturer, stating that the equipment will efficiently and thoroughly perform the

required functions in accordance with these Specifications and as indicated on the Drawings, CONTRACTOR shall have unit responsibility for coordination of all equipment, including motors, variable speed drives, controls, and services required for proper installation and operation of the completely assembled and installed pumps. The CONTRACTOR shall submit all such certificates to the ENGINEER.

C. O & M Manuals: Prior to start-up the CONTRACTOR shall furnish complete operations and maintenance manuals in accordance with Section 01300, Submittals and Section 11000, Equipment General Provisions.

D. Spare Parts: The CONTRACTOR shall obtain from the pump manufacturer a set of the specified herein spare parts of all items of each pump, motor, and drive, subject to wear, such as seals, packing, gaskets, nuts, bolts, washers, wear rings, etc., as well as a set of spare bearings. It shall furnish all these parts suitably packaged and labeled with the part number, manufacturer's description, and the associated equipment number described above for tools. Required spare parts shall be as specified in individual section of the specification. If not listed there, then spare parts shall conform to the standards of the proposed supplier.

E. Maintenance: Printed instructions relating to proper maintenance, including lubrication, and parts lists indicating the various parts by name, number, and diagram where necessary, shall be furnished in duplicate with each unit or set of identical units in each pumping station. A recommended spare parts list shall be included.

F. Field Procedures: Instructions for field procedures for erection, adjustments, inspection, and testing shall be provided with the shop drawings.

1.05 QUALITY ASSURANCE

A. Performance Curves: All centrifugal pumps shall have a continuously rising curve. In no case shall the required horsepower at any point on the performance curve exceed the rated horsepower of the motor or drive. Safety factors will not be considered in determining compliance with this requirement.

B. Testing: CONTRACTOR shall be responsible for the coordination of factory and field tests as required in Part 3 of this section.

1.06 MANUFACTURER'S SERVICE REPRESENTATIVE

A. Unless otherwise referenced in the individual equipment specification section, as a minimum the services of the manufacturer's representative shall be provided for a period as stated in the following schedule:

Installation Trip (days)	Operation Trip Days*	Guaranteed Period Trip (days)
2	2	1

B. Any additional time required to achieve successful installation and operation shall be at the expense of the CONTRACTOR.

1.07 CLEANUP

A. After completion of the installation and testing, the CONTRACTOR shall remove all debris from the site, clean all the pumping equipment and controls, and hand over its work in perfect operating condition.

1.08 GUARANTEES, WARRANTIES

A. After completion, the CONTRACTOR shall furnish to the OWNER the manufacturer's written guarantees that the pumping equipment will operate with the published efficiencies, heads, and flow ranges and meet these Specifications. The CONTRACTOR shall also furnish the manufacturer's warranties as published in its literature and as specified in Section 11000, Equipment General Provisions.

PART 2 -- PRODUCTS

2.01 GENERAL

A. Wherever it is specified that a single Supplier shall be responsible for the compatible and successful operation of the various components of any pumping equipment, it shall be understood to mean that the CONTRACTOR shall furnish and install only such pumping equipment as the designated single Supplier will certify is suitable for use with its equipment and with the further understanding that this in no way constitutes a waiver of any specified requirements.

B. All combinations of manufactured equipment which are provided under these Specifications shall be entirely compatible, and the CONTRACTOR shall be responsible for the compatible and successful operation of the various components of the units conforming to specified requirements. Each unit of pumping equipment shall incorporate all basic mechanisms, coupling, electric motor or engine drive and unit mounting. All necessary mountings and appurtenances shall be included.

C. Where two or more units of the same type and/or size of pumping equipment are required, such units shall all be produced by the same manufacturer.

2.02 MATERIALS

A. All materials employed in the pumping equipment shall be suitable for the intended application; material not specifically called for shall be high-grade, standard commercial quality, free from all defects and imperfection that might affect the serviceability of the product for the purpose for which it is intended, and shall conform to the following requirements unless otherwise specified in individual pumping equipment Specifications:

1. Cast iron pump casings and bowls shall be of close-grained gray cast iron, conforming to ASTM A 48, or equal.

2. Bronze pump impellers shall conform to ASTM B584, “G Bronze”.

3. Stainless steel pump shafts shall be of Type 400, Series. Miscellaneous stainless steel parts shall be of Type 316

4. All anchor bolts, nuts and washers shall be Type 316 stainless steel, unless otherwise specified in individual pumping equipment Specifications.

2.03 PUMP APPURTENANCES

A. Nameplates: In addition to the requirements of Section 11000, Equipment General Provisions, nameplate data for each pump shall include the rating in gallons per minute, rated head, speed, and efficiency at the primary design point..

B. Solenoid Valves: Where required, the pump manufacturer shall furnish and install solenoid valves on the water or oil lubrication lines. Solenoid valve electrical rating shall be compatible with the motor control voltage and shall be furnished complete with all necessary conduit and wiring installation from control panel to solenoid.

C. Pressure Gages: The Contractor shall furnish and install pressure gauges on the suction and discharge of each pump, except wet-pit submersible pumps and vertical turbine pumps. The Contractor shall furnish and install pressure gauges on the discharge piping of each wet pit submersible pump and vertical turbine pump in the locations shown on the Drawings or as directed by the Engineer. Pressure gages shall be located in a representative location, where not subject to shock or vibrations, in order to achieve true and accurate readings. Pressure gages shall be furnished under Division 17, Instrumentation, of these documents.

D. Variable Speed Drives: Variable speed drives, drive motors, speed control equipment, and accessories shall be furnished in accordance with Division 16, Electrical, of these documents.

2.04 PUMP REQUIREMENTS - GENERAL

A. Flanges: Suction and discharge flanges shall conform to ASME B16.1 or B16.5 dimensions.

B. Handholes: Handholes on pump casings shall be shaped to follow the contours of the casing to avoid any obstructions in the water passage.

C. Mechanical Seals: Mechanical seal designs shall be selected for highest reliability and for rugged service. Mechanical seals shall be provided where required by the Specifications. Unless the pump manufacturer recommends better seal for a specific application, mechanical seals shall be furnished as specified in individual pumping equipment sections.

D. For all seal arrangements, seals must be flushed by the pumped fluid or externally supplied liquid as indicated by individual pumping equipment specifications or as required by manufacturer, in order to maintain reliable seal performance.

E. All drivers and shafting shall comply with the requirements of Section 01600, “Materials and Equipment” of the specification.

F. Drive shaft and bearing assemblies shall be sized such that critical speed conforms to the following requirements:

1. For constant speed pumps, operating speed shall not be more than 75 percent of critical speed, nor within the range of 44 percent to 56 percent of critical speed for horizontal shafts.

2. For variable speed pumps, full speed shall not be more than 44 percent of critical speed for horizontal shafts or 75 percent of critical speed for vertical shafts.

G. All shafting shall be dynamically balanced in accordance with the recommendations of the shafting manufacturer.

H. Drive shaft dimensions and, where applicable, the location of steady bearing supports are shown approximately to scale on the drawings. Exact dimensions and support arrangements will depend on the motor and pump which the CONTRACTOR proposed to install. The CONTRACTOR shall submit complete shop drawings and Specifications to the ENGINEER for review of the drive shaft arrangement proposed.

I. The drive shaft manufacturer shall furnish to the CONTRACTOR complete installation instructions for the equipment furnished. The CONTRACTOR shall install the drive shaft assemblies per the manufacturer's instructions. The shafts shall be installed with a minimum of one degree offset and a maximum of five degrees offset at each universal joint.

J. The CONTRACTOR shall furnish and install a heavy-duty shaft guard for all drive shafting which is less than seven feet above floor or platform level in accordance with the provisions of Paragraph 1910.210 of OSHA Rules and Regulations. Provision shall be made in the guard as necessary for lubrication and inspection access of the joints and bearings without the necessity of removing the entire guard assembly.

K. The minimum ABMA L10 bearing life for all pump, motor and drive bearings shall be 60,000 hours unless otherwise stated in the individual equipment specification sections.

PART 3 -- EXECUTION

3.01 INSTALLATION

A. General: Pumping equipment shall be installed in accordance with the manufacturer's recommendations, industry accepted practices, acceptable procedures submitted with the shop drawings and as indicated on the Drawings, unless otherwise accepted by the ENGINEER.

B. Alignment: Equipment shall be field tested to verify proper alignment, operation as specified, and freedom from binding, scraping, vibration, shaft runout, or other defects.

Pump drive shafts shall be measured just prior to assembly to ensure correct alignment without forcing. Equipment shall be secure in position and neat in appearance.

C. Lubricants: The installation work shall include furnishing the necessary oil and grease for initial operation.

D. Connections: All motors shall be connected to the conduit system by means of a short section (18-inch minimum) of weatherproof flexible conduit, unless otherwise indicated. For connections for No. 6 AWG and smaller wire size, the CONTRACTOR shall furnish flexible conduit with an acceptable grounding conductor inside the flexible section. For connections of No. 4 AWG or larger wire size, the CONTRACTOR shall install a grounding conduction in the conduit and terminate at the motor control center with an acceptable grounding clamp.

E. Drains: All gland seals, air valves, and drains shall be piped to the nearest floor sink or drain with galvanized steel pipe or copper tube, properly supported with brackets.

3.02 TESTING

A. Factory Testing: The CONTRACTOR shall be responsible for the coordination of the following tests of each pump, drive, and motor. Pump tests shall utilize the actual motors and pump-motor bases to be furnished with the pumping equipment. Use of the pump manufacturers standard test motors is not acceptable. Testing may use the test shop's VFD.

1. General: Tests shall be performed in accordance with the Standards of the Hydraulic Institute, Inc. Tests shall be performed on the actual assembled unit. Prototype model tests will not be acceptable. Pump shop tests shall be made by the manufacturer and certified curves shall be submitted prior to witnessed tests. The shop tests shall consist of standard IEEE tests of motors, operation of the pumps and motors installed on the actual pump and motor bases to be furnished for proper balance of equipment and all other requirements as specified under this section. Pumps motors and drives shall be factory witness tested, as defined herein. All electronic transducers, meters, gauges, and test instruments shall be calibrated within 30 days prior to the scheduled test and certified calibration data shall be provided. Differential pressure type flow meters, such as venturis are preferred and shall have been calibrated, and their accuracy certified within the past 12 months. In case of failure of any unit to meet the test requirements, the manufacturer shall make such alterations as are necessary, and the tests shall be repeated without additional cost to the OWNER until the equipment test is passed.

2. Factory Witnessed Tests: All pumps and motors, 150 horsepower and larger and any smaller pumps, as determined by the ENGINEER, shall be factory-tested as complete, assembled units, as specified above, and witnessed by a representative of the ENGINEER and OWNER. The CONTRACTOR shall give the ENGINEER and OWNER a minimum of two weeks notification prior to the test.

3. Certified Test Data: Factory test results shall be submitted to the ENGINEER in accordance with Section 01300, Submittals. No equipment shall be shipped until the test data is acceptable to the ENGINEER. Acceptance tolerances shall be in

accordance with ANSI/HI 14.6 grade 1E for the design point and grade 3B for other points unless otherwise stated in the individual equipment specification sections. Tests shall include those listed below. The applicable best standard for submersible sump and non-clog pumps shall be ANSI / HI 11-6 Submersible Pump Test.

4. Hydrostatic Tests: Hydrostatic tests should be carried out in accordance with ANSI/ Hydraulic Institute Standard 14.6 at 130% of the rated pressure. Rated pressure shall be the maximum operating suction pressure plus the pump differential pressure at the design point. Pumps with plastic casings shall be tested at 110% of the rated pressure.

5. Hydraulic Performance Test: Test shall be at rated full speed with a minimum of 10 readings between shutoff head and 25-percent above design capacity including the specified operating conditions of head and capacity, recorded on data sheets as defined by the Hydraulic Institute, signed, dated, and certified. Certified pump tests shall be conducted through the specified range of flow vs./head/capacity/efficiency curves plotted at pump design speed prior to connection to variable speed drive control systems (where provided). During each test, the pump shall be run at each head/capacity condition as specified in the pump schedule for sufficient time to accurately determine and record capacity, head, pump speed, drawn horsepower, pump efficiency and motor efficiency. Where the pump application requires variable speed, the above tests shall be repeated at 90 percent, 80 percent and 65 percent of full speed. A minimum of 5 readings are required at each test speed.

6. NPSH Tests: Where required by the individual equipment specification sections, NPSH tests shall be conducted to demonstrate satisfactory operation with the specified available NPSH.

B. Field Tests: All pumping units shall be field tested after installation, in accordance with the Contract Documents, to demonstrate satisfactory operation, without causing excessive noise, vibration, cavitation, and overheating of the bearings. The field testing shall be performed in the presence of an experienced field representative of the manufacturer of each major item of equipment, who shall supervise the following tasks and shall certify in writing that the equipment and controls have been properly installed, aligned, lubricated, adjusted, and readied for operation:

1. Start-up: Start-up, check, and operate the equipment over the entire speed range. The vibration shall be within the amplitude limits recommended in the Hydraulic Institute Standards and it shall be recorded at a minimum of four pumping conditions defined by the ENGINEER.

2. Performance: Pump performance shall be documented by obtaining concurrent readings, showing motor voltage, amperage, pump suction head, and pump discharge head, for at least four pumping conditions at each pump rpm. Each power lead to the motor shall be checked for proper current balance. Flow shall be measured to the extent possible by permanently installed instrumentation or drawdown measurement.

3 Bearing Temperatures: Bearing temperatures shall be determined by a contact-type thermometer. A running time of at least 20 minutes shall be maintained for this test, unless liquid volume available is insufficient for a complete test.

4. Natural-Frequency: Natural frequency testing of each installed vertical turbine pump assembly using the “bump test” method.

5. Vibration: Operate the equipment over the entire speed range. The vibration shall be within the limits of ANSI/HI 9.6.4 for field testing and it shall be recorded at a minimum of 4 pumping conditions defined by the OWNER’s representative.

6. Certification: The field testing shall be witnessed by the OWNER or its representative. The CONTRACTOR shall submit to the ENGINEER a written notification of all pump field tests a minimum of one week prior to testing. In the event any of the pumping equipment fails to meet the above test requirements, it shall be modified and retested in accordance with the requirements of these Specifications. The CONTRACTOR shall then certify in writing that the equipment has been satisfactorily tested, and that all final adjustments thereto have been made. Certification shall include date of final acceptance test, as well as a listing of all persons present during tests, and resulting test data. The costs of all Work performed in this Paragraph by factory-trained representatives shall be borne by the CONTRACTOR.

7. Acceptance: In the event of failure of any pump to meet any of the above requirements or efficiencies, the CONTRACTOR shall make all necessary modifications, repairs, or replacements to conform to the requirements of the Contract Documents and the pump shall be re-tested at no additional compensation, until found satisfactory.

3.03 PAINTING

A. Painting shall be in accordance with Section 09900 – Painting and Section 11000 - Equipment General Provisions.

- END OF SECTION -

SECTION 11200 - HORIZONTAL SPLIT CASE PUMPS

PART 1 -- GENERAL

1.01 THE REQUIREMENT

A. The Contractor shall furnish and install all tools, supplies, materials, equipment, and labor necessary for the installation, testing, and placing into operation of all horizontal split case pumps and appurtenances, complete and operable, all in accordance with the requirements of the Contract Documents.

B. The pump supplier shall include, in his bid, time, labor, materials and tools required for installation assistance, testing and start-up with the Contractor.

C. The pump supplier shall have unit responsibility for coordinating the proper pump mounting system with the Contractor to ensure stable pump operation free from abnormal vibration.

D. Horizontal split case pumps shall be provided in accordance with the requirements of Section 11000 – Equipment General Provisions and Section 11100, Pumps, General.

1.02 RELATED WORK SPECIFIED ELSEWHERE

A. Section 01300 – Submittals

B. Section 01600 – Materials and Equipment

C. Section 01660 – Equipment Testing and Plant Startup

D. Section 11000 – Equipment General Provisions

E. Section 11100 – Pumps, General

F. Section 15170 – Low Voltage Electric Motors

G. Division 16 – Electrical

H. Division 17 – Instrumentation

1.03 SUBMITTALS

A. Shop Drawings and Operation and Maintenance Manuals shall be submitted in accordance with Section 01300 – Submittals, Section 11000 – Equipment General Provisions, and Section 11100 – Pumps, General. The following additional items shall also be submitted:

1. Performance Affidavit

2. Manufacturer's literature, data sheets, fabrication information, installation instructions, assembly views.

3. Complete lubrication instructions and lubricant schedule, including manufacturer's recommended lubricant. All lubricants shall be food grade, NSF 61 approved. Schedule shall include frequency of lubricant application, type of lubricant, and instructions regarding lubricant application.

4. Provide weight of entire pump assembly, including motor and base weight of individual major subassemblies.

5. Shaft deflection calculation under the most severe specified operating condition.

6. Pump manufacture shall certify a Minimum Continuous Stable Flow (MCSF) rating at maximum speed that is lower than the specified minimum operating flow.

7. All materials in contact with potable water shall comply with NSF International standard 61: Drinking Water System Components – Health Effects. The shop drawing shall certify compliance with this standard.

8. All materials in contact with potable water shall comply with NSF International standard 372: Drinking Water System Components – Lead Content. The shop drawing shall certify compliance with this standard.

B. Submit results of factory tests, field tests, and start up reports.

1.04 WARRANTY AND GUARANTEE

A. Warranty and guarantee shall be for as specified in Section 11000.

1.05 DEFINITIONS

A. Terms shall be as defined in ANSI / HI 1.1-1.2-2014 Centrifugal Nomenclature.

PART 2 – PRODUCTS

2.01 ACCEPTABLE MANUFACTURERS

A. Manufacturer shall have a minimum of 10 years of experience of producing substantially similar equipment and shall be able to show evidence of at least 5 installations in satisfactory operation for at least 5 years in the continental United States.

B. Horizontal split case pumps shall be as manufactured by:

Manufacturer	Model
Paco	KP 1015-3/4
Goulds	3410L 10x12x17

C. All pumps supplied on this project shall be the products of a single manufacturer and supplied by a single supplier.

D. The electric motor shall be provided by the pump manufacturer and shall be one of the named manufacturers specified in Section 15170.

2.02 GENERAL

A. All equipment for the pumps, including motors and bases, shall be provided as a complete unit by the pump manufacturer, NO EXCEPTIONS.

B. All pumps for same pumping application shall be provided by one manufacturer.

2.03 PERFORMANCE REQUIREMENTS

A. When operating at the maximum output speed each pump shall have a characteristic performance curve which meets all the minimum conditions listed in the pump schedule. The pumps and drive motors shall be capable of operating satisfactorily under the full-range of speed, flow and pressure conditions as defined by the pump schedule. Pump efficiency as defined herein shall include all mechanical losses from bearings and shaft seals.

B. The impeller diameter required for the specified operating conditions shall not exceed 95% of the maximum impeller diameter of the pump provided to allow increased duty for future conditions.

C. Each pumping unit and its driving equipment shall be designed and constructed to withstand the maximum turbine run-away speed of the unit due to backflow through the pump with the primary TDH specified available at the pump discharge flange. Maximum reverse run-away speed shall not exceed 130 percent of the design operating speed.

D. Design operating point flow shall be between 85 to 98 percent of best efficiency point.

E. Pump manufacture shall certify a Minimum Continuous Stable Flow (MCSF) rating at maximum speed that is lower than the specified minimum operating flow.

F. Pump Operating Conditions

Description	**High Service Pumps**
Pump Identification Numbers	HSP-0651 HSP-0652 HSP-0653 HSP-0654
Number of Units	4
Maximum Pump Operating Speed (rpm)	1,800
Primary Operating Point (Design Point) (at maximum pump speed): a. Flow (gpm) b. Total Head (feet)	 4,500 175

Description	High Service Pumps
c. Minimum Pump Efficiency (%)	83
Secondary Operating Point (at maximum pump speed): a. Flow (gpm) b. Total Head (feet) c. Minimum Pump Efficiency (%)	 5,500 150 80
Maximum Allowable NPSH Required at Primary Operating Point at centerline of impeller (feet)	22.0
Shut Off Head (feet) (at maximum pump speed)	220
Minimum Operating Flow (gpm) (at maximum pump speed)	2,610
Power Supply	480 Volt, 3-phase, 60 Hz
Fluid Pumped	Drinking Water
Fluid Temperature (degrees F)	70 to 95
Fluid Specific Gravity at 85 degrees F	0.9955
Fluid pH range	8.0 to 9.5
Fluid Viscosity (absolute centipoises at 60 degrees F)	0.764
Pump Rotation	As Indicated on the Drawings

E. Pump Dimensions

Dimension Description	High Service Pumps
Pump Discharge Flange Size (inches nominal diameter)	10
Pump Suction Flange Size (inches nominal diameter)	12

2.03 PUMP CASING

A. The pump casing shall consist of upper and lower halves with a bolted, machined axial joint between them requiring a gasket of not more than 0.015 inch in thickness. The lower half shall incorporate the integrally cast suction and discharge nozzles such that the upper half can be removed for maintenance without disturbing piping connections or pump driver.

B. Discharge nozzle shall be oriented horizontally and the suction nozzle shall be oriented horizontally opposite the discharge nozzle.

C. Casing shall be cast of the specified material and be designed for the specified casing working pressure equal to maximum suction pressure plus pump shutoff head at maximum speed. Casing shall be hydrostatically tested at 1.5 times working pressure.

D. Nozzle flanges shall be drilled for bolt hole and bolt circle layout conforming to ASME B16.1, Class 125. Flanges shall be designed for straight through nut and bolt flange connections to piping. Flange faces shall be machined flat.

E. Casing shall incorporate integrally cast discharge volute and suction passages. Volute design shall be dual volute type. Water passages shall not be lined or coated.

F. Casing shall incorporate shaft seal stuffing boxes integral with the casing halves or as separate components. Separate stuffing boxes shall have a rabbeted fit and be bolted and sealed to the casing.

G. Lower casing shall incorporate integral or fully registered bolt-on bearing supports and integral mounting legs and feet.

H. Lifting points shall be incorporated on the upper casing half for its removal.

I. Provide the following connections on the casing:

Connection	**High Service Pumps**
Upper Casing Vent	1-1/2 – inch NPT
Casing Drain	1 – inch NPT
Suction End of Pump for Pressure Gauge	1/2 - inch NPT
Discharge End of Pump for Pressure Gauge	1/2 - inch NPT
Casing Volute Seal Flush (2)	1/2 – inch NPT
Stuffing Box Seal Flush (2)	1/2 – inch NPT

2.04 MECHANICAL SEAL

A. Pump casing shall include two stuffing boxes, each fitted with cartridge mechanical seals. Mechanical seals shall be single, inside, balanced stationary pusher type with carbon vs. silicon carbide sealing faces.

B. Mechanical seal metallic components shall be Type 316 stainless steel and elastomers shall be EDPM.

C. Mechanical seals shall be product water lubricated as per API Piping Plan 11. A flushing water connection shall be provided to each stuffing box from the discharge volute passage in the upper casing half. Flush lines shall be of Type 316 stainless steel construction.

D. Mechanical seals shall be as manufactured by Chesterton, Flowserve or John Crane.

2.05 SHAFTS

A. Shafting shall be of the specified material polished over its full length of sufficiently large diameter to safely transmit the maximum torque developed by the drive unit, to allow no more than 0.003 inch maximum deflection at the stuffing boxes for all normal performance conditions on the curve, to prevent excessive vibration and to produce bending stresses below the fatigue limit of the shaft material in all parts of the shaft.

B. Shaft runout at the stuffing boxes shall not exceed 0.002 inch total indicator reading.

C. Shafting shall comply with the rotating assembly resonant frequency requirements of the section entitled “Pumps, General”.

D. Keyways shall be machined at the driver coupling end and at the impeller. Shaft shall have a reversible design suitable for either right- or left-hand pump rotation configuration.

2.06 SHAFT SLEEVES

A. Pump shaft shall be protected from the impeller through the stuffing boxes by removable shaft sleeves. Shaft sleeves shall be constructed of hardened Type 316 stainless steel. Seals shall be provided between sleeves, impeller hub and sleeve nuts to prevent leakage under the sleeve.

B. Sleeve nuts threaded on the shaft shall accurately position the impeller on the shaft. Sleeves shall be secured to prevent loosening during reverse rotation.

2.07 COUPLING

A. A flexible coupling shall be provided between the pump shaft and driver and keyed to pump and driver shafts.

B. Pumps shall be furnished with OSHA compliant coupling guards. Coupling guards shall be painted steel. The design of the guard shall permit access to oil or grease fittings at pump or motor bearings without the removal of the coupling guard.

C. Flexible couplings shall be elastomeric sleeve type as manufactured by Dodge or T.B. Woods or steel grid couplings as manufactured by Falk.

2.08 IMPELLER

A. Pump impeller shall be of the double suction, Francis vane enclosed type made of the material listed in the subsection on “Pump Materials of Construction”. Impeller shall have a minimum of five vanes. Impeller shall be cast in one piece and completely machined on the exterior surface. Impellers shall be keyed to the shaft and fixed axially along the shaft by shaft sleeves and nuts. The periphery of the impeller suction eyes shall be machined for installation of impeller wear rings.

B. The rotating assembly consisting of shaft, impeller, key(s), sleeves and sleeve nuts shall be dynamically balanced in two planes. Balance quality grade shall be ISO 1940-1 G2.5.

2.09 WEAR RINGS

A. The opposing surfaces of the impeller and casing at each impeller eye shall be fitted with replaceable wear rings.

B. Casing wear rings shall be pinned to the lower casing half to prevent movement. Impeller wear rings shall be shrink fitted on the impeller and locked with set screw or dowel pin.

C. Wear rings shall be constructed of materials that are galvanically compatible with the casing and impeller materials and resistant to corrosion and erosion by the pumped fluid.

2.10 BEARINGS

A. The weight of the pump rotating assembly and unbalanced hydraulic forces shall be carried by bearings at each end of the pump shaft. The radial bearing (inboard bearing) at the drive end of the shaft shall be a deep groove ball bearing and the thrust bearing (outboard bearing) at the non-drive end of the shaft shall be a duplex angular contact ball bearing. Bearings shall be press fit and positioned onto ground journals at both ends of the shaft. Bearings shall be grease lubricated.

B. Bearings shall be designed for an ABMA L10 life of 100,000 hours or more at the maximum shaft speed within any point in the specified operating range without the aid of external cooling systems.

C. The bearing housings shall be constructed of cast iron, ASTM A48, Class 30 and designed to provide a fully enclosed bearing housing with seals to prevent lubricant contamination. Housings shall incorporate seal leakage catch basin with tapped drain ports and provisions to renew bearing lubricant. Bearing housing supports shall be integral with the lower casing half or fully registered bolt-on type.

2.11 PUMP AND DRIVE BASE

A. Each pump and motor shall be mounted on a common base. The base shall be fabricated from steel structural shapes and plate and designed to rigidly support the

weight and resist operating forces of both pump and motor, including nozzle loads imposed by piping.

B. Pump and motor shall be bolted to machined steel pads on the base specifically designed for pump casing and motor frame for each application.

C. Base shall incorporate grout holes.

D. Base shall be bolted and grouted to the foundation. Pump manufacturer shall furnish anchor bolt layout and sizing.

E. Drip pans shall include drain connections. CONTRACTOR shall provide 1-inch sch. 80 PVC piping from base drain connects to the pipe trench.

F. Base shall include an electrical grounding lug.

2.12 PUMP MATERIALS OF CONSTRUCTION

A. Materials of construction shall conform to the requirements listed below and the section entitled “Pumps, General”.

Component	Material
Casing	Cast Iron A48 Class 30
Impeller	Nickel Aluminum Bronze B148 alloy C95500, dynamically balanced
Shaft	Alloy Steel A434 GR 4140
Shaft Sleeves	Stainless steel A743 Grade CF-8M
Shaft Sleeve Nuts	Stainless steel A743 Grade CF-8M
Wear Rings - Casing	Nickel Aluminum Bronze B148 alloy C95800
Wear Rings - Impeller	Nickel Aluminum Bronze B148 alloy C95800
Bearing Housings	Cast Iron A48
Fasteners - Wetted	Stainless Steel Type 316

2.13 MOTORS AND DRIVES

A. The motor for the pump shall be of the horizontal, squirrel cage induction type in accordance with Section 15170 - Electric Motors, unless specifically modified herein. The maximum speed and horsepower of each motor shall be as specified. The rated horsepower shall be such that the motors will not be overloaded nor the motor

nameplate horsepower exceeded when the pumps are operated at any point on the pump performance curve.

B. Motors shall be specifically designed for operation with variable frequency drive speed controls as specified in Section 16495 - Variable Frequency Drives.

C. Motor Data

Motor Data	High Service Pumps
Type	Direct Coupled – Horizontal
Horsepower	300 HP
Voltage	460 V
Phase	3
Frequency	60 Hz
Maximum Speed	1,800 rpm
Minimum Reduced Speed	70%
Enclosure Type	TEFC
Inverter Duty	Yes
Winding Thermal Protection	Thermostats
Motor Speed Control	Variable Frequency Drive
Maximum Sound at 3 feet	80 dBA
Space Heaters	Yes, 120 V, single phase

D. Thrust bearings and guide bearings shall be grease or oil lubricated. Bearings shall have a minimum ABMA L10 life as specified in the section title “Electric Motors”.

E. After delivery and until substantial completion, all pump shafts shall be rotated weekly in the presence of the Engineer.

2.14 SPECIAL TOOLS AND SPARE PARTS

A. Provide in accordance with Section 11100 – Equipment General Provisions and Section 11100 – Pumps, General.

B. Provide the following spare parts:

Quantity	Description

Two (2) sets	Impeller wear rings
Two (2) sets	Casing wear rings
Two (2) sets	Inboard bearings
Two (2) sets	Outboard bearings
Four (4)	Casing gasket
Two (2)	Shaft coupling grid or sleeve
Two (2) sets	Shaft Sleeves and O-rings
Two (2) sets	Mechanical Seals
One year	One year supply of lubricant for all pumps

C. Pack spare parts in wooden boxes; label with manufacturer's name and local representative's name, address, and telephone number; and attach list of materials contained therein.

PART 3 – EXECUTION

3.01 INSTALLATION

A. Contractor shall install pumps according to manufacturer's recommendations and as shown on the Drawings.

B. General installation requirements shall be as specified in Section 11100 - Pumps, General, and Section 01600 - Materials and Equipment and Section 11000 - Equipment General.

C. Contractor shall have unit responsibility for the proper coordination, sizing, and installation of the pump foundation / mounting requirements based on the manufacturer's recommendations, subject to Engineer's review and comment.

3.02 MANUFACTURER'S FIELD SERVICES

A. The CONTRACTOR shall furnish the services of a qualified manufacturer's technical representative in accordance Section 01600 - Materials and Equipment and Section 11100 - Pumps, General and for a period of not less than four (4) days as follows:

1. At least one (1) trip of two (2) days to check and supervise the equipment installation, supervise start-up, and supervise testing and adjustments of the equipment.

2. At least one (1) trip of one (1) day to supervise initial start-up and operation and to instruct the OWNER's personnel in proper operation and maintenance of the equipment.

3. At least one (1) trip of one (1) day to assist the OWNER during the guarantee period.

3.03 SHIPPING AND HANDLING

A. Shipping and handling requirements shall be as specified in Section 01600 - Materials and Equipment.

B. Factory assembled parts and components shall not be dismantled for shipment unless permission is received in writing from the Engineer.

C. Machined surfaces of all exposed pump openings or other exposed unpainted surfaces shall be protected by wooden blanks or Cosmoline, as appropriate, strongly built and securely bolted thereto.

D. After hydrostatic or other tests, all entrapped water shall be drained prior to shipment, and proper care shall be taken to protect parts from the entrance of water during shipment, storage and handling.

3.04 PUMP TESTS

A. Motor Tests: Motors shall be shop tested and field tested per Section 15170 - Low Voltage Electric Motors.

B. Pump Tests: Each pump shall be tested in the factory in accordance with Section 11100 – Pumps, General.

C. Field Tests: Contractor shall perform field tests on the completed pump installation in accordance with Section 11100 – Pumps, General.

D. Vibration Testing: Vibrations testing shall be performed on each pump in accordance with Section 11000 – Equipment General Provisions.

E. Alignment Testing: Alignment testing shall be performed on each pump in accordance with Section 11000 – Equipment General Provisions.

F. After the pump manufacturer's representative has determined the pump installation is correct and the pumps are ready for continuous use, Contractor shall test operate the pumps under actual operating conditions for the next twenty-one days.

3.05 PAINTING

A. The pumps, baseplates and motors shall be shipped to the site with factory applied prime coating (unless the baseplate is furnished by the pump supplier or the baseplate provided is stainless steel). All shop coatings shall be compatible with proposed field applied finish coatings as described in Section 09900 – Painting.

B. The CONTRACTOR shall finish coat the pumps, baseplates and motors as described in Section 09900 – Painting.

C. Mating surfaces or mounting flanges shall not be coated.

- END OF SECTION -

SECTION 11208 - SUMP PUMPS

PART 1 - GENERAL

1.01 THE REQUIREMENT

A. Furnish all labor, equipment, and materials for construction of sump pumping systems as shown on the Drawings and specified herein.

1.02 RELATED WORK SPECIFIED ELSEWHERE

A. Section 01300 – Submittals

B. Section 01600 – Materials and Equipment

C. Division 16 – Electrical

1.03 SUBMITTALS

A. Submit shop drawings, pump curves and manufacturer's product literature as specified under Section 01300 - Submittals.

PART 2 - PRODUCTS

2.01 SUMP PUMPS

A. Acceptable Manufacture: Grundfos, Little Giant, or equal.

B. Type: Completely submersible vertical centrifugal sump pumps.

C. Starting and Stopping Method: See the section in this specification titled, "CONDITIONS OF SERVICE" for a schedule that indicates the starting and stopping method for the pumps supplied.

1. When "manual:" starting and stopping is scheduled: Furnish and install a local hand switch to start and stop the sump pump. Local hand switch shall be motor rated switch with NEMA 4X 316 stainless steel enclosure.

2. When "float switch" starting and stopping is scheduled: The sump pump shall be furnished with an integral float switch to start and stop the sump pump. Cables between float switch and pump shall be prewired to the pump.

D. Power Cord: Twenty-five (25) foot submersible power cord, cut to length and terminated in field. Provide appropriate plug as needed.

E. Electrical Data: The pump motor shall be designed for the following:

1. Voltage: 115 volt

2. Frequency: 60 Hertz.

3. Phase: 1

4. Running Amps: 8.0

5. Motor Horsepower: 0.5

6. Motor Speed: 3,350 RPM

7. Motors shall be furnished with integral starter and overload protection.

F. Pumps shall be capable of running dry without damage to components.

G. Conditions of Service:

Location	Equipment Tag No.	Manufacturer and Model	Starting and Stopping Method	No. Required	Discharge Size (inches FNPT)	Capacity GPM	Total Dynamic Head (ft)
Flow Meter Vault	SUMP0641	Grundfos Model AP12, or equal	Float Switch	1	1 ½	60	10

PART 3 -- EXECUTION

3.01 INSTALLATION

A. Installation shall be in accordance with the manufacturer's instructions.

- END OF SECTION -

SECTION 15000 - BASIC MECHANICAL REQUIREMENTS

PART 1 -- GENERAL

1.01 THE REQUIREMENT

A. The Contractor shall furnish and install to the required line and grade, all piping together with all fittings and appurtenances, required for a complete installation. All piping located outside the face of structures or building foundations and all piping embedded in concrete within a structure or foundation shall be considered exterior piping.

B. The Contractor shall furnish and install fittings, couplings, connections, sleeves, adapters, harness rods and closure pieces as required to connect pipelines of dissimilar materials and/or sizes herein included under this Section and other concurrent Contracts for a complete installation.

C. The Contractor shall furnish all labor, materials, equipment, tools, and services required for the furnishing, installation and testing of all piping as shown on the Drawings, specified in this Section and required for the Work. Piping shall be furnished and installed of the material, sizes, classes, and at the locations shown on the Drawings and/or designated in this Section. Piping shall include all fittings, adapter pieces, couplings, closure pieces, harnessing rods, hardware, bolts, gaskets, wall sleeves, wall pipes, hangers, supports, and other associated appurtenances for required connections to equipment, valves, or structures for a complete installation.

D. Piping assemblies under 4-inch size shall be generally supported on walls and ceilings, unless otherwise shown on the Drawings or ordered by the Engineer, being kept clear of openings and positioned above "headroom" space. Where practical, such piping shall be run in neat clusters, plumb and level along walls, and parallel to overhead beams.

E. The Contractor shall provide taps on piping where required or shown on the Drawings. Where pipe or fitting wall thicknesses are insufficient to provide the required number of threads, a boss or pipe saddle shall be installed.

F. The work shall include, but not be limited to, the following:

1. Connections to existing pipelines.

2. Test excavations necessary to locate or verify existing pipe and appurtenances.

3. Installation of all new pipe and materials required for a complete installation.

4. Cleaning, testing and disinfecting as required.

1.02 RELATED WORK SPECIFIED ELSEWHERE

A. Division 1, General Requirements

B. Division 2, Sitework

C. Division 9, Finishes

D. Division 11, Equipment

E. Division 16, Electrical

1.03 MATERIAL CERTIFICATION AND SHOP DRAWINGS

A. The Contractor shall furnish to the OWNER (through the Engineer) a Material Certification stating that the pipe materials and specials furnished under this Section conform to all applicable provisions of the corresponding Specifications. Specifically, the Certification shall state compliance with the applicable standards (ASTM, AWWA, etc.) for fabrication and testing.

B. Shop Drawings for major piping (2-inches in diameter and greater) shall be prepared and submitted in accordance with Section 01300 – Submittals. In addition to the requirements of Section 01300 – Submittals, the Contractor shall submit laying schedules and detailed Drawings in plan and profile for all piping as specified and shown on the Drawings.

C. Shop Drawings shall include, but not be limited to, complete piping layout, pipe material, sizes, class, locations, necessary dimensions, elevations, supports, hanger details, pipe joints, and the details of fittings including methods of joint restraint. No fabrication or installation shall begin until Shop Drawings are approved by the Engineer.

PART 2 -- PRODUCTS

2.01 GENERAL

A. All specials and every length of pipe shall be marked with the manufacturer's name or trademark, size, class, and the date of manufacture. Special care in handling shall be exercised during delivery, distribution, and storage of pipe to avoid damage and unnecessary stresses. Damaged pipe will be rejected and shall be replaced at the Contractor's expense. Pipe and specials stored prior to use shall be stored in such a manner as to keep the interior free from dirt and foreign matter.

B. Testing of pipe before installation shall be as described in the corresponding ASTM or AWWA Specifications and in the applicable standard specifications listed in the following sections. Testing after the pipe is installed shall be as specified in Section 3.09.

C. Joints in piping shall be of the type as specified in the appropriate Piping System Schedule in Section 15390, Schedules.

D. ALL BURIED EXTERIOR PIPING SHALL HAVE RESTRAINED JOINTS FOR THRUST PROTECTION UNLESS OTHERWISE SPECIFIED OR SHOWN ON THE DRAWINGS. ALL EXPOSED EXTERIOR PIPING SHALL HAVE FLANGED JOINTS, UNLESS OTHERWISE SPECIFIED OR SHOWN ON THE DRAWINGS.

E. The Drawings indicate work affecting existing piping and appurtenances. The Contractor shall excavate test pits as required of all connections and crossings which may affect the Contractor's work prior to ordering pipe and fittings to determine sufficient information for ordering materials. The Contractor shall take whatever measurements that are required to complete the work as shown or specified.

2.02 WALL PIPES

A. Where wall sleeves or wall pipes occur in walls that are continuously wet on one or both sides, they shall have water stop flanges at the center of the casting or as shown on the Drawings. Ends of wall pipes shall be flange, mechanical joint, plain end, or bell as shown on the Drawings, or as required for connection to the piping. Wall pipes shall be of the same material as the piping that they are connected to. If welded waterstop flanges are employed, welds shall be 360 degree continuous on both sides of flange. Unless otherwise shown on the Drawings, waterstop flanges shall conform to the minimum dimensions shown below:

Pipe Size	Waterstop Flange Diameter	Waterstop Flange Thickness
4" - 12"	OD + 3.10"	0.50"
14" - 24"	OD + 4.15"	0.75"
30" - 36"	OD + 4.50"	1.00"
42" - 48"	OD + 5.00"	1.25"
54"	OD + 5.90"	1.50"

2.03 SLEEVES

A. Unless shown otherwise, all piping passing through walls and floors shall be installed in sleeves or wall castings accurately located before concrete is poured, or placed in position during construction of masonry walls. Sleeves passing through floors shall extend from the bottom of the floor to a point 3 inches above the finished floor, unless shown otherwise. Water stop flanges are required on all sleeves located in floors or walls which are continually wet or under hydrostatic pressure on one or both sides of the floor or wall.

B. Sleeves shall be cast iron, black steel pipe, or fabricated steel in accordance with details shown on the Drawings. If not shown on the Drawings, the Contractor shall submit to the Engineer the details of sleeves he proposes to install; and no fabrication or installation thereof shall take place until the Engineer's approval is obtained. Steel sleeves shall be fabricated of structural steel plate in accordance with the standards and procedures of

AISC and AWS. Steel sleeve surfaces shall receive a commercial sandblast cleaning and then be shop painted in accordance with Section 09900 – Painting.

C. When shown on the Drawings or otherwise required, the annular space between the installed piping and sleeve shall be completely sealed against a maximum hydrostatic pressure of 20 psig. Seals shall be mechanically interlocked, solid rubber links, trade name "Link-Seal", as manufactured by the Thunderline Corp., Wayne, Michigan, or equal. Rubber link, seal-type, size, and installation thereof, shall be in strict accordance with the manufacturer's recommendations. For non-fire rated walls and floors, pressure plate shall be glass reinforced nylon plastic with EPDM rubber seal and 304 stainless steel bolts and nuts. For fire rated walls and floors, two independent seals shall be provided consisting of low carbon steel, zinc galvanized pressure plates, silicon rubber seals and low carbon steel, zinc galvanized bolts and nuts.

D. Cast iron mechanical joint adapter sleeves shall be Clow # 1429, as manufactured by the Clow Corp., or equal. Mechanical joint adapter sleeves shall be provided with suitable gasket, follower ring, and bolts to effect a proper seal. In general, sleeves installed in walls, floors, or roofs against one side of which will develop a hydrostatic pressure, or through which leakage of liquid will occur, shall be so sealed. If welded waterstop flanges are employed, welds shall be 360 degree continuous on both sides of flange.

2.04 SOLID SLEEVE COUPLINGS

A. Solid sleeve couplings shall be used to connect buried service piping where shown on the Drawings. Solid sleeves shall be ductile iron, long body and shall conform to the requirements of ANSI A21.10 (AWWA C110). Unless otherwise shown or specified, solid sleeve couplings shall be Style A11760 as manufactured by American Cast Iron Pipe Co., or equal.

2.05 FLEXIBLE COUPLINGS

A. Flexible couplings shall be as manufactured by the Red Valve Company and shall consist of a molded reinforced fabric of cotton and natural rubber. Galvanized steel retaining rings shall be furnished. End connections shall match ANSI 125 pound flanges with a minimum pressure rating of 140 psi.

2.06 SLEEVE TYPE COUPLINGS

A. Sleeve type, flexible couplings shall be furnished and installed where shown on the Drawings or otherwise required to resist internal operating pressures. In addition to that specified herein, harnessed, sleeve type flexible couplings shall be provided on all exposed pipe 3 inches and larger in diameter that spans any expansion joint in a building or structure.

B. Materials shall be of high strength steel and couplings shall be rated for the same pressures as the connecting piping.

C. Gaskets shall be rubber. Bolts and nuts shall be alloy steel, corrosion-resistant and prime coated.

D. Couplings shall be shop primed with a premium quality primer compatible with the painting system specified in Section 09900 - Painting. Field painting of wetted area shall be done prior to installation.

E. Harnessing

1. Harness couplings to adjacent flanges as shown, specified or otherwise required to restrain all pressure piping.

2. Dimensions, sizes, spacing and materials for lugs, tie rods, washers, and nuts shall conform to the standards for the pipe size, and design pressure specified.

3. No less than two (2) bolts shall be furnished for each coupling.

4. Tie bolts, nuts and washers shall be ASTM A 193, Grade B7 steel or better.

5. Harness rods shall have lengths less than 10 feet between adjacent flanged joints on fittings and shall be coated in accordance with Section 09900 – Painting.

F. Couplings shall be as manufactured by Dresser Industries, Style 38, or equal as required and shown on the Drawings. All couplings shall be provided without interior pipe stop.

2.07 FLANGED ADAPTERS

A. Flanged adapters shall be furnished as required and as shown on the Drawings.

B. All flanged adapters, 12 inches in diameter and smaller, except as shown on the Drawings or directed by the Engineer, shall be locking type flanged adapters.

C. Pressure and service shall be the same as connected piping.

D. Materials shall be cast iron for pipes up to 12 inch diameter and high strength steel for pipes larger than 12 inch diameter.

E. Flanged adapters shall be shop primed with a premium quality primer compatible with the paint system specified in Section 09900 – Painting. Field painting of wetted area shall be done prior to installation.

F. Bolts and nuts shall be alloy steel, corrosion-resistant and prime coated.

G. Flanged coupling adapters larger than 12 inches in diameter shall be harnessed by tying the adapter to the nearest pipe joint flange using threaded rods and rod tabs. The threaded rods and rod tabs shall be as shown on the Drawings.

H. Flanged adapters shall be as manufactured by Dresser Industries, Style 127 or 128, Smith Blair Corporation, or equal.

2.08 MECHANICAL COUPLINGS (SPLIT TYPE - SHOULDERED END)

A. Mechanical couplings (split type-shouldered end) shall be furnished as specified or shown on the Drawings.

B. Materials shall be of malleable iron and couplings shall be rated for the same pressures as the connecting piping.

C. Gaskets shall be rubber. Bolts and nuts shall be heat treated carbon steel track bolts and shall be plated.

D. After installation, buried couplings shall receive two heavy coats of an approved coal tar which is compatible with the finish of the coupling. Exposed couplings shall be painted in accordance with Section 09900 - Painting.

E. Couplings shall be as manufactured by Victaulic Company of America, Style 44, or equal.

2.09 DISMANTLING JOINTS

A. Furnish and install dismantling joints where shown on the Drawings. All dismantling joints shall be restrained type.

B. Gaskets: Gaskets shall be EPDM.

C. Nuts and Bolts: Manufacturer's standard materials.

D. Flange Class: Furnish dismantling joints suitable for AWWA Class D flanges unless indicated otherwise on the Drawings.

E. Factory Coatings: Fusion bonded epoxy, NSF 61 certified.

F. Manufacturer shall be Model 975 by Smith-Blair, Inc. Or Equal:

2.10 TAPPING SLEEVES AND TAPPING SADDLES

A. Tapping sleeves shall be similar to Mueller Outlet Seal, American Uniseal or Kennedy Square Seal. All sleeves shall have a minimum working pressure of 150 psi. All sleeves larger than twelve (12) inches shall be ductile iron. All taps shall be machine drilled; no burned taps will be allowed.

B. Tapping saddles may be used on mains sixteen (16) inches and larger where the required tap size does not exceed one-half the size of the main (i.e. 8-inch tapping saddle for use on a 16-inch main). Tapping saddles shall be manufactured of ductile iron providing a factor of safety of at least 2.5 at a working pressure of 250 psi. Saddles shall be equipped

with a standard AWWA C-110-77 flange connection on the branch. Sealing gaskets shall be "O" ring type, high quality molded rubber having an approximate seventy durometer hardness, placed into a groove on the curved surface of the tapping saddles. Straps shall be of alloy steel. The tapping saddle shall be the American tapping saddle, U.S. Pipe tapping saddle, or equal. All taps shall be machine cut, no burned taps will be allowed.

2.11 UNIONS

A. For ductile iron, carbon steel, and grey cast iron pipes assembled with threaded joints and malleable iron fittings, unions shall conform to ANSI B16.39.

B. For copper piping, unions shall have ground joints and conform to ANSI B16.18.

C. For PVC and CPVC piping, unions shall be socket weld type with Viton O-ring.

2.12 THERMOPLASTIC TUBING AND FITTINGS

A. Thermoplastic tubing shall be manufactured from polyallomor tubing. Tubing shall be protected from ultraviolet radiation degradation with a black coating or integral color conforming to ASTM D-1248, Type 1, Class C, Category 3. Fittings and connectors used with thermoplastic tubing shall be the flareless tube type constructed of brass conforming to SAE CA377, SAE CA360 or equal. Brass sleeves shall be used.

B. Assembly of the thermoplastic tubing shall consist of pushing the tubing into the fitting and hand tightening the nut with final tightening with a wrench. Care shall be taken not to overtighten the nut. Plastic tube racks and bend holders shall be provided for holding the tubing in position. Needle valves used with thermoplastic tubing shall be the globe type constructed with a brass body, stem and seat and Buna-N "O"-ring seals. Installation shall be in accordance with the manufacturer's recommendations. Thermoplastic tubing, shall be the Impolene (polyallomor) system and needle valves, fittings and connectors shall be the Poly-Flo with 261 UB Universal Nut and Sleeve system as manufactured by Imperial Eastman, or equal.

2.13 FLEXIBLE RESTRAINED EXPANSION JOINTS

A. Restrained expansion joints shall be manufactured of 60-42-10 ductile iron conforming to material and other applicable requirements of ANSI/AWWA C153/A21.53.

B. Each pressure containing component shall be lined with a minimum of 15 mils of fusion bonded epoxy conforming to the materials requirements of, and tested in accordance with, ANSI/AWWA C213 and shall meet or exceed the requirements of ANSI/AWWA C550.

C. Seals shall conform to the applicable requirements of ANSI/AWWA C111/A21.11.

D. All bolts used in the assemblies shall be stainless steel and shall be coated with a premium quality epoxy.

E. Flanged ends shall comply with ANSI/AWWA C110/A21.10, with the addition of O-ring groove and O-ring.

F. Mechanical joint ends shall comply with ANSI/AWWA C153/A21.53.

G. Restrained expansion joints shall have a minimum pressure rating of 350 psi with a minimum safety factor of 3:1. Each assembly shall be tested at 350 psi before shipment.

H. Restrained expansion joints shall provide for self restraint without tie rods and shall provide for expansion and contraction capabilities cast as an integral part of the end connection.

I. Flexible restrained expansion joints shall allow for 8-inches (+6"-2") minimum expansion.

J. Flexible restrained expansion joints shall consist of an expansion joint designed and cast as an integral part of a ball and socket type flexible joint having a minimum of 15° deflection per ball.

K. Restrained expansion joints shall be the Single Ball or Double Ball FLEX-TEND Expansion Joint as manufactured by EBAA Iron Inc., or equal.

PART 3 -- EXECUTION

3.01 INSTALLATION

A. All piping shall be installed by skilled workmen and in accordance with the best standard practice for piping installation as shown on the Drawings, specified or recommended by the pipe manufacturer. Proper tools and appliances for the safe and convenient handling and installing of the pipe and fittings shall be used. Great care shall be taken to prevent any pipe coating from being damaged on the inside or outside of the pipe and fittings. All pieces shall be carefully examined for defects, and no piece shall be installed which is known to be cracked, damaged, or otherwise defective. If any defective pieces should be discovered after having been installed, it shall be removed and replaced with a sound one in a satisfactory manner by the Contractor and at his own expense. Pipe and fittings shall be thoroughly cleaned before they are installed and shall be kept clean until they are accepted in the complete work. All piping connections to equipment shall be provided with unions or coupling flanges located so that piping may be readily dismantled from the equipment. At certain applications, Dresser, Victaulic, or equal, couplings may also be used. All piping shall be installed in such a manner that it will be free to expand and contract without injury to itself or to structures and equipment to which it is connected. All piping shall be erected to accurate lines and grades with no abrupt changes in line or grade and shall be supported and braced against movement, temporary, or permanent. All exposed piping shall be installed with vertical and horizontal angles properly related to adjoining surfaces or pipes to give the appearance of good workmanship. Unless otherwise shown or approved, provided a minimum headroom clearance under all piping of 7 feet 6 inches.

B. Unless otherwise shown or specified, all waste and vent piping shall pitch uniformly at a 1/4-inch per foot grade and accessible cleanouts shall be furnished and installed as shown and as required by local building codes. Installed length of waste and vent piping shall be determined from field measurements in lieu of the Drawings.

C. All excavation shall be made in such a manner and to such widths as will provide ample room for properly installing the pipe and permit thorough compaction of backfill around the pipe. The minimum trench widths shall be in strict accordance with the "Trench Width Excavation Limits" as shown on the Drawings. All excavation and trenching shall be done in strict accordance with these specifications and all applicable parts of the OSHA Regulations, 29CFR 1926, Subpart P.

D. ALL EXCAVATION REQUIRED BY THIS CONTRACT SHALL BE UNCLASSIFIED. NO ADDITIONAL PAYMENT WILL BE MADE FOR ROCK EXCAVATION REQUIRED FOR THE INSTALLATION OF PIPE OR STRUCTURES SHOWN ON THE DRAWINGS.

E. Enlargements of the trench shall be made as needed to give ample space for operations at pipe joints. The width of the trench shall be limited to the maximum dimensions shown on the Drawings, except where a wider trench is needed for the installation of and work within sheeting and bracing. Except where otherwise specified, excavation slopes shall be flat enough to avoid slides which will cause disturbance of the subgrade, damage to adjacent areas, or endanger the lives or safety of persons in the vicinity.

F. Hand excavation shall be employed wherever, in the opinion of the Engineer, it is necessary for the protection of existing utilities, poles, trees, pavements, or obstructions.

G. No greater length of trench in any location shall be left open, in advance of pipe laying, than shall be authorized or directed by the Engineer and, in general, such length shall be limited to approximately one hundred (100) feet. The Contractor shall excavate the trenches to the full depth, width and grade indicated on the Drawings including the relevant requirements for bedding. The trench bottoms shall then be examined by the Engineer as to the condition and bearing value before any pipe is laid or bedding is placed.

H. No pressure testing shall be performed until the pipe has been properly backfilled in place. All pipe passing through walls and/or floors shall be provided with wall pipes or sleeves in accordance with the specifications and the details shown on the Drawings. All wall pipes shall be of ductile iron and shall have a water stop located in the center of the wall. Each wall pipe shall be of the same class, thickness, and interior coating as the piping to which it is joined. All buried wall pipes shall have a coal tar outside coating on exposed surfaces.

I. JOINT DEFLECTION SHALL NOT EXCEED 75 PERCENT OF THE MANUFACTURERS RECOMMENDED DEFLECTION. Excavation and backfilling shall conform to the requirements of Section 02200 - Earthwork, and as specified herein. Maximum trench widths shall conform to the Trench Width Excavation Limits shown on the Drawings. All exposed, submerged, and buried piping shall be adequately supported and braced by means of hangers, concrete piers, pipe supports, or otherwise as may be required by the location.

J. Following proper preparation of the trench subgrade, pipe and fittings shall be carefully lowered into the trench so as to prevent dirt and other foreign substances from gaining entrance into the pipe and fittings. Proper facilities shall be provided for lowering sections of pipe into trenches. UNDER NO CIRCUMSTANCES SHALL ANY OF THE MATERIALS BE DROPPED OR DUMPED INTO THE TRENCH.

K. Water shall be kept out of the trench until jointing and backfilling are completed. When work is not in progress, open ends of pipe, fittings, and valves shall be securely closed so that no water, earth, or other substance will enter the pipes, fitting, or valves. Pipe ends left for future connections shall be valved, plugged, or capped, and anchored as required.

L. All piping shall be installed in such a manner that it will be free to expand and/or contract without injury to itself or to structures and equipment to which it is connected. All piping shall be erected to accurate lines and grades with no abrupt changes in line or grade and shall be supported and braced against movement, temporary, or permanent. All exposed piping shall be installed with vertical and horizontal angles properly related to adjoining surfaces or pipes to give the appearance of good workmanship. Pipes crossing within a vertical distance of less than or equal to one (1) foot shall be encased and supported with concrete at the point of crossing to prevent damage to the adjacent pipes as shown on the Drawings.

M. The full length of each section of pipe shall rest solidly upon the bed of the trench, with recesses excavated to accommodate bells, couplings, joints, and fittings. Before joints are made, each pipe shall be well bedded on a solid foundation; and no pipe shall be brought into position until the preceding length has been thoroughly bedded and secured in place. Pipe that has the grade or joint disturbed after laying shall be taken up and relaid by the Contractor at his own expense. Pipe shall not be laid in water or when trench conditions are unsuitable for work.

N. Proper and suitable tools and appliances for the safe convenient handling and laying of pipe shall be used and shall in general agree with manufacturer's recommendations.

O. AT THE CLOSE OF EACH WORK DAY THE END OF THE PIPELINE SHALL BE TIGHTLY SEALED WITH A CAP OR PLUG SO THAT NO WATER, DIRT, OR OTHER FOREIGN SUBSTANCE MAY ENTER THE PIPELINE, AND THIS PLUG SHALL BE KEPT IN PLACE UNTIL PIPE LAYING IS RESUMED.

P. During the laying of pipe, each pipe manufacturer shall provide his own supervisor to instruct the Contractor's pipe laying personnel in the correct procedure to be followed.

Q. Ordinarily only full lengths of pipe (as furnished by the pipe manufacturer) shall be used <u>exceptions</u>: closure pieces at manholes and areas where joint deflection is required.

R. For gravity sewer installations, the Contractor shall use a laser device to maintain the trench and pipe alignment. The laser device shall be re-checked for correct elevation and pipe alignment prior to pipe installation if the device is left in the pipe overnight. Corrected

invert elevations at each manhole and any adjustments will be coordinated and approved by the Engineer.

S. ALL PIPING SHALL HAVE TYPE "A" BEDDING AS SHOWN ON THE DRAWINGS, UNLESS OTHERWISE SPECIFIED HEREIN OR INDICATED ON THE DRAWINGS.

3.02 REINFORCED CONCRETE PIPE, CONCRETE CULVERT, AND DRAIN PIPE

A. The laying of reinforced concrete pipe shall conform to the applicable sections of the Concrete Pipe Handbook as published by the American Concrete Pipe Association.

3.03 PRESTRESSED CONCRETE PIPE

A. The laying of prestressed concrete pipe shall be in accordance with the manufacturer's recommendations and shall conform to the applicable sections of AWWA Manual M-9. Prior to assembling the spigot end into the bell end, both ends shall be thoroughly cleaned and the rubber gasket and the bell end of the previously laid pipe shall be coated with vegetable soap furnished by the manufacturer.

B. For each crew that is inexperienced in laying this type of pipe, one reliable man shall be furnished by the manufacturer's representative with and instructed in the use of a set of steel inserts and feeler gauge to be used in determining if the rubber gasket is in proper position prior to the joint being pushed or pulled home. An experienced crew may omit the use of a feeler gauge. In either method of operation, the Contractor shall be responsible for a good, proper and sound joint. Any joint found in later tests to be faulty shall be repaired to the satisfaction of the Engineer.

C. After the pipe is "home" a cloth diaper (minimum 7-inches wide) supplied by the pipe manufacturer shall be placed and wired around the outside of the pipe at the joint. This diaper shall serve as a form for pouring a 1:2 cement-sand grout in the external recess.

D. Great care shall be taken to prevent the concrete core or jacket or the steel bell and spigot rings from being damaged, and any core, jacket or ring damaged in any way shall be repaired or replaced by the Contractor to the satisfaction of the Engineer.

3.04 DUCTILE IRON PIPE

A. Ductile iron pipe (DIP) shall be installed in accordance with the requirements of the Ductile Iron Pipe Handbook published by the Ductile Iron Pipe Research Association, and AWWA C600.

B. Where it is necessary to cut ductile iron pipe in the field, such cuts shall be made carefully in a neat workmanlike manner using approved methods to produce a clean square cut. The outside of the cut end shall be conditioned for use by filing or grinding a small taper, at an angle of approximately 30 degrees.

C. UNLESS OTHERWISE APPROVED BY THE ENGINEER, FIELD WELDING OF DUCTILE IRON WILL NOT BE PERMITTED.

3.05 PVC/CPVC AND HDPE PIPE

A. Polyvinyl chloride (PVC), chlorinated polyvinyl chloride (CPVC) and High Density Polyethylene (HDPE) pipe shall be laid and joints assembled according to the respective manufacturer's recommendation. PVC pipe installation shall comply with applicable sections of the Uni-Bell PVC Pipe Association Recommended Standard Specifications.

B. Plastic piping shall not be installed when the temperature is less then 60°F except as otherwise recommended by the manufacturer and approved by the Engineer.

3.06 CARBON AND STAINLESS STEEL PIPE

A. Installation of steel pipe shall be by skilled workmen and shall conform to the applicable sections of AWWA Manual M-11. Joints for steel piping shall be either screwed, welded, or flanged as shown on the Drawings or as specified.

B. Welding in the field shall be performed only when requested on the shop drawings and permitted by the Engineer for carbon steel pipe. No welding of stainless steel pipe shall be allowed in the field. All field welds shall be radiographically inspected.

C. Installation of the steel casing pipe shall be by skilled workmen and in accordance with the best standard practice for steel pipe installation. Joints for steel casing pipe shall be butt welded.

1. The boring equipment to be used for installing the jacked casing shall be of such size and capacity to allow the boring to proceed in a safe and expeditious manner. The installation of the casing and boring of the hole shall be done simultaneously to avoid cave-ins or settlement and for safety of traffic above.

2. The Contractor shall check the vertical and horizontal alignment of the casing by survey instrument at least once during each four feet of advance, or as directed by the Engineer. Pits shall be well sheeted and braced as necessary for safe and adequate access for workmen, inspectors and materials and shall be of a size suitable to equipment and material handling requirements.

3. Under no conditions shall jetting or wet boring of encasement under pavement be allowed.

4. After installation of the carrier pipe, each end of the casing pipe shall be made watertight with a brick masonry bulkhead. In addition, a Class B concrete cradle shall be provided from each end of the bulkhead to the first pipe joint outside of the bulkhead.

3.07 COPPER PIPE

A. Installation of copper pipe shall be by skilled workman in accordance with the manufacturer's recommendations. Use teflon tape at all fittings unless otherwise required for intended service. Install unions at the connections to each piece of equipment to allow removal of equipment without dismantling connecting piping.

B. Wall sleeves shall be provided for all piping passing through exterior walls and shall be of the same material as the piping to which it is joined. All wall sleeves shall be provided with an acceptable waterstop.

C. The Contractor shall provide hot and cold water mains with branches and risers complete from point indicated on the Drawings running to all fixtures and other outlets indicated. Mains and branches shall be run generally as shown on the Drawings. The Contractor shall provide all interior water piping, branches, and risers as shown on the Drawing and shall make connections to all plumbing fixtures, hose bibs, wall hydrants, and other points requiring water under this and other Divisions of the Specifications.

D. All water mains and branches shall be pitched at least one (1) inch in twenty-five (25) feet toward fixtures. The piping installation shall be arranged so that the entire system can be drained through fixture supply connections.

E. Unions shall be installed at the connections to each piece of equipment to allow for removal of equipment without dismantling connecting piping.

F. Joints 1-1/4 inches and larger shall be made with silver solder. For joints less than 1-1/4 inches and all valves (regardless of size) use 95/5 lead-free solder. Soldered joints shall be prepared with a non-corrosive paste flux in accordance with manufacturer's instructions. All joints shall be thoroughly cleaned with emery cloth and reamed out before assembly. Acid core solder will not be permitted.

3.08 POLYPROPYLENE AND POLYVINYLIDENE FLUORIDE PIPE

A. The pipe and fittings shall be of the same material for both inner and outer walls of the pipe.

B. Polypropylene pipe shall be black UV stabilized co-polymer conforming to the requirements of ASTM D-4101. Where used in exterior locations, material shall provide a weathering resistance absent of further coating, covering, or wrapping unless specified herein or shown on the Drawings.

C. Polyvinylidene flouride shall comply with ASTM D-3222. The material shall provide a translucence, thus enabling a visual inspection of liquid in the annular space between the inner and outer walls.

D. Where elastomers are selected by the manufacturer, such selection shall be with regard to the application of the chemical solution to be transported.

E. Pipe and associated fittings shall be rated for not less than 75 psi at 73°F.

F. Double-walled pipe and fittings shall be molded and used throughout. Molded ribs shall maintain permanent alignment of the inner and outer walls of the pipe and fittings.

G. Ends of fittings shall be flush, creating a single plane.

H. Wall thickness of the inner and outer walls of double-walled pipe shall be identical, providing identical pressure ratings.

I. Where shown on the Drawings, a leak detection system of the manufacturer's design shall be supplied, complete with vent pipes, manual drain outlet, and electric float switch. Switch shall be rated for 0.080 amps at 120 VAC.

J. Polypropylene and polyvinylidene flouride pipe shall be laid and joints assembled by skilled workers according to the respective manufacturer's recommendations. Joints shall be butt fusion welded.

K. Plastic piping shall not be installed when the ambient temperature is less than 60°F except as otherwise recommended by the manufacturer and approved by the Engineer.

L. Wall sleeves shall be provided where piping passes through exterior walls. All sleeves shall be provided with an acceptable waterstop.

M. Double walled pipe shall be Asahi/American or equal. Pipe shall be furnished complete with flanges or other appurtenant fittings by the same manufacturer and made especially for use with the double walled pipe.

3.09 JOINTS IN PIPING

A. Restrained joints shall be provided on all pipe joints as specified herein and shown on the Drawings. Restrained joints shall be made up similar to that for push-on joints.

B. Push-on joints include a single rubber gasket which fits into the bell end of the pipe. The gasket shall be wiped clean, flexed and then placed in the socket. Any bulges in the gasket which might interfere with the entry of the plain end of the pipe shall be removed. A thin film of lubricant shall be applied to the gasket surface which will come into contact with the spigot end of the pipe. The lubricant shall be furnished by the pipe manufacturer. The plain end of the pipe, which is tapered for ease of assembly, shall be wiped clean and a thick film of lubricant applied to the outside. The pipe shall be aligned and carefully entered into the socket until it just makes contact with the gasket. The joint assembly shall be completed by entering the pipe past the gasket until it makes contact with the bottom of the socket. The pipe shall be pulled "home" with an approved jack assembly as recommended by the pipe manufacturer. If assembly is not accomplished by reasonable force, the plain end shall be removed and the condition corrected.

C. Flanged joints shall be brought to exact alignment and all gaskets and bolts or studs inserted in their proper places. Bolts or studs shall be uniformly tightened around the joints. Where stud bolts are used, the bolts shall be uniformly centered in the connections and equal pressure applied to each nut on the stud. Pipes in all lines subject to temperature changes shall be cut short and cold sprung into place to compensate for expansion when hot.

D. Mechanical joints shall be made up with gaskets, glands and bolts. When a joint is to be made up, the bell or socket and plain end shall be cleaned and washed with a solution of mild soap in water; the gland and gasket shall be slid onto the plain end and the end then entered into the socket until it is fully "home" on the centering ring. The gasket shall then be painted with soapy water and slid into position, followed by the gland. All bolts shall be inserted and made up hand tight and then tightened alternately to bring the gland into position evenly. Excessive tightening of the bolts shall be avoided. All nuts shall be pulled up using a torque wrench which will not permit unequal stresses in the bolts. Torque shall not exceed the recommendations of the manufacturer of the pipe and bolts for the various sizes. Care shall be taken to assure that the pipe remains fully "home" while the joint is being made. Joints shall conform to the applicable AWWA Specifications.

E. Threaded and/or screwed joints shall have long tapered full depth threads to be made with the appropriate paste or jointing compound, depending on the type of fluid to be processed through the pipe. All pipe up to, and including 1-1/2-inches, shall be reamed to remove burr and stood on end and well pounded to remove scale and dirt. Wrenches on valves and fittings shall be applied directly over the joint being tightened. Not more than three pipe threads shall be exposed at each connection. Pipe, in all lines subject to temperature changes shall be cut short and cold sprung into place to compensate for expansion when hot. Joints in all piping used for chlorine gas lines shall be made up with a glycerine and litharge cement. Joints in plastic piping (PVC/CPVC) shall be laid and joints made with compounds recommended by the manufacturer. Installation shall conform to the requirements of ASTM D2774 and ASTM D2855. Unions required adjacent to valves and equipment.

F. Soldered joints shall have the burrs removed and both the outside of pipe and the inside of fittings shall be thoroughly cleaned by proper tools recommended for that purpose. Flux shall be applied to both pipe and inside of fittings and the pipe placed into fittings and rotated to insure equal distribution of flux. Joints shall be heated and solder applied until it shows uniformly around the end of joints between fitting and pipe. All joints shall be allowed to self-cool to prevent the chilling of solder. Combination flux and solder paste manufactured by a reputable manufacturer is acceptable. Unions required adjacent to valves and equipment.

G. Welded joints shall be made by competent operators in a first class workmanlike manner, in complete accordance with ANSI B31.1 and AWWA C206. Welding electrodes shall conform to ASTM A233, and welding rod shall conform to ASTM A251. Only skilled welders capable of meeting the qualification tests for the type of welding which they are performing shall be employed. Tests, if so required, shall be made at the expense of the

Contractor, if so ordered by the Engineer. Unions shall be required adjacent to valves and equipment.

H. Copper joints shall be thoroughly cleaned and the end of pipes uniformly flared by a suitable tool to the bevels of the fittings used. Wrenches shall be applied to the bodies of fittings where the joint is being made and in no case to a joint previously made. Dimensions of tubing and copper piping shall be in complete accordance with the fittings used. No flare joints shall be made on piping not suited for flare joints. Installations for propane gas shall be in accordance with NFPA 54 and/or 58.

I. Solvent or adhesive welded joints in plastic piping shall be accomplished in strict accordance with the pipe manufacturer's recommendations, including necessary field cuttings, sanding of pipe ends, joint support during setting period, etc. Care shall be taken that no droppings or deposits of adhesive or material remain inside the assembled piping. Solvent or adhesive material shall be compatible with the pipe itself, being a product approved by the pipe manufacturer. Unions are required adjacent to valves and equipment. Sleeve-type expansion joints shall be supplied in exposed piping to permit 1-inch minimum of expansion per 100 feet of pipe length.

J. Dielectric unions shall be installed wherever dissimilar metals are connected except for bronze or brass valves in ferrous piping. Unions shall be provided downstream of each valve with screwed connections. The Contractor shall provide screwed or flanged unions at each piece of equipment, where shown, and where necessary to install or dismantle piping.

K. Eccentric reducers shall be installed where air or water pockets would otherwise occur in mains because of a reduction in pipe size.

L. Joints in polypropylene and polyvinylidelene fluoride pipe shall be butt fusion weld. All butt welding shall follow the requirements of ASTM D-2657 and the manufacturer's recommendations.

3.10 FLUSHING AND TESTING

A. All piping shall be properly flushed and tested unless specifically exempted elsewhere in the Specifications or otherwise approved by the Engineer. Air and gas pipelines shall be flushed and tested with compressed air. Gravity sewer piping shall be flushed and tested as specified in Division 2. All other liquid conveying pipelines shall be flushed and tested with water. The Contractor shall furnish and install all means and apparatus necessary for getting the air or water into the pipeline for flushing and testing including pumps, compressors, gauges, and meters, any necessary plugs and caps, and any required blow-off piping and fittings, etc., complete with any necessary reaction blocking to prevent pipe movement during the flushing and testing. All pipelines shall be flushed and tested in such lengths or sections as agreed upon among the Owner, Engineer, and Contractor. Test pressures shall be as specified in Section 15390 – Schedules, and shall be measured at the lowest point of the pipe segment being tested. The Contractor shall give the Owner and Engineer reasonable notice of the time when he intends to test portions of the

pipelines. The Engineer reserves the right, within reason, to request flushing and testing of any section or portion of a pipeline.

B. The Contractor shall provide water for all flushing and testing of liquid conveying pipelines. Raw water or non-potable water may be used for flushing and testing liquid pipelines not connected to the potable water system. Only potable water shall be used for flushing and testing the potable water system.

C. Air and gas piping shall be completely and thoroughly cleaned of all foreign matter, scale, and dirt prior to start-up of the air or gas system.

D. At the conclusion of the installation work, the Contractor shall thoroughly clean all new liquid conveying pipe by flushing with water or other means to remove all dirt, stones, pieces of wood, etc., which may have entered the pipe during the construction period. If after this cleaning any obstructions remain, they shall be corrected by the Contractor, at his own expense, to the satisfaction of the Engineer. Liquid conveying pipelines shall be flushed at the rate of at least 2.5 feet per second for a duration suitable to the Engineer or shall be flushed by other methods approved by the Engineer.

E. Compressed/service air and gas piping shall be flushed by removing end caps from the distribution lines and operating one (1) compressor, in accordance with the manufacturer's instructions.

F. After flushing, all air piping shall be pressure and leak tested prior to coating and wrapping of welded joints. Immediately upon successful completion of the pressure and leak test, welded joints shall be thoroughly cleaned of all foreign matter, scale, rust, and discoloration and coated in accordance with the Specifications.

G. All process air piping shall be leak tested by applying a soap solution to each joint. Leak tests shall be conducted with one (1) blower in service at normal operating pressure.

H. During testing the piping shall show no leakage. Any leaks or defective piping disclosed by the leakage test shall be repaired or replaced by the Contractor, at his own expense, and the test repeated until all such piping shows tight.

I. All buried process air piping shall be pressurized to 25 psig and tested for leaks by applying a soap solution to each joint. The air supply shall be stopped and the pipe pressure monitored. System pressure shall not fall by more than 0.5% of the 25 psig test pressure over a one-hour test period. Should the system fail to hold the required pressure for one hour, the cause shall be determined and corrected and the test repeated until a successful test of the entire system is obtained.

J. Field leakage tests shall be performed for all submerged process air piping. The procedure shall consist of operating the system under clear nonpotable water for visual identification of all leaks. All field leakage tests shall be witnessed by the Engineer. All submerged piping shall be installed free of any leaks.

K. After flushing, all liquid conveying pipelines shall be hydrostatically tested in accordance with Division 15.

3.11 DISINFECTION

A. All pipe and fitting connected to and forming a part of a potable water supply shall be disinfected in accordance with the procedures described in AWWA C 651. Disinfection shall also be in accordance with the requirements of Division 15 and the Owner.

3.12 PAINTING AND COLOR CODING SYSTEM

A. All exposed piping specified shall be color coded in accordance with the Owner's standard color designation system for pipe recognition and in accordance with Section 15030 – Piping and Equipment Identification Systems. In the absence of a standard color designation system, the Engineer will establish a standard color designation for each piping service category from color charts submitted by the Contractor in compliance with Section 09900 – Painting.

B. All piping specified in this Section shall be painted in accordance with Section 09900 – Painting, except as follows:

1. Copper pipe

2. Stainless steel pipe. Flanges and supports or hangers shall be painted.

- END OF SECTION -

SECTION 15006 - DUCTILE IRON PIPE

PART 1 -- GENERAL

1.01 WORK INCLUDED

A. The CONTRACTOR shall furnish and install ductile iron pipe and all appurtenant Work, complete in place, all in accordance with the requirements of the Contract Documents.

1.02 RELATED WORK SPECIFIED ELSEWHERE

A. Section 01300 – Submittals

B. Section 01600 – Materials and Equipment

C. Section 02222 – Excavation and Backfill for Utilities

D. Section 09900 – Painting

E. Section 15000 – Basic Mechanical Requirements

F. Section 15390 – Schedules

G. Section 15995 – Pipeline Testing and Disinfection

1.03 REFERENCED SPECIFICATIONS, CODES, AND STANDARDS

A. Commercial Standards:

AWWA C104	Cement Mortar Lining for Ductile Iron Pipe and Fittings For Water.
AWWA C110	Ductile-iron and Gray-Iron Fittings.
AWWA C111	Rubber-Gasket Joints for Ductile-Iron Pressure Pipe and Fittings.
AWWA C150	Thickness design of ductile iron pipe.
AWWA C151	Ductile-iron Pipe, Centrifugally Cast, For Water.
AWWA C600	Installation of Ductile-Iron Water Mains and Their Appurtenances.

1.04 SUBMITTALS

A. Shop Drawings: The CONTRACTOR shall submit Shop Drawings of pipe and fittings in accordance with the requirements set forth in the Sections entitled “Basic Mechanical Requirements” and “Submittals.”

B. CONTRACTOR shall submit certification that all materials coming in contact with potable water comply with the requirements of NSF 61.

1.05 SCHEDULE OF PIPING MATERIALS

A. A schedule of piping materials is included in the Section entitled “Schedules.” The schedule indicates service, nominal pipe size, material, wall thickness, joint type, working pressure, restraint design pressure, test pressure, coatings and linings.

PART 2 -- PRODUCTS

2.01 GENERAL

A. Pipe shall be centrifugally cast in metal molds or sand lined molds in accordance with AWWA C151 of grade 60-42-10 ductile iron. The above standard covers ductile iron pipe with nominal pipe sizes from three inches up to and including sixty-four inches in diameter. Working pressure shall be as specified herein, unless higher pressure is indicated on the Piping Schedule in the Section entitled “Schedules.”

B. Wall Thickness

1. Buried Pipe:

a. 30-inch diameter and greater shall be Pressure Class 300.

b. 24-inch diameter and smaller shall be Pressure Class 350.

2. Flanged Pipe: Pipe wall thickness of threaded pipe for a flanged pipe end shall be minimum special thickness Class 53 from 4-inch to 54-inch and/or minimum Pressure Class 350 for 60-inch to 64-inch diameter pipe in accordance with AWWA C115.

3. Grooved Pipe: Grooved coupling pipe shall be special thickness Class 54, or greater if required by pipe manufacturer. Pipe groove dimensions shall be for rigid joints unless otherwise indicated on the drawings.

C. Joints

1. Ductile iron pipe above grade shall be flanged.

2. All pipe and fittings below grade shall be restrained joint type.

3. Mechanical and push-on type joints shall be in accordance with AWWA C111.

4. Flanges for flanged pipe shall be in accordance with AWWA C115, shall be ductile iron, shall be rated at 250 psi maximum working pressure, and shall be similar to flange Class 125 per ASME B16.1. Where shown on the Drawings, pipe and fittings shall be furnished with flanges similar to flange Class 250 per ASME B16.1. Fittings shall be provided with flanges having a bolt circle and bolt pattern the same as the adjacent pipe and/or mechanical devices. Joint materials shall be ANSI sized and approved and shall consist of hot dip galvanized carbon steel bolts and nuts and full faced gaskets, unless otherwise specified.

5. No raised face flanges shall be used. The raised faces shall be milled flat.

6. Flange gaskets shall be full face Toruseal gaskets by American Cast Iron Pipe Co., or FLANGE-TYTE gaskets by U.S. Pipe, or equal. Gaskets shall be nominal 1/8" thick EPDM rubber (alternative materials will not be accepted).

D. Restrained Joints

1. All ductile iron pipe and fittings below grade shall be restrained joint.

2. Manufactured Proprietary Restrained Joint Piping: Restrained joint pipe shall be Flex-Ring or Lok-Ring type as manufactured by American Cast Iron Pipe, TR Flex as manufactured by U.S. Pipe, or equal.

3. Restrained Mechanical Joint Fittings: All mechanical joint fittings, valves and appurtenances shall be restrained as described herein. The restraint rings shall be manufactured of ductile iron conforming to ASTM A536 and incorporate a plurality of individually-actuating gripping surfaces to grip the pipe. The restraint device shall be coated in MEGA-BOND® Restraint Coating System, or equal. The restraint system shall consist of two series 1100 MEGALUGS® mechanical joint restraint follower glands with the second follower gland having the mechanical joint lip removed at the factory to seat properly behind the first. The restraint system shall have a sufficient number of fastening bolts to connect the rings to the mechanical joint. The restraint system shall have a minimum safety factor of 2 to 1. The restraint system shall be the Series 1100TDM Tandem MEGALUG Mechanical Joint Restraint manufactured by EBAA Iron, Inc., or equal. Use of this restraining system shall be approved by the ENGINEER for each application.

E. Fittings

1. General: Fittings shall be manufactured in accordance with AWWA C110 or AWWA C153 or the manufacturer's standard.

2. Pressure Rating: 350 psi minimum working pressure for 4- to 24-inch fittings and 250 psi minimum working pressure for 30- to 64-inch fittings.

3. Materials: Fittings shall be ductile iron.

4. Joints - General: Fittings shall be either flanged, mechanical joint or manufactured proprietary restrained joint type as indicated on the Drawings and specified herein.

5. Flanged Joint Fittings: Above ground fittings shall be flanged.

6. Manufacturer Proprietary Restrained Joint Fittings: Unless otherwise indicated on the Drawings or specified herein, all below ground fittings 30-inches in diameter and greater shall be manufacturer proprietary restrained joint type.

7. Mechanical Joint Fittings: Underground ductile iron fittings 24-inches in diameter and less shall be mechanical joint type fittings.

F. Pipe Lining and Coating General: Pipe linings and coatings shall be as follows:

1. Buried Service: The piping manufacturer's standard asphaltic coating shall be applied prior to shipment to the exterior wall of buried pipe and fittings in accordance with AWWA C151.

2. Above Ground Piping and Exposed Piping within Underground Vaults: A coating of rust inhibitive primer, compatible with the coating system specified in the Section entitled "Painting," shall be applied to the pipe exterior prior to shipment for piping that is above ground and exposed piping within vaults. Primer for pipe used for potable water main applications shall be compliant with NSF Standard 61.

3. Cement-Mortar Lining: Where scheduled, pipe and fittings shall be cement-lined and seal-coated in accordance with AWWA C104, Cement-Mortar Lining for Ductile-Iron Pipe and Fittings for Water.

PART 3 -- EXECUTION

3.01 INSTALLATION

A. The CONTRACTOR shall perform all earthwork including excavation, backfill, bedding, compaction, sheeting, shoring and bracing, dewatering and grading in accordance with Division 2 - Sitework.

B. Unless otherwise directed, ductile iron pipe shall be laid with the bell ends facing upstream in the normal direction of flow and in the direction of laying.

C. Thrust restrained and mechanical joints shall be made in accordance with the manufacturer's standards except as otherwise specified herein. Joints between mechanical joint pipe and/or fittings shall be made in accordance with AWWA C600, except that deflection at joints shall not exceed one-half of the manufacturer's recommended allowable deflection, or one-half of the allowable deflection specified in AWWA C600, whichever is the lesser amount.

D. Before laying thrust restrained and mechanical joint pipe and fittings, all lumps, blisters and excess bituminous coating shall be removed from the bell and spigot ends. The outside of each spigot and the inside of each bell shall be wire brushed, and wiped clean and dry. The entire gasket groove area shall be free of bumps or any foreign matter which might displace the gasket. The cleaned spigot and gasket shall not be allowed to touch the trench walls or trench bottom at any time. Vegetable soap lubricant shall be applied in accordance with the pipe manufacturer's recommendations, to aid in making the joint. The CONTRACTOR shall exercise caution to prevent damage to the gasket or the adherence of grease or particles of sand or dirt. Deflections shall only be made after the joint has been assembled.

E. Prior to making up flanged joints in ductile iron pipe and fittings, the back of each flange under the bolt heads and the face of each flange shall have all lumps, blisters and excess bituminous coating removed and shall be wire brushed and wiped clean and dry. Flange faces shall be kept clean and dry when making up the joint, and the CONTRACTOR shall exercise caution to prevent damage to the gasket or the adherence of grease or particles

of sand or dirt. Bolts and nuts shall be tightened by opposites in order to keep flange faces square with each other, and to ensure that bolt stresses are evenly distributed.

F. Bolts and nuts in thrust restrained, mechanical and flanged joints shall be tightened in accordance with the recommendations of the pipe manufacturer for a leak-free joint. The mechanics shall exercise caution to prevent overstress. Torque wrenches shall be used until, in the opinion of the ENGINEER, the mechanics have become accustomed to the proper amount of pressure to apply on standard wrenches.

G. Cutting of the ductile iron pipe for inserting valves, fittings, etc., shall be done by the CONTRACTOR in a neat and professional manner without damage to the pipe, the lining, or the coating. Pipe 16 inches and larger in diameter shall be cut with a mechanical pipe saw. After cutting the pipe, the plain end shall be beveled with a heavy file or grinder to remove all sharp edges.

H. Areas of loose or damaged lining associated with field cutting shall be repaired or replaced as recommended by the pipe manufacturer and required by the ENGINEER. Repair methods shall be as recommended by the manufacturer and shall be submitted to the ENGINEER for review.

I. Any work within the pipe shall be performed with care to prevent damage to the lining. No cable, lifting arms or other devices shall be inserted into the pipe. All lifting, pulling or pushing mechanisms shall be applied to the exterior of the pipe barrel.

J. Homing the pipe shall be accomplished by the use of a hydraulic or mechanical pulling device, unless otherwise accepted by the ENGINEER. No pipe shall be driven or struck in order to seat it home.

K. Cleaning: Cleaning methods shall be acceptable to the ENGINEER, and must be sufficient to remove silt, rocks, or other debris which may have entered the pipeline during its installation and shall also follow the requirements of the Section entitled "Pipeline Testing and Disinfection."

- END OF SECTION -

SECTION 15013 - STAINLESS STEEL TUBING

PART 1 -- GENERAL

1.01 THE REQUIREMENT

A. Tubing, fittings and valves for the connection of instruments to the process piping shall be furnished and installed as specified herein.

B. Where the Drawings indicate stainless steel tubing, fitting and valves from ½-inch to 2-inch diameter they shall be furnished and supplied as specified herein.

1.02 RELATED WORK SPECIFIED ELSEWHERE

A. Section 01300 – Submittals

B. Division 17 – Instrumentation

1.03 SUBMITTALS

A. The Contractor shall combine the submittal with the submittal of related instrumentation by Division 17 to show proper interconnection of all components.

B. Contractor shall submit certification that all materials coming in contact with potable water comply with the requirements of NSF 61.

C. Furnish documentation demonstrating that the pipe thread sealant is NSF-14 and NSF-61 certified for use in potable water.

1.04 ACCEPTABLE MANUFACTURERS, OR EQUAL

A. Tubing, Fittings and Valves:

1. Swagelok

2. Parker Hannifin

1.05 REFERENCE STANDARDS

ASTM A182	Standard Specification for Forged or Rolled Alloy-Steel Pipe Flanges, Forged Fittings, and Valves and Parts for High-Temperature Service
ASTM A269	Standard Specification for Seamless and Welded Austenitic Stainless-Steel Tubing for General Service
ASTM A276	Standard Specification for Stainless Steel Bars and Shapes

PART 2 – PRODUCTS

2.01 STAINLESS-STEEL TUBING

A. Applications: Instrumentation tubing and where shown on the Drawings.

B. Sizes: 1/8-inch to 2-inch outside diameter.

C. Material Standards:

1. Grade: 316L stainless steel, seamless

2. ASTM: A269

D. Nominal Wall Thicknesses:

Tube Outside Diameter (inches)	Nominal Wall Thickness (inches)
1/4	0.035
3/8	0.049
1/2	0.049
3/4	0.065
1	0.083
1-1/2	0.120
2	0.134

2.02 FITTINGS

A. Sizes: 1/8-inch to 2-inch outside diameter.

B. Type: 2-ferrule compression fittings.

C. Adapters: Furnish NPT threaded end adapters as required for connections with valves, piping and equipment.

C. Materials: 316 stainless steel per the requirements of ASTM A276 or ASTM A182.

D. Threaded End Standard: ASME B1.20.1.

2.03 STAINLESS-STEEL VALVES FOR INSTRUMENTATION

A. Sizes: 1/8-inch to 2-inch nominal diameter.

B. Type: Two-way ball valves.

C. Ends: Either female NPT ends with dimensions conforming to ASME B1.20.1 or tube fitting end connections are acceptable.

D. Valve Body, ball, and stem materials: 316 stainless steel.

E. Valve Seat Material: Reinforced PTFE.

F. Handles: Locking lever bracket type.

G. Acceptable Model and Manufacturer: 60 Series by Swagelok, or Equal.

2.04 TUBING SUPPORTS

A. Tube Size Range: ¼-inch to 1-inch diameter.

B. Maximum Support Spacing: 3-feet on center.

C. Cushioned Clamp Tube Supports: Use cushioned clamp tube supports for channel type mounting.

1. Clamp Material: 316 stainless steel.

2. Cushion Material: Elastomeric type material.

D. Tubing Support Manufacturer, or Equal: Model SS-TBC by Swagelok, or Equal.

E. Channels: 316 stainless steel, as manufactured by Uni-strut, or equal.

2.05 THREAD JOINT SEALANTS

A. General: Threaded joints shall be sealed with a material certified by the manufacturer to be suitable for the intended service.

B. Certifications: Joint sealant shall be certified by NSF-14 and NSF-61.

C. Products and Manufacturers, Or Equal:

1. Gasoila® Soft-Set Thread Sealant with PTFE by Gasoila Chemicals (http://www.gasoila.com/)

2. RectorSeal® No. 5® by Rectorseal (http://www.rectorseal.com/)

PART 3 -- EXECUTION

3.01 INSTRUMENT INSTALLATION

A. The CONTRACTOR shall coordinate with the instrumentation supplier to ensure all components are delivered and installed in accordance with the manufacturers' instructions.

B. The instrumentation supplier shall furnish instrumentation assemblies that may include valve manifolds, process seals, test ports, valves, piping or other appurtenant items as specified in other sections. The CONTRACTOR shall coordinate with the instrument

supplier to ensure proper interconnection of instrument assemblies to process piping or equipment.

3.02 THREADED FITTING INSTALLATION

A. Thread Sealant Application: Apply thread sealant to the male thread only, in such a manner as to prevent its entrance into the piping system. Apply lubricant according to the manufacturer's written instructions.

3.03 CONNECTIONS WITH BURIED INSTRUMENT PIPING

A. General: Buried instrumentation piping shall be copper tubing as indicated on the Drawings. Instrumentation piping above the floor of the proposed pump station shall be stainless steel tubing as specified herein. Copper tubing shall transition to stainless steel tubing where the instrumentation tubing comes above the pump station floor. Install a dielectric union to join the dissimilar materials.

- END OF SECTION -

SECTION 15014 - COPPER TUBING

PART 1 -- GENERAL

1.01 THE REQUIREMENT

A. Copper tubing and fittings up to 2-inches in diameter shown on the Drawings shall be furnished and installed as specified herein.

1.02 SUBMITTALS

A. Submit shop drawings in accordance with Section 01300.

B. Contractor shall submit certification that all materials contacting potable water comply with the requirements of NSF 61.

C. Furnish documentation demonstrating that the solder complies with the requirements of NSF 61.

PART 2 – PRODUCTS

2.01 COPPER TUBING AND FITTINGS

A. Scope: This article applies to potable water piping where shown on the Drawings.

B. Materials:

1. Copper Tubing: The tubing shall be Type K drawn temper (i.e., hard and rigid) copper tubing. Tubing material shall conform to ASTM B 88 and NSF 61.

2. Solder: The solder material shall be made up with lead free 95-5 (95% Tin and 5% Antimony) solder for all tube sizes. Solder material shall conform to ASTM B 32.

3. Threaded Joint Fittings: ASME/ANSI B16.15 - Cast Bronze Threaded Fittings.

4. Soldered Joint Fittings: ASME/ANSI B16.22 - Wrought Copper and Copper Alloy Solder Joint Pressure Fittings.

5. Flanged Joint Fittings: ASME/ANSI B16.24 - Cast Copper Alloy Pipe Flanges and Flanged Fittings.

C. Joining Method:

1. Threaded and Soldered Joints: Threaded or soldered joints are acceptable for buried piping.

2. Flanged Joints: Flanged joints shall be allowed above ground only.

3. Flared Joints: Flared joints shall be made by a tool designed for that operation and then solder the two tubes together.

4. Joints Between Dissimilar Materials: Provide dielectric unions or flanges on all connections between dissimilar materials to prevent electrolysis or galvanic corrosive action.

2.02 DIELECTRIC UNIONS AND FLANGES

A. General: Furnish and install dielectric unions and flange unions wherever there is a need to prevent electrolysis or galvanic corrosive action such as when joining dissimilar metals in the piping and plumbing systems. Dielectric unions shall be supplied where needed whether shown on the Drawings or not.

B. Manufacturer:

1. Watts Regulator Co.;

2. Central Plastics Company (as supplied by Corrosion Control Products Company);

3. Or, Equal.

PART 3 -- EXECUTION

3.01 UNIONS

A. Provide unions on aboveground tubing 2 inches and smaller as follows:

1. Six to 12 inches downstream of valves.

2. Near threaded connections to mechanical equipment.

3. On both sides of threaded valves and other in-line instruments.

4. As required to allow installation of piping.

5. Where shown on the Drawings.

- END OF SECTION -

SECTION 15020 - PIPE SUPPORTS

PART 1 -- GENERAL

1.01 THE REQUIREMENT

A. Furnish all equipment, labor, materials, and design calculations required to provide pipe supports in accordance with the Contract Documents.

1.02 RELATED WORK SPECIFIED ELSEWHERE

A. Section 01350 – Seismic Anchorage and Bracing

B. Division 3, Concrete – Appropriate and Related Sections

C. Section 05010 – Metal Materials

D. Section 05035 – Galvanizing

E. Section 05050 – Metal Fastening

F. Section 05061 – Stainless Steel

G. Section 05120 – Structural Steel

H. Section 05500 – Metal Fabrications

I. Section 15000 – Basic Mechanical Requirements

1.02 SUBMITTALS

A. Applicable and associated cut sheets and drawings for materials and support components shall be submitted with the Shop Drawings in accordance with or in addition to the submittal requirements specified in Section 01300 – Submittals: Section 15000 - Basic Mechanical Requirements and other referenced Sections above.

1. Catalog cut information on all system components such as pipe supports, hangers, guides, anchors, and channel-type supports.

2. Drawings of the piping support systems, locating each support, brace, hanger, guide, component and anchor. Identify support, hanger, guide and anchor type by catalog number and Shop Drawing detail number.

3. Table showing the manufacturer's recommended hanger support spacing for PVC, CPVC and FRP pipe for the services listed in Section 15390 - Schedules.

1.03 QUALITY ASSURANCE

A. Piping support systems shall be designed and Shop Drawings prepared and sealed by a Professional Engineer licensed in the State of Florida.

PART 2 – PRODUCTS

2.01 GENERAL

A. The Contractor shall be responsible for the design of all piping support systems not specifically designed by the Engineer and detailed on the Drawings. The supports typically detailed on the Drawings, not included on Standard Detail Drawings, are designed to resist resulting external thrust forces in addition to gravity, seismic and other applicable loads required by the governing building code.

B. No attempt has been made to show all of the required pipe supports either on the main Drawings or on the standard detail drawings. The absence of pipe supports and details on the Drawings shall not relieve the Contractor of the responsibility of providing them throughout the project at no additional cost to the Owner.

C. Where special pipe support fabrications are required, products and execution shall be as specified in Section 05500 - Metal Fabrications and other related and referenced Sections of the Specifications. .

D. Existing piping support systems to support new piping shall only be used if the Contractor can show and demonstrate by submitting supporting calculations that they are adequate for the additional load imposed by the new piping, or if they are strengthened to support the additional load.

E. Design Criteria for Piping Support Systems:

1. Design pipe supports for dead loads imposed by the weight of the pipes filled with water, except for air and gas pipelines, plus the weight of insulation. If applicable by location, ice loads per code shall be applied as indicated in the governing building code.

2. Design for the thermal expansion and contraction of the piping and its associated pipe support and pipe expansion systems and couplers.

3. A minimum safety factor of 2 or as approved by the Engineer, based upon the yield strength of the support material, shall be used for pipe supports, braces, hangers, and guides as well as for beam and column members used in channel-type support systems.

4. The horizontal pipe hanger and/or floor support spacing shall be as recommended by the pipe and/or hanger manufacturer, but shall not exceed 10 feet on center unless indicated otherwise herein or on the Drawings.

5. Seismic and sway bracing shall be provided at maximum 10-foot centers.

6. The design, sizing and spacing of anchor bolts, including concrete anchors, shall be based on withstanding shear and pullout loads imposed by loading at each particular support. The minimum anchor bolt size shall be ½ inches in diameter.

2.02 HANGERS AND SUPPORTS

A. All piping shall be adequately supported and braced by means of steel hangers and/or supports, concrete piers, supplemental lateral bracing components, pre-fabricated brackets, or otherwise as may be required by the location and forces applied per governing code, including gravity and lateral forces from earthquake and/or wind (if exterior). Generally, concrete supports shall be used where pipe centerline is less than 3 feet above floor, and hangers above 6 feet unless specified or shown otherwise. Supports shall be not more than 10 feet on center for steel and cast iron, 5 feet on center for plastic unless otherwise shown on the Drawings or required by the specific manufacturer. All necessary inserts or appurtenances shall be furnished and installed in the concrete or structures for adequately securing hangers and supports to the structure. Refer to Standard Detail Drawings.

1. Metal pipe support materials, where stainless steel pipe is supported, shall be Type 316 stainless steel.

2. Metal pipe support materials, where carbon steel, ductile or other ferrous pipe is supported, shall be galvanized carbon steel meeting Section 05120 - Structural Steel and Section 05035 - Galvanizing unless indicated otherwise on the Drawings or in the specifications or by the Engineer.

3. Metal pipe supports indicated as standard type pipe hangers are designed and detailed for gravity loading only. Resulting lateral loads from wind, earthquake, or other lateral loads per code, or special loading conditions during construction, shall be applied to the pipe in accordance with the governing building code. Supplemental lateral stiffening members (when necessary) shall be provided along pipe or at gravity supports using appropriate supplemental members and connections when required by calculations. The Contractor shall include design calculations and details with all pipe hangar and support submissions for review by the Engineer. The main structure and structural components that will support the pipe hangers and other appurtenant components of the facility have been designed to resist all resulting secondary lateral loading from pipe hangers and other non-structural members for gravity and resulting lateral loads.

B. Hangers and supports shall conform to the following requirements:

1. All fabricated metal hangers and supports shall be capable of adjustment after installation. Different types of hangers and supports along a pipe length, including bends, shall be kept to a minimum.

2. Hanger rods shall be straight and vertical. Chain, wire, strap, or perforated bar hangers shall not be used. Hangers shall not be suspended from other piping.

3. Vertical piping shall be properly supported at each floor and between floors by stays or braces to prevent rattling and vibration.

4. Supports and hangers for plastic and FRP piping shall include wide saddles or bands as recommended by the manufacturer and approved by the Engineer to

distribute load and thus avoid localized deformation of the pipe.

5. Hanger and supports shall prevent contact between dissimilar metals by use of copper plated, rubber, vinyl coated or stainless steel hangers.

6. Ferrous pipes to be painted shall be painted in accordance with Section 09900 - Painting. Ferrous pipes that require painting or galvanizing shall be supported by galvanized hangers and supports. Stainless steel piping shall be supported by stainless steel saddles and straps (if required).

7. Copper piping shall be supported by plastic coated or copper plated steel hangers and supports.

8. Plastic piping shall be supported by plastic coated steel hangers and supports.

9. Hangers and supports shall provide for thermal expansion throughout the full operating temperature range.

10. Expansion and adhesive type anchors used for pipe hangers and supports shall be Type 304 stainless steel.

C. Metallic hangers and supports may be standard make by Anvil International, Inc., "Witch" by Carpenter & Paterson, Ltd., B-Line Systems, Inc., or equal; and data on the types and sizes to be used shall be furnished to the Engineer for approval. Metallic support system brackets, rods, support clips, clevis hangers, hardware, etc. shall be cast iron or welded steel construction. All gravity type hangers and supports shall be restrained laterally to resist seismic loading and other loading as required by the governing code.

D. Non-metallic support system shall be a heavy duty channel framing system. Channel frames shall be manufactured by the pultrusion process using corrosion grade polyester or vinylester resins. All fiberglass construction shall include suitable ultraviolet inhibitors for UV exposure and shall have a flame spread rating of 25 or less per ASTM E84. Piping accessories, pipe clamps, clevis hangers, support posts, support racks, fasteners, etc., shall be constructed of vinylester or polyurethane resin. Non-metallic support systems shall be standard make Aickinstrut by Aickinstrut, Inc., Unistrut Fiberglass by Unistrut, Inc., Enduro Fiberglass Systems, or equal. The Contractor shall submit data on the types and sizes of approval. Unless otherwise shown or specified the Contractor shall provide support spacings in the conformance with the pipe and support system manufacturer's requirements.

2.03 PROCESS AIR PIPE SUPPORTS

A. Unless specifically designed and detailed on the Drawings, process air piping shall be supported by slide bearings as manufactured by Fluorocarbon Company, Anaheim, California, Anvil International, Inc., Portsmouth, New Hampshire, or equal. Refer to Section 05830 – Bearing Devices and Anchoring for supplemental information and requirements.

B. The slide bearing material shall be 3/32 inch thick, 25 percent glass-fiber reinforced structural grade teflon. The bearing material shall withstand at least 1000 psi

(compression) at 250°F with a coefficient of friction between .05 and.08. The performance of bearing and bonding materials shall be unaffected by continual immersion in wastewater containing domestic and industrial waste at a temperature of 210°F.

C. Non-submerged slide bearing type supports shall be provided with a bearing material covering a 120° arc centered at the bottom of the pipe. The Teflon shall be at least 4 inches wide at the underside of the pipe and 8 inches wide at the top of the support. The Teflon material shall be hot press bonded to 10 ga. stainless steel plates for welding to the bottom of the pipe and securing to the top of the support.

D. Submerged slide bearing type supports shall be provided with Teflon bonded to the underside of the hold down strap and the top of the pipe such that the sliding surface is formed between two sheets of Teflon. Each surface shall cover a 120° arc centered at the top of the pipe. On the underside of the strap the Teflon bearing shall be hot press bonded directly to the stainless steel strap or to a 10 ga. stainless steel plate for welding to the strap. At the top of the pipe, the Teflon shall be bonded to a 10 ga. stainless steel plate for welding to the pipe.

E. Pipe straps shall not tightly bind the pipe but shall provide 1/16 inch clearance over the top 180° of the pipe surface.

F. Wall bracket supports shall be used where shown for pipe to be installed adjacent to a wall. Where it is not feasible to install hanger supports, adjustable pipe saddle supports may be used with the permission of the Engineer. Concrete pier supports shall be spaced at a maximum distance of 10 feet and shall be at least 12” wider than O.D. of pipe and 10 inches thick unless otherwise shown on the Drawings. Refer to the Standard Detail Drawings.

G. Small diameter piping (6-inches in diameter or less) shall <u>not</u> be strapped or otherwise secured directly to walls. Suitable wall offset brackets of an approved type shall be used. Anchors shall not be attached using percussion fasteners.

H. Sliding surfaces shall be protected from accumulation of dirt, grit, or other foreign matter.

I. Slide bearings shall be capable of adequately supporting the design loads and shall be attached to pipe and supports as specified and recommended by the manufacturer.

J. The slide bearings shall be installed in the locations shown or indicated on the Drawings, at required elevations, true to orientation and level, assuring that the correct half of each bearing is in its proper position. The Contractor shall store the bearings to protect them from mechanical damage prior to installation, and shall protect the same during and after installation from contamination and damage due to placing of concrete and other materials. The Contractor shall clean the operating surfaces of bearings thoroughly before final assembly.

K. The Contractor shall note that all pipe support locations are not shown on the Drawings and shall follow the Specifications herein in locating supports. Where deviations and modifications are required, they shall be made only with the permission of the Engineer. A detailed layout of pipe supports and hangers shall be submitted for approval.

PART 3 -- EXECUTION

3.01 GENERAL INSTALLATION REQUIREMENTS

A. Support piping connections to equipment by pipe support and not by the equipment.

B. Support large or heavy valves, fittings, flow meters and appurtenances independently of the connected piping.

C. Support no pipe from the pipe above it.

D. Support piping at changes in direction or in elevation, adjacent to flexible joints, expansion joints, and couplings, and where shown.

E. The Contractor shall not install piping supports and hangers in equipment access areas or bridge crane runs.

F. Brace hanging pipes against horizontal movement by both longitudinal and lateral sway bracing.

G. Install pipe anchors (fixed supports and/or guides) where shown and/or as may otherwise be required to withstand expansion thrust loads and to direct and control thermal expansion. The Contractor may install additional pipe anchors and flexible couplings to facilitate piping installation, provided that complete details describing location, pipe supports and hydraulic thrust protection are submitted.

- END OF SECTION -

SECTION 15030 - PIPING AND EQUIPMENT IDENTIFICATION SYSTEMS

PART 1 -- GENERAL

1.01 THE REQUIREMENT

A. The Contractor shall furnish and install all components of the system for identification of piping and equipment as specified hereinafter. The system shall include the application of color coding to all new and altered plant piping. The Contractor shall paint the equipment and piping of all Contracts in the colors herein specified, and in accordance with the requirements of Section 09900, Painting.

B. In addition to the legends specified herein the Engineer may order the Contractor to furnish and install additional identification legends and arrows at no additional cost to the Owner. Such additional signs may be requested near completion of the work and shall be limited to no more than five (5) signs for each type specified herein. The legends and color combinations for additional signs shall conform to the requirements specified herein.

C. The Contractor shall submit a schedule of the colors and designations proposed in accordance with Section 01300, Submittals, and this Section. A minimum of four (4) color charts with cross-references to the colors listed herein shall be included with the Submittal.

D. Reference Section 15000, Basic Mechanical Requirements.

PART 2 -- PRODUCTS

2.01 PIPING BAND

A. All new and altered piping shall receive identification bands. Such bands shall be 6-inches wide, neatly made by masking, and spaced at intervals of 30-inches on centers regardless of the diameter of the pipe being painted. The Contractor may use approved precut and prefinished metal bands on piping, in lieu of the masked and painted bands, where approved by the Engineer.

2.02 PIPING IDENTIFICATION LEGEND

A. The Contractor shall apply identification legends to all types and sections of piping as shown on the Drawings or as designated by the Engineer. Such legends shall be in the form of plain block lettering giving the name of the pipe content in full or abbreviated form, and showing the direction of flow by arrows. All lettering and arrows shall be of the plastic snap-on type, Seton nameplate "setmarks", or equal, or they shall be formed by stenciling in an approved manner using white or black as directed and shall have an overall height in inches in accordance with the following table:

Diameter of Pipe or Pipe Covering	Height of Lettering
3/4 to 1-1/4 inches	1/2-inches
1-1/2 to 2-inches	3/4-inches
2-1/2 to 6-inches	1-1/4-inches
8 to 10-inches	2-1/2-inches
Over 10-inches	3-1/2-inches

B. Identification lettering shall be located midway between color coding bands where possible. Identification lettering and arrows shall be placed as directed by the Engineer, but shall generally be located each fifteen (15) feet in pipe length, and shall be properly inclined to the pipe axis to facilitate easy reading. In the event lettering and arrow identifications are required for piping less than 3/4-inch in diameter, the Contractor shall furnish and attach approved color coded tags where instructed.

C. Piping colors shall be as follows:

Service Type	Lettering	Base Color	
		Color	Tnemec Ref.
Finished Water	Finished Water	Dark Blue	11SF Safety Blue

- END OF SECTION -

SECTION 15060 – PVC / CPVC PIPE AND FITTINGS

PART 1 -- GENERAL

1.01 THE REQUIREMENT

A. This section includes materials, installation, and testing of chlorinated polyvinyl chloride (CPVC) pipe and fittings and polyvinyl chloride (PVC) pipe and fittings for general purpose uses and chemical systems.

B. PVC pipe shall be used for cold water applications and chemical systems within buildings, out of direct sunlight and other locations as indicated in the Pipe Schedule in the Section titled “Schedules”.

C. CPVC shall be used in process piping having a maximum operating pressure of 200 psi at a maximum operating temperature of 105 degrees Fahrenheit and a maximum operating pressure of 100 psi at a temperature of 140 degrees Fahrenheit.

1.02 RELATED WORK SPECIFIED ELSEWHERE

A. Submittals

B. General Mechanical Requirements

C. Schedules

1.03 SUBMITTALS

A. Submit shop drawings in accordance with the General Conditions.

B. Submit materials list.

C. Submit manufacturer’s recommended method of installing buried pipe. Show alignments and offsets for “snaking” buried pipe.

PART 2 -- MATERIALS

2.01 PIPE

A. CPVC Pipe: Pipe shall be Schedule 80, Type IV, Grade 1, Cell Class 24448, conforming to ASTM D 1784 and F 441.

B. PVC Pipe: Pipe shall be polyvinyl chloride, Schedule 80, Type 1, Grade 1 (Class 12454A), conforming to ASTM D 1784.

C. U.V. Protection: All pipe, whether exposed to sunlight or not, shall contain U.V. protection.

2.02 NIPPLES

A. Short nipples shall be the same material as the PVC / CPVC pipe.

2.03 FITTINGS

A. Fittings shall be Schedule 80 and shall conform to ASTM F 437 for threaded fittings and ASTM F 439 for socket-type fittings.

2.04 FLANGES

A. Flanges shall be made of the same material as the pipe. Flanges shall match the dimensions of ANSI B16.5, Class 150, steel flanges. Flanges shall be flat face.

2.05 UNIONS

A. Union shall have socket-type ends, EPDM o-rings, and shall be Schedule 80. Material shall be PVC or CPVC to match the piping.

2.06 JOINTS

A. Pipe and fittings joints shall be socket welded except where threaded and flanged joints are required to connect to unions, valves, and equipment.

B. Solvent cement for socket joints shall comply with ASTM F 493 and be NSF listed for potable water.

2.07 BOLTING AND NUTS FOR FLANGES

A. Bolts and nuts for interior flanges shall be carbon steel conforming to ASTM A 307, Grade B.

B. Bolts and nuts for buried flanges and flanges located outdoors above ground or in vaults and structures shall be Type 316 stainless steel conforming to ASTM A 193, Grade B8M for bolts, and ASTM a 194, Grade 8M for nuts. Bolts and nuts larger than 1-1/8 inch shall be steel, ASTM A 307, Grade B, with cadmium plating, ASTM A 165, Type NS.

C. Provide washers for each nut. Washers shall be of the same material as the nut.

PART 3 -- EXECUTION

3.01 GENERAL

A. Do not install PVC / CPVC pipe when the temperature is below 40 degrees Fahrenheit or above 90 degrees Fahrenheit. Store loose pipes on racks with a minimum support spacing of 3 feet. Provide shade for pipe stored outdoors or installed outdoors until the pipe is filled with water.

B. Store fittings indoors in their original cartons.

C. Store solvent cement indoors or, if outdoors, shade from direct sunlight exposure. The manufacturer of the solvent cement shall mark it with the date of manufacture. Do not use solvent cements which have exceeded their expiration date as supplied by the manufacturer. The expiration date shall not exceed two years from the date of manufacture.

D. Before installation, check pipe and fittings for cuts, scratches, gouges, buckling, kinking, or splitting on pipe ends. Remove any pipe section containing defects by cutting out the damaged section as a complete cylinder.

3.02 INSTALLATION

A. Do not drag PVC / CPVC pipe over the ground, drop it onto the ground, or drop objects on it. Cut pipe ends square and remove all burrs, chips, and fillings before joining pipe or fittings. Bevel solvent welded pipe ends as recommended by the pipe manufacturer.

3.03 SOLVENT WELDED JOINTS

A. Prior to solvent welding, remove fittings and couplings from their cartons and expose them to the air for at least one hour to the same temperature conditions as the pipe.

B. Wipe away loose dirt and moisture from the ID and OD of the pipe end and the ID of the fitting before applying solvent cement. Do not apply solvent cement to wet surfaces.

C. Make up solvent welded joints per ASTM D 2855.

D. Allow joints to fully cure – as recommended by the manufacturer – before moving solvent welded joints or subjecting the joints to any internal or external loads or pressures.

3.04 FLANGED JOINTS

A. Lubricate bolt threads with MRO solution 1000 Food Grade Antiseize, or equal before installation.

B. Tighten bolts on PVC / CPVC flanges by tightening the nuts diametrically opposite each other using a torque wrench. Complete tightening shall be accomplished in stages. The flange bolt torque values shall be as recommended by the pipe manufacturer.

3.05 THREADED JOINTS

A. Cut threaded ends on PVC / CPVC to the dimensions of ANSI B2.1. Ends shall be square cut. Follow the pipe manufacturer's recommendations regarding pipe holddown methods, saw cutting blade size, and saw cutting speed.

B. Pipe or tubing cutters shall be specifically designed for use on PVC / CPVC pipe. Use cutters manufactured by Reed Manufacturing Company, Ridge Tool Company, or equal.

C. If a holddown vise is used when the pipe is cut, insert a rubber sheet between the vise jaws and the pipe to protect from scratching the pipe.

D. Thread cutting dies shall be clean and sharp and shall not be used to cut materials other than plastic.

E. Apply Teflon thread compound or Teflon tape lubricant to threads before screwing on the fitting.

3.06 INSTALLING UNIONS

A. Provide unions on exposed piping 3 inches and smaller as follows:

1. Provide a union at every change in direction (horizontal and vertical).

2. Provide a union 6 to 12 inches downstream of valves.

3. Provide a union every 40 feet in straight piping runs.

4. Near threaded connections to mechanical or piping equipment.

5. Where shown on the drawings.

3.07 INSTALLING BURIED PIPE

A. Trench bottom shall be continuous, smooth, and free of rocks. See the details on the drawings for trench dimensions, pipe bedding, and backfill.

B. After the pipe has been solvent welded and the joints have set, snake the pipe in the trench per the pipe manufacturer's recommendations in order to allow for thermal expansion and contraction of the pipe.

C. Do not backfill the pipe trench until the solvent welded joints have set. Support the pipe uniformly and continuously over its entire length on firm, stable soil. Do not use blocking to change pipe grade or to support pipe in the trench.

D. Install buried PVC / CPVC pipe in accordance with ASTM D 2774 and the pipe manufacturer's recommendations. Backfill materials in the zone between the trench bottom and to a point 8 inches above the top of the pipe shall be imported fill per Section entitled "Excavation and Backfill for Utilities". Compact by means of vibratory equipment or by flooding. Apply backfill in layers having a maximum thickness of 8 inches. If water flooding is used, do not add successive layers unless the previous layer is compacted to 90% relative compaction.

3.08 INSTALLING ABOVEGROUND PIPE

A. Install pipe on pipe hangers and supports as detailed on the drawings and as specified in Section entitled "Pipe Supports". Install pipe without springing, forcing, or stressing the pipe or the adjacent valves and equipment to which the pipe is connected.

3.09 PAINTING AND COATING

A. Coat piping per Section entitled "Painting".

3.10 HYDROSTATIC TESTING

A. Perform hydrostatic testing for leakage in accordance with requirements set forth in Section entitled “Pipeline Testing and Disinfection”.

- END OF SECTION -

SECTION 15095 - VALVES, GENERAL

PART 1 -- GENERAL

1.01 THE REQUIREMENT

A. The Contractor shall furnish and install, complete with all assemblies and accessories, all valves shown on the Drawings and specified herein including all fittings, appurtenances and transition pieces required for a complete and operable installation.

B. All valves shall be constructed of first quality materials which have strength, wearing, and corrosion resistance characteristics entirely suitable for the types of service for which the individual valves are designated. Except where noted otherwise, valves designated for water service shall conform to pertinent sections of the latest revision of AWWA C500 Specifications. Cast iron valve bodies and parts shall meet the requirements of the latest revision of ASTM Designation A-126, "Standard Specifications for Gray Iron Castings for Valves, Flanges, and Pipe Fittings, Class B."

C. All valve body castings shall be clean, sound, and without defects of any kind. No plugging, welding, or repairing of defects will be allowed.

D. Valves shall have flanged ends for exposed service and mechanical joint ends for buried service, unless otherwise shown on the Drawings or specified herein. Flanged ends shall be flat-faced, 125 lb. American Standard unless otherwise shown or specified in accordance with ANSI B16.1. All bolt heads and nuts shall be hexagonal of American Standard size. The Contractor shall be responsible for coordinating connecting piping. Valves with screwed ends shall be made tight with Teflon tape. Unions are required at all screwed joint valves.

1.02 SUBMITTALS

A. The Contractor shall furnish to the Owner, through the Engineer, a Performance Affidavit where required in individual valve specifications, utilizing the format specified in Section 11000, Equipment General Provisions. Performance tests shall be conducted in accordance with the latest revision of AWWA C500 and affidavits shall conform to the requirements of the Specifications

B. Shop Drawings conforming to the requirements of Section 01300, Submittals, are required for all valves, and accessories. Submittals shall include all layout dimensions, size and materials of construction for all components, information on support and anchoring where necessary, pneumatic and hydraulic characteristics and complete descriptive information to demonstrate full compliance with the Documents. Shop Drawings for electrically operated/controlled valves shall include all details, notes, and diagrams which clearly identify required coordination with the electrical power supply and remote status and alarm indicating devices. Electrical control schematic diagrams shall be submitted with the Shop Drawings for all electrical controls. Diagrams shall be drawn using a ladder-type format in accordance with JIC standards. Shop Drawings for pneumatically operated/controlled

valves shall include all details, notes, and diagrams which clearly identify required coordination with the compressed air (service air) system and electrical controls.

C. Operation and maintenance manuals and installation instructions shall be submitted for all valves and accessories in accordance with the Specifications. The manufacturer(s) shall delete all information which does not apply to the equipment being furnished.

1.03 CONTRACTOR'S RESPONSIBILITIES

A. The Contractor shall provide the services of a qualified representative of the manufacturer(s) of the equipment named below to check out and certify the installation(s), to supervise the initial operation, and to instruct the Owner's operating personnel in proper operation and maintenance procedures in accordance with the following schedule:

Item	Valve/Operator Type	Minimum On-Site Time Requirements
1.	Automatic Control Check Valve	One (1) 8-hour day
2.	Surge Anticipators	One (1) 8-hour day
3.	Motor Operated Modulating Valves	One (1) 8-hour day
4.	Motor Operated Open-Close Valves (required only if manufacturer is other than for Item 3 above)	One (1) 8-hour day
5.	Pneumatic Hydraulic Cylinder Operated Valves	One (1) 8-hour day

B. Any additional time required to achieve successful installation and operation shall be at the expense of the Contractor. The manufacturer's representative shall sign in and out at the office of the Engineer's Resident Project Representative on each day he is at the project.

C. A written report covering the representative's findings and installation approval shall be mailed directly to the Engineer covering all inspection and outlining in detail any deficiencies notes.

D. The times specified are exclusive of travel time to and from the facility and shall not be construed as to relieve the manufacturer of any additional visits to provide sufficient service to place the equipment in satisfactory operation.

PART 2 -- PRODUCTS

2.01 FLOW INDICATORS

A. Flow indicators shall be the Akron ball-type as manufactured by Brooks Instrument Co., Fischer and Porter, or equal, and shall have bronze bodies, glass dome, and plastic ball.

2.02 CORPORATION STOPS

A. Corporation stops shall be of bronze with tapered male iron pipe threads on inlets and outlets. Terminal outlets shall have screwed bronze hex head dust plugs or caps. Unions shall be used on all corporation stop outlets with connecting piping. Corporation stops shall have a minimum working pressure rating of 250 psi and shall be as manufactured by Mueller Co., Hays Mfg. Div. of Zurn Industries, or equal.

2.03 FLOOR BOXES

A. Floor boxes shall be provided for all nut operated or floor accessed valves. Floor boxes shall be of the adjustable, sliding type, cast iron, suitable to withstand heavy traffic, as manufactured by James B. Clow & Sons, Kennedy Valve Mfg. Co., or equal. The covers shall be marked with appropriate designations of piping contents (i.e.: water, sewer) and bases shall be the round type. All nut operated valves in this Section shall be clearly identified by stainless steel or laminated plastic identification tags. The tags shall be permanently affixed to the inside of the floor boxes, under grating, etc. and shall bear the embossed letters which clearly identify each valve by its appropriate designation.

B. Two (2) valve operating wrenches shall be supplied in 4 foot lengths with tee handles for each size nut supplied. Valve wrenches shall be Model No. F-2520 as manufactured by James B. Clow & Sons, Kennedy Valve Mfg. Co., Figure No. 122, or equal.

2.04 VALVE BOXES

A. The Contractor shall furnish and install valve boxes as shown on the Drawings and specified herein.

B. All valve boxes shall be placed so as not to transmit shock or stress to the valve and shall be centered and plumb over the operating nut of the valve. The ground in the trench upon which the valve boxes rest shall be thoroughly compacted to prevent settlement. The boxes shall be fitted together securely and set so that the cover is flush with the finished grade of the adjacent surface. A concrete pad as detailed on the Drawings shall be provided around the valve box, sloped outwards.

C. All valve boxes shall be 2-piece cast iron, sliding type, 5-1/4" shaft, with heavy duty traffic weight collar and the lid marked with the appropriate carrier product (i.e.: WATER). Boxes shall be as manufactured by James B. Clow & Sons, Kennedy Valve Mfg. Co., Charlotte Pipe and Foundry Company, or equal.

2.05 STRAINERS

A. Y-Strainers shall be Y-pattern cast iron body, flanged or screwed ends with stainless steel or Monel, 20 mesh strainers. Strainers shall be 200 psi, cold-water service strainers, as manufactured by WATTS, Crane Co., Zurn, or equal.

B. Caustic service Y-strainers shall be provided as shown on the drawings. Strainers shall be full port-full flow design manufactured of 304 or 316 stainless steel body. Y-strainers shall be furnished with flanged ends. The strainer screen shall be 1/32-inch perforation, easily removable, manufactured of the same material as the valve body.

C. Stainless steel Y-strainers shall be provided as shown on the drawings. Strainers shall be full port-full flow design manufactured of 304 or 316 stainless steel body. Y-strainers shall be furnished with flanged ends. The strainer screen shall be 1/32-inch perforation, easily removable, manufactured of the same material as the valve body.

D. PVC and CPVC y-strainers shall be provided in PVC and CPVC piping and as shown on the Drawings. Strainer shall be provided with PVC or CPVC body and end cap, EPDM or Viton seal as required for the chemical service, and 20 mesh screen. Temperature rating shall be 30°F to 140°F, and pressure rating shall be 150 psi @ 70°F, non-shock. PVC and CPVC y-Strainers shall be as manufactured by Asahi/America, Hayward, or equal.

E. Manually cleaned strainers shall be the duplex basket tapered plug type.

1. Strainers 3-inches in diameter and larger shall have flanged ends conforming to ANSI B16.1-125/150 pound standard.

2. Strainers less than 3-inches in diameter shall have screwed end connectors, unless otherwise shown on the Drawings.

3. Strainers shall be constructed with an ASTM A48, Class 30 cast iron body, ductile iron trim, removable 0.045 inch staggered hole perforation, 304 stainless steel filter baskets and gauges on the inlet and outlet.

4. All strainers shall be suitable for 125 psi service.

5. Switching flow from one basket to the other shall be accomplished by moving the handle through a 180° arc. The switching operation shall not stop flow through the strainer and shall provide for on-line removal of either basket with the other basket functional. The plug shall be automatically positioned with integral stops and shall be easily lifted and reseated under pressure.

6. The strainer shall be designed to minimize the possibility of material bypassing the plug while being rotated and to prevent debris from building up under the plug. The strainer covers shall be designed for quick opening with swing away yoke.

7. Each basket compartment shall have a side drain outlet.

8. All strainers shall be provided with support legs.

9. Duplex basket strainers shall be similar to the Model 53BTX as manufactured by Hayward, or equal.

F. PVC and CPVC simplex basket strainers shall be provided in PVC and CPVC piping as shown on the Drawings. 1/2”-4” strainers shall be one-piece molded body with (3) ports to facilitate straight-thru flow pattern or u-shape flow pattern as required. Connections shall be true union type to ease installation/future maintenance. The cover, vent plug, and drain plug shall all be hand-removable, requiring no tools. EPDM or Viton seals shall be used as required for chemical service, and internal baskets shall be 1/32” perforation (20-mesh) for 1/2”-1” sizes, and 1/8” perforation for 1-1/2”-8” sizes. 6” and 8” strainers shall

be fabricated construction and shall contain flanged connections as standard. The pressure rating for 1/2”-8” sizes shall be 150 psi @ 70°F, non-shock. Strainers shall be manufactured by Hayward Industrial Products, or equal.

2.06 QUICK DISCONNECT COUPLINGS

A. Quick disconnect type coupling for compressed/service air shall be provided where indicated on the Drawings. Coupling shall provide for instantaneous shutoff in socket end when lines are disconnected. Couplings shall be constructed of 316 stainless steel with a BUNA-N O-ring and integral safety lock. Couplings shall comply with Military Specification 4109 (interchangeable with standard plug of the same size).

2.07 BACKFLOW PREVENTERS

A. Backflow preventer shall be the size shown on the Drawings and shall be of the double check valve principle. Backflow preventer installation shall include isolation valves and four test cocks, furnished as an assembly. For backflow preventers less than 2-1/2", the installation assembly also shall include a strainer. Isolation valves for backflow preventers shall be ball valves, except for size 2-1/2" and larger which shall be resilient seat gate valves. Test cocks shall be located as recommended by the manufacturer to facilitate functional testing of the assembly. The backflow preventer shall be a WATTS 709, or equal.

B. Reduced Pressure Backflow Preventer shall be of the size shown on the Drawings, and shall be of the reduced pressure principle type in accordance with AWWA Standards C510 and C511, with two (2) independent operating spring loaded check valves and one (1) spring loaded, diaphragm actuated, differential pressure relief valve shall be installed between the check valves. Backflow preventer shall be bronze body construction, with EPT rubber discs and Buna-N and nylon diaphragm. Screws and springs shall be of stainless steel. End connections shall be screwed, unless otherwise specified or shown on the Drawings. Reduced pressure backflow preventer installations shall include isolation valves and four test cocks, furnished as an assembly. For reduced pressure backflow preventers less than 2-1/2" the installation assembly also shall include a strainer. Isolation valves for reduced pressure backflow preventers shall be ball valves, except for sizes 2-1/2" and larger which shall be resilient seat gate valves. Test cocks shall be located as recommended by the manufacturer to facilitate functional testing of the assembly. The reduced pressure backflow preventer shall be as manufactured by Beeco Division, Hersey Products Inc., Aergap Model 6CM, WATTS 909, or equal.

PART 3 -- EXECUTION

3.01 INSTALLATION

A. Except where noted otherwise herein, all valves shall be installing and tested in accordance with the latest revision of AWWA C500. Before installation, all valves shall be lubricated, manually opened and closed to check their operation and the interior of the valves shall be thoroughly cleaned. Valves shall be placed in the positions shown on the Drawings. Joints shall be made as directed under the Piping Specifications. The valves

shall be so located that they are easily accessible for operating purposes, and shall bear no stresses due to loads from the adjacent pipe. The Contractor shall be responsible for coordinating connecting piping.

B. All valves shall be tested at the operating pressures at which the particular line will be used. Any leakage or "sweating" of joints shall be stopped, and all joints shall be tight. All motor operated and cylinder operated valves shall be tested for control operation as directed by the Engineer.

C. Provide valves in quantity, size, and type with all required accessories as shown on the Drawings.

D. Install all valves and appurtenances in accordance with manufacturer's instructions. Install suitable corporation stops at all points shown or required where air binding of pipe lines might occur. Install all valves so that operating handwheels or wrenches may be conveniently turned from operating floor but without interfering with access, and as approved by Engineer. Unless otherwise approved, install all valves plumb and level. Valves shall be installed free from distortion and strain caused by misaligned piping, equipment or other causes.

E. Valve boxes shall be set plumb, and centered with the bodies directly over the valves so that traffic loads are not transmitted to the valve. Earth fill shall be carefully tamped around each valve box to a distance of 4 feet on all sides of the box, or to the undisturbed trench face, if less than 4 feet.

3.02 SHOP AND FIELD TESTING

A. Shop and field testing of valves shall be as follows:

1. Certified factory testing shall be provided for all components of the valve and operator system. Valves and operators shall be shop tested in accordance with the requirements in the latest revision of AWWA C500, including performance tests, leakage test, hydrostatic tests, and proof-of-design tests. The manufacturer through the Contractor shall submit certified copies of the reports covering the test for acceptance by the Engineer.

2. Shop testing shall be provided for the operators consisting of a complete functional check of each unit. Any deficiencies found in shop testing shall be corrected prior to shipment. The system supplier through the Contractor shall submit written certification that shop tests for the electrical/pneumatic system and all controls were successfully conducted and that these components provide the functions specified and required for proper operation of the valve operator system.

3. The Contractor shall conduct field tests to check and adjust system components, and to test and adjust operation of the overall system. Preliminary field tests shall be conducted prior to start-up with final field tests conducted during start-up. The factory service representative shall assist the Contractor during all field testing and prepare a written report describing test methods, and changes made during the testing, and summarizing test results. The service representative shall certify

proper operation of the valve operator system upon successful completion of the final acceptance field testing.

4. Preliminary and final field tests shall be conducted at a time approved by the Engineer. The Engineer shall witness all field testing.

5. All costs in connection with field testing of equipment such as energy, light, lubricants, water, instruments, labor, equipment, temporary facilities for test purposes, etc. shall be borne by the Contractor. The Contractor shall be fully responsible for the proper operation of equipment during tests and instruction periods and shall neither have nor make any claim for damage which may occur to equipment prior to the time when the Owner formally takes over the operation thereof.

6. Preliminary field tests shall be conducted prior to start-up and shall include a functional check of the entire valve operator system and all system components. Preliminary field tests shall demonstrate that the valve operator system performs according to specifications and that all equipment, valves, controls, alarms, interlocks, etc., function properly. The preliminary field test report must be approved by the Engineer prior to conducting final field acceptance tests. Based on results of preliminary field tests, the Contractor shall make any adjustments required to settings, etc., to achieve the required valve closing time and operation specified or otherwise directed by the Engineer.

7. Final field acceptance tests shall be conducted simultaneously with the start-up and field testing of the pumps, air compressors, process air blowers, etc. Field tests shall be conducted for the full range of operating modes and conditions specified and as directed by the Engineer. Each of the valves shall be tested at minimum, maximum, and normal head/flow conditions, and under all specified conditions of opening and closing. Performance of pneumatic valves and compressed air system under normal operating conditions and during simulated power failures shall be checked.

8. Field testing shall include optimization of opening and closing times of the valves. The Contractor shall provide the means for accurate measurement of pipeline pressures as directed by the Engineer. Valve opening and closing times shall be adjusted based on process requirements to optimize operation of the valves. Final valve opening and closing times as determined by field tests shall be approved by the Engineer prior to final acceptance of the system.

- END OF SECTION -

SECTION 15100 - VALVE OPERATORS AND ELECTRIC VALVE ACTUATORS

PART 1 - GENERAL

1.01 THE REQUIREMENT

A. Equipment shall be provided in accordance with the requirements of Section 11000 – Equipment General Provisions and Section 15000 – Basic Mechanical Requirements.

B. Reference Section 15390 – Schedules for additional information on valves and operators/actuators.

C. The electric valve actuators shall meet the signal requirements described in Section 17060 – Signal Coordination Requirements, Section 17920 – Control System Input/Output Schedule, and Section 17950 – Functional Control Descriptions.

D. Valve operators and electric valve actuators shall be designed to unseat, open or close, and seat the valve under the most adverse operating condition to which the valves will be subjected.

E. Operator mounting arrangements shall be as indicated on the Drawings or as directed by the manufacturer and/or Engineer. There shall be no mounting restrictions on the electric valve actuator.

F. The valve operators and electric actuators shall be the full and undivided responsibility of the valve manufacturer in order to ensure complete coordination of the components and to provide unit responsibility.

1.02 SUBMITTALS

A. The following items shall be submitted with the Shop Drawings in accordance with, or in addition to the submittal requirements specified in Section 01300, Submittals; and Section 11000, Equipment General Provisions:

1. A Performance Affidavit shall be submitted for electric actuators in accordance with Section 11000, Equipment General Provisions.

2. Certification that the force required to operate all valves is as specified herein.

PART 2 -- PRODUCTS

2.01 GENERAL

A. Electric actuators shall be provided where specified in the Valve Schedule in Section 15390 – Schedules.

B. Manual operators shall be provided on all valves which do not receive electric actuators. Manual operator type shall be as specified herein and as shown on the Drawings.

C. Quarter turn valves 6-inches and greater in size shall have geared operators. Gate valves 14” and greater in size shall have geared operators.

D. Operators/actuators shall be furnished with conservatively sized extension bonnets, extension stems, or torque tubes, and all required appurtenances required for a complete installation. Operators furnished with extension bonnets shall include stainless steel extension stems, or stainless steel torque tubes.

2.02 MANUAL OPERATORS

A. Unless otherwise specified or shown on the Drawings, manual operator type shall be as follows:

1. Buried valves shall be equipped with nut operators, extended stems, and valve boxes. Where the depth of the operating nut is more than 4 feet below finish grade, a valve operator extension shall be provided to bring the operating nut to within 18-24 inches of the surface.

2. Exposed valves up to 4-inch shall be lever operated (except gate valves).

3. Exposed valves 6-inches and larger shall be handwheel operated.

4. Exposed gate valves shall be handwheel operated.

5. Valves with centerline of operator located more than 6-feet above the floor or platform from which it is to be operated shall have a chainwheel operator, unless otherwise indicated on the Drawings.

B. Manual operators shall be rigidly attached to the valve body unless otherwise specified or shown on the Drawings.

C. All operators shall turn counter-clockwise to open and shall have the open direction clearly and permanently marked.

D. Valve operators shall be designed so that the force required to operate the handwheel, lever, or chain (including breakaway torque requirements) does not exceed 80 pounds applied at the extremity of handwheel or chainwheel operator. Design pressures for sizing of valve operators shall be the piping test pressure for the piping in which the valve is to be installed as shown in the Piping Schedule in Section 15390 – Schedules.

E. Handwheels for valves operators shall not be less than 12 inches in diameter. The maximum diameter of any handwheel shall not exceed 24”.

F. Nut operators shall have standard 2-inch square AWWA operating nuts designed in accordance with AWWA C504-94.

G. Geared manual operators shall be of the worm gear, traveling nut or scotch yolk type except manual operators for butterfly valves 18-inch in diameter or larger which shall be worm gear, unless otherwise indicated in the individual valve specification. Gear

operators shall be of the worm gear or bevel gear type. Gear box designs incorporating end of travel stops in the housing shall be equipped with AWWA input stops. Each gearbox shall require a minimum of 10 turns for 90 degree rotation or full valve stem travel and shall be equipped with a mechanical valve position indicator.

H. Manual operators on below grade (and vault installed) valves shall be permanently lubricated and watertight under an external water pressure of 10 psi.

2.03 ELECTRIC VALVE ACTUATORS

A. Not Used.

PART 3 -- EXECUTION

3.01 INSTALLATION

A. All valve actuators shall be installed in accordance with the manufacturer's published recommendations and the applicable specification sections for valves, and motor controls.

B. Valve actuators shall be factory coated in accordance with the manufacturer’s standard paint system.

- END OF SECTION -

SECTION 15105 - CHECK VALVES

PART 1 -- GENERAL

1.01 THE REQUIREMENT

A. The CONTRACTOR shall furnish and install check valves, complete and operable, as shown and specified herein, including epoxy coating, appurtenant and accessories, all in accordance with the requirements of the Contract Documents.

1.02 RELATED WORK SPECIFIED ELSEWHERE

A. Section 15095 – Valves, General

PART 2 -- PRODUCTS

2.01 TILTING DISC CHECK VALVES

A. Construction:

1. The body shall be heavy two-piece cast or ductile iron.

2. The two body halves and body seal shall be O-ring sealed and bolted together in a manner to sandwich the body seat on 55° angle. Each body half shall have an access hole and cover for internal inspection. Each body half and disc shall be fully machined and shall be furnished complete with a top mounted oil dash pot with adjustable dampening.

3. End Connections: Flanged, ASME B16.1 Class 125

4. The seat ring and disc ring shall be of a design that permits replacement in the field without need for special tools or machining.

5. The pivot pins in the body and the bushings in the disc lugs shall be stainless steel, but of different hardness to prevent galling. The bushings shall be press fit to prevent wear.

6. An indicator shall be provided to show the position of the disc.

7. The area throughout the valve body shall be equal to full pipe area. The area through the seat section shall be 40% larger than the inlet and outlet of the valve to achieve the lowest possible head loss.

B. Materials: Valve materials shall be manufacturer's standard suitable for potable water.

C. Dashpot:

1. Each valve shall have a top mounted oil dashpot to control opening and closing cycle of the valve to prevent surge and water hammer.

2. The dashpot must be a self-contained oil system, separate and independent from the water line medium incorporating a double-acting hydraulic cylinder connected to two oil reservoirs through adjustable flow control valves.

3. The reservoir connected to the upper end of the cylinder shall be sealed to contain pressure (air over oil) and be equipped with a pressure gauge and air valve.

4. The reservoir connected to the lower end of the cylinder shall be open to atmosphere through an air breather cap.

5. The dashpot shall provide adjustable control of the valve opening rate.

6. The valve closing rate shall be controlled in two stages: 1) a rapid rate for approximately 90 percent of the stroke; and 2) a slow rate for the final closure controlled by a cushion valve in the hydraulic cylinder.

E. Manufacturers, or equal:

1. APCO
2. Val-Matic
3. Crispin

PART 3 -- EXECUTION

3.01 GENERAL

A. All valves shall be installed in accordance with provisions of Section entitled “Valves, General”.

B. Exterior Prime Coat: Shop prime coat certified to NSF-61 Approved for Potable Water Contact and compatible with the coating system specified in Section titled "Painting".

C. Field Coatings: All valve exteriors shall be painted as specified in the Section titled "Painting".

D. Interior Coatings: All exposed interior corrosive ferrous surfaces of valves 4 inches and larger shall receive a shop applied fusion bonded epoxy coating conforming to AWWA C550.

- END OF SECTION -

SECTION 15106 - BALL VALVES

PART 1 -- GENERAL

1.01 THE REQUIREMENT

A. The CONTRACTOR shall furnish and install ball valves, complete and operable, as shown and specified herein, including epoxy coating, appurtenances, operators, and accessories, all in accordance with the requirements of the Contract Documents.

1.02 RELATED WORK SPECIFIED ELSEWHERE

A. Submittals

B. Painting

1.03 SUBMITTALS

A. Shop Drawings: Submit shop drawings in accordance with the section entitled "Submittals." The shop drawings shall include the following:

1. Manufacturer's standard literature.

2. Dimension drawings for all valves to be supplied.

3. Valve manufacture's recommended instructions for joining the valves and piping.

B. Operation and Maintenance Manuals: Submit shop drawings in accordance with the section entitled "Submittals." The shop drawings shall include the following:

1. Manufacturer's standard literature.

2. Dimension drawings for all valves to be supplied.

3. Valve manufacture's recommended instructions for joining the valves and piping.

PART 2 -- PRODUCTS

2.01 PLASTIC BALL VALVES

A. Plastic ball valves shall be used at all PVC/CPVC pipe installations where required, and be made of polyvinyl chloride (PVC) or chlorinated polyvinyl chloride (CPVC) as recommended by the manufacturer for any specific applications. PVC/CPVC shall meet ASTM D 1784. PVC shall be Class 12454-B or better. CPVC shall be Class 23447-B or better. All valves shall have manual operators, unless otherwise specified or shown.

B. All plastic ball valves shall have socket true union ends or flanged ends to ANSI B 16.5, class 150, for easy removal. The balls shall have full size ports and PTFE seats and shall

be polished free of any imperfections. PTFE seats shall have elastomeric backing cushion of the same material as the valve seals. All body seals, union O-ring seals, and stem seals shall be Viton or equal. The valves shall be suitable for a maximum working non-shock pressure of 230 psi at 73 degrees F for sizes ½' through 2" and 150 psi at 73 degrees F for sizes 2 ½" through 6 inch. The handle shall incorporate a tool for adjustment of the seat carrier.

C. Manufacturers or equal

1. ASAHI-America

2. IPEX

3. Plast-o-matic

2.02 STAINLESS STEEL BALL VALVES

A. Materials: Ball valves for use with stainless steel piping systems, including instrument isolation, air lines, and moisture drains and at all other locations shown on the drawings shall be 316 stainless steel body and trim.

A. Body Type: two or three piece design

B. Ends: flanged or threaded connections as required.

C. Seats and seals: Teflon

D. Ball: no internal ring for the ball shall be acceptable

E. Class: 150 or 300 as noted on Drawings and Schedules

F. Ball valves

G. Manually operated valves of 4-inch size and larger shall have right-angle gear type operators with handwheel. Manually operated valves of 2-inch size and larger that require proximity position switches shall have right-angle gear operators except that such valves may have lever operators through 3-inch size where the valve manufacturer offers compatible valve, operator and proximity switch units. The mounting of right-angle gear operators shall conform to ISO 5211.

H. Valves used as moisture drain valves shall be installed at low points of the line and piped to drain.

H. Manufacturers:

1. 'Apollo' Valves manufactured by Conbraco Industries, Inc.

2. FNW Valve (Ferguson Enterprises, Inc.)

3. Jamesbury Corporation

4. NIBCO

5. Valen, Inc.

PART 3 -- EXECUTION

3.01 GENERAL

A. All valves shall be installed in accordance with provisions of section entitled "Valves, General". Care shall be taken that all valves in plastic lines are well supported on each end of the valve.

B. All valves shall be tested for unidirectional or bi-directional shut-off as required by service conditions.

- END OF SECTION -

SECTION 15108 - GATE VALVES

PART 1 -- GENERAL

1.01 THE REQUIREMENT

A. Reference Section 15000, Basic Mechanical Requirements.

PART 2 -- PRODUCTS

2.01 GATE VALVES

A. General: All valves, unless otherwise specified, shall be the product of one manufacturer.

B. Gate Valves up to 12-inch Diameter: Comply with AWWA C515, titled "Reduced-Wall, Resilient-Seated Gate Valves for Water Supply Service".

C. Gate Valves up to 14-inch Diameter and Larger: Comply with AWWA C515, titled "Reduced-Wall, Resilient-Seated Gate Valves for Water Supply Service".

D. Stem Material: Manufacturer's standard.

E. Stem Style:

1. All above-ground valves shall be rising-stem (outside screw and yoke) type.

2. All below-ground valves shall be non-rising-stem type

F. Gaskets and O-Rings: EPDM, no substitution.

G. Standards: Valves shall be certified to the following:

1. NSF/ANSI 61 titled "Drinking Water System Components – Health Effects"

2. NSF/ANSI 372 titled ""Drinking Water System Components – Lead Content"

H. Operating Nuts: Operating nuts shall be AWWA 2-inch square with skirts and open by turning the nut counter clockwise.

I. Bevel Gear: Gate valves shall be suitable for horizontal installation for buried service, where needed for clearance and at locations indicated on the Drawings. Provide bevel gear for horizontal installation.

J. Buried Service Ends: Unless indicated otherwise on the Drawings, buried service valves shall have mechanical joint ends.

K. Above Grade Service Ends: Unless indicated otherwise on the Drawings, above ground valves shall have flanged joints. Flanges shall be Class 125 per ANSI/ASME B16.1 or Class 150 per ANSI/ASME B16.5.

L. Factory Applied Coatings for Water Service Valves:

1. Valve interior and exterior shall have a fusion-bonded epoxy coating that is applied prior to assembly.

2. The bolt holes and body-to-bonnet flange surfaces shall be fully epoxy coated.

3. Coatings shall comply with NSF/ANSI Standard 61, titled “Drinking Water System Components – Health Effects”.

4. Coatings shall comply with ANSI/AWWA C550, titled “Protective Interior coatings for Valves and Hydrants”.

5. Factory applied exterior coating shall be compatible with the final coating system specified in Section titled "Painting".

M. Manufacturer, or Equal:

1. American Cast Iron Pipe Company

2. Mueller

3. American AVK Company

PART 3 -- EXECUTION

3.01 GENERAL

A. All valves shall be installed in accordance with provisions of Section entitled “Valves, General”.

B. Valves shall be installed such that valve operating shafts shall be parallel to the pump shaft.

C. Field Coatings: All valve exteriors shall be painted as specified in the Section titled "Painting".

- END OF SECTION -

SECTION 15114 - MISCELLANEOUS VALVES AND APPURTENANCES

PART 1 -- GENERAL

1.01 THE REQUIREMENT

A. The Contractor shall furnish and install miscellaneous valves as shown and as specified herein, complete and operable including protective coatings, appurtenant work and operators, all in accordance with the requirements of the Contract Documents.

1.02 RELATED WORK SPECIFIED ELSEWHERE

A. Section 15095 – Valves, General

PART 2 -- PRODUCTS

2.01 CORPORATION STOPS

A. Unless otherwise shown, corporation stops shall be made of solid brass for key operation, with screwed ends with corporation thread or iron pipe thread, as required.

B. Suppliers, or Equal:

1. Ford Meter Box Company
2. James Jones Company
3. Mueller Company

2.02 SERVICE SADDLES

A. Service pipe saddle shall fit to the maximum O.D. of the saddle's range, and extend a minimum of 160 degrees around the pipe. When the saddle is used on pipe to the minimum pipe size of the range, the saddle shall extend 180 degrees around the pipe. Straps shall have ends chamfered and be provided with Class 2 fit, National Coarse Threads. Saddle casting shall be ductile iron, double strap and shall have asphaltic coating. Straps shall be stainless steel. Valve gaskets shall be self sealing, neoprene except for chlorine lines which shall be viton.

2.03 BACKFLOW PREVENTERS

A. Backflow preventers shall be of the reduced pressure assembly type and shall contain two spring loaded check valves and one spring loaded, diaphragm actuated, differential pressure relief valve. The unit shall include tightly closing shut-off valves located at each end of the device and shall be fitted with properly located test cocks. Operation shall be completely automatic. All parts shall be removable or replaceable without removal of the

unit from the line. All materials shall be protected against corrosion. The backflow preventer shall be Febco Model 825Y or equal.

2.04 SMALL NEEDLE VALVES

A. Small needle valves shall be bronze, rising bronze stem, Class 200, globe style needle valve with threaded end connections conforming to Federal Specifications WW-V-51 Class C Type 1 (Globe) for nominal pipe sizes up to one (1) inch.

B. Small needle valves shall be Model No. 88 by Crane, No. 180 by Powell, No. 120 by Walworth or equal.

2.05 SOLENOID VALVES (LIQUID SERVICE)

A. The solenoid valves shall be 2-way or 3-way, as required, with a NEMA 4X watertight, dust-tight, corrosion resistant enclosure. They shall be of the type that is normally closed, energized to open, closed on failure, and can be opened manually on failure. Plunger assembly (plunger and tube) shall be 316 stainless steel. Disc shall be Viton or Teflon. Valves shall have a molded epoxy resin Class B temperature range coil for continuous duty an a NEMA 4X watertight coil housing. Solenoid valves shall be suitable for operation on a 24 VDC power supply and shall be as manufactured by Automatic Switch Co., Magnatrol Corp., or equal.

B. Each valve shall be installed with a strainer upstream. Strainer shall be rated for 200 psi C.W.P. and shall be Model No. 988 1/2 by Crane, No. 3699 1/2 Walworth or equal.

C. Provide a suitably sized gate or ball valve to blow off the strainer screen on each unit installed.

2.06 TAPPING VALVE AND SLEEVE

A. Tapping Valve: The tapping valves shall conform to the applicable requirements of ANSI/AWWA C500. Valves shall be installed as shown on the Drawings and shall be designed for 150 psi working pressure. Valve body shall be cast iron ASTM A 126, Class B or ductile iron ASTM A 395 or A 536. Valves shall have a bronze, double disc, a non-rising stem and parallel or inclined seats. Stem seal material shall be EPDM; suitable for the pipeline fluid and operating conditions. The valve shall open counter clockwise and have enclosed bevel gears, track rollers and scrapers and a standard bypass valve. The inlet shall be ANSI sized to match the tapping sleeve. The outlet shall be a mechanical joint connection. The valves shall be as manufactured by Mueller, American, or equal.

B. Tapping Sleeve: Tapping sleeves shall be of cast iron, designed to withstand a working pressure of at least 150 psig. Tapping sleeves shall fit the existing lines as shown on the Drawings. The Contractor shall field verify the material and diameter of the existing lines to be tapped prior to ordering the sleeve. Tapping sleeves shall have mechanical joint ends and shall be provided complete with all necessary split-end gaskets, longitudinal gaskets and two-piece (split) glands. Gaskets shall be shipped to the job site separately in suitable protective container. Materials for split-end gaskets shall conform to ANSI

A21.11. Material for longitudinal gaskets shall be neoprene conforming to ANSI A21.11. Double sets of gaskets shall be provided to fit existing pipe.

C. Tapping sleeves shall be provided complete with all necessary bolts and nuts to join or connect the two halves of the sleeve together. Bolts and nuts shall be standard steel square of hex head bolts and nuts which have been hot dip galvanized or the same as for the tapping valve as specified hereinabove.

D. The tapping valve and sleeve shall be as manufactured by Mueller Co., American, or equal.

E. Tapping and line stopping services shall be by Rangeline Tapping Services, Inc.; T.D. Williamson, Inc. or equal.

2.07 LINE STOP TAPPING AND PLUGGING EQUIPMENT

A. Tapping sleeves for line stops shall include blind flange, studs, nuts, gaskets, completion plug and all accessories for closing the tap after the line stop has been removed.

B. The line stop shall consist of a mechanical plug inserted into the existing pipe by a plugging or tapping machine. The plug shall temporarily isolate the flow in the line to allow bypass and shall be removed and replaced with a completion plug and blind flange after the line stopping operation is completed.

C. Tapping sleeves and line stop plug shall be as manufactured by Rangeline Tapping Services, Inc.; T.D. Williamson, Inc. or equal.

2.09 AIR-VACUUM AND AIR-RELEASE VALVES

A. Air-Vacuum and Air-Release Valves: Air and vacuum valves shall be capable of venting large quantities of air while pipelines are being filled, and allowing air to re-enter while pipelines are being drained. They shall be of size indicated, with flanged or screwed ends to match piping. Bodies shall be of high-strength cast iron or CF8M stainless steel as specified. The float, seat, and all moving parts shall be constructed of Type 316 stainless steel. Seat washers and gaskets shall be of a material insuring water tightness with a minimum of maintenance. Valves shall be designed for minimum 150-psi water-working pressure, unless otherwise indicated.

B. Air-Release Valves: Air-release valves shall vent accumulating air while system is in service and under pressure and be of the size indicated and shall meet the same general requirements as indicated for air and vacuum valves except that the vacuum feature will not be required. Valves shall be designed for a minimum water-working pressure of 150 psi, unless otherwise indicated. Valves mounted on stainless steel piping shall have cast CF8M stainless steel bodies and Type 316 stainless steel internals.

1. Air-Release Valve Locations: Air-release valves shall be installed at the top of the casing for each high service pumps to vent accumulated air.

2. Orifice Size: Provide sizing calculations with the shop drawings to demonstrate that the orifice size recommended is suitable for the application. Assume the following:

   i. Flow: 5,500 gpm

   ii. Operating Pressure: 65 psig

C. Combination Air Valves: Combination air valves shall combine the characteristics of air and vacuum valves and air release valves by exhausting accumulated air in systems under pressure and releasing or re-admitting large quantities of air while a system is being filled or drained, respectively. Valves shall have the same general requirements as indicated for air and vacuum valves.

D. Vacuum Relief Valves: Vacuum relief valves shall relieve a vacuum but not permit air release. Valves shall be spring-loaded poppet type set to crack at 0.25 psi vacuum. Valve inlet shall be equipped with a screened hood assembly. Valves shall have cast CF8M stainless steel bodies, Type 316 stainless steel internals and resilient seats. Valves shall be designed for a minimum 150 psi water-working pressure with screwed or flanged ends to match piping.

E. Manufacturers:

   1. APCO (Valve and Primer Corporation)
   2. Crispin (Multiplex Manufacturing Company)
   3. Golden-Anderson
   4. Val-Matic (Valve and Manufacturing Corporation)

PART 3 – EXECUTION

3.01 INSTALLATION

A. All valves shall be installed in accordance with the manufacturer's printed recommendations and the requirements of Section entitled “Valves, General”.

– END OF SECTION –

SECTION 15170 - LOW VOLTAGE ELECTRIC MOTORS

PART 1 -- GENERAL

1.01 THE REQUIREMENT

A. The Contractor shall furnish all labor, materials, tools and equipment necessary for furnishing, installing, connecting, testing and placing into satisfactory operation all low voltage electric motors as shown on the Drawings and specified herein. All motors required for this Contract shall comply with this Section unless otherwise noted.

1.02 CODES AND STANDARDS

A. Motors and related accessories shall be designed, manufactured, and/or listed to the following standards as applicable:

1. Institute of Electrical and Electronics Engineers (IEEE)

    a. IEEE 112 – Standard Test Procedure for Polyphase Induction Motors and Generators

2. National Electrical Manufacturer's Association (NEMA)

    a. NEMA MG 1 – Motors and Generators

3. Underwriters Laboratories (UL)

    a. UL 547 – Standard for Safety Thermal Protectors for Motors
    b. UL 674 – Electric Motors and Generators for Use in Hazardous (Classified) Locations
    c. UL 1004-1 – Standard for Rotating Electrical Machines
    d. UL 1004-3 – Standard for Thermally Protected Motors
    e. UL 1004-8 – Standard for Inverter Duty Motors

1.03 SUBMITTALS

A. In accordance with the procedures and requirements set forth in the General Conditions and Section 01300, Submittals, the Contractor shall obtain from the equipment manufacturer and submit the following:

1. Shop Drawings.

2. Spare Parts List.

B. Each submittal shall be identified by the applicable specification section.

1.04 SHOP DRAWINGS

A. Each submittal shall be complete in all respects, incorporating all information and data listed herein and all additional information required for evaluation of the proposed equipment's compliance with the Contract Documents.

B. Partial, incomplete or illegible submittals will be returned to the Contractor without review for resubmittal.

C. Individual shop drawings for electric motors shall be submitted in accordance with the procedures and requirements set forth in the General Conditions and Section 01300, Submittals, unless submitted as a part of the shop drawings for the driven equipment.

D. Shop drawings for electric motors shall include motor data sheets, dimensioned drawings, wiring diagrams for devices such as space heaters, temperature devices, and shaft grounding rings. Shop drawings shall identify electric characteristics and design, mechanical construction, manufacturer's name, type and pertinent specifications for the use intended, along with the name of the equipment to be driven. For motors rated 50 horsepower or greater, submittal of motor data for acceptance shall include, as a minimum, the following:

1. Manufacturer's type and frame designation
2. Horsepower rating
3. Time rating (per NEMA Standards)
4. Ambient temperature rating
5. Motor winding insulation system designation
6. RPM at rated load
7. Frequency
8. Number of phases
9. Rated-load amperes
10. Voltage
11. Code letter (starting KVA per horsepower)
12. Design letter for integral horsepower induction motors (per NEMA Standards)
13. Service factor
14. Temperature rise at full load and at service factor load
15. Efficiency at 1/4, 1/2, 3/4 and full load

16. Power factor at 1/4, 1/2, 3/4 and full load

17. Motor outline, dimensions and weight

18. Motor winding insulation system description

19. Horsepower required by connected machine at specified conditions (load curves) shall be supplied for all compressors, propeller and positive displacement pumps.

The foregoing data shall also be verified after manufacture and shall be included with the information to be furnished in the operation and maintenance manuals specified.

E. The shop drawing information shall be complete and organized in such a way that the Engineer can determine if the requirements of these Specifications are being met. Copies of technical bulletins, technical data sheets from "soft-cover" catalogs, and similar information which is "highlighted" or somehow identifies the specific equipment items the Contractor intends to provide are acceptable and shall be submitted.

1.05 SPARE PARTS

A. All spare parts as recommended by the equipment manufacturer shall be furnished to the Owner by the Contractor.

PART 2 -- PRODUCTS

2.01 MANUFACTURERS

A. The equipment covered by this Specification is intended to be standard equipment of proven performance as manufactured by reputable concerns. Equipment shall be designed, constructed and installed in accordance with the best practices of the trade, and shall operate satisfactorily when installed as shown on the Drawings.

B. Electric motors shall be manufactured by Baldor/Reliance Electric Company; Nidec Motors (U.S. MOTORS® brand); Toshiba Industrial and Power Systems, Inc.; Siemens Energy & Automation, Inc.; General Electric Company; or equal.

2.02 MATERIALS AND CONSTRUCTION

A. Motors shall be built in accordance with the latest standards of NEMA, including, but not limited to MG-1 and MG-2, IEEE, ANSI and to the requirements specified herein.

B. Type

1. Unless otherwise noted, motors specified herein shall be polyphase squirrel cage, NEMA Design B, or single-phase capacitor or repulsion start induction motors. Special equipment requiring a motor drive with unusual characteristics shall be equipped with a definite purpose motor to meet the necessary requirements.

2. Unless otherwise shown or specified, all motors 1/2 horsepower or larger shall be three- phase, 60 Hertz, NEMA Design B, squirrel cage induction motors designed for operation at 480 volts or greater as specified herein or shown on the Drawings.

3. Unless otherwise specified in the individual equipment specification for the driven equipment, or as required by the dynamic characteristics of the load as determined by the manufacturer of the machine to be driven, all polyphase squirrel cage motors shall be designed to withstand the starting voltage shown on the Drawings and shall have torque and locked rotor current characteristics as specified for NEMA Design B motors.

4. All motors 2 horsepower and smaller shall have windings encapsulated with a flexible epoxy compound, or insulated with a flexible epoxy compound, or insulated with the manufacturer's premium quality system which shall be subject to acceptance by the Engineer.

5. All motors above 250 horsepower shall have stator windings vacuum impregnated with a polyester insulation compound.

6. Unless otherwise noted, all motors smaller than 1/2 horsepower shall be standard single-phase capacitor start or repulsion start induction type designed for operation on 120 volts or 208 volts, 60 Hz alternating current. The motor shall deliver rated load without exceeding a 80 degrees C temperature rise while operating in a 40 degrees C ambient temperature. Small fan motors less than 1/4 HP may be split-phase or shaded pole type. Shaded pole motors rated more than 1/4 horsepower are not acceptable. Fractional horsepower motors shall be completely equipped with all necessary auxiliary components for starting and labeled as "Thermally Protected". Insulation shall be Class B, except that submersible motors shall have epoxy encapsulation. Unless otherwise noted, the motors shall be totally enclosed. Small fan motors may be of the open type where they are suitably protected from moisture dripping and lint accumulation. Motors shall be provided with sealed ball bearings lubricated for 10 years normal use.

7. Where specified, vertical hollowshaft motors shall be designed to carry the motors', pumps', and associated equipment's full thrust. The motors shall be equipped with grease lubricated spherical roller thrust bearings and lower radial guide bearings. Vertical hollowshaft motors shall be fitted with nonreversing ratchet assemblies where required by equipment specifications. Vertical adjustment shall be provided by means of a lockable nut at the top of the shaft.

8. Vertical hollowshaft motors shall have adequate thrust bearings to carry all motor loads and any other operating equipment loads. Horizontal motors shall not be installed where subjected to external thrust loads.

C. Rating

1. Each motor shall develop ample torque for its required service through its acceleration range and throughout its rated load range. The rating of the motors offered shall in no case be less than the horsepower shown on the Drawings or elsewhere specified. It should be noted that the motor sizes indicated on the Drawings or as otherwise specified herein, are motor sizes required to operate the

specific equipment which is specified. Higher rated motor sizes may be determined from the actual equipment submitted, approved, purchased, and installed. Protective devices, motor starters, disconnect switches, and other necessary equipment shall be furnished and installed for the actual motor sizes required at no additional cost.

2. Motor ratings shall be based on continuous operation. The maximum temperature rise for open and drip proof type motors shall not exceed 90 degrees C, and for totally enclosed type motors shall not exceed 80 degrees C.

D. Motor Winding Insulation

1. Insulation shall be as specified for each particular type or class of motor. The insulation system shall provide a high dielectric strength, long life covering for the windings which may be required to operate in a continually damp, corrosive, and/or chemically contaminated environment. The insulation shall be resistant to attack by moisture, acids, alkalies, abrasives, and mechanical and thermal shock. Leads shall be sealed with a non-wicking, non-hydroscopic insulation material.

2. Motor insulation resistance may be checked at any time after delivery to the job site or during the warranty period. Encapsulated motor stators may be subjected to insulation testing while completely submerged in water. Any motor not meeting the requirements specified herein will be rejected and shall be promptly replaced at no cost to the Owner.

3. Torque and locked rotor current characteristics for three phase motors shall be NEMA Design B. The locked rotor KVA/HP input at full voltage for 10 horsepower. motors and larger shall not exceed that permitted for Code Letter "J", except for specialized equipment requiring a motor drive with special definite characteristics.

4. Unless otherwise specified, non-inverter duty motors shall be furnished with a Class F insulation system. Unless otherwise specified, inverter duty motors shall be furnished with a Class H insulation system. In either case, temperature rise shall be limited to that for Class B insulation. Output torque and speed characteristics of each motor shall be suitable to operate the driven equipment through the full range of acceleration and operating load conditions without exceeding the nameplate current rating, and/or temperature rise.

E. Nameplates

1. The motor manufacturer's nameplate shall be engraved, embossed, or stamped on a stainless steel sheet and fastened to the motor frame with No. 4 or larger oval head stainless steel screws or drive pins. Printed or laser-etched nameplates are not acceptable.

2. Nameplates shall include as a minimum, Items a through m as listed in Article 1.04 in addition to that required by NEMA standards. The nameplate shall be positioned so as to be readily visible for inspection as installed in the facility.

F. Design

1. Motors shall be designed to accelerate and drive the connected equipment under all normal operating conditions without exceeding nameplate ratings.

2. Motors specified for operation with variable frequency drives shall be inverter duty rated. Motors shall be considered inverter duty rated only if they meet all of the requirements for NEMA MG-1 Part 31.

3. Motors shall be designed to output 100 percent of nameplate horsepower under continuous duty service without exceeding the temperature rise specified herein when controlled by the actual drives furnished. Inverter duty motors shall be designed to operate down to 10% of full load speed without the need for a line powered cooling fan.

4. Unless otherwise specified, electric motors shall be furnished with service factors in accordance with NEMA MG-1 as follows:

Type of Motor	**Service Factor**
Non-inverter Duty	1.15
Inverter Duty	1.0

5. Design selection with respect to the driven machine shall be such that the requirements do not exceed 85 percent of the motors' maximum rating modified by service factor, ambient temperature, enclosure, altitude and electrical service. The electrical service conditions shall be assumed to be 10 percent undervoltage, 5 percent underfrequency, and 3 percent voltage unbalance. Altitude shall be assumed to be the project site elevation plus 10 percent. Ambient temperature shall be assumed to be 95 degrees F in exterior locations, 104 degrees F (40 degrees C) in interior locations, and 122 degrees F (50 degrees C) within housings or enclosures; except where higher temperatures may be encountered within or on individual items of equipment. The applicable paragraphs of NEMA MG-1 shall be used in making the design selection.

6. Motors used with belt drives shall have sliding bases to provide for belt take up.

7. Terminal boxes shall be of sufficient size to accommodate the required quantity and size of conduits. Gasketed terminal boxes shall be furnished with all splash-proof and totally enclosed motors. NEMA ratings of the terminal boxes shall be suited for the application. Motors located in hazardous locations shall be furnished with terminal boxes suitable for the specific Class, Division, and Group suitable for the application. Terminal boxes shall be sized to accommodate accessory equipment such as motor differential current transformers, where required.

8. Terminal boxes for horizontal motors shall be located on the side of the motor shown on the Drawings. Terminal boxes shall be so designed that conduit entrance can be made from above, below, or either side of the terminal box.

G. Construction

1. Frames, mounting means, and shafts shall meet NEMA Standards for the horsepower, RPM, and enclosure selected. Enclosures shall be selected according to the degree of mechanical protection required and shall not be of

aluminum construction. All motors shall have a manufacturer's standard shop machinery finish, consisting of a rust-resisting priming coat of zinc chromate and a finish coat of alkyd machinery enamel. Reference Section 09900, Painting.

2. Motors shall have cast iron frames and a heavy gauge steel terminal box, with neoprene gaskets between the frame and the box and between the box and its cover. A grounding lug(s) shall be provided inside the terminal box.

3. Motors weighing more than 50 pounds shall be equipped with at least one lifting eye. All lifting hardware shall be corrosion resistant.

4. Motors located in hazardous locations shall be totally enclosed and suitable for the specific Class, Division, and Group suitable for the application.

5. Motors located in Class I or II, Division 1 hazardous locations shall bear a U.L.-674 label and shall be provided with a breather/drain approved for the hazardous location. The U.L. listed breather/drain shall prevent the entrance of contaminants while allowing moisture to drain out of the motor.

6. When located outdoors, or elsewhere if specified, motors shall be totally enclosed, non-ventilated (TENV) or totally enclosed, fan-cooled (TEFC) machines, unless otherwise noted. Totally enclosed motors shall be provided with two (2) 1/4 inch drain holes drilled through the bottom of the frame, which allows complete drainage of the frame. Where specified, TEFC motors controlled by a variable frequency drive shall be provided with a separately powered cooling fan motor that runs at 60HZ to ensure proper cooling of the motor at low speeds. Cooling fan motor shall be suitable for 120VAC, single phase operation. Vertically oriented motors located outdoors shall be provided with a drip cover over the fan end to prevent accumulation of precipitation.

7. Unless otherwise specified, motors rated 100 horsepower or greater located outdoors, in unheated structures, in below grade areas, or as otherwise indicated, shall be furnished with space heaters and embedded motor winding high temperature switches with leads brought out of the motor terminal box. Space heaters shall be suitable for 120VAC operation and for a maximum surface temperature of less than 200 degrees C. Spare heaters shall be of sufficient wattage to maintain the internal temperature of the motor at approximately 10 degrees C above the ambient temperature when the motor is not running.

   Embedded motor winding temperature switches shall operate at temperatures well below the temperature rating of the motor winding insulation system. Motor winding temperature switches are not required where other temperature monitoring devices (e.g. RTD's) are required.

8. All motors that are controlled by a VFD shall be furnished with motor winding high temperature switches embedded in the stator windings with the leads brought out to the motor terminal box.

10. If so specified and when located in indoor areas which are heated and weatherproof, motors shall be open drip-proof machines. Ventilation openings

shall be arranged to prevent the entrance of drops of liquid or solid particles at any angle from zero to 15 degrees downward from vertical.

11. Unless otherwise specified, or required, motors rated less than 200 horsepower shall be furnished with bearings of the grease lubricated, antifriction ball type with conveniently located grease fittings and drain plugs. A means of preventing bearings from becoming overgreased shall be provided. Bearings shall have a minimum B-10 life of 20,000 hours.

12. Rotors shall be statically and dynamically balanced. Rotor windings shall be one-piece cast aluminum. Where applicable, rotors shall be constructed with integral fins.

13. Externally mounted motor shaft grounding rings shall be provided to protect motors against motor shaft and bearing currents. Grounding rings shall be provided for all motors controlled by VFDs, with the following exceptions:

    a. Motors located in hazardous areas
    b. Motors rated less than 1 horsepower
    c. Submersible motors

14. All motors shall be provided with factory-installed one-hole terminations (ring terminals) on the ends of all motor leads. Terminations shall be identified for use with cables that have stranding other than Class B, and shall be the irreversible compression type.

H. Power Factor and Efficiency

1. All motors, including vertical hollowshaft motors, in the range of 1-500 horsepower, inclusive, shall be designed specifically for energy efficiency and high power factor. The motor efficiency and power factor shall meet or exceed the values listed in the table below when the motors are tested in accordance with the NEMA preferred test method IEEE 112A, Method B, Dynamometer. Each motor shall meet the minimum guaranteed efficiency value indicated in the table below. All tests shall be performed in accordance with the procedures contained in NEMA Standard MG1-12.58.

TABLE 12-11 FULL-LOAD EFFICIENCIES OF ENERGY EFFICIENT MOTORS ENCLOSED MOTORS								
	2 POLE		4 POLE		6 POLE		8 POLE	
HP	Nominal Efficiency	Minimum Efficiency	Nominal Efficiency	Minimum Efficiency	Nominal Efficiency	Minimum Efficiency	Nominal Efficiency	Minimum Efficiency
1	75.5	72	82.5	80	80	77	74	70
1.5	82.5	80	84	81.5	85.5	82.5	77	74
2	84	81.5	84	81.5	86.5	84	82.5	80
3	85.5	82.5	87.5	85.5	87.5	85.5	84	81.5
5	87.5	85.5	87.5	85.5	87.5	85.5	85.5	82.5
7.5	88.5	86.5	89.5	87.5	89.5	87.5	85.5	82.5
10	89.5	87.5	89.5	87.5	89.5	87.5	88.5	86.5
15	90.2	88.5	91	89.5	90.2	88.5	88.5	86.5
20	90.2	88.5	91	89.5	90.2	88.5	89.5	87.5
25	91	89.5	92.4	91	91.7	90.2	89.5	87.5
30	91	89.5	92.4	91	91.7	90.2	91	89.5
40	91.7	90.2	93	91.7	93	91.7	91	89.5
50	92.4	91	93	91.7	93	91.7	91.7	90.2
60	93	91.7	93.6	92.4	93.6	92.4	91.7	90.2
75	93	91.7	94.1	93	93.6	92.4	93	91.7
100	93.6	92.4	94.5	93.6	94.1	93	93	91.7
125	94.5	93.6	94.5	93.6	94.1	93	93.6	92.4
150	94.5	93.6	95	94.1	95	94.1	93.6	92.4
200	95	94.1	95	94.1	95	94.1	94.1	93
250	95.4	94.5	95	94.1	95	94.1	94.5	93.6
300	95.4	94.5	95.4	94s.5	95	94.1		
350	95.4	94.5	95.4	94.5	95	94.1		
400	95.4	94.5	95.4	94.5				
450	95.4	94.5	95.4	94.5				
500	95.4	94.5	95.8	95				

TABLE 12-12 FULL-LOAD EFFICIENCIES FOR NEMA PREMIUM™ EFFICIENCY ELECTRIC MOTORS RATED 600 VOLTS OR LESS (RANDOM WOUND) OPEN MOTORS						
	2 POLE		4 POLE		6 POLE	
HP	Nominal Efficiency	Minimum Efficiency	Nominal Efficiency	Minimum Efficiency	Nominal Efficiency	Minimum Efficiency
1	77	74	85.5	82.5	82.5	80
1.5	84	81.5	86.5	84	86.5	81.5
2	85.5	82.5	86.5	84	87.5	81.5
3	85.5	82.5	89.5	84	88.5	86.5
5	86.5	84	89.5	84	89.5	87.5
7.5	88.5	86.5	91	89.5	90.2	88.5
10	89.5	87.5	91.7	90.2	91.7	90.2
15	90.2	88.5	93	91.7	91.7	90.2
20	91	89.5	93	91.7	92.4	91
25	91.7	90.2	93.6	92.4	93	91.7
30	91.7	90.2	94.1	93	93.6	92.4
40	92.4	91	94.1	93	94.1	93
50	93	91.7	94.5	93.6	94.1	93
60	93.6	92.4	95	94.1	94.5	93.6
75	93.6	92.4	95	94.1	94.5	93.6
100	93.6	92.4	95.4	94.5	95	94.1
125	94.1	93	95.4	94.5	95	94.1
150	94.1	93	95.8	95	95.4	94.5
200	95	94.1	95.8	95	95.4	94.5
250	95	94.1	95.8	95	95.4	94.5
300	95.4	94.5	95.8	95	95.4	94.5
350	95.4	94.5	95.8	95	95.4	94.5
400	95.8	95	95.8	95	95.8	95
450	95.8	95	96.2	95.4	96.2	95.4
500	95.8	95	96.2	95.4	96.2	95.4

NOTES:

(1) Motor data for continuous duty, NEMA Design B, 1.15 service factor, 40 degrees Celsius ambient, Class F insulation, 3 phase, 460 volt, at listed speed rating.

(2) TEFC efficiencies apply to both horizontal and vertical motors.

2. Motors rated 50 horsepower or greater shall be individually tested at the factory before shipment, with a copy of test results provided for the Engineer, to assure compliance with the efficiency and power factor specifications.

PART 3 -- EXECUTION

3.01 INSTALLATION

A. Motors shall be installed as shown on the Drawings and in accordance with the manufacturer's installation instructions.

3.02 DELIVERY, STORAGE, AND HANDLING

A. Motors shall be properly protected from weather hazards. Motors shall not be allowed to be wrapped tightly in plastic while outdoors. Motors delivered to the site which will not be put in service for a time in excess of 30 calendar days, whether in storage or installed, shall have the shafts rotated a minimum of five (5) rotations every 30 days.

B. Motors provided with space heaters shall have temporary power applied to the heaters no later than 30 calendar days after delivery to the site until permanent power can be applied to the heaters.

C. Motors that, in the opinion of the Engineer, have not been properly protected shall be inspected by the manufacturer's representative. Any required electrical corrections for testing shall be made at the Contractor's expense prior to acceptance and/or use.

D. All motors shall operate without any undue noise or vibration and shall show no signs of phase unbalance.

3.03 TESTING

A. All tests shall be performed in accordance with the requirements of the General Conditions and Division 1. The following tests are required:

1. Shop Tests

a. All motors shall be shop tested and inspected in accordance with the equipment manufacturer's standard procedures. The manufacturer's testing and inspection procedures shall demonstrate that the equipment tested conforms to the requirements specified.

b. In addition to the efficiency and power factor testing specified herein, each motor shall be tested to determine compliance with the applicable requirements of the IEEE, ANSI and NEMA. Tests shall be as follows:

(1) Motors less than 50 HP

(a) Each motor shall be subjected to a standard, short commercial test including the following:

i) Running current, no load
ii) Locked rotor current

iii) High potential
iv) Winding resistance
v) Bearing inspection

(2) Motors between 50 and 100 HP

(a) Each motor shall be subjected to the above tests and shall be furnished with certified test results.

(3) Motors larger than 100 HP

(a) Each motor shall be furnished with certified test results. Each motor shall be subjected to a complete test consisting of full load heat run, percent slip, running load current, locked rotor current, breakdown torque (calculated), starting torque, winding resistance, high potential, secondary current and voltage at collector rings (wound rotor), efficiencies at 100, 75 and 50 percent of full load, power factors at 100, 75 and 50 percent of full load and bearing inspection. Tests will be witnessed by the Engineer where specifically indicated.

(4) Test Reports

(a) All test results for motors over 100 horsepower shall be submitted to the Engineer for approval. Copies of witnessed test raw data shall be submitted to the Engineer immediately upon completion of such tests.

2. Field Tests

a. Field tests shall be performed in accordance with the requirements specified in the General Conditions, Division 1, and Section 16000, Basic Electrical Requirements.

b. All electric motors furnished for this project one (1) horsepower or larger shall have the information required in the following tabulation completed. See Exhibit "A" on following page.

c. All field testing shall be witnessed by the Engineer.

(EXHIBIT A)

MOTOR TEST RECORD					
Motor Identification Remarks	Location	Specified Horsepower	Nameplate Horsepower	Nameplate Amperage (FLA)	Measured Amperage Under Normal Operating Conditions

- END OF SECTION -

SECTION 15390 - SCHEDULES

PART 1 -- GENERAL

1.01 THE REQUIREMENT

A. Reference Section 15000, Basic Mechanical Requirements.

1.02 PIPING SYSTEM SCHEDULES

A. Piping requirements for this Section are outlined on the Drawings, and in the Piping System Schedule. In the absence of a specified test pressure, pipe shall be tested at a pressure 50 percent greater than the normal operating pressure as determined by the Engineer or 10 psig, whichever is greater unless the Schedule indicates that no test is required.

B. If the pipe material is not shown on the Piping System Schedule or otherwise specified, the following materials shall be used:

Pipe Size	Material	Type of Joint	Class/Design	Test Pressure
4-in and larger	DIP	Flanged (Exposed)	53	150 psig
4-in through 24-in	DIP	Restrained (Buried)	Pressure Class 350	150 psig
30-in and greater	DIP	Restrained (Buried)	Pressure Class 300	150 psig
Less than 4-in	PVC	Socket	Sch 80	150 psig

C. Non-critical gravity lines such as drains, floor drains, roof drains, etc., do not typically require a pressure test.

1.03 PIPING SCHEDULE ABBREVIATIONS

A. Service

D - Drain
FW - Finished Water
S - Sample
SW - Seal Water
-

B. Material

CPVC - Chlorinated Polyvinyl Chloride
DI - Ductile Iron
GS - Galvanized Steel
PVC - Polyvinylchloride
SS - Stainless Steel

C. Thickness, Class or Schedule

CL	-	Class
DR	-	Diameter Ratio
PN	-	Pressure Class
Sch	-	Schedule
SDR	-	Standard Diameter Ratio

D. Type of Joints

Flg	-	Flanged
Grvd	-	Grooved or Arched Band
MJ	-	Mechanical Joint
PO	-	Push on Joint
RJ	-	Restrained Joint
SW	-	Solvent Welded
Thd	-	Threaded
Wld	-	Welded

E. Type of Fittings

CPVC	-	Chlorinated Polyvinyl Chloride
DI	-	Ductile Iron
PVC	-	Polyvinylchloride
SS	-	Stainless Steel

G. Interior Protective Coating

CML	-	Cement Mortar Lined
EL	-	Epoxy Lined

H. Exterior Protective Coating

AC	-	Asphalt Coated
P	-	Painted

1.04 PIPING SCHEDULE

Service	Nominal Pipe Diameter (Inches)	Material	Thickness Class or Schedule	Working Pressure (PSIG)	Type of Joints	Type of Fittings	Protective Coating		Remarks
							Interior	Exterior	
Drain									
Building Interior	Up to 3	PVC	Sch 80	150 @100 degrees F	Flg or SW	PVC	--	P	--
Finished Water									
Building Interior	All	DI	CL 53	100	Flg	DI	CML	P	--
Building Exterior Temporary Piping	All	See Spec 11001	See Spec 11001	100	See Spec 11001	See Spec 11001	See Spec 11001	See Spec 11001	
Building Exterior Permanent Piping Below Grade	4 to 24	DI	PN 350	100	RJ	DI	CML	P	--
Building Exterior Permanent Piping Below Grade	30 and greater	DI	PN 300	100	RJ	DI	CML	P	--
Seal Water									
Seal Water Piping	0.25 to 1	SS	See Spec 15013	100	See Spec 15013	See Spec 15013	--	--	--
Instrumentation Tubing									
Instrumentation Tubing Building Interior	0.25 to 1	SS	See Spec 15013	100	See Spec 15013	See Spec 15013	--	--	--

Service	Nominal Pipe Diameter (Inches)	Material	Thickness Class or Schedule	Working Pressure (PSIG)	Type of Joints	Type of Fittings	Protective Coating		Remarks
							Interior	Exterior	
Instrumentation Tubing Building Exterior	0.25 to 1	SS (unless indicated otherwise)	See Spec 15013	100	See Spec 15013	See Spec 15013	--	--	--
Copper Tubing Where Indicated on Drawings	0.25 to 1	Copper	See Spec 15014	100	See Spec 15014	See Spec 15014	--	--	--

- Remainder of Page is Intentionally Blank -

1.05 VALVE SCHEDULES

A. Performance Affidavits shall be required for all valves listed in the valve schedule(s). Performance Affidavits shall be provided in accordance with Section 11000, Equipment General Provisions and Section 01300, Submittals. All valves shall be tagged by the manufacturer according to the control valve designations listed in the Schedule.

B. Valves not listed in the valve schedule(s) shall be manually operated, unless otherwise shown on the Drawings.

C. The following abbreviations are used in the schedule:

1. System
   - D - Drain
   - FW - Finished Water

2. Piping
   - DI - Ductile Iron
   - PVC - Polyvinylchloride

3. Body Type
   - NRS - Non-Rising Stem
   - PVC - Polyvinylchloride
   - SS - Stainless Steel

4. Ends
   - Flg - Flanged
   - MJ - Mechanical Joint
   - RJ - Restrained Joint
   - SW - Socket Welded
   - Thd - Threaded

General Valve Schedule								
System	**Function**	**Valve Type**	**Body Type**	**Ends**	**Size (Inches)**	**Materials Body/Trim**	**Spec. No.**	**Notes**
Drain	Sump Pump Discharge	Ball	1 piece	Union	0.5 to 2	PVC	15106	
Seal Water	Isolation	Ball	SS	Flg	0.5 to 2	SS	15106	
Finished Water	Isolation	Gate	NRS	MJ of Flg	All	Iron/Bronze	15108	

- END OF SECTION -

SECTION 15500 - BASIC HVAC REQUIREMENTS

PART 1 -- GENERAL

1.01 THE REQUIREMENT

A. The Contractor shall furnish all labor, equipment and material for the complete installation of the heating, ventilation, air conditioning, piping, etc. as indicated on the drawings and specified herein.

B. Air conditioning systems shall be furnished and installed to operate as a system. The Contractor shall coordinate all requirements between manufacturers to insure unit responsibility and compatibility of the systems.

1.02 SUBMITTALS

A. The Contractor shall submit shop drawings on all equipment, accessories and appurtenances and all fabrication work or other mechanical and air conditioning work required, all in accordance with the requirements of Section 01300, Submittals.

B. Data to be submitted shall include but not be limited to:

1. Catalog data consisting of specifications, illustrations and a parts schedule that identifies the materials to be used for the various parts and accessories. The illustrations shall be in sufficient detail to serve as a guide for assembly and disassembly.

2. Complete assembly, and installation drawings with clearly marked dimensions. This information shall be in sufficient detail to serve as a guide for assembly and disassembly and for ordering parts.

3. Weight of all component parts and assembled weight.

4. Electrical characteristics, wiring, diagrams, etc.

5. Sample data sheet of equipment nameplate(s) including information contained thereon.

6. Insulation materials, coating, jackets, detail density, thermal conductivity and thickness of all insulation materials to be furnished.

7. Details of special fasteners and accessories.

8. Type of adhesives, binders, joint cement, mastics.

9. Proposed insulation procedures and installation methods.

10. Spare parts list

11. Special tools list

C. The Contractor shall obtain from the manufacturer and submit to the engineer copies of the results of all certified shop tests.

D. The Contractor shall obtain from the manufacturer and submit to the engineer copies of certified letters of compliance in accordance with the Specifications.

1.03 OPERATION AND MAINTENANCE MANUALS

A. The Contractor shall submit operation and maintenance manual in accordance with the procedures and requirements set forth in the General Conditions and Division 1.

B. Operation and Maintenance Manuals shall be submitted for all equipment.

1.04 MANUFACTURER'S INSTRUCTIONS

A. Installation of all equipment shall be in accordance with manufacturer's data.

B. All changes from the installation procedures in manufacturers' data shall be submitted for approval in accordance with the requirements for shop drawings.

C. Keep all manufacturers' data provided in a secure manner at the job site at all times. Catalog and index this data for convenient reference.

D. Manufacturers' data shall be available for the information of the Owner, Engineer, and the use of other trades.

E. Turn over all data to the Owner through the Owner's representative at completion of the Work and final testing.

F. Furnish Owner, indexed and bound in loose leaf binders, three (3) complete sets of Operating and Maintenance Instructions and pertinent manufacturers' literature and information on all of the apparatus and equipment under this Division of the Specifications.

G. Submit all instruction books and manuals in accordance with Division 1.

1.05 CODES, PERMITS AND STANDARDS

A. The Contractor shall obtain and pay for all permits and shall comply with all laws and codes that apply to the Work.

B. The Contractor shall be responsible for all added expense due to his choice of equipment, materials or construction methods.

C. All work and materials shall be in full accordance with the latest State rules and regulations or publications including those of the State Fire Marshall, the Uniform Plumbing Code, and

all local codes. Nothing in the Plans and/or Specifications shall be construed to permit work not conforming to the above codes, rules and regulations.

D. All equipment, materials and installations shall conform to the requirements of the most recent edition with latest revisions, supplements and amendments of the following, as applicable:

Air Conditioning and Refrigeration Institute (ARI)
Air Diffusion Council (ADC)
Air Moving and Conditioning Association (AMCA)
American Society of Heating, Refrigerating and Air Conditioning Engineers, Inc. (ASHRAE)
American National Standards Institute (ANSI)
American Society for Testing and Materials (ASTM)
American Society of Mechanical Engineers (ASME)
Factory Mutual (FM)
National Electric Code (NEC)
NFPA 90A - Air Conditioning and Ventilation Systems
Occupational Safety and Health Standards (OSHA)
Sheet Metal & Air Conditioning Contractors National Association (SMACNA)
Standard Building Code - 1985 edition
Standard Mechanical Code - 1985 edition
Standard Plumbing Code - 1985 edition
State and local codes, ordinances and statutes
Underwriters Laboratories (UL)

Others as designated in the specifications.

1.06 QUALITY ASSURANCE

A. All material and equipment shall be the latest design, new, undeteriorated, and the first quality standard product of manufacturers regularly engaged in the production of such material and equipment.

B. When two or more units of the same class of material or equipment are required, they shall be products of a single manufacturer.

C. All work shall be performed in a neat and workmanlike manner by workers skilled in their respective trades, and all materials and equipment shall be installed as recommended by the manufacturers and in accordance with specified codes and standards.

D. Touch up and/or repaint to match original finishes all factory finished or painted equipment and materials which are scratched or marred during shipment or installation.

1.07 IDENTIFICATION MARKERS

A. Provide manufacturer's standard laminated plastic, color coded duct markers. Conform to the following color codes:

Yellow/Green: Supply air

Blue: Exhaust, outside, return and mixed air

Nomenclature: Include the following:
Direction of air flow.
Duct service (supply, return, exhaust, etc.)

1.08 GASKETS AND CONNECTORS

A. Provide new gaskets wherever gasketed mating equipment items or pipe connections have been dismantled. Gaskets shall be in accordance with manufacturer's recommendations.

B. Replace all assembly bolts, studs, nuts and fasteners of any kind which are bent, flattened, corroded or have their threads, heads or slots damaged.

C. Furnish all bolts, studs, nuts and fasteners for make-up of all connections to equipment and replace any of these items damaged in storage, shipment or moving.

PART 2 -- PRODUCTS

2.01 GENERAL

A. Each item of equipment shall be furnished and installed complete with all supports, mounting frames, duct work, piping, louvers, panels, grilles, electric drive units and controls, mechanical equipment, electrical work, insulation and appurtenances ready for operation.

B. All equipment and appurtenances shall be anchored or connected to supporting members as specified or as indicated on the Plans.

C. All mechanisms or parts shall be amply proportioned for the stresses which may occur during operation or for any other stresses which may occur during fabrication and erection. Individual parts furnished which are alike in all units shall be alike in workmanship, design, and materials and shall be interchangeable. All equipment shall be of the manufacturer's top line, industrial-commercial grade.

D. The Contractor shall ascertain that all chassis, shafts, and openings are correctly located, otherwise he shall cut all new openings required at his own expense. Cutting of new openings shall be coordinated with other trades. Proposed new cutting shall be submitted to the Engineer for review and acceptance prior to cutting.

E. The Plans shall be taken as diagrammatic. The Contractor shall check the Structural Plans and sections for detail dimensions and clearances. Sizes of ducts and their locations are indicated, but not every offset, fitting, or structural obstruction is shown.

F. Alignment of ducts may be varied where necessary to account for slight architectural changes or to avoid conflict with the Work of other trades without additional expense to the Owner.

G. All supports required for the proper installation of the equipment, but not forming an integral part of the building structure, shall be provided, unless specifically noted otherwise. Equipment shall be supported on spring-type vibration isolators.

PART 3 – EXECUTION

(NOT USED)

- END OF SECTION -

SECTION 15590 - FANS

PART 1 -- GENERAL

1.01 GENERAL REQUIREMENTS

A. All parts of the equipment furnished shall be amply designed and constructed for the maximum stresses occurring during fabrication, erection and continuous operation. All materials shall be new and both workmanship and materials shall be of the very best quality, entirely suitable for the service to which the unit is to be subjected and shall conform to all applicable sections of these specifications. All parts of duplicate equipment shall be interchangeable without modification. Manufacturer's design shall accommodate all the requirements of these specifications.

B. All anchor bolts, washers, clips, clamps and fasteners of any type shall be constructed of 316 stainless steel.

C. All fan motors shall be provided with high premium energy efficient totally enclosed fan cooled type, unless otherwise noted.

D. Provide exhaust fans which have been tested and rated in accordance with AMCA standard, and bear AMCA Certified Ratings Seal.

E. Provide motors and electrical accessories complying with NEMA standards.

F. Fans shall be standard prefabricated units of the type, size and arrangement indicated on the Drawings. All fans shall be rated and constructed in accordance with the Air Moving and Conditioning Association. Special construction materials, coatings and multi-speed fan motors shall be provided as indicated on the Drawings.

G. Impellers shall be rigidly constructed, accurately balanced dynamically and statically at the speed at which it is scheduled to operate and free from objectionable vibration or noise. Fans with corrosion resistant coatings shall be balanced after being coated.

H. Fans shall have no overloading characteristics for the horsepower indicated. All points on the fan brake horsepower curve shall not exceed the motor horsepower rating

I. V-belt drives shall be rated at least 50 percent greater than the rated motor horsepower, and shall have sheaves which can vary the fan speed by 10 percent above or below the rating point. The fan motor shall be mounted on an adjustable heavy mounting plate.

J. The operating fan speed shall be no greater than 85% of the maximum allowable fan speed for the selected model.

1.02 RELATED WORK SPECIFIED ELSEWHERE

A. Section 15500 - Basic HVAC Requirements

B. Section 15598 – Metallic Ductwork and Duct Accessories

C. Section 15616 – HVAC Testing, Adjustment, and Balancing

1.03 SUBMITTALS

A. The Contractor shall submit shop drawings on all equipment, accessories and appurtenances and all fabrication work required for all equipment specified in this section in accordance with Section 01300, Submittals.

B. The Contractor shall submit shop drawings for fan supports, locating and identifying each support, brace, hanger, guide, component and anchor. Fan support systems shall be designed and Shop Drawings prepared and sealed by a Registered Professional Engineer of state of Connecticut and shall comply with Section 01350 Seismic Anchorage and Bracing.

C. Required information shall include:

1. Horsepower, voltage, and rotating speed of motors.

2. Total weight of the equipment plus the approximate weight of the shipped materials.

3. Complete erection, installation, and adjustment instructions and recommendations.

4. Fan performance curve at the operating speed, minimum, and maximum speeds. Provide brake horsepower curve for the operating speed.

5. Details of corrosion resistance coating.

6. Detailed construction information and data sheets for all accessories such as roof curbs, dampers, damper operators disconnect switches, vibration isolators etc.

7. Example equipment nameplate data sheet.

8. Interconnecting wiring diagrams.

9. List of recommended lubricants.

10. Special Tools List

11. Reports of Certified Shop Tests

12. AMCA Approval for Fan Ratings

13. Sound data

14. Manufacturer's Installation Certification

15. Manufacturer’s Field Test Results Certification

D. The Contractor shall submit to the Owner a color chart of available colors for the corrosion coating to be applied to fans as indicated in the Contract Documents. The Owner shall select the final color choice.

1.04 OPERATION AND MAINTENANCE MANUALS

A. The Contractor shall submit complete operation and maintenance manuals in accordance with the procedures and requirements set forth in Section 01300, Submittals.

1.05 MANUFACTURERS

A. The materials covered by these specifications are intended to be equipment of proven reliability and as manufactured by reputable manufacturers having experience in the production of such equipment. The equipment furnished shall be designed, constructed, and installed in accordance with the best practices and methods and shall operate satisfactorily when installed as shown on the Contract Drawings and operated per manufacturer's recommendations.

1.06 CONTRACTOR'S RESPONSIBILITY AND MANUFACTURER’S FIELD SERVICES

A. The services of a qualified manufacturer's Technical Representative shall be provided. The manufacturer Technical Representative’s services shall include the following site visits:

Service	**Total Days**	**No. of Trips**	**Remarks**
Installation Checkout	1	1	In accordance with Section 15590
Startup and Testing	3	3	In accordance with Section 15616
Training	1	1	In accordance with Section 01700

B. A written report covering the representative's findings and installation approval shall be mailed directly to the Engineer covering all inspection and outlining in detail any deficiencies noted.

C. The times specified are exclusive of travel time to and from the facility and shall not be construed as to relieve the manufacturer of any additional visits to provide sufficient service to place the equipment in satisfactory operation.

1.07 SPECIAL TOOLS

A. Furnish all special tools necessary to disassemble, service, repair and adjust the equipment.

PART 2 -- PRODUCT

2.01 WALL MOUNTED PROPELLER FANS

A. Fans shall be an airfoil propeller fan with integral wall panel. The power assembly shall be bolted to a heavy duty wall panel with continuously welded corners and an integral venturi. The fan and wall panel shall be all aluminum construction.

B. The propeller shall be extruded aluminum air foil design with cast aluminum hub. The hub shall be keyed and locked to the shaft utilizing two set screws or a taper lock bushing.

C. Propeller shall be balanced in accordance with AMCA Standard 204-05.

D. Provide fans which are listed by UL and have a UL label affixed, and which are designed, manufactured, and tested in accordance with UL 705 "Power Ventilators".

E. Fans shall be V-belt or direct driven as indicated on the drawings or as contained herein.

F. The motor, bearings, and drives shall be mounted on a heavy duty aluminum power assembly.

G. Fans shall have internal terminal box mounted on the exterior for ready wiring.

H. Adjustable motor plates shall utilize threaded rods to provide positive belt tensioning.

I. Bearings shall be heavy duty regreasable ball type in a cast iron pillow block housing selected for a minimum L10 life in excess of 50,000 hours at maximum catalogued operating speed.

J. Belts shall be oil and heat resistant, static conducting.

K. Drives shall be keyed and securely attached to the wheel and motor shafts.

L. All drives shall be variable pitched type and shall be sized for 150 percent of the installed motor horsepower.

M. Provide OSHA motor guard to prevent accidental contact with motor or fan blades. The guard shall be of aluminum construction.

N. Provide aluminum wall sleave.

O. Centrifugal fans shall be as manufactured by Hartzell, Greenheck Fan Corp., Loren Cook Co, or Approved Equal.

P. See Section 2.10 of this specification for additional requirements.

2.02 ADDITIONAL REQUIREMENTS FOR ALL FANS

A. The following additional requirements shall apply to all fans.

1. Backdraft or motor-operated dampers shall be provided and installed in the openings as indicated on the Contract Drawings.

2. All fans shall be provided with either integral or supplementary spring vibration or sound-absorbing mountings.

3. All motors unless indicated otherwise in this Specification or the Contract Drawings shall be TEFC. The break horsepower at any point on the fan curve for the design speed shall not exceed the motor nameplate horsepower. The break horse power shall include all applicable belt drive losses. Using the motor service factor shall be prohibited.

4. All equipment shall be seismically secured and restrained in accordance with the Seismic Restraint Manual, Guidelines for Mechanical Systems, latest edition, as published by the Sheet Metal and Air Conditioning Contractors National Association, Inc. (SMACNA) and designed in accordance with the seismic provisions of ASCE-7 and the current Connecticut Building Code to the extent that the most stringent provisions are utilized in developing the design seismic forces. See section 01350 for additional details and requirements.

5. All non-fiberglass fans shall receive a corrosion resistant coating. The coating shall be an epoxy coating suitable for protecting the equipment from continuous exposure to air containing hydrogen sulfide 3ppm. The fans in the Supplemental Carbon Facility shall be suitable for exposure to methanol in addition to hydrogen sulfide. The coating shall be applied to all surfaces of the fans including but not limited to fan wheels, propellers, hubs, structural components, housings (interior and exterior), inlet boxes, dampers, screens, lube lines, curb boxes, and curb box adapters. A UV resistant top coat shall be applied to all coating systems that are not rated for UV exposure. The Contractor shall submit and coordinate the available color choices to the Owner for final color selection.

2.03 DAMPERS

A. See the respective sections in Sections 15598 and 15599 for construction requirements.

B. Dampers shall be coordinated to operate and interface with the fan being furnished.

C. Dampers shall be sized to fit the specified openings.

PART 3 -- EXECUTION

3.01 INSTALLATION

A. Contractor shall install fans in accordance with manufacturer's installation instructions and recognized industry practices to insure that ventilators serve their intended function.

B. Contractor shall coordinate fan work with work of walls, and ceilings, as necessary for proper interfacing.

C. Connect ducts to fans in accordance with manufacturer's installation instructions.

D. The Contractor shall have the Manufacturer's Technical Representative provide in writing that the equipment is installed per the manufacturer's requirements and operates as required by the Contract. The Contractor shall submit the written confirmation to the Engineer for information only.

3.02 FIELD QUALITY CONTROL

A. Testing: After installation of fans has been completed, test each fan to demonstrate proper operation of units at performance requirements as specified. When possible, field correct malfunctioning units, then retest to demonstrate compliance. Replace units which cannot be satisfactorily corrected. See Section 15616, HVAC Testing, Adjusting and Balancing for testing requirements.

B. Cleaning: Clean factory-finished surfaces. Repair any marred or scratched coatings with a coating specified by the equipment manufacturer for repairs.

- END OF SECTION -

SECTION 15598 - METALLIC DUCTWORK & DUCT ACCESSORIES

PART 1 -- GENERAL

1.01 THE REQUIREMENT

A. The Contractor shall furnish and install all ductwork, fittings, and accessories as shown on the Drawings and in accordance with the Specifications.

B. The equipment shall be furnished complete with all accessories, special tools, base attachments, mountings, anchor bolts and other appurtenances as specified or as may be required for a complete installation.

1.02 RELATED WORK SPECIFIED ELSEWHERE

A. Section 15500 - Basic HVAC Requirements

B. Section 15990 – HVAC Testing, Adjustment, and Balancing

1.03 SUBMITTALS

A. The Contractor shall submit shop drawings on all new and modified ductwork, accessories and appurtenances and all fabrication work required for all equipment specified in this section in accordance with Section 01300, Submittals.

B. The Contractor shall submit shop drawings for supports for new and modified ductwork. The shop drawings shall locate and identify each support, brace, hanger, guide, component and anchor. Ductwork support systems shall be designed and Shop Drawings prepared and seal by a Registered Professional Engineer of The State of Florida and shall comply with Section 01350, Seismic Anchorage and Bracing.

C. The Contractor shall submit shop drawings for support of multi-section dampers and louvers. The shop drawings shall identify all supports and reinforcement required to allow the multi-section dampers and louvers to be rated for the maximum pressure of the individual damper and louver sections. The support system shall be designed and calculations prepared and sealed by a Registered Professional Engineer of The State of Florida.

1.04 WARRANTY AND GUARANTEE

A. Warranty and Guarantee shall be as specified in Section 11000 with the exception that the warranty period shall be for two (2) years.

PART 2 -- PRODUCT

2.01 GENERAL REQUIREMENTS

A. All work shall be constructed and installed in a first class workmanlike manner in accordance with the recommendations given in the latest edition of the Sheet Metal & Air Conditioning Contractors National Association (SMACNA) HVAC Duct Construction Standards and Round Industrial Duct Construction Standards, unless otherwise specified.

B. All ductwork shall be constructed in accordance with the Schedule of Duct Construction Standards listed on the last page of this section. Transverse duct connections shall be bolted, gasketed connections.

C. All ducts shall conform accurately to the dimensions indicated on the Drawings, shall be straight and smooth on the inside with neatly finished joints, and shall not be decreased at any point to avoid obstructions. No piping, conduit or structural work shall be installed in or through any ductwork. All ductwork shall be run as close as possible to structural members, walls and ceilings. Duct work shall be as shown on the drawings, subject to such modifications as may be necessary to suit field conditions.

D. Where existing walls, floors or roofs must be penetrated, the Contractor shall neatly cut the required openings and patch the existing work to provide a neat and finished appearance.

E. All ducts shall be made reasonably tight throughout and shall have no openings other than those required for the proper operation and maintenance of the systems.

F. Minimum thickness for metal ducts shall be per SMACNA guidelines, but in no instance shall be less than 20 gauge for steel ducts and 14 gauge for aluminum ducts.

G. Supports for ducts shall be provided and securely fastened in place at every change in direction and as required to prevent deflection.

H. Changes in size of ducts shall be by means of a taper transformation piece, the included angle of the taper being not more than 20 degrees.

I. All duct work joints shall be sealed to achieve a SMACNA Seal Classification Rating as indicated in the ductwork schedule of this specification.

J. The weight of material used for ducts and stiffeners, the fabrication methods, cross breaking of flat duct surfaces, and assembling of the ductwork shall conform to the Duct Manual and Sheet Metal Construction for Ventilating and Air Conditioning Systems published by the Sheet Metal and Air Conditioning Contractors National Association, Inc. Beaded duct construction shall not be used.

K. All duct panels shall be braced or reinforced as necessary, in addition to the minimum requirements in the ASHRAE Guide, to eliminate vibration and noise and to prevent deflection from the indicted shapes and dimensions.

2.02 STAINLESS STEEL AND ALUMINUM DUCT

A. Ductwork material shall be as indicated in the duct schedule in Part 3 of this specification.

B. Stainless Steel: ASTM A480/A480M, Type 316 having a number 2D finish for all applicable ducts and of adequate strength and rigidity to meet the conditions of the service and installation requirements, and shall be properly protected where subject to mechanical injury.

C. Aluminum: ASTM B209, alloy 1100, 3003, or 5052 for all applicable ducts and of adequate strength and rigidity to meet the conditions of the service and installation requirements, and shall be properly protected where subject to mechanical injury.

D. Transverse duct connections for rectangular ducts shall be bolted, gasketed connections made with standard Ductmate 35 System as manufactured by Duct Mate Industries, W.D.C.I. or approved equal. All longitudinal seems shall be Pittsburg Z, or better. Duct flange system material shall match the duct material. Gaskets shall be suitable for exposure to hydrogen sulfide 2ppm.

E. Transverse duct connections for round ducts shall be bolted, gasketed connections in accordance with chapter 12 of SMACNA Round Industrial Duct Construction Standards. Duct connections shall be the same material as the duct. Utilize longitudinal seam ductwork. Gaskets shall be suitable for exposure to hydrogen sulfide 2 ppm and outdoor use.

F. All ductwork shall be shop fabricated in sections with flanged ends. The Ductmate 35 flange system shall be factory spot welded to the ductwork. No field welding of ductwork shall be permitted. Welding equipment and electrodes shall be of a type specifically suited for welding light gauge 316 stainless steel or aluminum, as applicable, to provide consistently good quality welds.

G. All duct sections shall be constructed and installed without forming dips and traps.

H. All ducts shall have a minimum clearance of three (3) inches from all combustible material.

2.03 HANGERS AND SUPPORTS

A. All ductwork shall be securely hung and anchored to the building structure. Unless otherwise shown or specified, hangers and stiffeners for ducts shall conform with the recommendations given in the SMACNA HVAC Duct Construction standards and SMACNA seismic restraint manual. Ducts shall be supported on trapeze hangers consisting of angles and rods. Use of strap hangers and straps is prohibited.

B. All hangers, rods, supports, bolts, nuts, washers, inserts, and appurtenances shall be constructed of the same material as the ductwork that it supports.

C. All ductwork shall be supported from trapeze type hangers. Stainless steel hanger rods shall be minimum 3/8 inch for all ducts with half perimeter up to 72 inches, and ½ inch diameter for all ducts with half perimeter larger than 72 inches. Aluminum hanger rods shall be of sufficient diameter to achieve the equivalent strength of the stainless steel hanger rods for the sizes indicated. A pair of rods shall be provided at each duct support point. Maximum hanger spacing shall be 8 feet for ducts with half perimeter up to 72 inches and 6 feet for ducts with half perimeter larger than 72 inches.

D. Hanger Construction and installation shall conform to SMACNA Standards, except as specified. No sheet metal duct hangers or straps will be allowed.

E. Support shall be furnished at each fitting. Material of supports shall match duct material.

F. Seismic & Wind Requirements: All ductwork shall be provided with seismic and wind restraints in accordance with the Seismic Restraint Manual, Guidelines for Mechanical Systems, as published by SMACNA, in accordance with the Florida Building Code, the indicated design wind speed, and ASCE-7 to the extent that the most stringent provisions are utilized. Material of seismic and wind restraints shall be as specified herein. A calculation signed and sealed by a Professional Engineer of the State of Florida shall be provided verifying that the installed supports meet the seismic and wind requirements. See section 01350, Seismic Anchorage and Bracing and the Structural Design Drawings for additional details and requirements.

2.04 ACCESSORIES

A. Manual Volume & Backdraft Dampers in Rectangular Stainless Steel or Aluminum Duct:

1. Manufacturer: Provide products of one of the following:

   a. Greenheck

   b. Ruskin

   c. Nailor

   d. or equal

2. Frame, blade, axle, bearings, jamb seal, and linkage materials: Match ductwork.

3. Blades:

   a. Opposed blades for volume dampers and parallel blades for backdraft dampers;

   b. Vinyl edge seals, thermoplastic elastomer seals for corrosive/chemical services.

4. Damper shafts shall be solid hexagonal or square shape.

5. Linkage shall be concealed in damper frame.

6. Provide outside handle, quadrant and approved position indicator and locking device on volume dampers.

7. Reference: SMACNA Standards.

B. Backdraft Dampers in Round Stainless Steel or Aluminum Duct:

1. Manufacturer: Provide products of one of the following:
   a. Ruskin
   b. Greenheck
   c. Nailor
   d. Or equal

2. Frame, blade, axle, bearings: Match ductwork

3. Damper shall be of the two blade design mounted on separate axles and shall be suitable for horizontal or vertical installations

4. Blades shall be retained in the closed position by a tensioned spring. The spring shall be field adjustable

5. Seal shall be a vinyl foam

C. Stainless Steel Motorized Dampers:

1. Manufacturer: Provide products of one of the following:

   a. Ruskin

   b. Greenheck

   c. or equal

2. Frame, blade, axle, bearings, jamb seal, and linkage materials: 316 Stainless Steel.

3. Blades:

   a. Opposed blades (control) and Parallel blades (shut-off)

   b. Vinyl edge seals, thermoplastic elastomer seals for corrosive/chemical services.

4. Damper shafts shall be solid hexagonal or square shape.

5. Actuators shall be externally mounted to the damper and shall be a minimum of NEMA 2. All actuators shall be enclosed in a NEMA 4X case unless otherwise specified. Actuators located in classified spaces shall be enclosed in a NEMA 7 case unless otherwise specified. See Section 15608-HVAC Electric Control Systems for actuator requirements.

6. Damper leakage rate shall not exceed 3 cfm/sq. ft. at 1” w.g.

7. Reference: SMACNA Standards.

D. Aluminum Motorized Dampers:

1. Manufacturer: Provide products of one of the following:

a. Ruskin

b. Greenheck

c. Or equal

2. Frame, blade, axle, bearings, jamb seal, and linkage materials: 6063T5 Aluminum

3. Blades:

a. Opposed blades (modulating control) and Parallel blades (2 position shut-off)

b. Neoprene blade edge seals and flexible metal compressible jamb seals.

4. Damper shafts shall be solid hexagonal or square shape.

5. Actuators shall be externally mounted to the damper and shall be a minimum of NEMA 2. All actuators shall be enclosed in a NEMA 4X case unless otherwise specified. Actuators located in classified spaces shall be enclosed in a NEMA 7 case unless otherwise specified.

6. Reference: SMACNA Standards.

E. Duct Mounted Fire Dampers in Fire Walls with Rating of 2 Hours or Less:

1. NFPA 90A rated for 11/2hour service.

2. Blades, frame, and mounting angles same material as ductwork.

3. Accordion style folded blades.

4. 165 degrees F fusible link.

5. Approved for installation with 2hour fire rating.

6. Rated, manufactured, tested, and approved in accordance with UL 555.

7. Blades out of airstream when open (Style B).

8. Furnish with sleeved frame for duct connections.

9. Labeled for use in static mode.

10. Furnish dynamic and horizontal mounted dampers with springs for proper closure.

11. Corrosive Service Dampers: Type 316 stainless steel.

12. Manufacturers and Products:

a. Nailor Industries; Model 0130, Type B.

b. Ruskin; (D)IBD20, Type B.

F. Duct Mounted Fire Dampers in Walls with 3Hour or Greater Fire Rating:

1. NFPA 90A rated for 3hour service.

2. Blades, frame, and mounting angles.

3. Accordion style folding blades.

4. 165 degrees F fusible link.

5. Approved for installation in 4hour wall.

6. Rated, manufactured, tested, and approved in accordance with UL 555.

7. Blades out of airstream when open (Type B).

8. Furnish with sleeved frame for duct connection.

9. Labeled for use in static mode.

10. Furnish dynamic and horizontal mounted dampers with springs for proper closure.

11. Corrosive Service Dampers: Type 316 stainless steel.

12. Manufacturers and Products:

a. Nailor Industries; Model 0530, Type B.

b. Ruskin; IBD23, Type B.

G. Combination Louver/Dampers:

1. Manufacturer: Provide products of one of the following:

a. Ruskin

b. Greenheck

c. Approved Equal

2. Frame, blade, axle, bearings, jamb seal, and linkage materials: 6063T5 Aluminum

3. Inside and outside of all parts shall be coated with a corrosion resistant coating. The coating shall be Kynar 500 or approved equal. Final color selection shall be provided by the Owner. The Contractor shall submit a full color chart for selection and approval.

4. Frame shall be 0.125 inches thick

5. Front Blades:

   a. Drainable with minimum wall thickness of 0.081 inch

   b. Blades shall be angled at 37 degrees

6. Rear Blades:

   a. Double wall airfoil shape with minimum wall thickness of 0.14 inch

   b. Linkage shall be concealed in the frame

   c. Bearings shall be stainless steel

   d. Axles shall be stainless steel

7. Damper shafts shall be solid hexagonal or square shape.

8. Seals:

   a. Blade edge seals shall be extruded vinyl

   b. Jamb seals shall be compressible type of aluminum construction

9. Drain gutters shall be in head frame and each blade

10. Downspouts in jambs shall drain water from louver

11. Provide aluminum bird screens. Screens shall be expanded and flattened type.

H. Stationary Louvers:

1. Manufacturer: Provide products of one of the following:

   a. Ruskin

   b. Greenheck

   c. Or equal

2. Frame, blade, and jamb seal materials: 6063T5 Aluminum or 316 Stainless Steel

3. Inside and outside of all aluminum parts shall be coated with a corrosion resistant coating. The coating shall be Kynar 500 or approved equal. Final color selection shall be provided by the Owner. The Contractor shall submit a full color chart for selection and approval.

4. Frame shall be a minimum 0.125 inches thick for aluminum and 18 gauge for stainless steel

5. Blades:

   a. Drainable with minimum wall thickness of 0.081 inch for aluminum and 18 gauge for stainless steel
   b. Blades shall be angled at 37 degrees

6. Drain gutters shall be in head frame and each blade

7. Downspouts in jambs shall drain water from louver

8. Provide bird screens in identical material to match louver. Screens shall be expanded and flattened type.

I. Tiered Penthouse:

1. Manufacturer: Provide products of one of the following:

   a. Ruskin

   b. Greenheck

   c. Or equal

2. Frame, structural supports, sill flashing, blade, axle, bearings, jamb seal, and linkage materials: 6063T5 Aluminum

3. Inside and outside of all parts shall be coated with a corrosion resistant coating. The coating shall be Kynar 500 or approved equal. Final color selection shall be provided by the Owner. The Contractor shall submit a full color chart for selection and approval.

4. Louver section shall be Ruskin ELF81 profile or approved equal

5. Louver blades and penthouse covering shall be minimum of .081 inches thick

6. Sill flashing shall be 0.125” thick

7. Penthouse shall contain 1” of fiberglass roof insulation

8. Provide aluminum bird screens. Screens shall be expanded and flattened type.

J. Filter Bank:

1. Manufacturer: Provide products of one of the following:

   a. Flanders

   b. or equal

2. Housing and internal rack materials shall match the associated ductwork material.

3. Filter box shall have flanged duct connections.

4. Filters bank shall be V-type arrangement with a minimum of two (2) 2” MERV 8 pleated filters.

5. Filter bank shall have a differential pressure switch set to indicate when the filters are dirty. The contacts shall be located in a NEMA 12 rated enclosure in spaces that have unclassified area classifications. In areas that have area classifications, the contacts shall be in a NEMA 7 rated enclosure or the device shall be rated for installation in spaces that are classified as Class I, Div I or Div II.

K. Sheet Metal Safing: Provide sheet metal safing of the same material as the duct, to close off and seal airtight all unused areas behind louvers.

L. Screens: ½-inch (13 mm) mesh, with screen material matched duct material, framed with bolt holes unless indicated otherwise.

M. Registers and Grilles:

1. Manufacturer: Provide product(s) of one of the following:

a. Titus (Basis of Design, model numbers scheduled on drawings)

b. Anemostat

c. Price Industries

d. Nailer Industries, Inc.

e. Hart and Cooley.

2. Units shall be factory-fabricated of Type 316 stainless steel construction for stainless steel and FRP ductwork and aluminum for aluminum ductwork. They shall distribute the specified air volume (cubic feet per minute).

3. Outlets for diffusion, spread, throw, and noise level shall be as required for specified performance.

4. Diffusers and registers shall be provided with volume damper with accessible operator, unless otherwise indicated; or if standard with the manufacturer, an automatically controlled device will be acceptable. Volume dampers shall be opposed blade type for all diffusers and registers.

5. Registers shall be provided with sponge-rubber gasket between flanges and wall or ceiling.

6. An additional volume damper shall be installed in duct stub to each air outlet for balancing of air volume.

7. Supply Registers:

a. Supply registers shall be double deflection type, complete with adjustable vertical face bars and a key operated opposed blade damper.

8. Air extracting devices shall be installed at all collar take-offs to supply registers. The air extracting devices shall have two sets of individually adjustable blades to equalize flow and control volume at collar takeoffs and shall be gasketed around the perimeter.

9. Exhaust and Return Registers and Grilles:

a. Exhaust and return registers shall be furnished with fixed vertical face bars, set straight, and a key operated opposed blade damper.

N. Duct-Mounted Access Doors and Panels:

1. Provide access doors at all duct connections dampers for access and maintenance of damper motor actuators and linkages.

2. Fabricate doors and panels airtight and suitable for duct pressure class.

3. Seal around frame attachment to duct and door to frame with neoprene.

4. Door and frame to be of same material as duct.

O. Flexible Connectors unless indicated otherwise shall meet the following requirements:

1. Self-extinguishing material shall meet NFPA 90A, NFPA 701 and UL-214 Standards.

2. Material:

a. Commercial grade neoprene coated woven fiberglass, Proflex by DUCTMATE, or approved equal.

b. Corrosion/chemical resistant applications shall be of Teflon coated woven fiberglass fabric. Minimum density 18 oz./sq. yd. and rated to 500 F.

3. Extra wide edge connectors factory fabricated with a strip of fabric. Material of connectors shall match duct material.

P. Instrument Test Holes: Material to suit duct material, including screw. Size holes to allow insertion of pitot and other testing instruments, and length to suit duct insulation thickness.

Q. Turning Vanes:

1. Turning vanes shall be double wall turning vanes fabricated from the same material as the duct. Mounting rails shall have friction insert tabs that align the vanes automatically.

2. Tab spacing shall be as specified in Figure 2-3 of the 1995 SMACNA Manual, “HVAC Duct Construction Standards, Metal & Flexible” Second Edition standard. Rail systems with non-standard tab spacing shall not be accepted.

3. Due to tensile loading, vanes shall be capable of supporting 250 pounds when secured according to the manufacturer’s instructions.

R. Drip Pans

1. Drip pans shall be welded 16 gauge, type 316 Stainless Steel.

2. Drip pans shall extend 2” beyond the dimensions of the equipment of ductwork above on all sides.

3. Drip pan shall have a minimum 1” lip.

4. Drip pan shall be sloped to a ¾” copper type L drain line such that pooling or standing water is prevented. The drain shall be continuously sloped a minimum of 1/8” per foot. The drain shall terminate 6” above the sink or nearest floor drain.

5. Provide a dielectric coupling between the stainless steel drip pan and copper drain line to prevent contact between dissimilar metals.

6. Contractor shall coordinate drip pan supports with the existing structural construction above. The Contractor shall provide all supplemental beams and channels needed. The support system shall be capable of supporting the weight of a full drip pan plus an additional 300 lb. load.

7. See Section 15990 - HVAC Testing, Adjusting, and Balancing for drip pan testing procedures.

S. Hot Water Duct Heater

1. Duct heater shall consist of a cabinet, heating coil, and headers.

2. Duct heater cabinet materials shall match duct material. Cabinet shall have flanged connections for mating with adjacent ductwork. The cabinet shall be reinforced to limit deflection to ½” and prevent casing pulsing and vibration. The cabinet shall be equipped with a 1” threaded and capped drain connection to allow the cabinet to be drained should the coil become damaged.

3. Heating coil shall consist of ½” copper tubes expanded into corrugated aluminum fins. Fin spacing shall not exceed 12 fins/inch. Coil headers shall be copper.

4. The heating coil and all copper piping shall be coated with a corrosion resistant coating. The coating shall be suitable for use for air typically found at a Wastewater Treatment facility which shall include warm moist air containing 5 ppm hydrogen sulfide.

5. 2-Way or 3-Way Modulating Valve

a. The Contractor shall furnish a 2-way modulating valve or 3-way converging modulating valve as indicated in the schedule

b. The valve shall have a brass body with stainless steel trim. Seats shall be PTFE

c. Valve shall be suitable for use with 60% propylene glycol solution

d. Actuator shall be proportional type with spring return, position feedback, and open and close end switches.

e. Actuator shall be NEMA 2 with a NEMA 4X external enclosure

f. 3-way converging valves shall be Belimo B3 series or approved equal. 2-way modulating valves shall be Belimo B2 series or approved equal. Actuator shall be Belimo AFRB series or approved equal.

6. Circuit Setter

a. The Contractor shall furnish a circuit setter valve as indicated in applicable equipment piping details

b. Valve shall be bronze body with brass ball construction.

c. Valve shall provide calibrated accurate flow control and measurement.

d. Valve shall be suitable for use with 60% propylene glycol solution at 250°F and a pressure of 200 psig.

e. Valve shall have a memory stop indicator, integrated EPT insert and check valve on differential pressure readout ports across valve seat, and calibrated nameplate.

2.05 DUCT INSULATION

A. Products and Manufacturers:

1. Provide insulation as made by one of the following:

a. Armacell – AP/Armaflex FS

b. Aeroflex – Aerocel

c. or equal

B. Insulation

1. Type: Elastomeric Closed Cell Foam

2. FM Approved

3. Application

   a. 1.5-inch thick where insulation is required. See Part 3 for required insulation installation locations.

4. Average thermal conductivity not to exceed 0.28 (Btu-in)/(hr-FT2-°F) at mean temperature of 75° F, temperature range -40° to 220° F; permeability not to exceed 0.20 by ASTM E96; water absorption 3 percent by ASTM D1056 and ozone resistant. The insulation shall have a flame spread rating of less than 25 and a smoke development of less than 50 per ASTM-E84.

5. Insulation shall be sealed vapor tight using an adhesive at all joints. The adhesive shall have a flame spread of less than 25 and a smoke development of less than 50 when tested per ASTM-E84.

C. Jacket

1. All insulation shall receive a 316 stainless steel jacket for stainless steel ductwork and aluminum for all other duct materials. The jacket shall be a minimum of 0.016 nominal thickness. Exposed insulation ends such as duct discharge points or overlapping insulation shall receive caps made of the same material as the jacketing.

2. Jacketing shall be secured with straps of the same material as the jacketing.

PART 3 -- EXECUTION

3.01 DELIVERY, STORAGE, AND HANDLING

A. Protect shop-fabricated and factory-fabricated ductwork, accessories and purchased products from damage during shipping, storage and handling.

B. Prevent end damage and prevent dirt and moisture from entering ducts and fittings. Where possible, store ductwork inside and protect from weather. If necessary to store outside, store above grade and enclose with waterproof wrapping.

3.02 INSTALLATION OF DUCTWORK

A. Examine areas and conditions under which ductwork is to be installed. Do not proceed with work until unsatisfactory conditions have been corrected in a manner acceptable to Installer.

B. Assemble and install ductwork in accordance with recognized industry practices, Manufacturer's installation instructions, and SMACNA standards to achieve the seal and leakage classes indicated in the Duct Construction Table at the end of this specification.

C. Install each run with minimum number of joints. Align ductwork accurately at connections, within 1/8" misalignment tolerance and with internal surfaces smooth.

D. Support ducts rigidly with suitable ties, braces, hangers and anchors of type which will hold ducts true-to-shape and to prevent buckling. Support vertical ducts at every floor.

E. Field Fabrication: Complete fabrication of work at project as necessary to match shop-fabricated work and accommodate installation requirements.

F. Locate ductwork runs, except as otherwise indicated, vertically and horizontally and avoid diagonal runs wherever possible. Locate runs as indicated by diagrams, details and notations or, if not otherwise indicated, run ductwork in shortest route which does not obstruct useable space or block access for servicing building and its equipment.

G. Hold ducts close to walls, overhead construction, columns, and other structural and permanent enclosure elements of building. Limit clearance to 3" where furring is shown for enclosure or concealment of ducts, but allow for insulation thickness, if any. Where possible, locate insulated ductwork for 1" clearance outside of insulation. Wherever possible in finished and occupied spaces, conceal ductwork from view, by locating in mechanical shafts, hollow wall construction or above suspended ceilings.

H. Do not encase horizontal runs in solid partitions, except as specifically shown. Coordinate layout with suspended ceiling and lighting layouts and similar finished work.

I. Turning vanes shall be installed in all miter elbows to permit air to make the abrupt turns with a minimum of turbulence. The turning vanes shall be quiet and free from vibration when the system is in operation. Vanes shall be installed in all short radius elbows in accordance with SMACNA Duct Construction standards.

J. The dial regulators for manual volume dampers shall be marked so that the "open" and "shut" positions are clearly identified. The dial regulators on insulated ductwork shall be mounted on an elevated platform which will finish flush with the surface of the insulation. Manual volume dampers shall be located at accessible points and wherever possible some distance from a duct transition or fitting. Care shall be taken during installation to make certain that sheet metal fasteners do not protrude into the duct and interfere with damper operation. Volume dampers shall be provided in each branch duct take off and in both ducts downstream of each trunk duct split.

K. Duct access doors shall be provided before and after duct mounted coils, within working distance of, and on the fusible link side of all fire dampers, adjacent to volume dampers, on the linkage side of automatic dampers, duct mounted sensors, and at all other apparatus requiring service or inspection in the duct system. Access doors shall be a minimum of 15 x 18 inches; where the size of the duct will not accommodate this size the doors shall be made as large as practical. The doors shall be rigid and airtight, and provided with neoprene gaskets, hinges and sash locks. Whenever space requirements are such that a hinged access door is impractical, a screw fastened liftout door shall be provided instead.

L. Test openings shall be installed in the ductwork at the points listed below. The openings shall be sealed by a screw cap and gasket, and shall be installed so that the insulation is

not disturbed when the cap is removed. The test openings shall be located as follows in all heating, ventilating, air conditioning, and dehumidification systems:

1. Upstream and downstream of each coil

2. In the outside air duct adjacent to the unit

3. In the return air duct adjacent to the unit

4. In the main supply duct on single zone units and in each zone supply duct on multizone units

5. Upstream and downstream of each filter bank

6. As indicated on the Contract Drawings

M. Air filter gauges for measuring the differential pressure through all filter banks shall be supplied and installed; one gauge shall be installed for each bank. The gauge shall be of the inclined tube differential type complete with 1" thick acrylic plastic body, mirrorpolished scale, builtin level vial, over pressure safety traps, signal flags, 2 vent valves for zeroing gauge, 2 static pressure tips, two 5foot lengths of 1/4" stainless steel tubing, 2 compression fittings, mounting hardware, a bottle of red gauge oil and instructions. The gauges shall have a range of 01.0 inch water column with minor divisions of .02 inch water column.

N. The Contractor shall install prefabricated roof curbs before the installation of roofing.

O. All air outlets shall be with rigid connection to the ductwork.

P. After the installation is completed, the Contractor shall seal all joints air tight. Sealants and tape shall have a flame spread not greater than 25 and a smoke developed rating of not over 50 per ASTM E-84.

3.03 INSULATION INSTALLATION

A. Insulation shall be installed on all outdoor ductwork carrying conditioned air, all ductwork carrying conditioned air through unconditioned spaces, and all ductwork carrying unconditioned air through conditioned spaces. Conditioned air is any air that has received any heating, cooling, or dehumidification from HVAC equipment. Conditioned spaces are any spaces that receive conditioned air. Return and exhaust ductwork serving a conditioned space is considered conditioned air.

B. Ductwork carrying cooled conditioned air passing through spaces that only receive heated conditioned air shall be insulated. Ductwork carrying cooled air for spaces that require year round cooling such as electrical rooms, shall be insulated when passing through spaces that are provided heated conditioned air during the heating season.

C. Follow manufacturer’s installation instructions and recommended adhesives. The installation method shall provide a continuous vapor barrier.

D. The insulation vapor barrier shall be maintained through all supports, flanges, reinforcement, and penetrations. Where the duct weight would deform the insulation

material at supports, the Contractor shall use fiberglass insulation blocks. The blocks shall be the same thickness as the insulation. The vapor barrier shall be maintained using a system approved by the insulation manufacturer for spanning the insulation block.

3.04 DAMPER AND LOUVER INSTALLATION

A. The Contractor shall install dampers and louvers per the manufacturer's installation instructions.

B. The Contractor shall install all reinforcement required for multi-section dampers and louvers to all the assembly to withstand the rated velocity and pressure of the individual damper and louver sections.

3.05 EQUIPMENT CONNECTIONS

A. Connect metal ductwork to equipment as indicated, provide flexible connection for each ductwork connection to equipment mounted on vibration isolators, and/or equipment containing rotating machinery. Provide access doors as indicated in the Contract Drawings and Specifications.

3.06 ADJUSTING AND CLEANING

A. Clean ductwork internally, unit by unit as it is installed, of dust and debris. Clean external surfaces of foreign substances which might cause corrosive deterioration of metal or, where ductwork is to be painted, might interfere with painting or cause paint deterioration.

B. At ends of ducts which are not connected to equipment or air distribution devices at time of ductwork installation, provide temporary closure of polyethylene film or other covering which will prevent entrance of dust and debris until time connections are to be completed.

3.07 MANUFACTURER'S FIELD SERVICES

A. The services of a qualified manufacturer's Technical Representative shall be provided. The manufacturer Technical Representative's services shall include the following site visits:

Service	**Total Days**	**No. of Trips**	**Remarks**
Installation Checkout	1	1	
Startup and Testing	1	1	
Training	1	1	

DUCT CONSTRUCTION SCHEDULE					
SERVICE	**PRESSURE CLASS**	**DUCT MATERIAL**	**SEAL CLASS**	**LEAKAGE CLASS**	**CONSTRUCTION STANDARDS**
All Ductwork	+/- 2 inwg.	Stainless Steel	A	12	SMACNA HVAC Duct Construction Standards

- END OF SECTION –

SECTION 15599 - HVAC INSULATION

PART 1 - GENERAL

1.01 RELATED DOCUMENTS

A. Drawings and general provisions of the Contract, including General and Supplementary Conditions and Division 1 Specification Sections, apply to this Section.

B. Specifications throughout all Divisions of the Project Manual are directly applicable to this Section, and this Section is directly applicable to them.

C. Division 7 Section “Firestopping”.

D. Division 15 Section “Metal Ductwork” for duct liners.

1.02 SUMMARY

A. The Contractor shall furnish all labor, equipment and material for the complete installation of the ductwork and HVAC piping insulation systems as indicated on the Drawings and specified herein.

B. This Section includes semi rigid and flexible duct, plenum, breeching insulation and HVAC piping insulation; insulating cements; factory and field-applied jackets; accessories and attachments; and sealing compounds.

1.03 REFERENCE SPECIFICATIONS, CODES, AND STANDARDS

A. Without limiting the generality of other requirements of the specifications, all work herein shall conform to the applicable requirements of the following documents. All referenced specifications, codes, and standards refer to the most current issue available at the time of Bid.

1. ASTM E84 “Standard Test Method for Surface Burning Characteristics of Building Materials”.

2. ASTM C533 “Standard Specification for Calcium Silicate Block and Pipe Thermal Insulation”.

3. NFPA 255 “Standard Method of Test of Surface Burning Characteristics of Building Materials”.

4. ASTM C921 “Standard Practice for Determining the Properties of Jacketing Materials for Thermal Insulation”.

5. ASTM C1071A “Standard Specification for Fibrous Glass Duct Lining Insulation”.

6. ASTM C1136 “Standard Specification for Flexible, Low Permeance Vapor Retarders for Thermal Insulation”.

1.04 SUBMITTALS

A. Shop Drawings: Submit for approval Shop Drawings showing the following:

1. Manufacturers' catalog literature, specifications, and illustrations with the following information:

a. Thermal properties.

b. Physical properties (thickness, density etc).

c. Fire hazard ratings.

d. Facing information.

e. Installation instructions.

f. Jointing recommendations for butt joints and longitudinal seam.

g. Fabrication instructions for duct fittings and valve insulation and coatings.

2. Schedule of Project Specific Product Data: Identify thermal conductivity, thickness, and jackets (both factory and field applied, if any), for each type of product indicated and for which type of duct or piping system it is associated with. Submit a tabular schedule for the entire project.

3. Samples: For each type of insulation and field-applied jacket. Identify each Sample, describing product and intended use. Submit 8-inch square sections of each sample material.

4. Installer Certificates: Signed by the Contractor certifying that installers comply with requirements.

1.05 QUALITY ASSURANCE

A. Installer Qualifications: Skilled mechanics who have successfully completed an apprenticeship program or another craft training program certified by the U.S. Department of Labor, Bureau of Apprenticeship and Training. Company or firm that employs the insulation installers shall have a minimum of 5 years experience in the business of installing HVAC related duct and piping insulation systems.

B. Fire-Test-Response Characteristics: As determined by testing materials identical to those specified in this Section according to ASTM E 84, by a testing and inspecting agency acceptable to authorities having jurisdiction. Factory label insulation and jacket materials and sealer and cement material containers with appropriate markings of applicable testing and inspecting agency.

C. Products shall not contain asbestos, lead, mercury, or mercury compounds.

D. Supply insulation products that assure excellent IAQ (Indoor Air Quality) performance through Greenguard Certification whenever possible.

E. Products that come in contact with stainless steel shall have a leachable chloride content of less than 50 ppm when tested according to ASTM C 871.

F. Insulation materials for use on austenitic stainless steel shall be qualified as acceptable according to ASTM C 795.

G. Design Criteria: Insulation systems including covering, mastics, adhesives, sealers and facings shall have the following fire hazard classifications:

1. Flame spread, 25 maximum.

2. Fuel contributed, 50 maximum.

3. Smoke developed, 50 maximum.

H. Source Quality Control: Perform the following tests and inspections at the factory:

1. Flame spread.

2. Smoke developed.

3. Fuel contributed.

I. Requirements of Regulatory Agencies:

1. Permits: Contractor shall obtain and pay for all required fees, inspections and approvals by authorities having jurisdiction.

2. Building Codes: Comply with applicable requirements of all State and local building codes.

3. Underwriters' Laboratories, Incorporated.

4. National Fire Protection Association.

J. Reference Standards: Comply with applicable provisions and recommendations of the following except as otherwise shown or specified:

1. Federal Specification HH 1 558B, Insulation Blocks, Boards, Blankets, Felts, Sleeves, Duct Fitting Covering.

2. ASTM C 547, Mineral Fiber Preformed Duct Insulation.

3. ASTM E 84, Surface Burning Characteristics of Building Materials.

K. Field Measurements: Take field measurements where required prior to installation to ensure proper fitting of Work.

1.06 PRODUCT DELIVERY, STORAGE AND HANDLING

A. Delivery of Material: Material shall be delivered to the job site in corrugated cartons.

B. Packaging: Ship insulation materials in containers marked by manufacturer with appropriate ASTM specification designation, type and grade, and maximum use temperature.

C. Storage of Material:

1. Store material in clean, dry area, out of the weather.

2. Material shall be tightly covered to protect against dirt, water, mechanical injury or chemical damage.

3. Material shall remain in original cartons until time of installation.

4. Insulation and Mold: Store all cartons of insulation elevated off the floor on pallets or wood blocking away from dust, dirt and debris. Store in a clean, dry, well-ventilated area. Carefully inspect any insulation that has been exposed to water. If insulation shows any sign of mold growth it must be discarded. If the material is wet but shows no sign of mold, it should be dried rapidly and thoroughly. If it shows signs of facing degradation from wetting, it should be replaced. Mineral fiber based air handling insulation used in the air stream must be discarded if exposed to water regardless of signs of mold.

1.07 JOB CONDITIONS

A. Protection:

1. All material applied in one day shall have the vapor barrier applied the same day and any exposed ends shall be temporarily protected with a moisture barrier and sealed to the duct.

2. Insulating materials shall, at all times, be protected from moisture.

3. Material shall be warehoused on or near the job site and drawn from this protected area as used.

1.08 DEFINITIONS

C. Greenguard: Greenguard Environmental Institute, independent testing of products for emissions of respirable particles and Volatile Organic Compounds (VOCs), including formaldehyde and other specific product-related pollutants. Provides independent, third-party certification of IAQ performance. Certification is based upon criteria used by EPA, OSHA and WHO.

D. IAQ: Indoor Air Quality

E. EPA: Environmental Protection Agency

F. WHO: World Health Organization

G. ASJ: All Service Jacket

H. SSL: Self-Sealing Lap

I. FSK: Foil-Scrim-Kraft; jacketing

J. PSK: Poly-Scrim-Kraft; jacketing

K. PVC: Polyvinyl Chloride

L. FRP: Fiberglass Reinforced Plastic

1.09 COORDINATION

A. Schedule insulation application after testing duct and piping systems. Insulation application may begin on segments of duct or piping that has satisfactory test results. Do not install insulation prior to building interior being fully enclosed and weather tight.

B. Coordinate clearance requirements with duct and piping installers for insulation application.

C. Coordinate size and location of supports, hangers, and insulation shields specified in Division 15 Section "Pipe Supports."

D. Coordinate clearance requirements with piping Installer for piping insulation application duct Installer for duct insulation application, and equipment Installer for equipment insulation application.

PART 2 - PRODUCTS

2.01 ACCEPTABLE MANUFACTURERS

A. Subject to compliance with the Specifications, provide products manufactured by one of the following:

1. Mineral-Fiber Insulation:

a. CertainTeed Manson.

b. Knauf FiberGlass GmbH.

c. Owens-Corning Fiberglas Corp.

d. Schuller International, Inc.

2. Flexible Elastomeric Thermal Insulation:

a. Armstrong World Industries, Inc.

b. Armacell Company

c. K-Flex USA

3. Closed cell elastomeric insulation bonded with laminated polymeric protective membrane or aluminum sheet.

a. Armacell Company

b. K-Flex Clad

4. Calcium Silicate Insulation:

a. Industrial Insulation Group (The); Thermo-12 Gold.

b. Owens-Corning Fiberglas Corp.

c. Pabco.

d. Schuller International, Inc.

5. Aluminum Metal Jacket:

a. Childers Products, Division of ITW; Metal Jacketing Systems.

b. PABCO Metals Corporation; Surefit.

c. RPR Products, Inc.; Insul-Mate.

2.02 PIPING INSULATION MATERIALS

A. Comply with requirements in Part 3 schedule articles for where insulating materials shall be applied.

B. Products shall not contain asbestos, lead, mercury, or mercury compounds.

C. Supply insulation products that assure excellent IAQ (Indoor Air Quality) performance through Greenguard Certification whenever possible.

D. Calcium Silicate Insulation for High Temperature Pipe:

2. Preformed Pipe Sections: Flat-, curved-, and grooved-block sections of noncombustible, inorganic, hydrous calcium silicate with a non-asbestos fibrous reinforcement. Comply with ASTM C 533, Type I.
3. Flat-, curved-, and grooved-block sections of noncombustible, inorganic, hydrous calcium silicate with a non-asbestos fibrous reinforcement. Comply with ASTM C 533, Type I.
4. Prefabricated Fitting Covers: Comply with ASTM C 450 and ASTM C 585 for dimensions used in preforming insulation to cover valves, elbows, tees, and flanges.

E. Fiberglass Piping Insulation: Mineral or glass fibers bonded with a thermosetting resin. Comply with ASTM C 547, Type I, Grade A, with factory-applied ASJ-SSL.

F. Flexible Closed Cell Elastomeric Piping Insulation: Closed-cell, or expanded rubber tubular material, ASTM C 534, Type I. Jacketing not required for interior application unless specified elsewhere.

G. Jackets for Piping Insulation: ASJ-SSL: ASJ with self-sealing, pressure-sensitive, acrylic-based adhesive covered by a removable protective strip; complying with ASTM C 1136, Type I.

1. Encase interior pipe fittings insulation with one-piece premolded PVC fitting covers, fastened as per manufacturer's recommendations.

2. Encase all exterior piping insulation with aluminum jacket and aluminum fittings with weather-proof construction.

   a. Aluminum Jacket: Comply with ASTM B 209 (ASTM B 209M), Alloy 3003, 3005, 3105 or 5005, Temper H-14.

   b. Factory cut and rolled to size with finish and thickness as indicated in pipe insulation schedule below in Part 3 of this Section.

   c. Moisture barrier for Indoor Applications: 1-mil thick, heat-bonded polyethylene and kraft paper.

   d. Moisture barrier for Indoor Applications: 3-mil thick, heat-bonded polyethylene and kraft paper.

   e. Provide factory fabricated fitting covers of same material and thickness as straight lengths of jacket. Elbows shall be pre-formed 2-piece or gore, 45- and 90-degree, short and long-radius elbows.

   f. Provide factory tee covers, flange and union covers, end caps and beveled and valve collars.

H. Staples, Bands, Wires, and Cement: As recommended by insulation manufacturer for applications indicated.

I. Adhesives, Sealers, and Protective Finishes: As recommended by insulation manufacturer for applications indicated.

2.03 DUCTWORK INSULATION MATERIALS

A. Comply with requirements in Part 3 schedule articles for where insulating materials shall be applied.

B. Products shall not contain asbestos, lead, mercury, or mercury compounds.

C. Supply insulation products that assure excellent IAQ (Indoor Air Quality) performance through Greenguard Certification whenever possible.

D. Products that come in contact with stainless steel shall have a leachable chloride content of less than 50 ppm when tested according to ASTM C 871.

E. Mineral-Fiber Board Thermal Insulation: Glass fibers bonded with a thermosetting resin. Comply with ASTM C 612, Type IB. For exposed duct and equipment applications, provide all-service jacket (ASJ) suitable for painting, manufactured from white outer facing kraft paper, reinforcing scrim, aluminum foil, and vinyl film. For unexposed duct and plenum applications, provide insulation with factory-applied FSK jacket.

F. Flexible Elastomeric Closed Cell Insulation: Average thermal conductivity not to exceed 0.27 (Btu-in)/(hr-FT2-°F) at mean temperature of 75° F, temperature range -40° to 220° F; permeability not to exceed 0.20 by ASTM E96; water absorption 3 percent by ASTM

D1056 and ozone resistant. Factory Mutual approved. Insulation materials shall have a closed-cell structure to provide a barrier to water vapor. Insulation material shall have an Ozone Depleting Potential (ODP) of zero, and be manufactured without CFCs, HFCs or HCFCs. Insulation shall have a Global Warming Potential (GWP) of zero.

1. Ductwork Insulation Compounds: Provide cements, adhesives, coatings, sealers, protective finishes and similar compounds as recommended by insulation manufacturer for applications indicated. All joints shall be made with Armaflex® 520 Adhesive or a contact adhesive approved by the insulation supplier that is suitable for creating a complete vapor seal.

2. Ultraviolet-Protective Coating: As recommended by insulation manufacturer.

3. Laminated bonded outdoor jacketing system: Closed cell elastomeric Armaflex insulation with a **12 mil thickness** laminated covering membrane (a UV protective white, blended polymeric top surface made with alternating layers of aluminum foil and polyester film coated with cold weather acrylic adhesive). Construction of laminate designed to provide UV resistance, high puncture and tear resistance.

   a. The membrane shall have a 10-year warranty against breakdown due to UV radiation. Insulation layer between outer layer of duct and exterior jacket shall be a mold-resistant flexible elastomeric thermal insulation. Its closed-cell structure prevents condensation and moisture wicking.

G. Ductwork Insulation Accessories: Provide staples, bands, wires, tape, anchors, corner angles and similar accessories as recommended by insulation manufacturer for applications indicated.

H. Ductwork Insulation Compounds: Provide cements, adhesives, coatings, sealers, protective finishes and similar compounds as recommended by insulation manufacturer for applications indicated.

PART 3 -- EXECUTION

3.01 INSPECTION AND PREPARATION

A. Examine areas and conditions under which mechanical insulation is to be installed. Do not proceed with work until unsatisfactory conditions have been corrected in manner acceptable to Installer.

B. Surface Preparation: Clean and prepare surfaces to be insulated. Before insulating, apply a corrosion coating to insulated surfaces as follows:

1. Carbon Steel Pipe: Coat carbon steel operating at a service temperature between 32 and 300 degree F with an epoxy coating. Consult coating manufacturer for appropriate coating materials and application methods for operating temperature range. Refer to Division 9 for finish coating requirements.

3.02 INDOOR PIPING INSULATION SCHEDULE

A. Condensate and Equipment Drain Water below 65 Degree F:

1. All Pipe Sizes: Insulation shall be the following:

a. Flexible Elastomeric: 3/4 inch thick.

B. Refrigerant Liquid, Suction and Hot-Gas Piping and Flexible Tubing:

1. All Pipe Sizes: Insulation shall be the following:

a. Flexible Elastomeric: 1 inch thick.

3.03 OUTDOOR PIPING INSULATION SCHEDULE

A. Refrigerant Liquid, Suction and Hot-Gas Piping:

1. All Pipe Sizes: Insulation shall be the following:

a. Flexible Elastomeric: 1 inches thick with field applied aluminum metal jacket.

3.04 DUCTWORK SYSTEM INSULATION SCHEDULE

A. Plenums and Ducts Requiring Insulation:

1. Indoor, concealed supply and outdoor air.
2. Indoor, exposed supply and outdoor air.
3. Indoor, Type I, commercial, kitchen hood exhaust.
4. Indoor, concealed exhaust between isolation damper and penetration of building ex- terior.
5. Indoor, exposed exhaust between isolation damper and penetration of building exterior.
6. Outdoor, concealed supply and return.
7. Outdoor, exposed supply and return.

B. Items Not Field Insulated:

1. Metal ducts with acoustical duct liner of sufficient thickness to comply with energy code and ASHRAE/IESNA 90.1.
2. Factory-insulated plenums and casings.
3. Flexible connectors.
4. Vibration-control devices.
5. Factory-insulated double walled round and flat-oval duct.
6. Factory-insulated access panels and doors.

C. Exposed, rectangular, supply-air duct, and plenum insulation shall be one of the following:

1. Externally thermally insulated with 1-1/2 inches thick and 3-lb/cu. ft. nominal density mineral-fiber board insulation.

2. Externally thermally insulated with 1-inches thick, flexible closed cell elastomeric foam insulation.

D. Concealed, rectangular, supply-air duct and plenum insulation shall be one of the following:

1. Externally thermally insulated with 2-inches thick and 1.5-lb/cu. ft. nominal density mineral-fiber blanket insulation.

2. Externally thermally insulated with 1-inches thick, flexible closed cell elastomeric foam insulation.

E. Outside Air, Plenums behind Louvers– Exposed and concealed (indoors):

1. Externally thermally insulated with 2-inches thick and 3-lb/cu. ft. nominal density mineral-fiber board insulation.

F. Exposed or concealed supply and outside air, round and flat-oval ductwork, (indoors):

1. Externally thermally insulated with 2-inches thick and 1.5-lb/cu. ft. nominal density mineral-fiber blanket insulation.

G. Outside Air, Plenums behind Louvers and Supply Ductwork – Exposed and concealed (indoors):

1. Externally thermally insulated with 1-inches thick, flexible closed cell elastomeric foam insulation.

H. Supply, Return and Outside Air Ductwork (Outdoors) – Exposed shall be one of the following:

1. Externally thermally insulated with 2-inch thick closed cell Armatuff laminated, UV protected jacket/insulation system.

2. Externally thermally insulated with 2-inch thick closed cell K-Flex aluminum clad laminated, UV protected jacket/insulation system.

3.04 INSTALLATION OF PIPING INSULATION

A. General: Install insulation products in accordance with manufacturer's written instructions, and in accordance with recognized industry practices to ensure that insulation serves its intended purpose.

B. Install insulation on pipe systems subsequent to installation of painting, testing, and acceptance of tests.

C. Install insulation materials with smooth and even surfaces. Insulate each continuous run of piping with full-length units of insulation, with single cut piece to complete run. Do not use cut pieces or scraps abutting each other.

D. Clean and dry pipe surfaces prior to insulating. Butt insulation joints firmly together to ensure complete and tight fit over surfaces to be covered.

E. Insulation Installation at Roof Penetrations: Install insulation continuously through roof penetrations.

F. Insulation Installation at Roof Penetrations: Install insulation continuously through roof penetrations.

1. Seal penetrations with flashing sealant.

2. For applications requiring only indoor insulation, terminate insulation above roof surface and seal with joint sealant. For applications requiring indoor and outdoor insulation, install insulation for outdoor applications tightly joined to indoor insulation ends. Seal joint with joint sealant.

3. Extend jacket of outdoor insulation outside roof flashing at least 2 inches below top of roof flashing.

4. Seal jacket to roof flashing with flashing sealant.

G. Insulation Installation at Underground Exterior Wall Penetrations: Terminate insulation flush with sleeve link-seal. Seal terminations with flashing sealant.

H. Insulation Installation at Aboveground Exterior Wall Penetrations: Install insulation continuously through wall penetrations.

1. Seal penetrations with flashing sealant.

2. For applications requiring only indoor insulation, terminate insulation inside wall surface and seal with joint sealant. For applications requiring indoor and outdoor insulation, install insulation for outdoor applications tightly joined to indoor insulation ends. Seal joint with joint sealant.

3. Extend jacket of outdoor insulation outside wall flashing and overlap wall flashing at least 2 inches.

4. Seal jacket to wall flashing with flashing sealant.

I Maintain integrity of vapor-barrier jackets on pipe insulation, and protect to prevent puncture or other damage.

J. Cover valves, fittings and similar items in each piping system with equivalent thickness and composition of insulation as applied to adjoining pipe run. Install factory molded,

precut or job fabricated units (at Installer's option) except where specific form or type is indicated.

K. Extend piping insulation without interruption through walls, floors and similar piping penetrations, except where otherwise indicated.

L. Butt pipe insulation against pipe hanger insulation inserts. For hot pipes, apply 3" wide vapor barrier tape or band over the butt joints. For cold piping apply wet coat of vapor barrier lap cement on butt joints and seal joints with 3" wide vapor barrier tape or band.

3.05 INSTALLATION OF DUCTWORK INSULATION

A. Install insulation products in accordance with manufacturer's written instructions, and in accordance with recognized industry practices to ensure that insulation serves its intended purpose.

B. Install insulation materials with smooth and even surfaces.

C. Clean and dry ductwork prior to insulating. Butt insulation joints firmly together to ensure complete and tight fit over surfaces to be covered.

I. Maintain integrity of vapor-barrier on ductwork insulation, and protect it to prevent puncture and other damage.

J. Install insulation with tight longitudinal seams and end joints. Bond seams and joints with adhesive recommended by insulation material manufacturer.

K. Install insulation with least number of joints practical.

E. Extend ductwork insulation without interruption through walls, floors and similar ductwork penetrations, except where otherwise indicated.

F. Corner Angles: Install corner angles on external corners of insulation on ductwork in exposed finished spaces before covering with jacketing.

G. For exterior ductwork insulation, install using manufacturer’s recommended adhesives or with pre-applied pressure sensitive adhesive (PSA) for application to large, flat or curved metal surfaces. For all ductwork insulation the seams must be installed in compression and sealed with Armaflex Adhesives. Cover exterior insulation seams with ArmaTuff Seal Tape.

1. Armaflex 520 Adhesive is a contact adhesive: therefore it must be applied to both surfaces, allowed to get tacky, and the surfaces joined with pressure. Exterior duct work must be pitched to allow rain water to run off the insulation.
2. The application temperature should be above 40° F and below 100° F.
3. Follow manufacturer’s step by step instructions for preparation, cutting, fitting, adhering and sealing techniques.

3.06 DELIVERY, STORAGE, AND HANDLING

A. Deliver insulation, coverings, cements, adhesives, and coatings to site in containers with manufacturer's stamp or label, affixed showing fire hazard indexes of products.

B. Protect insulation against dirt, water, and chemical and mechanical damage. Do not install damaged or wet insulation; remove from project site.

3.07 PROTECTION AND REPLACEMENT

A. Replace damaged insulation which cannot be repaired satisfactorily, including units with vapor barrier damage and moisture saturated units.

- END OF SECTION -

SECTION 15616 - HVAC TESTING, ADJUSTING, AND BALANCING

PART 1 - GENERAL

1.01 THE REQUIREMENT

A. This Section specifies the requirements and procedures for testing, adjusting, and balancing the HVAC systems. Requirements include measurement and establishment of the fluid quantities of the HVAC systems as required to meet design specifications, and recording and reporting the results.

B. The following HVAC systems shall be tested, adjusted and balanced:

1. Supply air systems, all pressure ranges, including new and existing systems

2. Exhaust air systems

3. Outside air systems, including new and existing systems

4. Air Heating systems

5. Hot Water systems

6. Air Cooling systems

7. Cooling Water systems

8. Verify HVAC Master Control Station (HMCS) operation

C. This Section does not include specifications for materials for patching HVAC systems, or specifications for materials and installation of adjusting and balancing devices. If devices must be added to achieve proper adjusting and balancing, refer to the respective system sections for materials and installation requirements.

1.02 DEFINITIONS

A. Systems testing, adjusting, and balancing is the process of checking and adjusting all the building environmental systems to produce the design objectives. It includes the balance of air distribution, water distribution, the adjustment of total system to provide design quantities, the electrical measurement, and the verification of performance of all equipment and automatic controls.

1. Test: To determine quantitative performance of equipment.

2. Adjust: To regulate the specified fluid flow rate and air patterns at the terminal equipment (e.g., reduce fan speed, throttling).

3. Balance: To proportion flows within the distribution system (submains, branches, and terminals) according to specified design quantities.

4. Procedure: Standardized approach and execution of sequence of work operations to yield reproducible results.

5. Report Forms: Test data sheets arranged for collecting test data in logical order for submission and review. These data should also form the permanent record to be used as the basis for required future testing, adjusting, and balancing.

6. Terminal: The point where the controlled fluid enters or leaves the distribution system. These are supply inlets or supply outlets on air terminals and exhaust or return inlets on air terminals such as registers, grilles, diffusers, louvers, and hoods.

7. Main: Duct containing the system's major or entire fluid flow.

8. Submain: Duct containing part of the systems' capacity and serving two or more branch mains.

9. Branch Main: Duct serving two or more terminals.

10. Branch: Duct serving a single terminal.

1.03 SUBMITTALS

A. Prior to balancing, the Contractor shall perform Equipment Testing as indicated in section 3.1. Prior to performing System Testing, the Contractor shall have the system balanced as indicated in section 3.1.

B. Submit proof that the Test and Balance Engineer assigned to supervise the procedures, and the technicians proposed to perform the procedures meet the qualifications specified below.

C. The Contractor shall submit a detailed testing procedure which shall include:

1. Step by step instructions as to how the tests will be performed including but not limited to temporary layout modifications, procedures for testing instrument functionality, steps required to prove that the Control Strategy has been properly implemented, and steps required to compensate for ambient air temperature versus normal operating temperature such as thermostat setpoint adjustment. The steps shall indicate all actions to be taken, the expected result of the actions, and what the expected result verifies in regards to proving that the unit operates as designed.

2. A list of any additional or temporary equipment necessary to perform the tests.

3. Provide a checklist of items that will checked during the test as listed in Section 3.1. Each item shall be initialed by the Contractor’s Testing and Balancing

Technician conducting the test. The Contractor's Testing and Balancing Engineer shall sign and date the bottom of the test sheet verifying all results.

D. The Contractor shall submit the signed results of the equipment testing to the Engineer for approval. The equipment manufacturer's representative shall be present for all testing. The results shall include a letter from the manufacturer's representative stating that the equipment has been installed per the manufacturer's installation requirements and is in satisfactory working order.

E. The Contractor shall submit an adjusting and balancing procedure which shall include:

1. Standard procedure the Contractor will use for balancing the systems.

2. Tables specific to the equipment for this project for recording the required information from Part 3 – Execution.

3. Flow diagrams specific to the systems present on this project. The flow diagrams shall contain at a minimum:

   a. A diagrammatic representation of the system

   b. All duct or pipe sizes

   c. All inline equipment such as fans, pumps, duct heaters, filters, and strainers

   d. All air inlet and outlet grilles and registers

   e. All dampers, valves, or flow control equipment

4. A list of the equipment the balancing technician will use to balance the system

F. Submit completed adjusting and balancing reports bearing the seal and signature of the Test and Balance Engineer. The reports shall be certified proof that the systems have been adjusted and balanced in accordance with the referenced standards; are an accurate representation of how the systems have been installed; are a true representation of how the systems are operating at the completion of the testing, adjusting, and balancing procedures; and are an accurate record of all final quantities measured, to establish normal operating values of the systems. The adjusting and balancing reports shall contain at a minimum

1. Report Format: Report forms shall be those standard forms prepared by the referenced standard for each respective item and system to be tested, adjusted, and balanced. Bind report forms complete with schematic systems diagrams and other data in reinforced, vinyl, three-ring binders. Provide binding edge labels with the project identification and a title descriptive of the contents. Divide the contents of the binder into the below listed divisions, separated by divider tabs:

   a. General Information and Summary

   b. Technician Qualifications and Certificates

c. Completed Adjusting and Balancing Report including procedure

d. Temperature Control System Settings

e. Calibration Certificates of all Instruments Used

2. Report Contents: Provide the following minimum information, forms and data:

a. General Information and Summary: Inside cover sheet to identify testing, adjusting, and balancing agency, Contractor, Owner, Architect, Engineer, and Project. Include addresses, and contact names and telephone numbers. Also include a certification sheet containing the seal and name, address, telephone number, and signature of the Certified Test and Balance Engineer.

b. Calibration Certificates: Submit proof that all required instrumentation has been calibrated to tolerances specified in the referenced standards, within a period of six months prior to the date of the start of balancing.

c. Flow Diagrams

d. Balancing Datasheets

e. Balancer Comments: The Balancer shall provide comments, suggestions, and corrective actions to any issues that occur during balancing including excessive noise, excessive vibration, or an inability to meet design conditions.

1.04 QUALITY ASSURANCE

A. Test and Balance Personnel Qualifications: The personnel responsible for testing, adjusting, and balancing the specified systems shall have at least three years' experience in testing and balancing systems similar to this project and shall be an employee of the installer or an independent testing and balancing agency.

B. Codes and Standards:

1. NEBB, "Procedural Standards for Testing, Adjusting, and Balancing of Environmental Systems."

2. ASHRAE Handbook, 1984 Systems Volume, Chapter 37, Testing, Adjusting, and Balancing.

C. Contractor shall provide all necessary instrumentation, tools, ladders, and labor etc. to complete all air balancing, tests and adjustments.

D. Instrumentation shall be in accordance with NEBB, AABC, or SMACNA requirements and shall be calibrated to the accuracy standards demanded by these organizations.

E. All testing, adjusting, and balancing of air systems shall be performed in compliance with the standard procedure manual published by the testing, adjusting, and balancing organization affiliated with NEBB, AABC, or SMACNA Organization. Testing, adjusting, and balancing technician shall hold current certification by one of these organizations. Submit certification to Engineer for approval.

F. Contractor shall be solely responsible for the protection and safeguarding of his work and shall provide every protection against accidents, injury, and damage to persons and property.

G. Contractor shall keep dust, dirt, and debris to an absolute minimum and reinstall all removed ceiling components to their original positions at the end of each day.

H. Contractor shall be fully responsible for removal and reinstallation of ceiling system and replacement of any component damaged.

1.05 SEQUENCING AND SCHEDULING

A. Systems shall be fully operational prior to beginning procedures.

1.06 RELATED SECTIONS

A. Section 15500 - Basic HVAC Requirements

B. Section 15590 - Fans

C. Section 15598 – Metallic Ductwork and Duct Accessories

PART 2 - MATERIALS

(NOT USED)

PART 3 - EXECUTION

3.01 HVAC TESTING

A. Equipment to be tested shall include at a minimum all fans, duct heaters, unit heaters, CRAC units, H&V units, dehumidifiers, and electric control systems. The specific requirements for equipment indicated below shall be performed in addition to any requirements of the Manufacturer for startup and initial operation.

B. The equipment manufacturer's representative shall be present for all testing.

C. Fans:

1. Pre Startup Inspection:

a. Verify proper equipment mounting and setting

b. Verify that control, interlock and power wiring is complete

c. Verify alignment of motors and drives

d. Verify proper belt tension

e. Verify proper duct connections and accessories

f. Verify that lubrication is completed

g. Verify that equipment is in good condition and free from damage

h. Verify that all packing materials, temporary stops, and temporary supports used during shipping have been removed

i. Verify that equipment and associated ducts are free from debris

j. Verify that equipment is installed per the Manufacturer's requirements

2. Equipment Test:

a. Prior to energizing motor, verify and record voltage of power supply

b. Bump motor to verify direction of rotation

c. Run the fan for 1 hour of continuous trouble free operation. Any issues or stops required for tuning or repairs shall cause the test to be restarted from the beginning of this procedure.

d. Monitor heat build-up in bearings

e. Monitor for any abnormal noises or vibration

f. Check motor loads against nameplate data

g. Record fan sound levels ten (10) feet from the surface of the fan in five (5) minute intervals during 1 hour run period. The sound levels shall not be used for any sound rating verification. The sound levels shall be used for information by the owner to identify areas that will require hearing protection.

3. System Test:

a. Verify the system operates per the respective equipment specification 15590-Fans and Section 15608-HVAC Electric Control Systems including all modes of operation, interlocks, alarms, and safeties.

D. Pumps:

1. Pre Startup Inspection:

a. Verify proper equipment mounting and setting

b. Verify that control, interlock and power wiring is complete

c. Verify alignment of motors and drives

d. Verify proper pipe connections and accessories

e. Verify that lubrication is completed

f. Verify that equipment is in good condition and free from damage

g. Verify that all packing materials, temporary stops, and temporary supports used during shipping have been removed

h. Verify that strainers are clean and screens are in place

i. Verify that equipment is installed per the Manufacturer's requirements

2. Equipment Test:

a. Prior to energizing motor, verify and record voltage of power supply

b. Bump motor to verify direction of rotation

c. Run the pump for 1 hour of continuous trouble free operation. Any issues or stops required for tuning or repairs shall cause the test to be restarted from the beginning of this procedure.

d. Monitor heat build-up in bearings

e. Monitor for any abnormal noises or vibration

f. Check motor loads against nameplate data

g. Record pump sound levels ten (10) feet from the surface of the pump in five (5) minute intervals during 1 hour run period. The sound levels shall not be used for any sound rating verification. The sound levels shall be used for information by the owner to identify areas that will require hearing protection.

3. System Test:

a. Verify the system operates per the respective equipment specification and Section 15608-HVAC Electric Control Systems including all modes of operation, interlocks, alarms, and safeties.

E. Electric Duct Heaters

1. Pre Startup Inspection:

   a. Verify proper equipment mounting and setting

   b. Verify that control, interlock and power wiring is complete

   c. Verify proper duct connections and accessories

   d. Verify that equipment is in good condition and free from damage

   e. Verify that all packing materials, temporary stops, and temporary supports used during shipping have been removed

   f. Verify that equipment and associated ducts are free from debris

   g. Verify that equipment is installed per the Manufacturer's requirements

2. Equipment Test:

   a. Prior to energizing, verify and record voltage of power supply

   b. Run the duct heater for 1 hour of continuous trouble free operation. Any issues or stops required for tuning or repairs shall cause the test to be restarted from the beginning of this procedure. Any safety trips will cause this testing to be restarted from the beginning of this procedure. If the ambient air temperature is too high to have the coils energized constantly for 1 hour, the Contractor shall adjust the setpoint temperature of the duct heater. The Contractor shall coordinate this testing with all other trades. The Contractor is responsible for scheduling this testing and shall take into account any additional measures required to accomplish the testing based on the ambient air temperature. The Contractor shall not raise the temperature in the space to a point where it will cause damage to any equipment in the space or create unsafe or uncomfortable working conditions for the workers as determined by the Resident Engineer. If the Resident Engineer determines that the ambient conditions will not allow the testing of this equipment because the Contractor has scheduled the testing for a point in the season known to be warm, the Contractor shall provide any temporary cooling required to run this test including but not limited to temporary fans, ductwork, chillers, generators, cooling towers, make-up water supplies, heat exchangers, or air conditioners at no additional cost to the project.

   c. Monitor and record the inlet and outlet air temperatures

   d. Monitor for any abnormal noises or temperature fluctuation

   e. Check heater electrical loads against nameplate data

3. System Test:

a. Verify the system operates per Section 15604-Electric Resistance Heaters and 15608-HVAC Electric Control Systems including all modes of operation, interlocks, alarms, and safeties.

F. Electric Unit Heaters

1. Pre Startup Inspection:

a. Verify proper equipment mounting and setting

b. Verify that control, interlock and power wiring is complete

c. Verify that equipment is in good condition and free from damage

d. Verify that all packing materials, temporary stops, and temporary supports

e. used during shipping have been removed

f. Verify that equipment is free from debris

g. Verify that equipment is installed per the Manufacturer's requirements

2. Equipment Test:

a. Prior to energizing, verify and record voltage of power supply

b. Run the unit heater for 1 hour of continuous trouble free operation. Any issues or stops required for tuning or repairs shall cause the test to be restarted from the beginning of this procedure. Any safety trips will cause this testing to be restarted from the beginning of this procedure. If the ambient air temperature is too high to have the coils energized constantly for 1 hour, the Contractor shall adjust the setpoint temperature of the duct heater. The Contractor shall coordinate this testing with all other trades. The Contractor is responsible for scheduling this testing and shall take into account any additional measures required to accomplish the testing based on the ambient air temperature. The Contractor shall not raise the temperature in the space to a point where it will cause damage to any equipment in the space or create unsafe or uncomfortable working conditions for the workers as determined by the Resident Engineer. If the Resident Engineer determines that the ambient conditions will not allow the testing of this equipment because the Contractor has scheduled the testing for a point in the season known to be warm, the Contractor shall provide any temporary cooling required to run this test including but not limited to temporary fans, ductwork, chillers, generators, cooling towers, make-up water supplies, heat exchangers, or air conditioners at no cost to the project.

c. Monitor and record the inlet and outlet air temperatures

d. Monitor for any abnormal noises or temperature fluctuation

e. Check heater electrical loads against nameplate data

3. System Test:

a. Verify the system operates per Section 15604-Electric Resistance Heaters and 15608-HVAC Electric Control Systems including all modes of operation, interlocks, alarms, and safeties.

G. CRAC Units, Air Handling Units, Packaged DX Units, Split Systems, and Fan Coil Units

1. Pre Startup Inspection:

a. Verify proper equipment mounting and setting

b. Verify that control, interlock and power wiring is complete

c. Verify proper duct connections and accessories

d. Verify that lubrication is completed

e. Verify that equipment is in good condition and free from damage

f. Verify that all packing materials, temporary stops, and temporary supports used during shipping have been removed

g. Verify that equipment and associated ducts are free from debris

h. Verify that the refrigeration system has been evacuated and charged per the Manufacturer's requirements

i. Verify that equipment is installed per the Manufacturer's requirements

2. Equipment Test:

a. Prior to energizing unit, verify and record voltage of power supply

b. Run the unit for 1 hour of continuous trouble free operation. Any issues or stops required for tuning or repairs shall cause the test to be restarted from the beginning of this procedure. If the ambient air temperature is too low to have the refrigeration system running constantly for 1 hour, the Contractor shall take into account any additional measures required to accomplish the testing based on the ambient air temperature. The Contractor shall provide any temporary heating equipment required to run this test including but not limited to temporary fans, ductwork, heaters, generators, heat exchangers, combustion equipment, and fuel storage and pumping at no cost to the project. Use of any heating equipment that was installed as part of this work shall not be permitted to be used as a heat source.

c. Monitor discharge and return air temperatures

d. Monitor for any abnormal noises or vibration

e. Record fan sound levels ten (10) feet from the surface of the equipment in five (5) minute intervals during 1 hour run period. The sound levels shall not be used for any sound rating verification. The sound levels shall be used for information by the owner to identify areas that will require hearing protection.

3. System Test:

a. Verify the system operates per Section 15750-Control Room Air Conditioning Units and 15608-HVAC Electric Control Systems including all modes of operation, interlocks, alarms, and safeties.

H. H&V Units

1. Pre Startup Inspection:

a. Verify proper equipment mounting and setting

b. Verify that control, interlock and power wiring is complete

c. Verify alignment of motors and drives

d. Verify proper belt tension

e. Verify proper duct connections and accessories

f. Verify that lubrication is completed

g. Verify that equipment is in good condition and free from damage

h. Verify that all packing materials, temporary stops, and temporary supports used during shipping have been removed

i. Verify that equipment and associated ducts are free from debris

j. Verify that equipment is installed per the Manufacturer's requirements

2. Equipment Test:

a. Prior to energizing unit, verify and record voltage of power supply

b. Run the unit for 1 hour of continuous trouble free operation in heating mode and for 1 hour of continuous trouble free operation in ventilating mode. Any issues or stops required for tuning or repairs shall cause the test to be restarted from the beginning of the respective 1 hour test. Any safety trips will cause this testing to be restarted from the beginning of this procedure.

If the ambient air temperature is too high to have the unit heating constantly for 1 hour, the Contractor shall adjust the setpoint temperature of the unit. The Contractor shall coordinate this testing with all other trades. The Contractor is responsible for scheduling this testing and shall take into account any additional measures required to accomplish the testing based on the ambient air temperature. The Contractor shall not raise the temperature in the space to a point where it will cause damage to any equipment in the space or create unsafe or uncomfortable working conditions for the workers as determined by the Resident Engineer. If the Resident Engineer determines that the ambient conditions will not allow the testing of this equipment because the Contractor has scheduled the testing for a point in the season known to be warm, the Contractor shall provide any temporary cooling required to run this test including but not limited to temporary fans, ductwork, chillers, generators, cooling towers, make-up water supplies, heat exchangers, or air conditioners at no additional cost to the project.

c. Monitor heat build-up in bearings

d. Monitor for any abnormal noises or vibration

e. Check unit loads against nameplate data

f. Record fan sound levels ten (10) feet from the surface of the fan in five (5) minute intervals during both 1 hour continuous operating periods.

3. System Test:

a. Verify the system operates per Section 15720-Heating and Ventilation Units and 15608-HVAC Electric Control Systems including all modes of operation, interlocks, alarms, and safeties.

I. Dehumidification Units

1. Pre Startup Inspection:

a. Verify proper equipment mounting and setting

b. Verify that control, interlock and power wiring is complete

c. Verify alignment of motors and drives

d. Verify proper belt tension

e. Verify proper duct connections and accessories

f. Verify that lubrication is completed

g. Verify that equipment is in good condition and free from damage

h. Verify that all packing materials, temporary stops, and temporary supports used during shipping have been removed

i. Verify that equipment and associated ducts are free from debris

j. Verify that refrigeration system has been properly evacuated and charged per the Manufacturer's requirements (applicable to DX type dehumidifiers only)

k. Verify that equipment is installed per the Manufacturer's requirements

2. Equipment Test:

a. Prior to energizing unit, verify and record voltage of power supply

b. Run the unit for 1 hour of continuous trouble free operation in dehumidifying mode and for 1 hour of continuous trouble free operation in heating mode. Any issues or stops required for tuning or repairs shall cause the test to be restarted from the beginning of the respective 1 hour test. Any safety trips will cause this testing to be restarted from the beginning of this procedure. If the ambient air temperature is too high to have the unit heating constantly for 1 hour, the Contractor shall adjust the setpoint temperature of the unit. The Contractor shall coordinate this testing with all other trades. The Contractor is responsible for scheduling this testing and shall take into account any additional measures required to accomplish the testing based on the ambient air temperature. The Contractor shall not raise the temperature in the space to a point where it will cause damage to any equipment in the space or create unsafe or uncomfortable working conditions for the workers as determined by the Resident Engineer. If the Resident Engineer determines that the ambient conditions will not allow the testing of this equipment because the Contractor has scheduled the testing for a point in the season known to be warm, the Contractor shall provide any temporary cooling required to run this test including but not limited to temporary fans, ductwork, chillers, generators, cooling towers, make-up water supplies, heat exchangers, or air conditioners at no additional cost to the project. The Contractor shall run the dehumidification test when the outdoor dewpoint is above 55°F.

c. Monitor heat build-up in bearings

d. Monitor for any abnormal noises or vibration

e. Check unit loads against nameplate data

f. Record fan sound levels ten (10) feet from the surface of the fan in five (5) minute intervals during both 1 hour continuous operating periods.

3. System Test:

a. Verify the system operates per Section 15735-Dehumidification Units and 15608-HVAC Electric Control Systems including all modes of operation, interlocks, alarms, and safeties.

J. Drip Pans

1. Drip pans and drains shall be hydrostatically tested under gravity of a filled drip pan and drain line for a minimum of 30 minutes. Any leaks shall be corrected and the drip pan/drains retested until a watertight drip pan drainage system is confirmed.

K. Ductwork

1. All openings in the ductwork shall be temporarily sealed and the ductwork shall be pressurized and leak tested to demonstrate that the installation meets the specified SMACNA leakage class requirements. The Contractor shall follow SMACNA procedures for testing as outlined in SMACNA's HVAC Air Duct Leakage Test Manual.

L. Piping

1. Piping shall be tested as indicated in specification 15552 – HVAC Hydronic Piping and 15553 – HVAC Copper Piping.

M. At the completion of all of the individual equipment testing, the Contractor perform a HVAC System Run Test. The Run Test shall consist of operating the entire HVAC system as a whole using automatic controls for a period of not less than 15 consecutive days with no significant disruptions, repairs, reprogramming, or outages. Any issues during this period shall reset the testing period until it passes.

3.02 ADJUSTMENT AND BALANCING REQUIREMENTS

A. Identify and list size, type, and manufacturer of all equipment to be balanced, including air terminals and all end user equipment.

B. Test and record motor voltages, running amperes, shaft rpm and power factor including motor nameplate data, and starter heater ratings for each unit listed above.

C. Air Equipment Balancing

1. The Contractor shall start the fan and verify that the fan amperage and speed are within the design requirements. The Contractor shall then proportionally balance the air distribution system using the dampers at the air terminals. When the system is proportionally balanced, the Contractor shall adjust the fan speed to achieve the total design flowrate of the system. Fan speed adjustment shall be accomplished by adjusting variable pitch drives or by replacing the fan sheaves. The Contractor shall then take final readings for the total system flow as well as readings for each air terminal.

2. For all ducted air systems, the Contractor shall measure the flow rate in cfm at each air inlet, at the fan, and at each outlet for each system. The Contractor shall provide this information in the report to demonstrate that the system as installed meets the seal class rating as indicated in section 15598 - Metallic Ductwork and Duct Accessories and section 15599 – Fiberglass Ductwork and Duct Accessories.

3. Test and record the following:

    a. Fan system static pressure.

    b. All fan speeds.

    c. Air quantity delivered by each grille and register.

    d. Pressure drop across each piece of inline equipment such as a duct heater or filter bank. Filters shall be new and clean at time of testing and balancing.

    e. Final damper and air extractor positions for all dampers and extractors

4. Distribution:

    a. Adjust volume dampers, control dampers, etc., to provide the proper design CFM in ducts.

5. Air Terminals:

    a. Identify each air terminal as to location and determine required flow reading.

    b. Test and adjust each air terminal to within flow rate tolerance of design requirements as listed below. Under no circumstances shall the balancing impact the pressurization of spaces that are required to have a specific pressurization:

        i. Diffusers and Supply Registers: 0% to +10%

        ii. Return Registers: 0% to -10%

        iii. Exhaust Registers: 0% to -10%

6. Verification:

    a. At the completion of the balancing work, the Contractor shall check and record the flow rate and static pressure at all supply, return, and exhaust air points to show final balanced conditions. The Contractor shall provide in the report a table with a summation of readings comparing the required cfm, final cfm, and final static pressure for each supply, return, and exhaust terminal and all final damper positions.

    b. Verify design cfm at fans as described above.

c. If the air systems are not properly balanced, the Contractor shall re-balance and recheck all data.

D. Hydronic Equipment Balancing

1. For hydronic systems that operate on a constant pressure differential, the balancer shall determine the minimum pressure differential that will allow the system to balance at maximum system flow. The balancing valve for the equipment that is deemed to have the highest system resistance shall not be more than 10% closed. The balancer shall set this loop differential pressure value in the system controls.

2. For all hydronic systems, the Contractor shall measure the flow rate in gpm at each piece of equipment or bypass station for each system. The Balancer shall set all pieces of equipment to simultaneously operate at maximum design flow. The Contractor shall provide all information in the report.

3. Test and record the following:

   a. Pump suction and discharge pressures, pipe sizes, and gauge height

   b. All pump speeds

   c. Flowrate delivered to all equipment

   d. Final balancing valve position

4. Distribution:

   a. Adjust balancing valves, control valves, etc to provide the proper design gpm to equipment.

5. Hydronic Equipment:

   a. Identify each end user of the hydronic system including location and required flow reading.

   b. Test and adjust each end user to within +/- 5% of the design flow.

6. Verification:

   a. At the completion of the balancing work, the Contractor shall check and record the flow rate and pressure at all hydronic equipment to show final balanced conditions. The Contractor shall provide in the report a table with a summation of readings comparing the required gpm, final gpm, and all final balancing valve positions.

   b. Verify design flow at pumps as described above.

   c. If the hydronic systems are not properly balanced, the Contractor shall re-balance and recheck all data.

E. The testing and balancing activities described in this Section shall culminate in a report to be provided in quadruplicate (4), individually bound and also provided electronically to the Engineer for approval. Neatly type and arrange data. Include with the data, the dates tested, personnel present, weather conditions, nameplate record of test instrument and list all measurements taken after all corrections are made to the system. Record all failures and corrective action taken to remedy incorrect situation. The intent of the report is to provide a reference of actual operating conditions for the Owner's operations personnel.

F. All measurements and recorded readings (of air, water, electricity, etc.) that appear in the report must have been made at the Project Site by the permanently employed technicians or engineers of the TAB Firm.

3.03 PERFORMING TESTING, ADJUSTING, AND BALANCING

A. Perform testing and balancing procedures on each system identified in accordance with the detailed procedures outlined in the referenced standards.

B. Cut insulation and ductwork for installation of test probes to the minimum extent necessary to allow adequate performance of procedures.

C. Patch insulation, ductwork, and housings using materials identical to those removed.

D. Seal ducts, test, and repair leaks created during the testing and balancing procedures on the hydronic and air systems.

E. Seal insulation to re-establish integrity of the vapor barrier at all locations where the vapor barrier was disturbed during the testing and balancing procedures.

F. Mark equipment settings, including damper control positions, valve indicators, fan speed control levers, and similar controls and devices, to show final settings. Mark with paint or other suitable, permanent identification materials.

G. Retest, adjust, and balance systems subsequent to significant system modifications, and resubmit test results.

3.04 RECORD AND REPORT DATA

A. Record all data obtained during testing, adjusting, and balancing in accordance with standard practices and the specific requirements identified in this section.

B. Prepare report of recommendations for correcting unsatisfactory mechanical performances when system cannot be successfully balanced.

- END OF SECTION -

SECTION 15738 - UNITARY DIRECT EXPANSION SPLIT SYSTEMS

PART 1 - GENERAL

1.01 RELATED DOCUMENTS

A. Drawings and general provisions of the Contract, including General and Supplementary Conditions and Division 1 Specification Sections, apply to this Section.

B. Specifications throughout all Divisions of the Project Manual are directly applicable to this Section, and this Section is directly applicable to them.

1.02 SUMMARY

A. The Contractor shall furnish all labor, equipment and material for the complete installation of the air conditioning system as indicated on the Drawings and specified herein.

B. Heating, Ventilating and Air Conditioning systems shall be furnished and installed to operate as a system. The Contractor shall coordinate all requirements between manufacturers to insure unit responsibility and compatibility of the systems.

C. Work Included Under Other Sections:

1. 208V, 1-phase power wiring and conduit under Division 16, Electrical.

1.03 SUBMITTALS

A. The Contractor shall submit shop drawings on all equipment, accessories and appurtenances and all fabrication work or other mechanical and air conditioning work required, all in accordance with the requirements of Section 01300, Submittals.

B. Data to be submitted shall include but not be limited to:

1. Catalog data consisting of specifications, illustrations and a parts schedule that identifies the materials to be used for the various parts and accessories.

2. Electrical characteristics, wiring, diagrams, etc.

3. Piping connection drawings.

C. The Contractor shall submit operation and maintenance manual in accordance with the procedures and requirements set forth in the General Conditions and Division 1. Operation and Maintenance Manuals shall be submitted for all equipment.

1. Include instructions for lubrication, filter replacement, motor replacement, spare parts lists and wiring diagrams.

2. In addition to a full set of manuals with closeout documentation, each unit shall ship with its own manual in a watertight enclosure.

1.04 DELIVERY, STORAGE AND HANDLING

A. Deliver, store, protect and handle products to the Project Site under the provisions of Division 1.

B. Store in clean dry place and protect from weather and construction traffic. Handle carefully to avoid damage to components, enclosures and finish.

C. Protect openings in casing and seal them with plastic wrap to keep dirt and debris. Protect coils from entry of dirt and debris with pipe caps or plugs.

1.05 EXTRA MATERIALS

A. Provide one additional set of filters for each unit, packaged for storage. Tag products to identify associated unit.

1.06 SCHEDULES ON DRAWINGS

A. In general, all capacities of equipment and motor and starter characteristics are shown in schedules on the Drawings. Reference shall be made to the schedules for such information. The capacities shown are minimum capacities. Variations in capacities of the scheduled equipment supplied under this Contract will be permitted only with the written direction of the Engineer.

B. Motors sizes shown on the schedules are the minimum. If a larger motor horsepower is required, it shall be so quoted and noted.

1.07 INDUSTRY STANDARDS

A. All equipment, materials and installations shall conform to the requirements of the most recent edition with latest revisions, supplements and amendments of the following, as applicable:

1. Air Conditioning and Refrigeration Institute (ARI)

2. Air Moving and Conditioning Association (AMCA)

3. American Society of Heating, Refrigerating and Air Conditioning Engineers, Inc. (ASHRAE)

4. National Electric Code (NEC)

5. NFPA 90A Air Conditioning and Ventilation Systems 2009 edition

6. State and local codes, ordinances and statutes

7. Underwriters Laboratories (UL)

8. Others as designated in the specifications.

1.08 QUALITY ASSURANCE

A. Manufacturer Qualifications: Company specializing in manufacturing the products specified in this Section with minimum five (5) years documented experience, who issues complete catalog data on total product.

B. All material and equipment shall be the latest design, new, not deteriorated, and the first quality standard product of manufacturers regularly engaged in the production of such material and equipment.

C. When two or more units of the same class of material or equipment are required, they shall be products of a single manufacturer.

D. All work shall be performed in a neat and workmanlike manner by workers skilled in their respective trades, and all materials and equipment shall be installed as recommended by the manufacturers and in accordance with specified codes and standards.

E. Touch up and/or repaint to match original factory finishes or specially applied corrosion resistant coatings for all finished or painted equipment and materials which are scratched or marred during shipment or installation.

PART 2 - PRODUCTS

2.01 AIR CONDITIONING UNITS

A. Provide air conditioning unit(s) manufactured by one of the following:

1. Daikin North America, LLC (Basis of Design).
2. LG Electronics.
3. Mitsubishi Electric
4. Or Approved Equal.

B. Air conditioning units shall be complete package with air handler matched with air cooled condensing unit. Controls shall be factory mounted and wired.

C. Air Cooled Condensing Unit:

1. General: Units shall include hermetic scroll compressors, plate fin condenser coils, fans and motors, controls and holding charge of nitrogen. Operating range shall be between 115° F and 0° F in cooling.
2. Casing: Unit casing shall be constructed of zinc coated galvanized steel. Casing surfaces shall be finished with factory applied baked enamel finish. Units shall have removable panels which allow access to all major components and controls.
3. Refrigerant System: The air handling unit shall have a single refrigeration circuit. All refrigerant circuits shall be controlled by a factory-installed thermal expansion valve.
4. Compressors: Crankcase heater, internal temperature and current-sensitive motor overloads shall be included for maximum protection. Scroll compressor shall provide inherently low vibration and noise by having no suction and discharge valves. External high and low pressure cutout devices shall be provided. Evaporator-defrost control provided in indoor blower coil shall prevent compressor operation when low evaporator coil temperatures are encountered.

5. Condenser Coil: Coils shall be internally enhanced 3/8 inch copper tubes mechanically bonded to configured aluminum plate fins. Coils shall be factory pressure and leak tested. Provide condenser coil guard grille.

6. Condenser Fan and Motor(s): Direct-drive, statically and dynamically balanced propeller fan(s) shall be used in draw-through vertical discharge position. Fans shall be aluminum construction. Either permanently lubricated totally enclosed or open construction motors shall be provided and shall have built in current and thermal overload protection. Motor(s) shall be either ball or sleeve bearing type.

7. Controls: Condensing units shall be completely factory wired with necessary controls and contactor pressure lugs or terminal block for power wiring. Units shall have single point power entry. Low Ambient Operation: Head pressure control shall be provided to permit operation to 0° F outdoor ambient temperature.

D. Blower coil air handling unit:

1. Blower coil units shall be completely factory assembled including coil, condensate drain pan, fan motor, filters and controls in an insulated casing that can be applied in either vertical or horizontal configuration. Units shall be rated and tested in accordance with ARI Standard 210/240, 340/360. Units shall be UL listed and labeled.

2. Casing: Unit shall be constructed of sheet metal and steel frame with removable front or side panels. Removal of panels must not affect the structural integrity of unit. All exterior wall panels shall be made of minimum 20-gauge baked enamel finished steel. Casing shall be insulated with knockouts provided for electrical power, control wiring and piping connections.

3. Evaporator Coil: Configured aluminum fin surface shall be mechanically bonded to 3/8-inch OD copper tubing. Coils shall be factory pressure and leak tested.

4. Evaporator Fan: Forward curved (FC), centrifugal-type fan(s) with multi-speed direct drive. All fans statically and dynamically balanced and tested after being installed on properly sized hollow or solid shafts. Fan shafts shall not pass through their first critical speed as unit comes up to rated rpm. Thermal overload protection shall be provided for the motor. Fan and motor bearings shall be permanently lubricated. Oversized motors shall be available as an option for high static application. All motors shall meet the US Energy Policy Act of 1992 (EPACT).

5. Controls: Magnetic evaporator fan contactor, low voltage terminal strip, check valve(s), single point power entry and plug in module for accessory electric heat control shall be included. All necessary controls shall be factory installed and wired. Evaporator defrost control shall be included to prevent compressor slugging by temporarily interrupting compressor operation when low evaporator coil temperatures are encountered. A space zone sensor shall be provided by unit manufacturer.

6. Filters: Filters shall be accessible from either side coil access panel. Filter rack shall have low velocity, throw-away filters.

2.02 REFRIGERANT PIPING

A. Products and Manufacturers:

1. Refrigerant piping specialties:

   a. Sporlan.

2. Expansion valves:

   a. Sporlan.

   b. Alcoa.

3. Silver solder - "Easy-Flow 45":

   a. Harman.

4. Moisture indicator - "SEE-ALL":

   a. Sporlan.

B. Refrigerant Piping:

1. Copper tubing conforming to ASTM B280 and/or FS WW-T-799, dehydrated for refrigerant use, with high-temperature soldered joints and wrought copper (400 psig) fittings.

   a. For underground use: Type K.

   b. For aboveground use: Type L.

C. Piping Joints:

1. Joints between copper tubing and fittings to be high temperature brazed joint (melting point not less than 1000° F, Harris Products Stay-Silv 15. Do not use flux. Purge the line with nitrogen to prevent scale build up.

2. Joints between copper and brass, steel, etc., shall be silver soldered only, Harris Products Safety-Silv 45 with Stay-Silv White Brazing Flux.

D. Pre-charged Line Sets: Size per manufacturer's recommendations.

E. Field Assembled Units:

1. Size refrigeration lines according to manufacturer's published tables using pressure or temperature drops as follows:

   a. Suction lines: 2 DegF.

   b. Liquid lines: 1 DegF or 2 psi.

   c. Hot gas lines: 1 DegF or 3.6 psi.

   d. Size discharge and hot gas risers for positive oil return to compressors.

F. Refrigerant Dryer:

1. Sporlan material "CATCH-ALL" filter-drier with aluminum molded core.
2. In each liquid line.
3. A three-valve bypass around filter-drier.
4. Install so core can be removed without cutting or breaking any refrigerant line.

G. Moisture Indicator:

1. Show presence of moisture in system by change of color.
2. Install full size in the main liquid line adjacent to the filter-drier.
3. Use Sporlan "SEE-ALL."

H. Strainers:

1. Design to permit removing screen without removing strainer from piping system.
2. Screens not larger than 80 mesh.
3. Strainers on liquid line serving each thermostatic expansion valve and in suction line serving each refrigerant compressor not equipped with integral strainer.

I. Oil Traps: Provide in lines as required.

J. All Valves:

1. All bronze.
2. 2 IN and less: Solder ends.
3. 3 IN and over: Four (4) bolt union ends.

K. Shut-Off Valves:

1. Packed type with gas-tight cap seal and hard metal seats and shoulders which permit packing stuffing boxes wide open under pressure; or sealed diaphragm type.
2. Wheel, globe, angle or "T" handle.

L. Check Valves:

1. In liquid lines 5/8 IN and less: Lift check type.
2. In lines 3/4 to 2 IN: Swing check type.
3. In lines 3 IN and over: Wafer type swing check with bronze disc.

M. Expansion Valves:

1. Sized by manufacturer for refrigerant used.

2. Provide one (1) in each circuit with liquid distributor connection immediately after.

N. Vent and Test Valves: Angle cap type with seal and outlet caps.

O. Pre-charged Line Sets: Install per manufacturer's recommendations.

P. Field Assembled Lines:

1. Refrigerant piping:

a. Purge refrigerant piping of all air while connections of refrigerant piping are being made.

1) Shut-off valves.

2) Connect tank of dry nitrogen to line on back side of valve.

3) Introduce dry nitrogen into line as refrigerant piping joints are successively made up from valve to each condenser.

2. Testing:

a. Refrigerant piping systems: Follow general testing guidelines of ASHRAE 15, except as modified herein.

b. Pressurize the high and low pressure sides of the piping system after completion of the refrigerant piping.

c. Pressurize at the test pressures specified in ASHRAE 15 for the refrigerant type to be used in the system.

d. Repair any leaks and repeat tests until no further leaks are found and the system passes a static leak test at test pressure for a duration of 24 HRS.

3. Cleaning:

a. Disconnect suction and discharge lines from compressor for clean up after complete system is tested.

b. Valve or blank off system into three (3) separate systems for purpose of cleanup.

1) Suction side including cooling coils.

2) Discharge side including air cooled condenser.

c. Thoroughly clean each system using pumped refrigerant until system is proven clean to satisfaction of refrigeration compressor serviceman.

d. Notify Engineer for a visual inspection of both cleaning process and completely cleaned system.

4. Evacuation and Drying:

a. After tests and cleaning have been completed and system proved tight, charge each circuit with dry clean refrigerant to gas pressure as recommended by the equipment manufacturer.

b. Evacuate to 100 micron Hg and hold for 72 HRS.

1) Use laboratory type vacuum pump capable of holding absolute pressure of 50 micron Hg.

2) Check the vacuum with a suitable mercury column gage.

c. Admit another drying charge of refrigerant and allow 4 to 6 HRS to absorb moisture and install dryer cores.

d. Use second evacuation to remove all refrigerant and moisture.

e. After second evacuation, charge system with refrigerant.

f. Charge the system with refrigerant as required after final evacuation.

2.03 CONDENSATE DRAIN PIPE

A. Poly (Vinyl Chloride) Pipe and Fittings:

1. Pipe: Drain, waste and sanitary pipes and fittings shall be DWV Schedule 40 PVC, ASTM D2665.

2. Joints: Chemical weld with manufacturers recommended solvent.

PART 3 - EXECUTION

3.01 INSTALLATION

A. All installation shall be in accordance with manufacturer’s published recommendations.

B. Do not operate units for any purpose, temporary or permanent, until ductwork is clean, filters are in place, bearings have been lubricated, and fan has been test run under observation of the Owner's representative(s).

C. Provide the minimum access space for maintenance of filters and coils as scheduled or shown on the Drawings. Arrange these components in a manner that allows for ease of replacement.

3.02 CLEANING

A. Clean dirt and marks and other debris from exterior of equipment.

B. Remove debris and waste material resulting from installation.

3.03 GUARANTEE

A. All components, parts, and assemblies shall be guaranteed against defects in materials and workmanship for a period of one (1) year. The period of such warranties shall start on the date the particular equipment is placed in use by the Owner with corresponding

start-up certification provided by the manufacturer's technical representative as specified herein, provided that the equipment demonstrates satisfactory performance during the thirty day operational period after the equipment startup. If the equipment does not perform satisfactorily during the thirty day operational period, the start of the warranty period will be delayed until the equipment demonstrates proper operation. The Equipment Supplier shall repair or replace without charge to the Owner any part of equipment which is defective or showing undue wear within the guarantee period, or replace the equipment with new equipment if the mechanical performance is unsatisfactory; furnishing all parts, materials, labor, etc., necessary to return the equipment to its specified performance level.

-END OF SECTION-

SECTION 15995 - PIPELINE TESTING AND DISINFECTION

PART 1 -- GENERAL

1.01 THE REQUIREMENT

A. The CONTRACTOR shall perform flushing and testing of all pipelines and appurtenant piping, complete, including conveyance of test water from OWNER designated source to point of use and all disposal thereof, all in accordance with the requirements of the Contract Documents.

1.02 REFERENCE SPECIFICATIONS, CODES, AND STANDARDS

A. Commercial Standards

1. ANSI/AWWA B300 Hypochlorites
2. ANSI/AWWA B301 Liquid Chlorine
3. ANSI/AWWA C600 Installation of Ductile Iron Water Mains and their Appurtenances
4. ANSI/AWWA C651 Disinfecting Water Mains

1.03 SUBMITTALS

A. The CONTRACTOR shall submit disinfection test reports and hydrostatic test reports in accordance with the Section titled “Submittals”.

PART 2 -- PRODUCTS

2.01 MATERIALS REQUIREMENTS

A. All test equipment, temporary piping, temporary valves or bulkheads, or other water control equipment and materials shall be determined and furnished by the CONTRACTOR subject to the ENGINEER's review. No materials shall be used which would be injurious to the the construction or its future function.

PART 3 -- EXECUTION

3.01 GENERAL

A. Notify the ENGINEER and OWNER 48 hours in advance to obtain OWNER’s approval to commence testing and/or disinfection of any particular structure and/or pipeline.

B. Unless otherwise provided herein, water for testing pipelines will be from an OWNER furnished source; however, the CONTRACTOR shall make all necessary provisions for

conveying the water from the OWNER-designated source to the points of use and for the cost of such water as discussed in Division 1 of these specifications.

C. All pressure and gravity pipelines shall be tested. All testing operations shall be performed in the presence of the ENGINEER.

3.02 TESTING OF PIPELINES

A. All equipment, including, but not limited to, pumps, gauges, and special fittings required to perform the testing shall be provided by the Contractor. The Contractor shall perform all excavation and other work required to locate and repair leaks and correct other defects which may be disclosed or develop under tests. The Contractor shall replace all coating, painting, backfill, or other permanent work removed in locating or repairing leaks and correcting defective piping. All gauges and control devices connected to lines being tested must be disconnected for the duration of the test. Water shall not be used in testing air lines, chlorine gas lines, or other gas carrying pipes. All tests shall be witnessed by the Engineer.

B. Prior to hydrostatic testing, all pipelines shall be flushed or blown out as appropriate. The CONTRACTOR shall test all pipelines either in sections or as a unit. No section of the pipeline shall be tested until all field-placed concrete or mortar have attained an age of fourteen days. The test shall be made by closing valves when available, or by placing temporary bulkheads in the pipe and filling the line slowly with water. The CONTRACTOR shall be responsible for ascertaining that all test bulkheads are suitably restrained to resist the thrust of the test pressure without damage to, or movement of, the adjacent pipe. Care shall be taken to see that all air vents are open during filling.

C. The pipeline shall be filled at a rate which will not cause any surges or exceed the rate at which the air can be released through the air valves at a reasonable velocity and all the air within the pipeline shall be properly purged. After the pipeline or section thereof has been filled, it shall be allowed to stand under a slight pressure for at least twenty-four hours to allow the concrete or mortar lining, as applicable, to absorb water it will -and to allow the escape of air from any air pockets. During this period, bulkheads, valves, and connections shall be examined for leaks. If leaks are found, corrective measures satisfactory to the ENGINEER shall be taken.

D. The hydrostatic test shall consist of holding the test pressure on the pipeline for a period of four hours. The test pressure for pipelines shall be 150 psi. Test pressure shall be measured at the lowest point of the pipeline section being tested. All visible leaks shall be repaired in a manner acceptable to the ENGINEER. No visible leaks will be allowed.

E. Gravity sewer pipe or other pipe having free surface flow shall be given a water exfiltration test as specified herein. The Contractor has the option of using a low pressure air test in lieu of the water exfiltration test. If excessive groundwater is present which precludes use of the exfiltration test, the Contractor shall use either the low pressure air test or infiltration test.

F. Leakage Tests: Leakage tests shall be conducted concurrently with the pressure test. The allowable leakage shall be determined in accordance with AWWA C600. The duration of the test shall be not less than two hours. Measurement shall be made by

means of a calibrated suction tank showing the amount of water required by the test pump to accurately maintain the specified test pressure. Tests shall be performed only in the presence of the Engineer, or, if scheduling of tests is such that the Engineer cannot attend due to conflicting commitment, tests may be performed without the Engineer's presence if the Contractor obtains written permission to do so from the Engineer prior to initiation of testing. No test report will be accepted unless proof of compliance with the foregoing requirement accompanies the test report.

G. In the case of pipelines that fail to pass the prescribed leakage test, the Contractor shall determine the cause of the leakage, shall take corrective measures necessary to repair the leaks, and shall repeat the test until the testing requirements are met.

3.03 FLUSHING

A. All piping shall be flushed clean of all dirt and foreign material following completion of the hydrostatic and leakage test. Air and gas piping shall be purged with air or nitrogen gas as directed by the Engineer.

B. Equipment and Supplies. The Contractor shall provide all equipment, and supplies for performing the work, and shall waste the water at locations or by procedures approved by the Engineer.

3.04 DISINFECTION

A. Disinfection of potable water lines shall be performed in accordance with AWWA Standard C-651, State of Florida and local applicable regulations. The Contractor shall be responsible for furnishing fittings and all special pipe taps required by the pipe disinfection work.

B. Inject the required amount of disinfectant to yield a minimum chlorine content of 50 ppm into piping system.

C. Allow solution to remain in the pipes for twenty-four hours or longer, if required, to destroy all harmful bacteria.

D. Operate all valves and other appurtenances during disinfection to assure the sterilizing mixture is dispersed into all parts of the system.

E. After the solution has been retained for the required time, pipes shall be flushed and filled with municipal domestic water. Sterilizing water shall be disposed of in an approved manner. Sterilizing water shall not be allowed to flow into a waterway without reducing chlorine concentrations to a safe level. The CONTRACTOR shall be responsible for meeting all applicable requirements and acquiring all necessary permits for this work.

F. Take one bacteriological sample and test from every segment of pipeline tested. Samples shall be taken and tested on each of two successive days. CONTRACTOR shall submit sample to a laboratory, approved by ENGINEER, for testing. The disinfection process shall be repeated if laboratory test results reflects presence of harmful bacteria in the water.

3.05 TESTS

A. Regulatory Requirements:

1. Conform to Chapter 62-555 of the Florida Administrative Code.

2. Conform to FDEP Standard Operating Procedures for Field Activities (DEP-SOP-001/01).

B. Testing for Chlorine prior to Flushing: Prior to flushing the chlorinated water from the pipeline coordinate with the CONTRACTOR's laboratory to take samples and test for chlorine residual. After 48 hours, if chlorine solution contains at least 25 parts per million of chlorine, the line may then be flushed. If less than 25 parts per million of chlorine is found then the pipeline must be re-disinfected.

D. Testing for Chlorine and Bacteria after Flushing: After flushing the chlorinated water from the pipeline (to less than the maximum allowable per Chapter 62-555 Florida Administrative Code) coordinate with CONTRACTOR's laboratory to take samples and test for the following in accordance with Florida Department of Health in Broward County requirements:

1. Regulatory Requirements: Chapter 62-555 of the Florida Administrative Code.

2. Total Chlorine Residual (maximum allowable: 4 mg/L)

3. Total Coliform Bacteria (#/100 mL)

4. Sample Points: Minimum of two sample points every 500 feet of pipe segment (or as indicated on the Drawings).

5. Number of Samples: Minimum of two samples from each sample point.

6. Minimum period between samples: 24 hours.

E. Florida Department of Health in Broward County Clearance: New piping cannot be placed into service until clearance is received from the Florida Department of Health in Broward County.

F. Project Record Documents

1. Submit reports under provisions of Section 01300.

2. Bacteriological report; accurately record:

a. Date issued, project name, and testing laboratory name, address, and telephone number.

b. Time and date of water sample collection.

c. Name of person collection sample.

d. Sample locations.

e. Initial and twenty-four hour total chlorine residuals in mg/L for each outlet tested.

f. Initial and twenty-four hour Total Coliform bacteria test results for each outlet tested.

g. Certification that water conforms, or fails to conform to bacterial standards of State of Florida.

h. Bacteriologist's signature.

3.06 CONNECTIONS TO EXISTING SYSTEM

A. Where connections are to be made to an existing potable water system, the interior surfaces of all pipe and fittings used in making the connections shall be swabbed or sprayed with a five percent sodium hypochlorite solution before they are installed. Thorough flushing shall be started as soon as the connection is completed and shall be continued until discolored water is eliminated.

B. Prior to actual connections to the existing potable water system, record drawings, hydrostatic pressure test results, and bacterial test results shall be submitted to the Engineer. Upon approval from the Florida Department of Health in Broward County, the connection can be constructed.

C. Connections to the existing system shall be performed in the presence of the OWNER.

- END OF SECTION -

SECTION 16000 - BASIC ELECTRICAL REQUIREMENTS

PART 1 -- GENERAL

1.01 THE REQUIREMENT

A. The Contractor shall furnish all labor, materials, tools, and equipment, and perform all work and services necessary for, or incidental, to the furnishing and installation of all electrical work as shown on the Drawings, and as specified in accordance with the provisions of the Contract Documents and completely coordinate with the work of other trades involved in the general construction. Although such work is not specifically shown or specified, all supplementary or miscellaneous items, appurtenances, and devices incidental to or necessary for a sound, secure, and complete installation shall be furnished and installed as part of this work. The Contractor shall obtain approved Shop Drawings showing wiring diagrams, connection diagrams, roughing-in and hook up details for all equipment and comply therewith. All electrical work shall be complete and left in operating condition in accordance with the intent of the Drawings and the Specifications for the electrical work.

B. Reference Section 17000, Control and Information System Scope and General Requirements for scope of work details as they relate to the Division 17 Subcontractor.

C. The electrical scope of work for this project primarily includes, but is not limited to, the following:

1. Furnish and install new “B side” of the plant’s service entrance low voltage switchgear, including connections from FPL transformer.

2. Furnish and install temporary electrical distribution equipment and connections for temporary high service pumps (including equipment, ductbank, raceways, conductors, etc.).

3. Furnish and install low voltage power distribution equipment including switchboards, panelboards, dry type transformers, and other low voltage electrical power distribution equipment.

4. Furnish and install low voltage motor control equipment including variable frequency drives.

5. Furnish and install all aboveground raceway systems including conduit, fittings, boxes, supports, and other pertinent components.

6. Furnish and install all underground raceway systems including conduit, fittings, manholes, handholes and other pertinent components.

7. Furnish and install all low voltage wire and cable resulting in a complete and operable electrical system.

8. Furnish and install new lighting systems and wiring devices.

9. Other electrical work as specified herein and indicated on the Drawings.

D. All material and equipment must be the product of an established, reputable, and approved manufacturer; must be new and of first class construction; must be designed and guaranteed to perform the service required; and must bear the label of approval of the Underwriters Laboratories, Inc., where such approval is available for the product of the listed manufacturer as approved by the Engineer.

E. When a specified or indicated item has been superseded or is no longer available, the manufacturer's latest equivalent type or model of material or equipment as approved by the Engineer shall be furnished and installed at no additional cost to the Owner.

F. Where the Contractor's selection of equipment of specified manufacturers or additionally approved manufacturers requires changes or additions to the system design, the Contractor shall be responsible in all respects for the modifications to all system designs, subject to approval of the Engineer. The Contractor's bid shall include all costs for all work of the Contract for all trades made necessary by such changes, additions or modifications or resulting from any approved substitution.

G. Furnish and install all stands, racks, brackets, supports, and similar equipment required to properly serve the equipment which is furnished under this Contract, or equipment otherwise specified or indicated on the Drawings.

1.02 EQUIPMENT LOCATION

A. The Drawings show the general location of feeders, transformers, outlets, conduits, and circuit arrangements. Because of the small scale of the Drawings, it is not possible to indicate all of the details involved. The Contractor shall carefully investigate the structural and finish conditions affecting all of his work and shall arrange such work accordingly; furnishing such fittings, junction boxes, and accessories as may be required to meet such conditions. The Contractor shall refer to the entire Drawing set to verify openings, special surfaces, and location of other equipment, or other special equipment prior to roughing-in for panels, switches, and other outlets. The Contractor shall verify all equipment dimensions to ensure that proposed equipment will fit properly in spaces indicated.

B. Where outlets are shown near identified equipment furnished by this or other Contractors, it is the intent of the Specifications and Drawings that the outlet be located at the equipment to be served. The Contractor shall coordinate the location of these outlets to be near the final location of the equipment served whether placed correctly or incorrectly on the Drawings.

1.03 LOCAL CONDITIONS

A. The Contractor shall examine the site and become familiar with conditions affecting the work. The Contractor shall investigate, determine, and verify locations of any overhead or buried utilities on or near the site, and shall determine such locations in conjunction with all public and/or private utility companies and with all authorities having jurisdiction. All costs, both temporary and permanent to connect all utilities, shall be included in the Bid. The Contractor shall be responsible for scheduling and coordinating with the local utility for temporary and permanent services.

B. In addition, the Contractor shall relocate all duct banks, lighting fixtures, receptacles, switches, boxes, and other electrical equipment as necessary to facilitate the Work included in this project. Costs for such work shall be included in the Bid.

C. The Contractor is responsible for coordinating all electric utility equipment installations with the serving electric utility. The Contractor shall furnish and install all electric utility equipment required by the electric utility to be installed by the Contractor whether specifically shown on the Drawings or not.

D. The Contractor shall furnish and install the following electrical utility equipment as a minimum:

   1. Primary and or secondary ductbank and manholes.

   2. Metering equipment cabinets and/or bases.

   3. Conduit and wire required from metering cabinet to metering current transformers and potential transformers.

   4. Secondary conductors.

   5. Secondary terminations.

E. The electric utility will furnish and install the following equipment:

   1. Primary conductors and terminations.

   2. Transformer as required.

F. The Contractor is responsible for ensuring all electric utility equipment and construction installed by the Contractor is furnished and installed in accordance with the electric utility's design specifications and requirements. The Contractor is fully responsible for coordinating his scope of work with the electric utility. Any additional required electric utility construction or equipment not specified herein or shown on the Drawings shall be supplied by the Contractor at no additional cost to the Owner.

G. The contact person at the serving electrical utility is:

Lenin Vargas
Engineer II, Gulfstream Service Center
Florida Power & Light
4000 Davie Road Extension
Hollywood, FL, 33024
954.442.6362
Lenin.Vargas@fpl.com

1.04 SUBMITTALS

A. In accordance with the procedures and requirements set forth in the General Conditions, Section 01300, Submittals and the requirements of the individual specification sections, the Contractor shall obtain from the equipment manufacturer and submit the following:

1. Shop Drawings

2. Operation and Maintenance Manuals

3. Spare Parts List

4. Proposed Testing Methods and Reports of Certified Shop Tests.

5. Reports of Certified Field Tests.

6. Manufacturer's Representative's Certification.

B. Submittals shall be sufficiently complete in detail to enable the Engineer to determine compliance with Contract requirements.

C. Submittals will be approved only to the extent of the information shown. Approval of an item of equipment shall not be construed to mean approval for components of that item for which the Contractor has provided no information.

D. Some individual Division 16 specification sections may require a Compliance, Deviations, and Exceptions (CD&E) letter to be submitted. If the CD&E letter is required and shop drawings are submitted without the letter, the submittal will be rejected. The letter shall include all comments, deviations and exceptions taken to the Drawings and Specifications by the Contractor AND Equipment Manufacturer/Supplier. This letter shall include a copy of this specification section. In the left margin beside each and every paragraph/item, a letter "C", "D", or "E" shall be typed or written in. The letter "C" shall be for full compliance with the requirement. The letter "D" shall be for a deviation from the requirement. The letter "E" shall be for taking exception to a requirement. Any requirements with the letter "D" or "E" beside them shall be provided with a full typewritten explanation of the deviation/exception. Handwritten explanation of the deviations/exceptions is not acceptable. The CD&E letter shall also address deviations, and exceptions taken to each Drawing related to this Specification Section.

1.05 APPLICABLE CODES AND REQUIREMENTS

A. Conformance

1. All work, equipment and materials furnished shall conform with the existing rules, requirements and specifications of the following:

   a. Insurance Rating Organization having jurisdiction

   b. The serving electrical utility company

   c. The currently adopted edition of the National Electrical Code (NEC)

   d. The National Electric Manufacturers Association (NEMA)

   e. The Institute of Electrical and Electronic Engineers (IEEE)

   f. The Insulated Cable Engineers Association (ICEA)

   g. The American Society of Testing Materials (ASTM)

   h. The American National Standards Institute (ANSI)

   i. The requirements of the Occupational Safety Hazards Act (OSHA)

   j. The National Electrical Contractors Association (NECA) Standard of Installation

   k. National Fire Protection Association (NFPA)

   l. International Electrical Testing Association (NETA)

   m. All other applicable Federal, State and local laws and/or ordinances.

2. All material and equipment shall bear the inspection labels of Underwriters Laboratories, Inc., if the material and equipment is of the class inspected by said laboratories.

B. Nonconformance

1. Any paragraph of requirements in these Specifications, or Drawings, deviating from the rules, requirements and Specifications of the above organizations shall be invalid and their (the above organizations) requirements shall hold precedent thereto. The Contractor shall be held responsible for adherence to all rules, requirements and specifications as set forth above. Any additional work or material necessary for adherence will not be allowed as an extra, but shall be included in the Bid. Ignorance of any rule, requirement, or Specification shall not be allowed as an excuse for nonconformity. Acceptance by the Engineer does not relieve the Contractor from the expense involved for the correction of any errors which may exist in the drawings submitted or in the satisfactory operation of any equipment.

C. Certification

1. Upon completion of the work, the Contractor shall obtain certificate(s) of inspection and approval from the National Board of Fire Underwriters or similar inspection organization having jurisdiction and shall deliver same to the Engineer and the Owner.

1.06 PERMITS AND INSPECTIONS

A. The Contractor shall reference the General Conditions and Section 01010, Summary of Work.

1.07 TEMPORARY LIGHTING AND POWER

A. The Contractor shall reference the General Conditions and Section 01510, Temporary Utilities.

1.08 TESTS

A. Upon completion of the installation, the Contractor shall perform tests for operation, load (Phase) balance, overloads, and short circuits. Tests shall be made with and to the satisfaction of the Owner and Engineer.

B. The Contractor shall perform all field tests and shall provide all labor, equipment, and incidentals required for testing and shall pay for electric power required for the tests. All defective material and workmanship disclosed shall be corrected by the Contractor at no cost to the Owner. The Contractor shall show by demonstration in service that all circuits and devices are in good operating condition. Test shall be such that each item of control equipment will function not less than five (5) times.

C. Refer to each individual specification section for detailed test requirements.

D. The Contractor shall complete the installation and field testing of the electrical installation at least two (2) weeks prior to the start-up and testing of all other equipment. During the period between the completion of electrical installation and the start-up and testing of all other equipment, the Contractor shall make all components of the Work available as it is completed for their use in performing Preliminary and Final Field Tests.

E. Before each test commences, the Contractor shall submit a detailed test procedure, and also provide test engineer resume, manpower and scheduling information for the approval by the Engineer. In addition, the Contractor shall furnish detailed test procedures for any of his equipment required as part of the field tests of other systems.

1.09 INFRARED INSPECTION

A. Just prior to the final acceptance of a piece of equipment, the Contractor shall perform an infrared inspection to locate and correct all heating problems associated with electrical equipment terminations.

B. The infrared inspection shall apply to all new equipment and existing equipment that is in any way modified under this Contract. All heating problems detected with new equipment furnished and installed under the Scope of this Contract shall be corrected by the Contractor. All problems detected with portions of existing equipment modified under this Contract shall also be corrected by the Contractor.

C. Any issues detected with portions of existing equipment that were not modified under this Contract are not the responsibility of the Contractor. Despite the Contractor not being held responsible for these problems, the Contractor shall report them to the Owner and Engineer immediately for resolution.

D. The infrared inspection report shall include both digital and IR pictures positioned side by side. Both the digital and IR pictures shall be clear and high quality. Fuzzy, grainy, or poorly illuminated pictures are not acceptable. The IR picture shall be provided with a temperature scale beside it, and an indication of the hot spot temperature in each picture. Reports shall be furnished in a 3-ring binder, with all pages printed in full color, with equipment assemblies separated by tabs.

1.10 PROTECTIVE DEVICE SETTING AND TESTING

A. The Contractor shall provide the services of a field services organization to adjust, set, calibrate and test all protective devices in the electrical system. The organization shall be a subsidiary of or have a franchise service agreement with the electrical equipment manufacturer. The qualifications of the organization and resumes of the technicians as well as all data forms to be used for the field testing shall be submitted.

B. All protective devices in the electrical equipment shall be set, adjusted, calibrated and tested in accordance with the manufacturers' recommendations, the coordination study, and best industry practice.

C. Proper operation of all equipment associated with the device under test and its compartment shall be verified, as well as complete resistance, continuity and polarity tests of power, protective and metering circuits. Any minor adjustments, repairs and/or lubrication necessary to achieve proper operation shall be considered part of this Contract.

D. All solid state trip devices shall be checked and tested for setting and operation using manufacturers recommended test devices and procedures.

E. Circuit breakers and/or contactors associated with the above devices shall be tested for trip and close functions with their protective device.

F. When completed, the Contractor shall provide a comprehensive report for all equipment tested indicating condition, readings, faults and/or deficiencies in same. Inoperative or defective equipment shall be brought immediately to the attention of the Engineer.

G. Prior to placing any equipment in service, correct operation of all protective devices associated with this equipment shall be demonstrated by field testing under simulated load conditions.

1.11 POWER SYSTEM STUDIES

A. The Contractor shall provide power systems studies performed by a registered professional engineer in accordance with Section 16055 – Power System Studies.

1.12 SCHEDULES AND FACILITY OPERATIONS

A. Since the equipment testing required herein shall require that certain pieces of equipment be taken out of service, all testing procedures and schedules must be submitted to the Engineer for review and approval one (1) month prior to any work beginning. When testing has been scheduled, the Engineer must be notified 48 hours prior to any work to allow time for load switching and/or alternation of equipment. In addition, all testing that requires temporary shutdown of facility equipment must be coordinated with the Owner/Engineer so as not to affect proper facility operations.

B. At the end of the workday, all equipment shall be back in place and ready for immediate use should a facility emergency arise. In addition, should an emergency condition occur during testing, at the request of the Owner, the equipment shall be placed back in service immediately and turned over to Owner personnel.

C. In the event of accidental shutdown of Owner equipment, the Contractor shall notify Owner personnel immediately to allow for an orderly restart of affected equipment.

D. Maintaining the operation of these facilities during the duration of the construction period is essential and required. The Contractor shall furnish and install temporary equipment as required to maintain facility operation. Reference Section 01520 of the Specifications for construction sequencing and specific operational constraint information.

1.13 MATERIALS HANDLING

A. Materials arriving on the job site shall be stored in such a manner as to keep material free of rust and dirt and so as to keep material properly aligned and true to shape. Rusty, dirty, or misaligned material will be rejected. Electrical conduit shall be stored to provide protection from the weather and accidental damage. Rigid non-metallic conduit shall be stored on even supports and in locations not subject to direct sun rays or excessive heat. Cables shall be sealed, stored, and handled carefully to avoid damage to the outer covering or insulation and damage from moisture and weather. Adequate protection shall be required at all times for electrical equipment and accessories until installed and accepted. Materials damaged during shipment, storage, installation, or testing shall be replaced or repaired in a manner meeting with the approval of the Engineer. If space heaters are provided in a piece of electrical equipment, they shall be temporarily connected to a power source during storage. The Contractor shall store equipment and materials in accordance with Section 01550, Site Access and Storage.

1.14 WARRANTIES

A. Unless otherwise specified in an individual specification section, all equipment and electrical construction materials furnished and installed under Division 16 shall be provided with a warranty in accordance with the requirements of Section 11000, Equipment General Provisions and the General Conditions.

1.15 TRAINING

A. Unless otherwise specified in an individual specification section, all training for equipment furnished and installed under Division 16 shall be provided in accordance with the requirements of Section 11000, Equipment General Provisions.

PART 2 -- PRODUCTS

2.01 PRODUCT REQUIREMENTS

A. Unless otherwise indicated, the materials to be provided under this Specification shall be the products of manufacturers regularly engaged in the production of all such items and shall be the manufacturer's latest design. The products shall conform to the applicable standards of UL and NEMA, unless specified otherwise. International Electrotechnical Commission (IEC) standards are not recognized. Equipment designed, manufactured, and labeled in compliance with IEC standards is not acceptable.

B. All items of the same type or ratings shall be identical. This shall be further understood to include products with the accessories indicated.

C. All equipment and materials shall be new, unless indicated or specified otherwise.

D. The Contractor shall submit proof if requested by the Engineer that the materials, appliances, equipment, or devices that are provided under this Contract meet the requirements of Underwriters Laboratories, Inc., in regard to fire and casualty hazards. The label of or listing by the Underwriters Laboratories, Inc., will be accepted as conforming to this requirement.

2.02 SUBSTITUTIONS

A. Unless specifically noted otherwise, any reference in the Specifications or on the Drawings to any article, service, product, material, fixture, or item of equipment by name, make, or catalog number shall be interpreted as establishing the type, function, and standard of quality and shall not be construed as limiting competition. The Contractor, in such cases may, at his option use any article, device, product, material, fixture, or item of equipment which in the judgment of the Engineer, expressed in writing, is equal to that specified.

2.03 CONCRETE

A. The Contractor shall furnish all concrete required for the installation of all electrical work, Concrete shall be Class A unless otherwise specified. Concrete and reinforcing steel shall meet the appropriate requirements of Division 3 of the Specifications.

B. The Contractor shall provide concrete equipment pads for all free standing electrical apparatus and equipment located on new or existing floors or slabs. The Contractor shall provide all necessary anchor bolts, channel iron sills, and other materials as required. The exact location and dimensions shall be coordinated for each piece of equipment well in advance of the scheduled placing of these pads. Equipment pads shall be 4 inches high unless otherwise indicated on the Drawings and shall conform to standard detail for equipment pads shown on the Contract Drawings. Equipment pads shall not have more than 3” excess concrete beyond the edges of the equipment.

C. The Contractor shall provide concrete foundations for all free standing electrical apparatus and equipment located outdoors or where floors or slabs do not exist and/or are not or provided by others under this Contract. The Contractor shall provide all necessary anchor bolts, channel iron sills, and other materials as required. The location and dimensions

shall be coordinated for each piece of equipment well in advance of the scheduled placing of the foundations. Equipment foundations shall be constructed as detailed on the Drawings or if not detailed on the Drawings shall be 6 inches thick minimum reinforced with #4 bars at 12-inch centers each way placed mid-depth. Concrete shall extend 6 inches minimum beyond the extreme of the equipment base and be placed on a compacted stone bed (#57 stone or ABC) 6 inches thick minimum.

2.04 RUBBER INSULATING MATTING

A. Rubber insulating matting shall be furnished and installed on the floor and in front of each piece of electrical equipment that is located indoors and installed under this Contract. Rubber insulating matting shall not be installed outdoors. The mat shall be long enough to cover the full length of the equipment. The mat shall be 1/4 inch thick with beveled edges, canvas back, solid type with corrugations running the entire length of the mat. The matting shall meet OSHA requirements and the requirements of ASTM D-178 for Type 2, Class 2 insulating matting. Matting shall be 36 inches wide, minimum. However, matting width shall be no less than the NEC working clearance for the equipment with which it is associated.

B. Matting shall be provided for the following equipment:

- PLC/RTU Enclosures
- Switchgear Assemblies
- Switchboard Assemblies
- Variable Frequency Drives
- Panelboards

PART 3 -- EXECUTION

3.01 CUTTING AND PATCHING

A. Coordination

1. The Work shall be coordinated between all trades to avoid delays and unnecessary cutting, channeling and drilling. Sleeves shall be placed in concrete for passage of conduit wherever possible.

B. Damage

1. The Contractor shall perform all chasing, channeling, drilling and patching necessary to the proper execution of his Contract. Any damage to the building, structure, or any equipment shall be repaired by qualified mechanics of the trades involved at the Contractor's expense. If, in the Engineer's judgment, the repair of damaged equipment would not be satisfactory, then the Contractor shall replace damaged equipment at his own expense.

C. Existing Equipment

1. Provide a suitable cover or plug for openings created in existing equipment as the result of work under this Contract. For example, provide round plugs in equipment enclosures where the removal of a conduit creates a hole and the enclosure. Covers and plugs shall maintain the NEMA rating of the equipment enclosure. Covers and plugs shall be watertight when installed in equipment located outdoors.

3.02 EXCAVATION AND BACKFILLING

A. The Contractor shall perform all excavation and backfill required for the installation of all electrical work. All excavation and backfilling shall be in complete accordance with the applicable requirements of Division 2.

3.03 CORROSION PROTECTION

A. Wherever dissimilar metals, except conduit and conduit fittings, come into contact, the Contractor shall isolate these metals as required with neoprene washers, nine (9) mil polyethylene tape, or gaskets.

- END OF SECTION -

SECTION 16055 – POWER SYSTEM STUDIES

PART 1 -- GENERAL

1.01 THE REQUIREMENT

A. The Contractor shall provide Short Circuit Studies, Equipment Evaluation Studies, Protective Device Coordination Studies, Load Flow Analyses, and Arc Flash Hazard Studies performed by a professional electrical engineer currently registered in the State of Florida.

B. The scope of work for these studies shall include the **entire** Hallandale Water Treatment Plant. All existing and proposed electrical equipment and distribution systems at the facility shall be included in the studies, although not all electrical equipment is shown on the Contract Drawings for this particular project. As-built documentation will be furnished by the Owner after the bid opening to facilitate completion of the studies.

C. Prior to receiving final approval of the distribution equipment shop drawings for the equipment proposed under this Contract and/or prior to release of that equipment for manufacture, the Preliminary Study Report, as specified herein, shall be submitted and approved. Contractor shall expedite the completion of the Preliminary Study Report so that final approval of proposed equipment is not delayed.

1.02 REFERENCE CODES AND STANDARDS

A. Institute of Electrical and Electronic Engineers (IEEE):

1. Standard 141, Recommended Practice for Electrical Power Distribution for Industrial Plants

2. Standard 241, Recommended Practice for Electrical Power Systems in Commercial Buildings

3. Standard 242, Recommended Practice for Protection and Coordination of Industrial and Commercial Systems

4. Standard 399, Recommended Practice for Industrial and Commercial Power System Analysis

5. Standard 519-1992, Recommended Practices and Requirements for Harmonic Control in Electric Power Systems

6. Standard 1584-2002/2004a, IEEE Guide for Performing Arc-Flash Hazard Calculations

B. American National Standards Institute (ANSI):

1. Standard C37.90, IEEE Standard for Relays and Relay Systems Associated with Electric Power Apparatus

2. Standard C37.91, Guide for Protective Relay Applications to Power Transformers

3. Standard C37.95, Guide for Protective Relaying of Utility-Consumer Interconnections.

4. Standard C37.96, Guide for AC Motor Protection

5. Standard C57.12.59, Guide Dry-Type Transformer Through-Fault Current Duration

6. Standard C.57.13, Standard Requirements for Instrumentation Transformers

7. Standard C57.109, Guide for Liquid-Immersed Transformer Through Fault-Current Duration

C. National Electrical Code (NEC)

D. National Fire Protection Agency (NFPA):

1. NFPA 70E, Standard for Electrical Safety in the Workplace (2012 edition)

1.03 SUBMITTALS

A. The Contractor shall submit for review and approval, four (4) paper copies of the Preliminary Power System Studies Report, four (4) paper copies of the Pre-final Power System Studies Report, and six (6) paper copies of the Final Power System Studies Report. One (1) electronic copy of each report shall be also submitted on a CD. The electronic version of each report shall be in the PDF file format. Each section of the report shall be placed in a separate PDF file to allow fast and easy navigation between sections. Additional details regarding the report requirements are specified elsewhere herein.

B. All Reports shall bear the signature and seal of the professional electrical engineer that performed the study.

C. The Contractor shall also submit one (1) electronic copy of the system model and all required database files generated by the software analysis package used. Files shall be placed on a CD and submitted with the Preliminary, Pre-final, and Final Power System Studies Reports.

1.04 QUALIFICATIONS

A. The Power System Studies shall be performed by a professional electrical engineer registered in the State of Florida. The registered professional electrical engineer shall have a minimum of five (5) years of experience in performing power systems studies.

B. The resume of the registered professional electrical engineer shall be submitted for approval prior to the start of work. An experience table shall also be provided detailing the power systems studies of similar scope to this Contract that have been performed by the proposed engineer over the last two (2) years. The table shall, at a minimum, list the facility owner's

name, facility contact person with phone number and email address, and overall scope of work that was provided.

PART 2 -- PRODUCTS

2.01 POWER SYSTEM STUDIES

A. General

1. The Contractor shall provide Short Circuit Studies, Equipment Evaluation Studies, Protective Device Coordination Studies, Load Flow Analyses, and Arc Flash Hazard Studies for the entire electrical system. The studies shall be performed in accordance with IEEE 399, Recommended Practice for Industrial and Commercial System Power Analysis (IEEE Brown Book).

2. The studies shall include all portions of the electrical distribution system from the serving electric utility company protective devices, the normal and standby power sources down to and including the 208-volt equipment. The studies shall include all low voltage switchgear, motor control centers (MCCs), Variable Frequency Drives (VFDs) and panelboards as shown on the Drawings. System connections and those which result in maximum fault conditions shall be adequately covered in the study.

3. The studies shall be performed with the aid of SKM Systems Analysis Power Tools for Windows (PTW) software, Version 6.5 or newer. No other software analysis packages are acceptable.

B. Data Collection for the Studies

1. The Contractor shall collect all required utility transformer and service information for use in these studies. The serving electric utility representative contact information can be found in Section 16000, Basic Electrical Requirements.

2. One (1) field visit to the project site to collect pertinent data from existing equipment by the personnel performing the studies is permitted. The visit shall span as many days as required to collect all necessary information. This visit shall occur as soon after the Contract is awarded as possible and shall be coordinated with the Owner. The Contractor and personnel performing these studies are responsible for collecting all required data for these studies.

C. Short Circuit Studies

1. The short circuit study shall be performed in accordance with the latest editions of IEEE Std. 399 and IEEE Std. 141.

2. The study input data shall include the serving electric utility company's short circuit contribution, resistance and reactance components of the branch impedances, the X/R ratios, base quantities selected, and other source impedances.

3. Short circuit close and latch duty values and interrupting duty values shall be calculated on the basis of assumed three-phase bolted short circuits at each bus, low voltage switchgear, low voltage motor control center, distribution panelboard, pertinent branch circuit panel and other significant locations through the system. The short circuit tabulations shall include symmetrical fault currents, and X/R ratios. For each fault location, the total duty on the bus, as well as the individual contribution from each connected branch, shall be listed with its respective X/R ratio.

4. The short circuit study report shall include recommendations for equipment selection based on calculated short circuit values and all input and output data from the software model.

D. Equipment Evaluation Studies

1. An equipment evaluation study shall be performed to determine the adequacy of both existing and proposed circuit breakers, panelboards, motor control centers, automatic transfer switches, busses, etc. located at the plant by tabulating and comparing the short circuit ratings of these devices with the calculated fault currents. Appropriate multiplying factors based on system X/R ratios and protective device rating standards shall be applied. A table shall be provided in the report showing the calculated fault currents and the corresponding short circuit ratings of the existing equipment.

E. Protective Device Coordination Studies

1. A protective device coordination study shall be performed to provide the necessary calculations and logic decisions required to select or to check the selection of power fuse ratings, protective relay characteristics and settings, ratios and characteristics of associated current transformers, and low voltage circuit breaker trip characteristics and settings.

2. The coordination study shall include all low voltage classes of equipment from the serving electric utility company service protective devices down to and including all adjustable circuit protective devices. The phase and ground overcurrent protection shall be included as well as settings of all other adjustable protective devices.

3. The time-current characteristics of the proposed protective devices shall be printed on a log-log scale. The plots shall include complete titles, representative one-line diagram and legends, significant motor starting characteristics, complete parameters of transformers, complete operating bands of low voltage circuit breaker trip curves and fuses. The coordination plots shall indicate the types of protective devices selected, proposed relay taps, time dial and instantaneous trip settings, transformer magnetizing inrush and ANSI transformer withstand parameters, cable thermal overcurrent withstand limits and significant symmetrical and asymmetrical fault currents. All restrictions of the National Electrical Code shall be adhered to and proper coordination intervals and separation of characteristic curves shall be maintained. The coordination plots for phase and ground protective devices shall be provided on a system basis. A sufficient number of separate curves shall be used to clearly indicate the coordination achieved.

4. The selection and settings of the protective devices shall be provided separately in a tabulated form listing circuit identification, IEEE device number, current transformer ratios and connections, manufacturer and type, range of adjustment and recommended settings.

F. Load Flow Analyses

1. A load-flow analysis shall be performed to determine the steady-state loading profile of the plant. The analysis shall be based on both the serving electric utility as a source and the standby generator as a source. From the results of the load flow analysis, the report shall indicate areas of overloaded conductors or equipment in the power distribution system design.

2. The report shall also include a total source load summary table, as well as single line diagrams showing only the load flow data.

3. Load flow analysis results shall also be presented in a tabular format in the report.

G. Arc Flash Hazard Studies

1. An Arc Flash Hazard Study shall be performed in accordance with IEEE Std. 1584, NFPA 70E, and OSHA 29-CFR, Part 1910 Subpart S.

2. The Arc Flash Hazard Study Report shall include but not be limited to the following:

a. An executive summary outlining the electrical distribution system

b. A brief overview of what arc flash hazards are and how to avoid them.

c. Serving electric utility information received. Copies of the information received shall be included in an appendix.

d. All assumptions made to complete the report

e. Definitions of key terms used in the report

f. Any recommendations to reduce the arc flash incident energies where they are found to exceed a hazard risk category of 2.

g. A PPE table that defines the Personnel Protective Equipment (PPE) classes and clothing descriptions identified in the report and labels.

h. Arc flash hazard warning labels as specified herein.

i. An NFPA 70E energized work permit for each location where a warning label is provided.

j. Arc flash evaluation summary sheets as specified herein

k. Separate set of single line diagrams that show incident energies, hazard risk categories, and protective device settings. Only pertinent arc flash hazard data shall be displayed on these single line diagrams. Data from all other study calculations shall not be shown.

3. The following parameters shall be used in the Arc Flash Hazard Study:

   a. Working distance for all equipment: 18”

   b. Maximum arc duration for all equipment: 2 seconds

   c. Incident energies, arc flash hazard boundaries, and hazard risk categories shall be calculated over a +/- 15% of calculated arcing fault current. The worst-case incident energies that result shall be used in the study report.

   d. The equipment that connects to both the electric utility service and the standby power is in an open-transition configuration. The power sources will be incapable of paralleling with each other.

   e. The arc flash analysis shall be performed as if the facility is being supplied by either of the electric utilities **and** as if the facility is being supplied by the standby generators. The worst-case values from each calculation shall be used in the study report.

4. Arc Flash Warning Labels shall be produced for each location that allows access to energized parts. Labels shall be printed in color on adhesive backed labels. Labels shall be an ANSI Z535.4 compliant (minimum size 4 in. x 6 in.) thermal transfer type label. For incident energy values of less than 40 cal/cm^2, the labels shall have an orange colored header with the word “WARNING”. For incident energy values equal to and above 40 cal/cm^2, the labels shall have a red colored header with the word “DANGER”. Each label shall include the following information:

   a. Bus name

   b. System operating voltage

   c. Date of issue

   d. Flash hazard protection boundary

   e. Limited approach boundary

   f. Restricted boundary

   g. Prohibited boundary

   h. Incident energy level

   i. Required personal protective equipment class (Hazard risk category)

5. Arc Flash Evaluation Summary Sheets shall be produced. All values shown on the Summary Sheets shall be commensurate with the values shown on the single

line diagrams. Summary sheets shall list the following:

a. Bus name

b. Upstream protective device name and protective device settings

c. Bus line-to-line voltage

d. Bus bolted fault

e. Protective device bolted fault current

f. Arcing fault current

g. Protective device trip / delay time

h. Breaker opening time

i. Solidly grounded column

j. Equipment type

k. Gap

l. Arc flash boundary

m. Working distance

n. Incident energy

o. Required personal protective equipment class (hazard risk category)

2.02 Study Reports

A. The results of the Power Systems Studies shall be summarized in a series of reports. A total of three (3) separate reports shall be provided as follows:

1. Preliminary Report – The Preliminary Report shall consist of all power systems studies as specified herein, with the following exceptions:

a. NFPA 70E energized work permits shall not be included

b Arc flash hazard warning labels shall be printed on plain paper for **format review purposes only**. Actual labels with calculated values shall not be included.

2. Pre-Final Report – The Pre-Final Report shall incorporate all comments received from the previous report review and shall include specific equipment data from the approved shop drawings of the proposed electrical equipment. The Pre-final Report shall consist of all power systems studies as specified herein, with the following exceptions:

a. NFPA 70E energized work permits shall not be included

b. Sample arc flash hazard warning labels shall be printed on plain paper for **calculated value review purposes**. Actual adhesive labels shall not be included.

3. Final Report – The Final Report shall consist of all power systems studies as specified herein, including final adhesive arc flash hazard warning labels. Final report shall incorporate all installed electrical equipment, including any field changes made during construction, and all comments received from the previous report review. All 'as-left' protective device settings shall be included in the report.

B. Reports shall be furnished in the quantities specified herein, neatly organized into properly identified 3" (minimum) 3-ring binders. Tabs shall clearly separate each section of the report. Each report shall begin with a table of contents. The following sections shall be included in the report as a minimum:

1. Executive Summary

2. Short Circuit Study

3. Equipment Evaluations

4. Protective Device Coordination Study

5 Load Flow Analysis

6. Arc Flash Study

C. All data used in the reports such as conductor sizes and lengths, motor sizes, utility contribution information, and the like shall be included in the appendices of the report.

D. All single line diagrams and time current curves shall be provided in the reports on 11x17 paper, properly folded to fit into the report binder. Use of standard 8.5x11 paper for these purposes is not permitted. Single line diagrams shall be appropriately split up between several sheets (if required) to allow the drawing scale to be adjusted in order to make text and symbols legible.

PART 3 – EXECUTION

3.01 FIELD ADJUSTMENT

A. Contractor shall adjust all relay and protective device settings according to the recommended settings table provided in the **approved** Pre-Final Report.

B. Contractor shall make minor modifications to equipment as required to accomplish conformance with short circuit and protective device coordination studies.

3.02 ARC FLASH LABELS

A Contractor shall place approved adhesive arc flash labels on equipment after the Final Report is reviewed and approved.

3.03 TRAINING

A. The Contractor shall train the Owner's qualified electrical personnel of the potential arc flash hazards associated with working on energized equipment (minimum of 4 hours). The training shall be certified for continuing education units (CEUs) by the International Association for Continuing Education Training (IACET) or equivalent.

- END OF SECTION -

THIS PAGE INTENTIONALLY LEFT BLANK

SECTION 16111 – CONDUIT

PART 1 -- GENERAL

1.01 THE REQUIREMENT

A. The Contractor shall furnish and install conduits and conduit fittings to complete the installation of all electrically operated equipment as specified herein, indicated on the Drawings, and as required.

B. Requirements for conduit clamps, support systems, and anchoring are not included in this Section. Reference Section 16190, Electrical Supporting Devices, for these requirements.

C. Reference Section 16000, Basic Electrical Requirements.

1.02 CODES AND STANDARDS

A. Conduits and conduit fittings shall be designed, manufactured, and/or listed to the following standards as applicable:

1. American National Standards Institute (ANSI)

   a. ANSI B1.20.1 – Pipe Threads, General Purpose

   b. ANSI C80.1 – Electrical Rigid Steel Conduit

   c. ANSI C80.3 – Steel Electrical Metallic Tubing

   d. ANSI C80.5 – Electrical Rigid Aluminum Conduit

   e. ANSI FB 1 – Fittings, Cast Metal Boxes, and Conduit Bodies for Conduit, Electrical Metallic Tubing, and Cable

2. Underwriters Laboratories (UL)

   a. UL 1 – Standard for Flexible Metal Conduit

   b. UL 6 - Electrical Rigid Metal Conduit-Steel

   c. UL 6A – Electrical Rigid Metal Conduit-Aluminum, Red Brass, and Stainless Steel

   d. UL 360 – Standard for Liquid-tight Flexible Metal Conduit

   e. UL 467 – Grounding and Bonding Equipment

   f. UL 514B – Conduit, Tubing, and Cable Fittings

   g. UL 651 – Standard for Schedule 40 and 80 Conduit and Fittings

   h. UL 797 – Electrical Metallic Tubing-Steel

i. UL 1203 - Standard for Explosion-proof and Dust-ignition-proof Electrical Equipment for use in Hazardous (Classified) Locations

j. UL 1479 – Standard for Fire Tests of Penetration Fire Stops

k. UL 1660 – Liquid-tight Flexible Nonmetallic Conduit

3. National Electrical Manufacturer's Association (NEMA)

a. NEMA RN 1 – PVC Externally Coated Galvanized Rigid Steel Conduit

b. NEMA TC-2 – Electrical PVC Conduit

c. NEMA TC-3 – PVC Fittings for Use with Rigid PVC Conduit and Tubing

B. Others

1. ACI-318 – Building Code Requirements for Structural Concrete

1.03 SUBMITTALS

A. In accordance with the procedures and requirements set forth in the General Conditions and Section 01300 – Submittals, the Contractor shall obtain from the equipment manufacturer and submit the following:

1. Shop Drawings

B. Each submittal shall be identified by the applicable specification section.

1.04 SHOP DRAWINGS

A. Each submittal shall be complete in all respects, incorporating all information and data listed herein and all additional information required for evaluation of the proposed equipment's compliance with the Contract Documents.

B. Partial, incomplete, or illegible submittals will be returned to the Contractor without review for resubmittal.

C. Shop drawings shall include but not be limited to:

1. Product data sheets for conduits and fittings.

2. Conduit identification methods and materials.

3. Evidence of training for all personnel that will install PVC coated rigid metal conduit.

1.05 DEFINITIONS

A. Conduits are categorized by the circuit type of the wiring to be installed inside. Conduits are defined as follows:

1. Power Conduits – Conduits that carry AC or DC power wiring from a source to a load. Conduits that carry lighting and receptacle wiring.

2. Control Conduits – Conduits that carry AC or DC discrete control wiring between devices and/or equipment. Conduits that carry fiber optic cables between devices and/or equipment.

3. Instrumentation Conduits – Conduits that carry AC or DC analog signal wiring between devices and/or equipment.

B. Conduit categories are indicated on the Drawings by the leading letter of the conduit tag. Conduit tag leading letters are defined as follows:

1. P – Power Conduit

2. C – Control Conduit

3. I – Instrumentation Conduit

PART 2 – PRODUCTS

2.01 GENERAL

A. Conduit and conduit fitting products are specified in the text that follows this article. Reference Part 3 herein for the application, uses and installation requirements of these conduits and conduit fittings.

B. All metallic conduit fittings shall be UL 514B and UL 467 Listed, and constructed in accordance with ANSI FB 1. All metallic conduit fittings for use in Class I Division I hazardous areas shall be UL 1203 Listed. All non-metallic fittings shall be UL 651 Listed and constructed in accordance with NEMA TC-3.

C. Flexible conduit couplings for use in Class I Division I hazardous areas shall have threaded stainless steel end fittings and a flexible braided core. Flexible braid shall be constructed of stainless steel where available in the conduit trade size required for the application. Where stainless steel braid is not available, the braid shall be provided with a PVC coating. No other braid types or materials are acceptable.

D. Where threading is specified herein for conduit fitting connections, the fittings shall be manufactured to accept conduit that is threaded to ANSI B1.20.1 requirements.

E. Conduit expansion fittings for all conduit materials of construction shall be capable of 4 inches of movement along the axis of the conduit for trade sizes 2 inches or less. Expansion fittings shall be capable of 8 inches of movement along the axis of the conduit for trade sizes greater than 2 inches.

F. Conduit deflection fittings for all conduit materials of construction shall be provided with a flexible neoprene outer jacket that permits up to ¾ inch of expansion/contraction along the axis of the conduit as well as up to ¾ inch of parallel misalignment between the conduit axes. Outer jacket shall be secured to the conduit hubs by stainless steel clamps.

G. Conduit seals shall either be Listed and labeled for 40% fill, or conduit reducing fittings and a trade size larger conduit seal shall be provided to achieve 25% or less fill within the seal. Percentage fill calculation shall be based on the conductors to be installed. Conduit seals shall be provided with breathers and/or drains where required by the NEC.

H. Conduit insulating bushings shall be constructed of plastic and shall have internal threading.

I. Additional conduit and conduit fitting requirements are specified in the articles that follow based on the specific conduit material of construction to be used.

2.02 RIGID NONMETALLIC CONDUIT AND ASSOCIATED FITTINGS

A. Conduit

1. Conduit shall be Schedule 40 or 80 (dependent on application) polyvinyl chloride (PVC) construction, manufactured in accordance with NEMA TC-2, UL 651 Listed, and suitable for conductors with 90 degree C insulation.

B. Conduit Bodies for use with Rigid Nonmetallic Conduit

1. Conduit bodies shall be constructed of PVC. Conduit hubs shall be integral to the conduit body and shall be smooth inside to accept a glued conduit connection.

2. Conduit body shall be provided with cover that is affixed in place by stainless steel screws which thread directly into the conduit body. Covers that utilize wedge nuts or any other method of attachment to the conduit body are not acceptable. Covers shall be provided with matching gasket.

C. Conduit Couplings and Unions for use with Rigid Nonmetallic Conduit

1. Conduit couplings and unions shall be constructed of PVC and shall be smooth inside to accept a glued conduit connection.

D. Conduit Expansion and Deflection Fittings for use with Rigid Nonmetallic Conduit

1. Conduit expansion fittings and conduit deflection fittings shall be constructed of PVC and shall be smooth inside to accept a glued conduit connection.

E. Conduit Termination Fittings for use with Rigid Nonmetallic Conduit

1. Conduit hubs shall be constructed of PVC and shall be smooth inside to accept a glued conduit connection. Hubs shall have external threads and an accompanying PVC locknut, and shall be watertight when assembled to an enclosure.

2. Conduit locknuts shall be constructed of zinc plated steel. Locknuts shall have internal threading. Locknuts constructed of PVC and locknuts with integral gasket or seal are not acceptable.

3. Conduit end bells shall be constructed of PVC and shall be smooth inside to accept a glued conduit connection. End bell shall have a smooth inner surface that curves outward towards the edge of the fitting.

2.03 PVC COATED RIGID GALVANIZED STEEL CONDUIT AND ASSOCIATED FITTINGS

A. General

1. Where an external coating of polyvinyl chloride (PVC) is specified for conduit and fittings, the coating shall be 40 mil (minimum) thickness. Where an internal coating of urethane is specified for conduit and fittings, the coating shall be 2 mil (minimum) thickness.

2. All conduit fittings shall have a sealing sleeve constructed of PVC which covers all connections to conduit. Sleeves shall be appropriately sized so that no conduit threads will be exposed after assembly.

B. Conduit

1. Conduit shall be hot dip galvanized on the inside and outside, and made of heavy wall high strength ductile steel. Conduit shall be manufactured in accordance with ANSI C80.1, and shall be UL 6 Listed.

2. Conduit shall be provided with factory-cut 3/4 inch per foot tapered threads at each end in accordance with ANSI B1.20.1. Threads shall be cut prior to galvanizing to ensure corrosion protection adequately protects the threads. Conduit shall be provided with a matching coupling on one end and a color-coded thread protector on the other.

3. Conduit shall be coated on the exterior with a PVC jacket and coated on the interior with a layer of urethane. Conduit shall be manufactured in accordance with NEMA RN-1.

C. Conduit Bodies for use with PVC Coated Rigid Galvanized Steel Conduit

1. Conduit bodies shall be constructed of an electro-galvanized malleable iron alloy which is coated on the exterior with a PVC jacket and coated on the interior with a layer of urethane. Conduit bodies shall have integral threaded conduit hubs.

2. Conduit bodies for Class I Division I hazardous areas shall be provided with integrally threaded covers constructed of an electro-galvanized malleable iron alloy which is coated on the exterior with a PVC jacket and coated on the interior with a layer of urethane.

3. Conduit bodies for all other areas shall be constructed of an electro-galvanized malleable iron alloy which is coated on the exterior with a PVC jacket and coated on the interior with a layer of urethane. Covers shall be affixed in place by stainless

steel screws which thread directly into the conduit body and have a plastic encapsulated head. Covers that utilize wedge nuts or any other method of attachment to the conduit body are not acceptable. Covers shall be provided with matching gasket.

D. Conduit Couplings, Nipples, and Unions for use with PVC Coated Rigid Galvanized Steel Conduit

1. Couplings and nipples shall be threaded and shall be constructed of hot dipped galvanized steel which is coated on the exterior with a PVC jacket and coated on the interior with a layer of urethane. Split-type couplings that use compression to connect conduits are not acceptable.

2. Unions shall be threaded, rain-tight, and constructed of an electro-galvanized malleable iron alloy which is coated on the exterior with a PVC jacket and coated on the interior with a layer of urethane.

E. Conduit Expansion and Deflection Fittings for use with PVC Coated Rigid Galvanized Steel Conduit

1. Conduit expansion fittings and conduit deflection fittings shall be constructed of an electro-galvanized malleable iron alloy which is coated on the exterior with a PVC jacket and coated on the interior with a layer of urethane. Expansion and deflection fittings shall have threaded conduit connections.

2. Expansion fittings shall have an integral bonding jumper and deflection fittings shall have an external bonding jumper.

F. Conduit Seals for use with PVC Coated Rigid Galvanized Steel Conduit

1. Conduit seals shall be constructed of an electro-galvanized malleable iron alloy which is coated on the exterior with a PVC jacket and coated on the interior with a layer of urethane. Conduit seals shall have threaded conduit connections.

G. Conduit Termination Fittings for Use with PVC Coated Rigid Galvanized Steel Conduit

1. Conduit hubs shall be constructed of an electro-galvanized malleable iron alloy which is coated on the exterior with a PVC jacket and coated on the interior with a layer of urethane. Hubs shall have threaded connections to the conduit and enclosure. Hubs shall have a plastic insulated throat and shall be watertight when assembled to an enclosure.

2. Conduit bonding bushings shall be constructed of zinc plated malleable iron which is coated on the exterior with a PVC jacket and coated on the interior with a layer of urethane. Bonding bushings shall have a threaded conduit connection. Bonding bushing shall be provided with properly sized set screw for connecting bonding conductor and an integral plastic insulator rated for 150 degrees C located in the throat.

2.04 RIGID ALUMINUM CONDUIT AND ASSOCIATED FITTINGS

A. Conduit

1. Conduit shall be made of heavy wall high strength 6063 alloy aluminum with temper designation T1. Conduit shall be manufactured in accordance with ANSI C80.5, and shall be UL 6A Listed.

2. Conduit shall be provided with factory-cut 3/4 inch per foot tapered threads at each end in accordance with ANSI B1.20.1. Threads shall be cut prior to galvanizing to ensure corrosion protection adequately protects the threads. Conduit shall be provided with a matching coupling on one end and a color-coded thread protector on the other.

B. Conduit Bodies for use with Rigid Aluminum Conduit

1. Conduit bodies shall be constructed of copper-free aluminum which is coated with an aluminum enamel finish. Conduit bodies shall have integral threaded conduit hubs.

2. Conduit bodies for Class I Division I hazardous areas shall be provided with integrally threaded covers constructed of copper-free aluminum which is coated with an aluminum enamel finish.

3. Conduit bodies for all other areas shall be provided with stamped copper-free aluminum covers that are affixed in place by stainless steel screws which thread directly into the conduit body. Covers that utilize wedge nuts or any other method of attachment to the conduit body are not acceptable. Covers shall be provided with matching gasket.

C. Conduit Couplings, Nipples, and Unions for use with Rigid Aluminum Conduit

1. Couplings and nipples shall be threaded and shall be constructed of heavy wall high strength 6063 alloy aluminum with temper designation T1. Split-type couplings that use compression to connect conduits are not acceptable.

2. Unions shall be threaded, rain-tight, and constructed of copper-free aluminum which is coated with an aluminum enamel finish.

D. Conduit Expansion and Deflection Fittings for use with Rigid Aluminum Conduit

1. Conduit expansion fittings and conduit deflection fittings shall be constructed of copper-free aluminum which is coated with an aluminum enamel finish. Expansion and deflection fittings shall have threaded conduit connections.

2. Expansion fittings shall have an integral bonding jumper and deflection fittings shall have an external bonding jumper.

E. Conduit Seals for use with Rigid Aluminum Conduit

1. Conduit seals shall be constructed of copper-free aluminum which is coated with an aluminum enamel finish. Conduit seals shall have threaded conduit connections.

F. Conduit Termination Fittings for use with Rigid Aluminum Conduit

1. Conduit hubs shall be constructed of copper-free aluminum and shall have threaded connections to the conduit and enclosure. Hubs shall have a plastic insulated throat and shall be watertight when assembled to an enclosure.

2. Conduit locknuts shall be constructed of copper-free aluminum. Locknuts shall have internal threading. Locknuts with integral gasket or seal are not acceptable. Locknuts shall have integral bonding screw where required for proper bonding.

3. Conduit bonding bushings shall be constructed of copper-free aluminum. Bonding bushings shall have a threaded conduit connection. Bonding bushing shall be provided with properly sized set screw for connecting bonding conductor and an integral plastic insulator rated for 150 degrees C located in the throat.

2.05 LIQUID TIGHT FLEXIBLE METAL CONDUIT (LFMC) AND ASSOCIATED FITTINGS

A. Conduit

1. Conduit shall be manufactured using a single strip of hot dip galvanized high strength steel alloy, helically formed into a continuously interlocked flexible metal conduit. Trade size 1-1/4 inch and smaller conduits shall be provided with an integrally woven copper bonding strip.

2. Conduit shall be covered with an outside PVC jacket that is UV resistant, moisture-proof, and oil-proof. Conduit shall be UL 360 Listed.

B. Conduit Termination Fittings for use with LFMC

1. Conduit termination fittings shall be constructed of either 304 stainless steel or an electro-galvanized malleable iron alloy which is coated on the exterior with a 40 mil (minimum) PVC jacket and coated on the interior with a 2 mil (minimum) layer of urethane. PVC coated fittings shall have a sealing sleeve constructed of PVC which covers the connection to conduit.

2. Termination fittings shall have a threaded end with matching locknut and sealing ring for termination to equipment, and shall have an integral external bonding lug where required for proper bonding. Termination fittings shall have a plastic insulated throat and shall be watertight when assembled to the conduit and equipment.

2.06 LIQUID TIGHT FLEXIBLE NONMETALLIC CONDUIT (LFNC) AND ASSOCIATED FITTINGS

A. Conduit

1. Conduit shall be constructed of rigid polyvinyl chloride (PVC), fabricated to provide flexibility. Conduit shall be covered with an outside PVC jacket that is UV resistant, moisture-proof, and oil-proof. Conduit shall be UL 1660 Listed.

B. Conduit Termination Fittings for use with LFNC

1. Conduit termination fittings shall be constructed PVC and shall have a threaded end with matching locknut and sealing ring for termination to equipment. Termination fittings shall be watertight when assembled to the conduit and equipment.

2.07 FLEXIBLE METAL CONDUIT (FMC) AND ASSOCIATED FITTINGS

A. Conduit

1. Conduit shall be manufactured using a single strip of hot dip galvanized high strength steel alloy, helically formed into a continuously interlocked flexible metal conduit. Conduit shall be UL 1 Listed.

B. Conduit Termination Fittings for use with FMC

1. Conduit termination fittings shall be constructed of an electro-galvanized malleable iron alloy. Fittings shall have a threaded end with matching locknut for termination to equipment, and a compression-style connection to the associated conduit.

2.08 ELECTRICAL METALLIC TUBING (EMT) AND ASSOCIATED FITTINGS

A. Conduit

1. Conduit shall be hot dipped galvanized on the inside and outside, and made of cold-rolled steel tubing. Conduit shall be manufactured in accordance with C80.3 and shall be UL 797 listed.

B. Conduit Bodies for use with EMT

1. Conduit bodies shall be constructed of an electro-galvanized malleable iron alloy which is coated with an acrylic paint finish. Conduit bodies shall have integral threaded conduit hubs.

2. Conduit bodies shall be provided with galvanized sheet steel covers that are affixed in place by stainless steel screws which thread directly into the conduit body. Covers that utilize wedge nuts or any other method of attachment to the conduit body are not acceptable. Covers shall be provided with matching gasket.

C. Conduit Couplings and Nipples for use with EMT

1. Couplings and nipples shall have threaded compression connectors with associated gland and shall be constructed of electro-galvanized steel. Fittings utilizing a set screw or indenter tool to secure the associated conduit to the fitting are not acceptable. Couplings and nipples shall be rain-tight and have a plastic insulated throat.

D. Conduit Expansion and Deflection Fittings for use with EMT

1. Conduit expansion fittings and conduit deflection fittings shall be constructed of an electro-galvanized malleable iron alloy which is coated with an acrylic paint finish. Expansion and deflection fittings shall have threaded conduit connections.

2. Expansion fittings shall have an integral bonding jumper and deflection fittings shall have an external bonding jumper.

E. Conduit Termination Fittings for use with EMT

1. Conduit termination fittings shall be constructed of electro-galvanized steel and have a plastic insulated throat. Termination fittings shall have a threaded compression connector with associated gland on one end and external threads on the other end. Termination fittings utilizing a set screw or indenter tool to secure the associated conduit to the fitting are not acceptable.

2. Conduit locknuts shall be constructed of zinc plated steel. Locknuts shall have internal threading. Locknuts shall have integral bonding screw where required for proper bonding.

2.09 CONDUIT BENDS

A. Rigid conduit bends, both factory fabricated and field fabricated, shall meet the same requirements listed in the articles above for the respective conduit type and material of construction.

B. Conduit bend radii for standard radius bends shall be no less than as follows:

TRADE SIZE (inches)	3/4	1	1-1/4	1-1/2	2	2-1/2	3	3-1/2	4	5	6
MIN. RADIUS (inches)	4-1/2	5-3/4	7-1/4	8-1/4	9-1/2	10-1/2	13	15	16	24	30

C. Conduit bend radii for long radius bends shall be no less than as follows:

TRADE SIZE (inches)	3/4	1	1-1/4	1-1/2	2	2-1/2	3	3-1/2	4	5	6
MIN. RADIUS (inches)	N/A	12	18	24	30	30	36	36	48	48	60

2.10 MISCELLANEOUS

A. Conduit Periphery Sealing

1. The sealing of the exterior surface of conduits to prevent water and/or air from passing around the conduit periphery from one space to another (where required) shall be through the use of one of the following:

a. A conduit sleeve and pressure bushing sealing system. Acceptable products are FSK by OZ-GEDNEY, Link-Seal by Crouse-Hinds, or Engineer approved equal.

b. A conduit sleeve that is two trade sizes larger than the conduit being sealed, with 2-hour fire rated UL 1479 Listed caulk filling the entire void between the conduit and sleeve. This method is only suitable for penetrations in non-fire rated walls and floors between spaces within buildings. This method shall not be used for the sealing of conduits leaving a building and/or structure.

2. Conduit penetrations through fire-rated walls and floors shall be made with an approved UL 1479 Listed product specifically intended for the trade size of the conduit.

B. Primer and Cement

1. Nonmetallic conduit shall be cleaned with primer and connected to fittings with the manufacturer's recommended cement that is labeled Low VOC.

C. Galvanizing Compounds

1. Galvanizing compounds for field application shall be the cold-applied type, containing no less than 93% pure zinc.

D. Conduit Interior Sealing

1. The sealing of the inside of conduits against water ingress shall be achieved through the use of one of the following:

a. Two-part expanding polyurethane foam sealing compound, dispensed from a single tube which mixes the two parts as it is injected into the conduit. Expanding foam shall be compatible with the conduit material of construction as well as the outer jacket of the cables in the conduit. Acceptable products are Q-Pak 2000 by Chemque, FST by American Polywater Corporation, or Hydra-seal S-60 by Duraline.

b. Inflatable bag that provides seal around cables and around inside diameter of conduit. Provide appropriate quantity of additional fittings for applications with three or more cables in the conduit to be sealed. Acceptable products are Rayflate by Raychem, or Engineer approved equal. This sealing method is only applicable to conduits trade size 2 inch and larger.

c. Neoprene sealing ring provided with the required quantity and diameter of holes to accommodate the cables in each conduit. Sealing ring shall be compressed by two stainless steel pressure plates. Acceptable products are type CSB by OZ-GEDNEY, or Engineer approved equal. This sealing method is only applicable to metallic conduits containing 4 or less cables.

2. The use of aerosol-based expanding foam sealants or any other method of sealing against water ingress not listed above is not acceptable.

E. Pull Rope

1. Pull ropes for empty and/or spare conduits shall be woven polyester, 1/2 inch wide, with a minimum tensile strength of 1250 lbs.

2. Pull ropes for the Contractors use in installing conductors shall be the size and strength required for the pull, and shall be made of a non-metallic material.

PART 3 – EXECUTION

3.01 GENERAL

A. Minimum trade size for all rigid conduits shall be 3/4 inch in exposed applications and 1 inch in embedded applications. Conduits installed within ductbanks shall be allowed to be increased in size to trade size 2 inch, at the Contractor's option, to accommodate the saddle size of the ductbank spacers. However, no combining of circuits shall be allowed in the larger conduits.

B. Minimum trade size for flexible conduits (where specifically allowed herein) shall be 1/2 inch in all applications.

C. Conduit routing and/or homeruns within structures is not shown on the Drawings. Conduits shall be installed concealed wherever practical and within the limitations specified herein. All other conduits not capable of being installed concealed shall be installed exposed.

D. Empty and/or spare conduits shall be provided with pull ropes which have no less than 12 inches of slack at each end.

E. Nonmetallic conduits for installations requiring less than a factory length of conduit shall be field cut to the required length. The cut shall be made square, cleaned of debris, and primer shall be applied to ready each joint for fusing. Conduits shall then be fused together with the conduit manufacturer's approved cement compound.

F. Metallic conduits for installations requiring less than a factory length of conduit shall be field cut to the required length. The cut shall be made square, be cleaned of all debris and be de-burred, then threaded. Conduit threading performed in the field shall be ¾ inch per foot tapered threads in accordance with ANSI B1.20.1.

G. Conduits shall be protected from moisture, corrosion, and physical damage during construction. Install dust-tight and water-tight conduit fittings on the ends of all conduits immediately after installation and do not remove until conductors are installed.

H. Conduits shall be installed to provide no less than 12 inches clearance from pipes that have the potential to impart heat upon the conduit. Such pipes include, but are not limited to, hot water pipes, steam pipes, exhaust pipes, and blower air pipes. Clearance shall be maintained whether conduit is installed in parallel or in crossing of pipes.

I. Where non-metallic instrumentation conduits are installed exposed, the following clearances to other conduit types shall be maintained:

1. Instrumentation conduits installed parallel to conduits with conductors energized at 480V or above shall be 18 inches.

2. Instrumentation conduits installed parallel to conduits with conductors energized at 240V and below shall be 12 inches.

3. Instrumentation conduits installed at right angles to conductors energized at 480V and below shall be 6 inches.

4. Instrumentation conduits installed at right angles to conductors energized at voltages above 480V shall be 12 inches.

J. Where conduit fittings do not include an integral insulated bushing, an insulated bushing shall be installed at all conduit termination points.

K. Conduits which serve multi-section equipment shall be terminated in the section where wiring terminations will be made.

L. Conduits shall not penetrate the floors or walls inside liquid containment areas without specific written authorization from the Engineer. Liquid containment areas are indicated on the Drawings.

M. In no case shall conduit be supported or fastened to another pipe or be installed in a manner that would prevent the removal of other pipes for repairs. Spring steel fasteners may only be used to affix conduits containing lighting branch circuits within EMT conduits to structural steel members.

N. All field fabricated threads for rigid galvanized steel conduit shall be thoroughly coated with two coats of galvanizing compound, allowing at least two minutes to elapse between coats for proper drying.

O. The appropriate specialized tools shall be used for the installation of PVC coated conduit and conduit fittings. No damage to the PVC coating shall occur during installation. Conduit and conduit fittings with damaged PVC coating shall be replaced at the Contractor's cost. The use of PVC coating touch-up compounds is not permitted.

P. Conduits which emerge from within or below concrete encasement shall be PVC coated rigid galvanized steel in accordance with Standard Detail 1611102 where the conduit is not protected by an equipment enclosure that surrounds the conduit on all sides at the point where it emerges from the encasement.

Q. Aluminum conduits shall not be installed in direct contact with concrete surfaces. Where aluminum conduits are routed along concrete surfaces, they shall be installed with one-hole electro-galvanized malleable iron alloy straps with matching clamp-backs to space the conduit ¼ inch away from concrete surface. Where aluminum conduit passes through concrete, CMU or brick walls, the penetration shall be made such that the aluminum conduit does not come in contact with concrete, CMU, brick or mortar.

3.02 CONCEALED AND EMBEDDED CONDUITS

A. Conduits are permitted to be installed concealed and/or embedded with the following requirements:

1. Conduits shall not be installed horizontally when concealed within CMU walls, only vertical installation is acceptable.

2. Conduits installed embedded within concrete floors or walls shall be located so as not to affect the designed structural strength of the floor or wall. Embedded conduits shall be installed in accordance with Standard Detail 0331604 and ACI-318.

3. Where conduit bends emerge from concrete embedment, none of the curved portion of the bend shall be visible. Only the straight portion of the bend shall be visible.

4. Where multiple conduits emerge from concrete embedment or from concealment below a concrete floor, ample clear space shall be provided between conduits to allow for the appropriate and required conduit termination fittings to be installed.

5. Conduits installed embedded within concrete encasement of any kind shall be installed such that conduit couplings for parallel conduits are staggered so that they are not side by side.

B. Conduits are NOT permitted to be installed concealed and/or embedded for the following situations:

1. Conduits shall not be installed embedded within any water-bearing floors or walls. Conduits shall not be installed embedded within any liquid containment area floors or walls.

2. Conduits shall not be installed concealed within CMU walls or gypsum walls that are adjacent to Class I and II hazardous areas (Division I and Division II).

3. Conduits shall not be installed concealed within CMU walls or gypsum walls that are adjacent to indoor Type 1 or Type 2 chemical storage/transfer areas.

3.03 CONDUIT USES AND APPLICATIONS

A. Rigid Conduit

1. Rigid conduit for non-hazardous areas shall be furnished and installed in the materials of construction as follows:

RIGID CONDUIT FOR NON-HAZARDOUS AREAS		
INSTALLATION AREA DESIGNATION/ SCENARIO	**CONDUIT CATEGORY BY WIRING/CIRCUIT TYPE**	
	Power and Control	**Instrumentation**
Exposed in indoor wet process areas	Rigid aluminum conduit	Same as Power and Control

RIGID CONDUIT FOR NON-HAZARDOUS AREAS		
INSTALLATION AREA DESIGNATION/ SCENARIO	**CONDUIT CATEGORY BY WIRING/CIRCUIT TYPE**	
	Power and Control	**Instrumentation**
Exposed in indoor dry process areas	Rigid aluminum conduit	Same as Power and Control
Exposed in indoor dry non-process areas	Rigid aluminum conduit	Same as Power and Control
Exposed in indoor Type 1 chemical storage/transfer areas	Schedule 80 rigid non-metallic PVC conduit	Same as Power and Control
Exposed in indoor Type 2 chemical storage/transfer areas	Rigid aluminum conduit	Same as Power and Control
Exposed in outdoor areas	Rigid aluminum conduit	Same as Power and Control
Exposed within pre-fabricated electrical equipment center buildings	Electrical Metallic Tubing	Same as Power and Control
Concealed within underground direct-bury or concrete-encased ductbanks	Schedule 40 rigid non-metallic PVC conduit	PVC coated rigid galvanized steel conduit
Concealed within non-elevated (i.e. "slab-on-grade" construction) concrete slabs	Schedule 40 rigid non-metallic PVC conduit	PVC coated rigid galvanized steel conduit
Concealed within elevated concrete slabs	Rigid galvanized steel conduit	PVC coated rigid galvanized steel conduit
Concealed below concrete slabs (within earth or fill material)	Schedule 40 rigid non-metallic PVC conduit	PVC coated rigid galvanized steel conduit
Concealed within concrete walls	Schedule 40 rigid non-metallic PVC conduit	PVC coated rigid galvanized steel conduit
Concealed within CMU walls	Schedule 40 rigid non-metallic PVC conduit or Electrical Metallic Tubing	Rigid galvanized steel conduit or Electrical Metallic Tubing
Concealed within interior walls constructed of metal studs and gypsum wall board	Electrical Metallic Tubing	Same as Power and Control
Emerging from concealment within or below a concrete floor and transitioning to exposed conduit (Reference Detail 1611102)	PVC coated rigid galvanized steel conduit	Same as Power and Control

2. The tables for the materials of construction for rigid conduits are intended to exhaustively cover all possible scenarios and installation areas under this Contract. However, if a scenario or installation area is found that is not explicitly governed by these tables, it shall be assumed for bid purposes that the conduit material of construction is to be rigid galvanized steel. This discrepancy shall be brought to the attention of the Engineer (in writing) immediately for resolution.

B. Conduit Bends

1. All conduit bends shall be the same material of construction as the rigid conduit listed in the tables above, with the following exceptions:

   a. All 90 degree bends or combinations of adjacent bends that form a 90 degree bend where concealed within concrete or below a concrete slab shall be PVC coated rigid galvanized steel.

2. Field fabricated bends of metallic conduit shall be made with a bending machine and shall have no kinks. Field fabricated standard radius and long radius bends shall have minimum bending radii in accordance with the associated tables in Part 2 herein.

3. Field bending of non-metallic conduits is not acceptable, factory fabricated bends shall be used.

4. Long radius bends shall be furnished and installed for the following specific applications, all other bends shall be standard radius:

   a. All conduits containing fiber optic cable.

   b. All conduits containing shielded VFD cable.

   c. Where specifically indicated on the Drawings.

C. Flexible Conduit

1. Flexible conduit shall only be installed for the limited applications specified herein. Flexible conduit shall not be installed in any other application without written authorization from the Engineer. Acceptable applications are as follows:

   a. Connections to motors and engine-generator sets (and similar vibrating equipment)

   b. Connections to solenoid valves and limit switches

   c. Connections to lighting fixtures installed in suspended ceilings

   d. Connections to lighting transformers

   e. Connections to pre-fabricated equipment skids

   f. Connections to HVAC equipment

g. Connections to instrument transmitters and elements

h. Where specifically indicated in the Standard Details

2. Flexible conduit length shall be limited to three (3) feet, maximum. Flexible conduit shall not be installed buried or embedded within any material.

3. Flexible conduit for non-hazardous areas shall be furnished and installed in the materials of construction as follows:

FLEXIBLE CONDUIT FOR NON-HAZARDOUS AREAS		
INSTALLATION AREA DESIGNATION/SCENARIO	**CONDUIT CATEGORY BY WIRING/CIRCUIT TYPE**	
	Power and Control	**Instrumentation**
Exposed in indoor wet process areas	Liquid-tight flexible metal conduit	Same as Power and Control
Exposed in indoor dry process areas	Liquid-tight flexible metal conduit	Same as Power and Control
Exposed in indoor dry non-process areas	Flexible metal conduit	Same as Power and Control
Exposed in indoor Type 1 chemical storage/transfer areas	Liquid-tight flexible non-metallic conduit	Same as Power and Control
Exposed in indoor Type 2 chemical storage/transfer areas	Liquid-tight flexible metal conduit	Same as Power and Control
Exposed in outdoor areas	Liquid-tight flexible metal conduit	Same as Power and Control
Concealed above suspended ceilings (all indoor areas)	Same material as exposed conduit in same area	Same as Power and Control

3.04 CONDUIT FITTING USES AND APPLICATIONS

A. General

1. Conduit fittings shall be furnished and installed in the materials of construction as indicated in Part 2, herein. Conduit fitting materials of construction are dependent on the material of construction used for the associated conduit.

2. Conduit fittings shall be provided in the trade size and configuration required to suit the application.

B. Conduit Bodies

1. Conduit bodies shall be installed where wire pulling points are desired or required, or where changes in conduit direction or breaking around beams is required.

2. Where conduit bodies larger than trade size 2 inches are intended to be used as a pull-through fitting during wire installation, oversized or elongated conduit bodies

shall be used. Oversized or elongated conduit bodies shall not be required if the conduit body is intended to be used as a pull-out point during wire installation.

C. Conduit Nipples and Unions

1. Conduits with running threads shall not be used in place of 3-piece couplings (unions) or close nipples. After installation of a conduit fitting of any kind, there shall be no more than ¼ inch of exposed threads visible. Factory fabricated all-thread nipples may be used between adjacent enclosures, however, the same restriction applies regarding the length of exposed threads that are visible.

D. Conduit Expansion and Deflection Fittings

1. Conduit expansion fittings shall be installed where required by the NEC and where indicated on the Drawings. Expansion fittings shall also be installed for exposed straight metallic conduit runs of more than 75 feet, in both indoor and outdoor locations. Expansion fittings for runs of non-metallic conduit shall be installed in accordance with the NEC.

2. Conduit deflection fittings shall be installed where required by the NEC and where conduits are installed (exposed and concealed) across structural expansion joints.

E. Conduit Seals

1. Conduit seals shall be installed for conduits installed within or associated with hazardous areas and other areas as required by the NEC. In addition, conduit seals shall also be furnished and installed as follows:

a. All conduits entering or leaving enclosed areas which store or distribute chlorine gas.

b. All conduits entering or leaving enclosed areas which store or distribute sulfur dioxide gas.

F. Conduit Termination Fittings

1. Where conduits terminate at enclosures with a NEMA 4, 4X, or 3R rating and the enclosure does not have integral conduit hubs, an appropriately sized watertight conduit hub shall be installed to maintain the integrity of the enclosure. The use of locknuts with integral gasket in lieu of watertight conduit hubs is not acceptable.

2. Where conduits terminate at enclosures that do not require conduit hubs, a two-locknut system shall be used to secure the conduit to the enclosure. One locknut shall be installed on the outside of the enclosure, and the other inside, drawn tight against the enclosure wall. The locknut on the interior of the enclosure shall be the type with integral bonding lug, or a conduit bonding bushing may be used in place of the locknut.

3. Conduits shall not be installed such that conduit fittings penetrate the top of any enclosure located outdoors, except in cases where specifically required by the serving electric utility. Conduits which serve outdoor equipment or an enclosure

from above shall instead be routed into the side of the enclosure at the bottom. The conduit termination fitting shall be provided with a conduit drain to divert moisture from the raceway away from the enclosure.

3.05 MISCELLANEOUS

A. Conduit Periphery Sealing

1. All conduit penetrations through exterior walls shall be sealed around the periphery using the appropriate products specified in Part 2 herein to prevent air and/or water entry into the structure.

2. All conduit penetrations through interior walls and floors shall be sealed through the use of with conduit sleeves and caulk as specified in Part 2 herein. Alternatively, mortar may be used to seal around the conduit periphery.

3. Conduit penetrations through fire-rated walls as floors shall be made with the appropriate fire rated penetration product.

B. Conduit Interior Sealing

1. All conduits (including spares) entering a structure below grade shall be sealed on the interior of the conduit against water ingress. Sealing shall be at an accessible location in the conduit system located within the building structure and shall be via one of the methods specified in Part 2 herein. If conduit sealing cannot be achieved at an accessible location within the building structure, sealing shall be placed in the conduits in the nearest manhole or handhole outside the structure.

3.06 CONDUIT IDENTIFICATION

A. Exposed conduits shall be identified at the source, load, and all intermediate components of the raceway system. Examples of intermediate components include but are not limited to junction boxes, pull boxes, and disconnect switches. Identification shall be by means of an adhesive label with the following requirements:

1. Labels shall consist of an orange background with black text. Text for the label shall be the conduit number as indicated in the conduit and wire schedules.

2. In addition, at the source end of the conduit, a second line of text shall be included to indicate the load equipment name. This second line shall consist of the word “TO:” and the text in the ‘TO’ column of the conduit and wire schedule (e.g. TO: High Service Pump No. 1). At the load end of the conduit, a second line of text shall be included to indicate the source equipment name. This second line shall consist of the word “FROM:” and the text in the ‘FROM’ column of the conduit and wire schedule (e.g. FROM: High Service Pump VFD No.1). This requirement applies only to the source and load ends of the conduit, and not anywhere in between.

3. For conduits trade sizes 3/4 inch through 1-1/2 inch, the text shall be a minimum 18 point font. For conduits trade size 2 inch and larger, the text shall be a minimum 24 point font.

4. Label height shall be 3/4 inch minimum, and length shall be as required to fit required text. The label shall be installed such that the text is parallel with the axis of the conduit. The label shall be oriented such that the text can be read without the use of any special tools or removal of equipment.

5. Labels shall be installed after each conduit is installed and, if applicable, after painting. Labels shall be printed in the field via the use of a portable label printing system. Handwritten labels are not acceptable.

6. Labels shall be made of permanent vinyl with adhesive backing. Labels made of any other material are not acceptable.

B. Conduits that are not exposed but installed beneath free standing equipment enclosures shall be identified by means of a plastic tag with the following requirements:

1. The tag shall be made of white Tyvek material, and have an orange label with black text, as described above, adhered to it. Text for the label shall be the conduit number as indicated in the conduit and wire schedules.

2. The tag shall be affixed to the conduit by means of a nylon cable tie. The tag shall be of suitable dimensions to achieve a minimum text size of 18 points.

C. Conduits for lighting and receptacle circuits shall not require identification.

D. Any problems or conflicts with meeting the requirements above shall immediately be brought to the attention of the Engineer for a decision.

3.07 TESTING

A. All tests shall be performed in accordance with the requirements of the General Conditions and Division 1. The following tests are required:

1. All conduit installed below grade or concrete encased shall be tested to ensure continuity and the absence of obstructions by pulling through each conduit a swab followed by a mandrel 85% of the conduit inside diameter. After testing, all conduits shall be capped after installation of a suitable pulling rope.

3.08 TRAINING OF INSTALLATION PERSONNEL

A. All Contractor personnel that install PVC coated RGS conduit shall be trained by the PVC coated RGS conduit manufacturer. Training shall include proper conduit system assembly techniques, use of tools appropriate for coated conduit systems, and field bending/cutting/threading of coated conduit. Training shall have been completed within the past 24 months prior to the Notice to Proceed on this Contract to be considered valid. Contractor personnel not trained within this timeframe shall not be allowed to install coated conduit, or shall be trained/re-trained as required prior to commencement of conduit installation.

- END OF SECTION -

SECTION 16118 – UNDERGROUND ELECTRICAL

PART 1 -- GENERAL

1.01 THE REQUIREMENT

A. The Contractor shall furnish and install underground duct systems, electric manholes, and electric handholes as specified herein and as indicated on the Drawings. The work shall be complete and shall include excavation, concrete construction, backfilling, and all materials, items, and components required for a complete system.

B. The provisions of this Division are applicable to all underground conduit work. All work shall be coordinated with that of the various utility companies and other Contractors. The Contractor shall adhere to all utility company requirements including the serving electric utility.

C. Reference Section 16000, Basic Electrical Requirements; Section 16111, Conduit; Section 16170, Grounding and Bonding; the applicable sections of Division 2, Sitework; Section 03200, Reinforcing Steel; and 03300, Cast-In-Place Concrete.

1.02 CODES AND STANDARDS

A. Products specified herein shall be designed, manufactured, and/or listed to the following standards as applicable:

1. AASHTO H20

2. ANSI/SCTE 77-2010 – Specification for Underground Enclosure Integrity

1.03 SUBMITTALS

A. In accordance with the procedures and requirements set forth in the General Conditions and Section 01300, Submittals, the Contractor shall obtain from the equipment manufacturer and submit Shop Drawings. Each submittal shall be identified by the applicable Specification Section.

1.04 SHOP DRAWINGS

A. Each submittal shall be complete in all respects, incorporating all information and data listed herein and all additional information required for evaluation of the proposed equipment's compliance with the Contract Documents.

B. Partial, incomplete, or illegible submittals will be returned to the Contractor without review for resubmittal.

C. Shop drawings shall include but not be limited to, the following:

1. Product data sheets.

2. Outline and dimensional drawings including detailed sections of the manholes and/or handholes.

3. Materials specifications and structural calculations for the manholes sealed by a Professional Engineer in the State of Florida.

1.05 IDENTIFICATION

A. Each electric manhole and handhole cover shall be lettered with the word “Electric”, the manhole or handhole identification number (e.g. UMH-1, EMH-1, EHH-1, etc.), manufacturer's name or trademark, and such other information as the manufacturer may consider necessary, or as specified, for complete identification.

PART 2 -- PRODUCTS

2.01 MANUFACTURERS

A. The material covered by this Specification is intended to be standard material of proven performance as manufactured by reputable concerns. Material shall be fabricated, constructed and installed in accordance with the best practices of the trade, and shall operate satisfactorily when installed as specified herein and indicated on the Drawings.

2.02 DUCT SYSTEM

A. The underground duct system shall be comprised of conduits, conduit bends, and conduit fittings as specified in Section 16111, Conduit. Conduits shall be encased in reinforced concrete envelopes, unless otherwise specified herein or indicated on the Drawings.

B. Base and intermediate conduit spacers shall be furnished to provide a minimum of two-inch (2”) separation between conduits. Conduit spacers shall be provided in the proper size as required for the conduit that they secure. For example, a 4” conduit spacer shall not be used to secure a 2” conduit. Conduit spacers shall be as manufactured by Carlon Electrical Products Company, Aeroquip Corporation, Underground Devices, Incorporated, or equal.

2.03 ELECTRIC MANHOLES

A. The concrete manholes shall be complete with metal frames and covers of size and location as specified herein and shown on the Drawings.

B. Manhole frames and covers shall be Neenah R-1640C1, or equal, with Type A anchor ring. Entire manhole assembly shall be AASHTO H20 heavy duty rated. Covers shall be furnished with drop handles.

C. All electric manholes shall be provided with non-metallic cable racks. Cable racks shall be rated for the application, with a minimum loading capacity of 450lbs per rack arm.

Cable rack system shall be Heavy Duty type as manufactured by Underground Devices, Incorporated or equal.

2.04 ELECTRIC HANDHOLES

A. The electric handholes shall be a precast polymer concrete enclosure suitable for use as part of an underground electric raceway system. The enclosure shall meet or exceed the requirements of ANSI/SCTE 77-2010.

B. The enclosure and cover design and test load rating shall be Tier 15. Covers shall be provided with cover hooks.

C. The enclosure shall be the straight side design to allow easy adjustment of box to grade. The box shall be stackable for increased depth.

D. Handhole opening size shall be as required to suit the application, 6” X 8”, minimum.

E. The electric handholes shall be manufactured by Hubbell, Pencell Plastics equivalent, Highline Products equivalent, or equal.

PART 3 -- EXECUTION

3.01 GENERAL

A. The underground duct system, manholes, and handholes shall be installed as specified herein, indicated on the Drawings, and in accordance with manufacturers’ instructions.

3.02 DUCT SYSTEM

A. All underground conduit shall be encased in concrete and shall be reinforced. Encasement and reinforcement shall be as indicated in the standard details. Concrete shall be furnished and installed in accordance with Section 03300. Reinforcing steel shall be furnished and installed in accordance with Section 03200. Concrete electrical duct banks shall contain red dye; the red dye shall be mixed into the concrete mix before being poured. Red dye applied to the top of concrete encasement after placement of concrete is not acceptable.

B. Concrete pours shall be complete from handhole to handhole and from manhole to manhole where practicable. Partial pours in general shall not be permitted. Where a complete pour is impractical, written authorization shall be obtained from the Engineer for the partial pour.

C. Conduit ductbank elevations at the manholes and handholes shall be based on minimum ductbank cover as indicated in the standard details, or deeper to avoid conflicts with other obstacles. Where deviation is necessary to clear unforeseen obstacles, the elevations may be changed after authorization by the Engineer.

D. Slope all conduits continuously away from structures and buildings with a minimum slope of 3” per 100’ unless otherwise indicated on the Drawings.

E. The minimum clearance from the top of the concrete encasement and finished grade shall be as indicated in the standard details, except where otherwise accepted in writing by the Engineer or shown on the Drawings.

F. Care shall be exercised during excavation for the duct banks to prevent digging too deep. Backfilling of low spots with earth fill will not be permitted unless thoroughly compacted and acceptable to the Engineer.

G. If a specific ductbank arrangement is shown on the Drawings, the conduits in that ductbank shall be arranged as shown. Where no specific ductbank arrangement is shown on the Drawings, the Contractor shall arrange conduits within each ductbank based on field conditions. Spare conduits shown going from ductbanks into buildings or structures shall be stubbed up in the location(s) as indicated on the Drawings.

H. A minimum of one (1) ground rod, furnished in accordance with Section 16170, shall be driven adjacent to each manhole, handhole, or other concrete box. A No. 4/0 AWG bare copper ground cable shall be connected between this rod and the copper ground strap using a silicon bronze connector. All ground rods shall be interconnected by means of the No. 4/0 AWG bare copper ground cable located within each duct bank. The ends of these cables shall also be connected to substation and/or building ground buses where the conduits terminate.

I. Care shall be exercised and temporary plugs shall be installed during installation to prevent the entrance of concrete, mortar, or other foreign matter into the conduit system. Conduit spacers shall be utilized to support conduit during the pouring of concrete to prevent movement and misalignment of the conduits. Conduit spacers shall be installed in accordance with manufacturer's instructions unless otherwise noted. Horizontal spacing of conduit spacers along ductbank shall be as indicated on the Standard Details.

J. Where connections to existing underground conduits are indicated, excavate to the maximum depth necessary. After addressing the existing conductors, cut the conduits and remove loose concrete from the conduits before installing new concrete encased ducts. Provide a reinforced concrete collar, poured monolithically with the new duct line, to take the shear at the joint of the duct lines.

K. Construct concrete-encased conduits connecting to underground structures to have a flared section adjacent to the manhole to provide shear strength. Construct underground structures to provide shear strength. Construct underground structures to provide for keying the concrete encasement of the duct line into the wall of the structure. Use vibrators when this portion of the encasement is poured to ensure a seal between the encasement and the wall of the structure.

L. Six (6) inches above all duct banks, the Contractor shall furnish and install a two (2) inch wide red plastic electrical hazard tape. Tapes shall be metallic detectable type and shall have a continuous message in bold black letters: "ELECTRIC LINE BURIED BELOW." Tape shall be Detectable Identoline by Brady, or equal.

M. The Contractor shall perform all earthwork including excavation, backfill, bedding, compaction, shoring and bracing, grading and restoration of surfaces and seeded areas disturbed during the execution of the work.

N. All conduit joints in the duct system shall be staggered such that adjacent conduits do not have joints in the same location.

3.03 ELECTRIC MANHOLES

A. Electric manholes shall be installed to a sufficient depth to accommodate the required grading of ducts as well as maintaining a minimum distance of 14” from the bottom of the lowest duct centerline entrances to finished floor line and/or highest duct centerline entrance to the roof. All manholes shall be built on, or placed over a 6” layer of well-tamped gravel.

B. Duct envelopes and conduit with bell ends shall enter at approximately right angles to the walls, except as may otherwise be shown on the Drawings.

C. All concrete work and fully assembled manholes shall be completely watertight and shall be furnished with sloped floors that pitch towards a sump pit. The outside surfaces shall be coated with an approved asphaltic waterproofing compound (all sides, bottom, and roof). Precast concrete manholes may be installed; however, all requirements of this section and other divisions of the Specifications and the details shown on the Drawings shall apply.

D. Install pulling eye irons imbedded in walls opposite each duct entrance securely fastened to manhole reinforcing rods. All hardware shall be hot-dipped galvanized steel. Copper bars shall be provided in the walls for grounding. No. 4/0 AWG bare copper cables shall be connected to these bars and all non-current carrying metal parts shall be grounded to these copper bars.

E. All cables shall be well supported on walls by nonmetallic cable racks. The cable racks shall be heavy-duty type for medium and low voltage power cables and light duty type for control, signal, communications and similar small conductors. All racks shall be rigidly attached to the wall and equipped with adjustable rack arms.

3.04 ELECTRIC HANDHOLES

A. Electric handholes shall be installed to a sufficient depth to accommodate the required grading of ducts as well as maintaining a minimum distance of 9” from the bottom of the lowest duct centerline entrances to finished floor line and/or highest duct centerline entrance to roof. All handholes shall be built on, or placed over a 6” layer of well-tamped gravel.

B. Duct envelopes and conduit with bell ends shall enter at approximately right angles to the walls, except as may otherwise be shown on the Drawings.

C. All fully assembled handholes shall be completely watertight.

D. All individual cables and/or bundles of conductors shall be identified and “dressed” along the wall of the enclosure. Cable racks as specified herein shall be provided if any handhole dimension exceeds 24 inches.

3.05 TESTING

A. All tests shall be performed in accordance with the requirements of the General Conditions and Division 1. The following tests are required:

1. Field tests

   a. Field tests for all completed duct systems shall consist of pulling a swab through each conduit followed by a mandrel equal in size to 85% of the conduit inside diameter.

   b. After testing, all conduits shall be capped after installation of a suitable pull rope. All field tests shall be witnessed by the Engineer.

- END OF SECTION -

SECTION 16123 – LOW VOLTAGE WIRE AND CABLE

PART 1 -- GENERAL

1.01 THE REQUIREMENT

A. The Contractor shall furnish, install, connect, test, and place in satisfactory operating condition, all low voltage wire and cable indicated on the Drawings and as specified herein and/or required for proper operation. The work of connecting cables to equipment and devices shall be considered a part of this Section. All appurtenances required for the installation of wire and cable systems shall be furnished and installed by the Contractor.

B. The scope of this Section does not include internal wiring factory installed by electrical equipment manufacturers.

C. Reference Section 16000 – Basic Electrical Requirements and Section 16130 – Boxes.

1.02 CODES AND STANDARDS

A. Low voltage wire, cable, and appurtenances shall be designed, manufactured, and/or listed to the following standards as applicable:

1. Underwriters Laboratories (UL)

   a. UL 13 – Standard for Power-Limited Circuit Cables

   b. UL 44 – Thermoset-Insulated Wires and Cables

   c. UL 83 – Thermoplastic-Insulated Wires and Cables

   d. UL 1277 – Standard for Electrical Power and Control Tray Cables with Optional Optical-Fiber Members

   e. UL 1581 – Reference Standard for Electrical Wires, Cables, and Flexible Cords

   f. UL 1685 – Standard for Vertical-Tray Fire-Propagation and Smoke-Release Test for Electrical and Optical-Fiber Cables

   g. UL 2250 – Standard for Instrumentation Tray Cable

   h. UL 2556 – Wire and Cable Test Methods

2. American Society for Testing and Materials (ASTM)

   a. ASTM B3 – Standard Specification for Soft or Annealed Copper Wire

   b. ASTM B8 – Standard Specification for Concentric-Lay-Stranded Copper Conductors, Hard, Medium-Hard, or Soft

   c. ASTM B33 – Standard Specification for Tin-Coated Soft or Annealed Copper Wire for Electrical Purposes

   d. ASTM D69 – Standard Test Methods for Friction Tapes

e. ASTM D4388 – Standard Specification for Nonmetallic Semi-Conducting and Electrically Insulating Rubber Tapes

3. Insulated Cable Engineers Association (ICEA)

a. ICEA S-58-679 – Standard for Control, Instrumentation and Thermocouple Extension Conductor Identification

b. ICEA T-29-250 – Conducting Vertical Cable Tray Flame Tests with Theoretical Heat Input Rate of 210,000 B.T.U./Hour

4. Institute of Electrical and Electronics Engineers (IEEE)

a. IEEE 1202 – Standard for Flame Testing of Cables

1.03 SUBMITTALS

A. In accordance with the procedures and requirements set forth in the General Conditions and Section 01300 – Submittals, the Contractor shall obtain from the wire and cable manufacturer and submit the following:

1. Shop Drawings

2. Reports of Field Tests

B. Each submittal shall be identified by the applicable specification section.

1.04 SHOP DRAWINGS

A. Each submittal shall be complete in all respects, incorporating all information and data listed herein and all additional information required for evaluation of the proposed material's compliance with the Contract Documents.

B. Partial, incomplete, or illegible Submittals will be returned to the Contractor without review for resubmittal.

C. Shop drawings shall include but not be limited to:

1. Product data sheets for wire and cable, terminations, and pulling lubricant.

2. Cable pulling calculations (if required).

3. Wiring identification methods and materials.

D. The shop drawing information shall be complete and organized in such a way that the Engineer can determine if the requirements of these specifications are being met. Copies of technical bulletins, technical data sheets from "soft-cover" catalogs, and similar information which is "highlighted" or somehow identifies the specific equipment items the Contractor intends to provide are acceptable and shall be submitted.

1.06 CABLE PULLING CALCULATIONS

A. Prior to the installation of the wire and cable specified herein, the Contractor shall submit cable pulling calculations for engineer review and approval when all of the following are true:

1. The amount of cable to be installed will be greater than 200 linear feet between pull points.

2. The installation will have one or more bends.

3. The wire and cable is size #1/0 AWG and larger.

B. Cable pulling calculations shall be performed by a currently registered professional engineer in the State of Florida and shall define pulling tension and sidewall loading (sidewall bearing pressure values).

PART 2 -- PRODUCTS

2.01 MANUFACTURERS

A. The wire and cable to be furnished and installed for this project shall be the product of manufacturers who have been in the business of manufacturing wire and cable for a minimum of ten (10) years. Wire and cable shall be designed, constructed, and installed in accordance with the best practices of the trade, and shall operate satisfactorily when installed as specified herein and indicated on the Drawings. Only one (1) manufacturer for each wire and cable type shall be permitted.

2.02 POWER AND CONTROL WIRE AND CABLE

A. Power wire installed between the output terminals of a VFD and the respective motor shall be shielded VFD cable as specified herein.

B. Power wire for all other loads and control wire shall consist of insulated copper conductors with a nylon (or equivalent) outer jacket. Conductor insulation shall be rated 90°C for wet or dry locations, and 600V. Insulated conductors shall be UL 44 Listed as NEC Type XHHW-2.

C. Unless specified otherwise herein, conductors shall be stranded copper per ASTM B-8 and B-3, with Class B or C stranding contingent upon the size. Power conductors for lighting and receptacle branch circuits shall be solid copper per ASTM B-3.

D. Power conductor size shall be no smaller than No. 12 AWG and Control conductor size shall be no smaller than No. 14 AWG.

E. Multi-conductor cable assemblies shall include a grounding conductor and an overall PVC jacket. The jacket shall be PVC and resistant to abrasion, sunlight, and flame in accordance with UL 1277. Multi-conductor cable assemblies shall be UL 1277 Listed as NEC Type TC (Power and Control Tray Cable).

F. Power wire and cable shall be as manufactured by the Okonite Company, the Southwire Company, General Cable, Encore Wire, or equal.

2.03 INSTRUMENTATION CABLE

A. For single-analog signal applications, instrumentation cable shall consist of a single, twisted pair or triad of individually insulated and jacketed copper conductors with an overall cable shield and jacket. Conductor insulation shall be rated 90°C in both wet and dry locations, and 600V. The jacket shall be PVC and resistant to abrasion, sunlight, and flame in accordance with UL 1277. Cable shall be UL 1277 Listed as NEC Type TC (Power and Control Tray Cable).

B. For multiple-analog signal applications, instrumentation cable shall consist of multiple, twisted pairs or triads (i.e. groups) of individually insulated and jacketed copper conductors with individual pair/triad shields (i.e. group shields) and an overall cable shield and jacket. Conductor insulation shall be rated 90°C in both wet and dry locations, and 600V. The jacket shall be PVC and resistant to abrasion, sunlight, and flame in accordance with UL 1277. Cable shall be UL 1277 Listed as NEC Type TC (Power and Control Tray Cable).

C. Cable and group shields shall consist of overlapped aluminum/polyester tape/foil providing 100% coverage. Instrumentation cables shall include an overall copper shield drain wire. Cables containing multiple twisted pairs or triads shall also include group shield drain wires.

D. Conductors, including drain wires, shall be tin or alloy coated (if available), soft, annealed copper, stranded per ASTM B-8, with Class B stranding unless otherwise specified.

E. Instrumentation signal conductor size shall be no smaller than No. 16 AWG.

F. Instrumentation cable shall be Okoseal-N Type P-OS (for single pair or triad applications) or Okoseal-N Type SP-OS (for multiple pair or triad applications) as manufactured by the Okonite Company, Belden equivalent, Southwire Company equivalent, or equal.

2.04 SHIELDED VFD CABLE

A. Where indicated on the Drawings, shielded VFD cable shall be installed between the output terminals of a VFD and the respective motor.

B. Shielded VFD cable shall consist of three (3) individually insulated copper phase conductors and three (3) bare copper grounding conductors with an overall cable shield and jacket, suitable for use with variable frequency drives. The phase conductors and ground conductors shall be symmetrically arranged within the cable assembly. Conductor insulation shall be rated 90°C in both wet and dry locations, and 2000V (2kV). Insulated conductors shall be UL Listed as NEC Type RHW-2 or XHHW-2. The jacket shall be PVC

and resistant to abrasion, sunlight, and flame in accordance with UL 1277. Cable shall be UL Listed as NEC Type TC-ER (Tray Cable for Exposed Runs).

C. Phase conductors shall be sized as shown on the Drawings. Ground conductors shall have a combined circular mil area equivalent to one phase conductor, minimum. Filler material shall be included in the cable assembly as necessary to make the cable round.

D. Cable shields shall consist of a helically applied bare copper tape with 50% overlap, minimum. For small conductor sizes where copper tape shields are not available, shields shall be permitted to consist of a layer of tin-coated copper braid covered by a layer of overlapped aluminum/polyester tape/foil. All cable shields shall provide 100% coverage.

E. Conductors shall be annealed, tinned, stranded copper per ASTM B3, B8, and B33.

F. Shielded VFD cable shall be as manufactured by Belden Wire and Cable, the Okonite Company, General Cable, Southwire, or AmerCable Inc.

2.05 CONDUCTOR IDENTIFICATION

A. Conductors shall be identified using a color coding method. Color coding for individual power, control, lighting, and receptacle conductors shall be as follows:

1. 480/277V AC Power

   a. Phase A - BROWN
   b. Phase B - ORANGE
   c. Phase C - YELLOW
   d. Neutral – GREY

2. 120/208V or 120/240V AC Power

   a. Phase A - BLACK
   b. Phase B - RED
   c. Phase C - BLUE
   d. Neutral - WHITE

3. DC Power

   a. Positive Lead - RED
   b. Negative Lead - BLACK

4. DC Control

   a. All wiring - BLUE

5. 120VAC Control

   a. 120 VAC control wire shall be RED except for a wire entering a motor control center compartment, motor controller, or control panel which is an

interlock. This interlock conductor shall be color coded YELLOW. For the purposes of this Section, an interlock is defined as any wiring that brings voltage into the above mentioned equipment from a source outside that equipment.

6. 24VAC Control

   a. All wiring - ORANGE

7. Equipment Grounding Conductor

   a. All wiring - GREEN

B. Individual conductors No. 2 AWG and smaller shall have factory color coded insulation. It is acceptable for individual conductors larger than No.2 AWG to be provided with factory color coded insulation as well, but it is not required. Individual conductors larger than No.2 AWG that are not provided with factory color coded insulation shall be identified by the use of colored tape in accordance with the requirements listed in Part 3 herein. Insulation colors and tape colors shall be in accordance with the color coding requirements listed above.

C. Conductors that are part of multi-conductor cable assemblies shall have black insulation. The conductor number shall be printed on each conductor's insulation in accordance with ICEA S-58-679, Method 4. Each conductor No.2 AWG and smaller within the cable assembly shall also be identified with a heat shrink tag with color coded background. Each conductor larger than No.2 AWG within the cable assembly shall also be identified by the use of colored tape. Heat shrink tags and colored tape shall be in accordance with the requirements listed in Part 3 herein. Tape color and heat shrink tag background color shall be in accordance with the color coding requirements listed above.

2.06 CABLE PULLING LUBRICANTS

A. Cable pulling lubricants shall be non-hardening type and approved for use on the type of cable installed. Lubricant shall be Yellow #77 Plus by Ideal, Cable Gel by Greenlee, Poly-Gel by Gardner Bender, or equal.

PART 3 -- EXECUTION

3.01 WIRE AND CABLE INSTALLATION

A. General

1. Wire and Cable shall be installed as specified herein and indicated on the Drawings. Unless specifically indicated otherwise on the Drawings, wire and cable shall be installed in separate raceways according to wiring type. For example, power wiring shall not be combined with control wiring, and control wiring shall not be combined with instrumentation wiring.

2. Wire shall be furnished and installed as single conductor cables, with limited exceptions. Multi-conductor cable assemblies shall only be installed where

indicated on the Drawings, required by the NEC, or after obtaining written permission from the Engineer.

3. Where instrumentation cables are installed in control panels, motor controllers, and other locations, the Contractor shall arrange wiring to provide maximum clearance between these cables and other conductors. Instrumentation cables shall not be installed in same bundle with conductors of other circuits.

4. Instrumentation cable shielding shall be continuous and shall be grounded at one point only.

B. Splices

1. Splices shall not be allowed in power or control wire and cable unless approved in writing by the Engineer. If unique field conditions exist or pulling calculations indicate that splices may be required, the Contractor shall submit a detailed request indicating why splices are required to the Engineer. The Engineer shall be under no obligation to grant such request.

2. Splicing materials shall be barrel type butt splice connectors and heat shrink tubing as manufactured by 3M, Ideal, or equal. The use of screw-on wire connectors (wire nuts) shall only be permitted for lighting and receptacle circuits.

3. No splicing of instrumentation cable is permitted.

C. Wire and Cable Sizes

1. The sizes of wire and cable shall be as indicated on the Drawings, or if not shown, as approved by the Engineer. If required due to field routing, the size of conductors and respective conduit shall be increased so that the voltage drop measured from source to load does not exceed 2-1/2%.

D. Additional Conductor Identification

1. In addition to the color coding identification requirements specified in Part 2 herein, individual conductors shall be provided with heat shrinkable identification tags. Identification tags for individual conductors shall have a white background where the conductor insulation is colored. Identification tags for individual conductors shall have a colored background where the conductor insulation is black. Background color shall match that of the taping provided on the individual black conductors.

2. Multi-conductor cables shall be provided with heat shrinkable identification tags in accordance with Part 2 herein.

3. All wiring shall be identified at each point of termination. This includes but is not limited to identification at the source, load, and in any intermediate junction boxes where a termination is made. The Contractor shall meet with the Owner and Engineer to come to an agreement regarding a wire identification system prior to installation of any wiring. Wire numbers shall not be duplicated.

4. Wire identification shall be by means of a heat shrinkable sleeve with appropriately colored background and black text. Wire sizes #14 AWG through #10 AWG shall have a minimum text size of 7 points. Wire sizes #8 AWG and larger shall have a minimum text size of 10 points. Sleeves shall be of appropriate length to fit the required text. The use of handwritten text for wire identification shall not be permitted.

5. 5Sleeves shall be suitable for the size of wire on which they are installed. Sleeves shall not be heat-shrunk onto control cables. Tags shall remain loose on cable to promote easier identification. For all other applications, sleeves shall be tightly affixed to the wire and shall not move. Sleeves shall be heat shrunk onto wiring with a heat gun approved for the application. Sleeves shall not be heated by any means which employs the use of an open flame. The Contractor shall take special care to ensure that the wiring insulation is not damaged during the heating process.

6. Sleeves shall be installed prior to the completion of the wiring terminations and shall be oriented so that they can be easily read.

7. Sleeves shall be polyolefin as manufactured by Brady, Seton, Panduit, or equal.

8. Wire identification in manholes, handholes, pull boxes, and other accessible components in the raceway system where the wiring is continuous (no terminations are made) shall be accomplished by means of a tag installed around the bundled group of individual conductors or around the outer conductor jacket of a multi-conductor cable. Identification shall utilize a FROM-TO system. Each group of conductors shall consist of all of the individual conductors in a single conduit or duct. The tag shall have text that identifies the bundle in accordance with the 'FROM' and 'TO' column for that particular conduit number in the conduit and wire schedule. Minimum text size shall be 10 point. The tag shall be affixed to the wire bundle by the use of nylon wire ties, and shall be made of polyethylene as manufactured by Brady, Seton, Panduit, or equal.

9. Where colored tape is used to identify cables, it shall be wrapped around the cable with a 25% overlap and shall cover at least 2 inches of the cable.

E. Wiring Supplies

1. Rubber insulating tape shall be in accordance with ASTM D4388. Friction tape shall be in accordance with ASTM D69.

F. Training of Cable in Manholes, Handholes, and Vaults

1. The Contractor shall furnish all labor and material required to train cables around cable vaults, manholes, and handholes. Sufficient length of cable shall be provided in each handhole, manhole, and vault so that the cable can be trained and racked in an approved manner. In training or racking, the radius of bend of any cable shall be not less than the manufacturer's recommendation. The training shall be done in such a manner as to minimize chaffing.

2. Instrumentation cable shall be racked and bundled separate from AC wiring to maintain the required separation as follows:

   a. 18 inches for 480/277VAC wiring

   b. 12 inches for 208/120VAC wiring

   c. 6 inches for 24VAC wiring

G. Conductor Terminations

1. Where wires are terminated at equipment which requires lugs, connections shall be made by solderless mechanical lug, crimp type ferrule, or irreversible compression type lugs. Reference individual equipment specification sections as applicable for additional termination requirements.

2. Where enclosure sizes and sizes of terminals at limit switches, solenoid valves, float switches, pressure switches, temperature switches, and other devices make terminations impractical due to the size of the field wiring, the Contractor shall terminate field wiring in an adjacent junction box per the requirements of Section 16130 – Boxes, complete with terminal strips. Contractor shall install the smaller wiring from the device to the junction box in a conduit, using the terminal strip as the means for joining the two different wire sizes. Splicing of wires in lieu of using terminal strips is not acceptable.

3. The cables shall be terminated in accordance with the cable and/or termination product manufacturer's instructions for the particular type of cable.

4. To minimize oxidation and corrosion, wire and cable shall be terminated using an oxide-inhibiting joint compound recommended for "copper-to-copper" connections. The compound shall be Penetrox E as manufactured by Burndy Electrical, or equal.

5. All spare conductors shall be terminated on terminal blocks mounted within equipment or junction boxes. Unless otherwise noted, coiling up of spare conductors within enclosure is not acceptable.

H. Pulling Temperature

1. Cable shall not be installed when the temperature of the jacket is such that damage will occur due to low temperature embrittlement. When cable will be pulled with an ambient temperature of 40°F or less within a three (3) day period prior to pulling, the cable reels shall be stored three (3) days prior to pulling in a protected storage area with an ambient temperature of 55°F or more. Cable pulling shall be completed during the work day for which the cable is removed from the protected storage. Any cable reels with wire remaining on them shall be returned to storage at the completion of the workday.

3.02 FIBER OPTIC CABLE INSTALLATION

A. The Contractor shall install the fiber optic cable furnished by the General Contractor and/or the Instrumentation and Control Subcontractor. The cable shall be installed in its

respective raceway system(s) as specified herein, indicated on the Drawings, and in accordance with the cable manufacturer's instructions. Reference Division 17 for additional information regarding the fiber optic cable.

3.03 TESTING

A. All testing shall be performed in accordance with the requirements of the General Conditions and Division 1. The following tests are required:

1. Shop Test

a. Wires and cables shall be tested in accordance with the applicable ICEA Standards. Wire and cable shall be physically and electrically tested in accordance with the manufacturer’s standards.

2. Field Tests

a. After installation, all wires and cables shall be tested for continuity. Testing for continuity shall be “test light” or “buzzer” style.

b. After installation, some wires and cables shall be tested for insulation levels. Insulation resistance between conductors of the same circuit and between conductor and ground shall be tested. Testing for insulation levels shall be as follows:

i. For #8 AWG and larger 600V wire and cable, apply 1,000 VDC from a Megohmmeter for one (1) minute . Resistance shall be no less than 100 Megohms. Insulation testing is not required for power and control cables smaller than #8 AWG.

ii. Instrumentation signal cable shall be tested from conductor to conductor, conductor to shield, and conductor to ground using a Simpson No. 260 volt-ohmmeter, or approved equal. The resistance value shall be 200 Megohms or greater.

B. Wires and cables shall be tested after required terminations are made, but before being connected to any equipment.

C. If tests reveal defects or deficiencies, the Contractor shall make the necessary repairs or shall replace the cable as directed by the Engineer, without additional cost to the Owner. All conductors of a multi-phase circuit shall be replaced if one conductor fails the required testing. If part of a multi-set (parallel conductors per phase) circuit fails testing, only the set containing failure shall be replaced.

D. All tests shall be made by and at the expense of the Contractor who shall supply all testing equipment. Test reports shall be submitted to the Engineer.

(EXHIBIT A) TEST DATA - MEGOHMS TEST NO. ____							
Date:			Company:				
Time:			Location:				
Circuit:	Circuit Length:	Aerial:	Duct:	Buried:	No. of Conductors	Size:	AWG MCM Shield:
Insulation Material:			Insulation Thickness:		Voltage Rating:		Age:
Type: _____Pothead _____Terminal					Location: Indoors_____ Outdoors_____		
Number and Type of Joints:							
Recent Operating History:							
Manufacturer:							
State if Potheads or Terminals were grounded during test:							
List associated equipment included in test:							
Miscellaneous Information:							

(EXHIBIT A)
TEST DATA - MEGOHMS
TEST NO. ____

Part Tested:	Test Performed: _____ Hours/Days: _____ After Shutdown: _____
Grounding Time:	Dry Bulb Temperature: _____ Wet Bulb Temperature: _____
Test Voltage:	Equipment Temperature: _____ How Obtained: _____ Relative Humidity: _____ Absolute Humidity: _____ Dew Point: _____

Megohmmeter: Serial Number: _____ Range: _____
Voltage: _____ Calibration Date: _____

Test Connections	To Line To Earth To Ground	To Line To Earth To Ground	To Line To Earth To Ground	Test Connections	To Line To Earth To Ground	To Line To Earth To Ground	To Line To Earth To Ground
1/4 Minute				5 Minutes			
1/2 Minute				6 Minutes			
3/4 Minute				7 Minutes			
1 Minute				8 Minutes			
2 Minutes				9 Minutes			
3 Minutes				10 Minutes			
4 Minutes				10/1 Minute Ratio			

Remarks:

- END OF SECTION -

SECTION 16130 – BOXES

PART 1 -- GENERAL

1.01 THE REQUIREMENT

A. The scope of work under this Section includes furnishing and installing all pull boxes, junction boxes, and outlet boxes.

B. Requirements for other boxes and enclosures are not included in this Section. Reference each specific Division 16 equipment Section for requirements related to that equipment's respective enclosure.

C. Reference Section 16000, Basic Electrical Requirements, and Section 16111, Conduit.

1.02 CODES AND STANDARDS

A. Boxes shall be designed, manufactured, and/or listed to the following standards as applicable:

1. UL 514A - Metallic Outlet Boxes

2. UL 514C - Standard for Non-metallic Outlet Boxes, Flush Device Boxes, and Covers

3. UL 50 – Enclosures for Electrical Equipment, Non-environmental Considerations

4. UL 50E - Enclosures for Electrical Equipment, Environmental Considerations

5. UL 1203 – Standard for Explosion-proof and Dust-ignition-proof Electrical Equipment for use in Hazardous (Classified) Locations.

6. NEMA 250 – Enclosures for Electrical Equipment

1.03 SUBMITTALS

A. In accordance with the procedures and requirements set forth in the General Conditions and Section 01300, Submittals, the Contractor shall obtain from the equipment manufacturer(s) and submit the following:

B. Shop Drawings

C. Each submittal shall be identified by the applicable specification section.

1.04 SHOP DRAWINGS

A. Each submittal shall be complete in all respects, incorporating all information and data listed herein and all additional information required for evaluation of the proposed equipment's compliance with the Contract Documents.

B. Partial, incomplete or illegible Submittals will be returned to the Contractor without review for resubmittal.

C. Shop drawings shall include but not be limited to:

1. Product data sheets for boxes, terminal strips, and all accessories

2. Overall bill of material for all boxes included under this Contract to summarize exactly what is being submitted for review. Bill of material shall at a minimum show each box type (i.e. pull, junction, or outlet), quantity, material of construction, dimensions, and proposed installation location.

1.05 OPERATION AND MAINTENANCE MANUALS

A. The Contractor shall submit operation and maintenance manuals in accordance with the procedures and requirements set forth in the General Conditions and Division 1.

B. As-built drawings showing dimensions, internal box layout, terminal strip information, and terminal strip identification information shall be provided for all junction boxes. As-built drawings are not required for pull boxes or outlet boxes.

1.06 IDENTIFICATION

A. Each pull and junction box shall be identified with the box name as indicated on the Contract Drawings (e.g. PPB-XXX, CJB-YYY) or as directed by the Engineer. A nameplate shall be securely affixed in a conspicuous place on each box. Nameplates shall be as specified in Section 16195, Electrical – Identification.

PART 2 -- PRODUCTS

2.01 MANUFACTURERS

A. The equipment covered by this Specification is intended to be standard equipment of proven performance as manufactured by reputable concerns. Equipment shall be designed, constructed, and installed in accordance with the best practices of the trade, and shall operate satisfactorily when installed as shown on the Drawings.

2.02 PULL AND JUNCTION BOXES

A. General

1. All pull and junction boxes shall be UL listed and labeled.

2. Pull and junction boxes shall not be provided with eccentric or concentric knockouts.

3. Pull and junction boxes mounted embedded in concrete shall be UL listed for embedment.

4. Where metallic boxes are used they shall be of all welded construction. Tack welded boxes are not acceptable.

B. Pull Boxes

1. All pull boxes shall be provided with a matching gasketed cover. For covers with dimensions of 24 inches by 24 inches or less, the cover shall be held in place by machine screws. Other screw types are not acceptable. For covers with dimensions greater than 24 inches by 24 inches, the cover shall be hinged and held in place by screw-operated clamp mechanisms. Hinge pins shall be removable. Clamp mechanism material of construction shall match that of the associated box.

2. Pull boxes shall not have any wire terminations inside, other than those for grounding/bonding. A ground bar shall be provided with the necessary number of screw type terminals. Twenty (20) percent of the total amount of terminals otherwise required for the pull box (minimum of two) shall be provided as spare terminations. Boxes requiring any other wire terminations shall be furnished and installed in accordance with the requirements for junction boxes herein.

3. Pull boxes shall be 6 inches wide by 6 inches tall by 4 inches deep, minimum. For applications requiring larger boxes, the box shall be sized in accordance with the fill requirements and dimensional requirements of the NEC.

4. Barriers shall be provided in pull boxes to isolate conductors of different voltages, types, and functions. Barrier material of construction shall match that of the box. Isolation shall be provided between the following groups:

   a. Power wiring

   b. AC control wiring

   c. DC control wiring

   d. Instrumentation wiring

C. Junction Boxes

1. Junction boxes used for lighting and receptacle circuits only shall be provided with a matching gasketed cover held in place by machine screws. Other screw types are not acceptable.

2. Junction boxes for all uses other than lighting and receptacle circuits shall be provided with a hinged, gasketed cover. Hinge pins shall be removable. Cover shall be held in place by screw-operated clamp mechanisms. Clamp mechanism material of construction shall match that of the associated box.

3. Barriers shall be provided in junction boxes to isolate conductors and terminal blocks of different voltages, types, and functions. Barrier material of construction shall match that of the box. Isolation shall be provided between the following groups:

   a. Power wiring

   b. AC control wiring

   c. DC control wiring

   d. Instrumentation wiring

4. Junction boxes used for lighting and receptacle circuits only shall be allowed to have screw-on (wire nut) type connectors for wire terminations/junctions.

5. Junction boxes for all uses other than lighting and receptacle circuits shall be provided with terminal strips, consisting the necessary number of screw type terminals. Current carrying parts of the terminal blocks shall be of ample capacity to carry the full load current of the circuits connected, with a 10A minimum capacity. Terminal strips shall be rated for the voltage of the circuits connected. A separate ground bar shall be provided with the necessary number of screw type terminals. Twenty (20) percent of the total amount of terminals otherwise required for the junction box (minimum of two) shall be provided as spare terminations. When barriers are provided within the box, separate terminal strips shall be provided in each barrier area. Terminals shall be lettered and/or numbered to conform to the wiring labeling scheme in place on the project.

6. Junction boxes shall be 6 inches wide by 6 inches tall by 4 inches deep, minimum. For applications requiring larger boxes, the box shall be sized in accordance with the fill requirements and dimensional requirements of the NEC. Terminal blocks (including spare terminals) shall be considered when sizing the junction box.

D. Enclosure Types and Materials

1. In non-hazardous locations, pull and junction boxes shall be furnished with the following enclosure type and material of construction, dependent upon the designation of the area in which they are to be installed. Area designations are indicated on the Drawings.

AREA DESIGNATION	**ENCLOSURE TYPE AND MATERIAL**
Indoor Wet Process Area	NEMA 4X, Type 304 Stainless Steel
Indoor Dry Process Area	NEMA 12, Painted Steel
Indoor Dry Non-process Area	NEMA 1, Painted Steel
Indoor Type 1 Chemical Storage/Transfer Area	NEMA 4X, Fiberglass or PVC
Indoor Type 2 Chemical Storage/Transfer Area	NEMA 4X, Type 304 Stainless Steel
All Outdoor Areas	NEMA 4X, Type 304 Stainless Steel

2.03 OUTLET BOXES

A. General

1. Outlet boxes shall be provided with a trim appropriate for the wiring device installed inside. Reference Section 16141, Wiring Devices, for outlet box trim requirements. An appropriate outlet box trim is required to achieve the NEMA rating of the outlet boxes as specified herein.

B. Surface Mount Outlet Boxes

1. Outlet boxes shall be the deep type, no less than 2.5 inches deep.

2. Outlet boxes shall be provided in single or multi-gang configuration as required, sized in accordance with the requirements of the NEC.

3. In non-hazardous locations, outlet boxes shall be furnished with the following enclosure type and material of construction, dependent upon the designation of the area in which they are to be installed. Area designations are indicated on the Drawings.

AREA DESIGNATION	**ENCLOSURE TYPE AND MATERIAL**
Indoor Wet Process Area	NEMA 4X, Cast Aluminum
Indoor Dry Process Area	NEMA 1, Cast Aluminum
Indoor Dry Non-process Area	NEMA 1, Cast Aluminum
Indoor Type 1 Chemical Storage/Transfer Area	NEMA 4X, PVC
Indoor Type 2 Chemical Storage/Transfer Area	NEMA 4X, Cast Aluminum
All Outdoor Areas	NEMA 4X, Cast Aluminum

4. Outlet boxes shall be provided with integral threaded conduit hubs mounted external to the box. Boxes with threaded conduit hubs mounted internal to the box or as a part of the box wall are not acceptable.

C. Flush Mount Outlet Boxes

1. Outlet boxes shall be no less than 2-1/8 inches deep, and 4-11/16 inches square. Boxes shall be UL listed and labeled. Pre-punched single diameter conduit knockouts are acceptable, however, concentric and eccentric knockouts are not acceptable.

2. Outlet boxes mounted flush in CMU walls shall be made of galvanized, tack welded steel, and suitable for installation in masonry walls. Sectional type boxes are not acceptable for this application.

3. Outlet boxes mounted flush in gypsum walls shall be made of galvanized pressed steel. Tack welded boxes are not acceptable for this application. Sectional type boxes are not acceptable for this application.

4. Outlet boxes mounted cast into concrete shall be concrete tight, and shall be made of galvanized steel or PVC.

PART 3 -- EXECUTION

3.01 INSTALLATION

A. Pull and Junction Boxes

1. Pull boxes and junction boxes shall be solidly attached to structural members prior to installation of conduit and set true and plumb. Boxes shall not be supported by their associated conduits.

2. Wooden plugs are not permitted for securing boxes to concrete. Appropriately rated anchors specifically suited for use in concrete shall be used.

3. Box penetrations for conduits shall be made with a punch tool, and penetrations shall be of the size required for the conduit entry and/or hub. Oversized penetrations in boxes are not acceptable.

4. Watertight conduit hubs shall be provided for boxes where a NEMA 4X enclosure rating is specified. Reference Section 16111, Conduit, for conduit hub requirements.

5. Pull and junction boxes may be installed flush mounted in gypsum, concrete or CMU walls where appropriate provided that covers are easily removed or opened.

6. Pull and junction boxes shall be provided in the enclosure type and material of construction required for the area in which it is installed. Reference the requirements in Part 2 herein, and the area designations indicated on the Drawings.

B. Outlet Boxes

1. Outlet boxes shall be solidly attached to structural members prior to installation of conduit and set true and plumb. Boxes shall not be supported by their associated conduits.

2. Wooden plugs are not permitted for securing boxes to concrete. Appropriately rated anchors specifically suited for use in concrete shall be used.

3. Flush mounted outlet boxes shall be arranged and located so that tile and grout lines fit closely around the boxes, and so placed that the cover or device plate shall fit flush to the finished wall surface.

4. Outlet boxes shall be flush mounted in finished areas and other areas where practical. Flush mounted outlet boxes shall not be installed in hazardous areas and type 1 or 2 chemical storage/transfer areas.

5. For the below-named items, mounting heights from finished floor, or finished grade to top is applicable, depending on the type of wiring device to be installed in the outlet box. Mounting heights for outlet boxes shall be as follows, unless otherwise specified herein, indicated on the Drawings, or required by the Americans with Disability Act (ADA):

   a. Light switches and wall mounted occupancy sensors, 48 inches

   b. Receptacles in indoor dry process/non-process areas, 16 inches

   c. Receptacles in indoor wet process areas and all indoor chemical storage/transfer areas, 48 inches

   d. Receptacles in outdoor locations, 24 inches

6. Outlet boxes shall be provided in the material of construction required for the area in which it is installed. Reference the requirements in Part 2 herein, and the area designations indicated on the Drawings.

- END OF SECTION -

SECTION 16141 - WIRING DEVICES

PART 1 -- GENERAL

1.01 THE REQUIREMENT

A. The Contractor shall furnish and install all switches, occupancy sensors, and receptacles of the type and at the locations as shown on the Drawings.

B. All switches and receptacles shall be furnished and installed in outlet boxes. Reference Section 16130, Boxes, for outlet box requirements.

C. Reference Section 16000, Basic Electrical Requirements, and Section 16123, Low Voltage Wire and Cable.

1.02 CODES AND STANDARDS

A. Wiring devices shall be designed, manufactured, and/or listed to the following standards as applicable:

1. UL 20 – General Use Snap Switches

2. UL 498 – Standard for Attachment Plugs and Receptacles

3. UL 943 – Ground Fault Circuit Interrupters

4. UL 1203 – Standard for Explosion-proof and Dust-ignition-proof Electrical Equipment for use in Hazardous (Classified) Locations.

1.03 SUBMITTALS

A. In accordance with the procedures and requirements set forth in the General Conditions and Section 01300, Submittals, the Contractor shall obtain from the equipment manufacturer and submit shop drawings. Each submittal shall be identified by the applicable specification section.

1.04 SHOP DRAWINGS

A. Each submittal shall be complete in all respects, incorporating all information and data listed herein and all additional information required for evaluation of the proposed equipment's compliance with the Contract Documents.

B. Partial, incomplete, or illegible submittals will be returned to the Contractor without review for resubmittal.

C. Shop drawings shall include, but not be limited to:

1. Product data sheets.

1.05 SPARE PARTS

A. The Contractor shall furnish 10% (minimum of 1) spare of each receptacle, switch, and plug furnished and installed for this project.

B. Spare parts lists, included with the shop drawing submittal, shall indicate specific sizes, quantities, and part numbers of the items to be furnished. Terms such as "1 lot of packing material" are not acceptable.

C. Parts shall be completely identified with a numerical system to facilitate parts inventory control and stocking. Each part shall be properly identified by a separate number. Those parts which are identical for more than one size shall have the same parts number.

1.06 IDENTIFICATION

A. Each switch and receptacle shall be identified with the equipment item number, manufacturer's name or trademark, and such other information as the manufacturer may consider necessary, or as specified, for complete identification.

PART 2 -- PRODUCTS

2.01 MANUFACTURERS

A. The equipment covered by these Specifications is intended to be standard equipment of proven performance as manufactured by reputable concerns. Equipment shall be designed, constructed and installed in accordance with the best practices of the trade, and shall operate satisfactorily when installed as shown on the Drawings.

B. The Contractor shall use the products of a single manufacturer for each type of wiring device.

C. The Contractor shall use the products of a single manufacturer for all device plates. Plate variations are allowed for the following devices:

1. Where the selected plate manufacturer does not manufacture a suitable finish plate.

2. For heavy-duty receptacles rated at more than 30A.

3. Where non-standard plates are required, specified, or shown.

D. The Contractor shall furnish and install all wiring devices and device plates.

E. In non-hazardous areas, provide specification grade devices manufactured by Appleton, Crouse-Hinds, Leviton, Hubbell, Pass & Seymour, or Engineer approved equal.

F. In hazardous areas, provide devices manufactured by Appleton, Cooper Crouse-Hinds, Hubbell-Killark, or Engineer approved equal.

2.02 WIRING DEVICES

A. Wall switches for non-hazardous areas shall be rated for the current required to suit the application, but not less than 20A. Double pole, three-way, and four-way switches shall be provided where indicated on the Drawings, and as required. Switches shall be rated for 120-277VAC, and shall be UL 20 Listed.

B. Convenience receptacles for non-hazardous areas shall be rated for 20A at 125VAC. Convenience receptacles shall be UL 498 Listed. Tamper resistant receptacles are not acceptable.

C. Special purpose receptacles (welders, lab equipment, etc.) shall be provided with the proper NEMA configuration and ampacity as indicated on the Drawings. The coordinating plug for each special purpose receptacle shall be provided with the equipment which it is serving.

D. Ground fault circuit interrupter receptacles shall be rated for 20A at 125VAC. Ground fault circuit interrupter receptacles shall be UL 943 Listed. Tamper resistant receptacles are not acceptable.

E. Wall switches for hazardous areas shall be the factory sealed type, UL 1203 Listed for use in the hazardous area. Wall switches shall be rated for 120-277VAC, and shall be rated for the current required to suit the application, but not less than 20A

F. Receptacles for hazardous areas shall be rated 20A at 120-240VAC. Receptacles shall be UL 1203 listed for use in the hazardous area, utilizing delayed-action construction.

G. All wiring devices shall be approved for use with stranded conductors, if stranded conductors are to be used with the device. Reference Section 16123, Low Voltage Wire and Cable for conductor requirements

2.03 DEVICE PLATES

A. Device plates for indoor flush-mounted receptacles and switches shall be made of Type 304 stainless steel, not less than 0.032 of an inch thick, with beveled edges and milled on the rear so as to lie flat against the wall. Devices plates shall be provided with a gasket.

B. Device plates for outdoor installations, indoor wet process areas, and chemical storage/transfer areas shall be Appleton Type FSK, Crouse-Hinds #DS185, or equal for wall switches. Device plates for receptacles shall be “in-use” style. “In-use” weatherproof covers shall be rugged, minimum 3 ¼” depth, die-cast aluminum as manufactured by Thomas & Betts "Red Dot," Intermatic International, Inc., or equal.

C. Device plates for indoor dry process and non-process areas with surface mounted boxes shall be Crouse-Hinds DS32, or equal for switches, and Crouse-Hinds DS23 or equal for receptacles.

2.04 PLUGS

A. The Contractor shall furnish suitable plugs with equipment furnished under the respective specification Section. Plugs shall be black rubber or plastic. For waterproof receptacles, the plugs shall be similar in construction to the receptacles and shall be encased in corrosion resistant yellow housing provided with clamping nuts and stuffing gland cable outlets.

2.05 PROCESS INSTRUMENTS

A. The Contractor shall furnish and install a local disconnect switch at each process instrument (e.g., level transmitter, flow transmitter, analytical instrument etc.,) to disconnect the 120VAC power supply to the instrument. The device shall be a NSSC series manual motor starting switch without overload protection as manufactured by Crouse-Hinds, Appleton equivalent, or equal. For hazardous locations, the device shall be UL 1203 Listed.

PART 3 -- EXECUTION

3.01 INSTALLATION

A. Where more than one (1) switch occurs at one (1) location, gang plates shall be used.

B. All device plates shall be set true and plumb, and shall fit tightly against the finished wall surfaces and outlet boxes.

C. Wiring device box (outlet box) mounting heights shall be as specified in Section 16130, Boxes.

D. When indicated height would place any of the equipment at an unsuitable location such as at a molding or break in wall finish, the Contractor shall bring it to the attention of the Engineer for a decision.

E. Receptacles installed in toilet, locker, and bathrooms, and within 6 feet of a sink, shall be of ground fault interrupter type. Ground fault circuit interrupter receptacles shall also be furnished and installed in additional locations where indicated on the Drawings, and as required by the NEC.

F. All receptacles shall have a self-adhesive label installed on the top at the respective device plate that indicates which panel and which circuit number the receptacle is supplied from. Labels shall have a white background and black lettering in 14 point font.

3.02 CIRCUITING

A. Convenience receptacles shall be grouped on circuits separate from the lighting circuits. A maximum of eight (8) convenience receptacles are permitted per 20A, 120V circuit, unless otherwise indicated on the Drawings.

- END OF SECTION -

SECTION 16170 – GROUNDING AND BONDING

PART 1 -- GENERAL

1.01 THE REQUIREMENT

A. The Contractor shall furnish and install grounding systems complete in accordance with the minimum requirements established by Article 250 of the NEC. Article 250 of the NEC shall be considered a minimum requirement for compliance with this Specification.

B. Grounding of all instrumentation and control systems shall be furnished and installed in accordance with the manufacturer/system requirements and IEEE 1100. Conflicts shall be promptly brought to the attention of the Engineer.

C. In addition to the NEC requirements, building structural steel columns shall be permanently and effectively grounded:

D. Reference Section 16000, Basic Electrical Requirements

1.02 CODES AND STANDARDS

A. Equipment and materials covered under this Section shall be designed, manufactured, and/or listed to the following standards as applicable:

1. UL 467 – Grounding and Bonding Equipment

2. IEEE 81 – Guide for Measuring Earth Resistivity, Ground Impedance, and Earth Surface Potentials of a Ground System.

3. IEEE 1100 – Recommended Practice for Power and Grounding Electronic Equipment

1.03 SUBMITTALS

A. In accordance with the procedures and requirements set forth in the General Conditions and Section 01300, Submittals, the Contractor shall obtain from the equipment manufacturer and submit the following:

1. Shop Drawings

2. Reports of certified field tests.

B. Each submittal shall be identified by the applicable specification section.

1.04 SHOP DRAWINGS

A. Each submittal shall be complete in all respects, incorporating all information and data listed herein and all additional information required for evaluation of the proposed equipment's compliance with the Contract Documents.

B. Partial, incomplete, or illegible submittals will be returned to the Contractor without review for resubmittal.

C. Shop drawings shall include but not be limited to:

1. Product data sheets.

2. Drawings and written description of how the Contractor intends to furnish and install the grounding system.

PART 2 -- PRODUCTS

2.01 MANUFACTURERS

A. The equipment covered by these specifications shall be standard equipment of proven performance as manufactured by reputable concerns. Equipment shall be designed, constructed, and installed in accordance with the best practices of the trade, and shall operate satisfactorily when installed as shown on the Drawings.

2.02 GROUND RODS AND GRID

A. Ground rods shall be rolled to a commercially round shape from a welded copper-clad steel manufactured by the molten-welding process or by the electro-formed process (molecularly bonded). They shall have an ultimate tensile strength of 75,000 pounds per square inch (psi) and an elastic limit of 49,000 psi. The rods shall be not less than 3/4 inch in diameter by 10 feet in length; and the proportion of copper shall be uniform throughout the length of the rod. The copper shall have a minimum wall thickness of 0.010 inch at any point on the rod. Ground rods shall be UL 467 listed. The ground rods shall be manufactured by Erico Products, Blackburn, or equal.

B. Except where specifically indicated otherwise, all exposed non current-carrying metallic parts of electrical equipment, metallic raceway systems, grounding conductors in nonmetallic raceways and neutral conductors of wiring systems shall be grounded.

C. The ground connection shall be made at the main service equipment and shall be extended to the ground grid surrounding the structure. The ground grid shall also be connected to the point of entrance of the metallic water service. Connection to the water pipe shall be made by a suitable ground clamp or lug connection to a plugged tee. If flanged pipes are encountered, connection shall be made with the lug bolted to the street side of the flanged connection.

D. Where ground fault protection is employed, care shall be taken so that the connection of the ground and neutral does not interfere with the correct operation of the ground fault protection system.

2.03 FITTINGS

A. Grounding connections to equipment shall be bolted. Cable end connections shall be made by hydraulic crimp or exothermically welded. Split bolt type connectors are not acceptable. Fittings shall be UL 467 listed.

2.04 EQUIPMENT GROUNDING CONDUCTORS

A. An insulated equipment grounding conductor, which shall be separate from the electrical system neutral conductor, shall be furnished and installed for all circuits. Insulation shall be of the same type as the ungrounded conductors in the raceway and shall be green in color. Equipment grounding conductors shall be furnished and installed in all conduits. Use of conduits as the NEC required equipment grounding conductor is not acceptable.

2.05 EQUIPMENT GROUNDS

A. Equipment grounds shall be solid and continuous from a connection at earth to all distribution panelboards. Ground connections at panelboards, outlets, equipment, and apparatus shall be made in an approved and permanent manner.

B. For all control panels, disconnect switches, and other electrical enclosures, equipment grounds and bonding jumpers shall be terminated individually on a ground bar or mechanical lugs. No wire nuts will be permitted.

2.06 EXOTHERMIC WELDS

A. All exothermic welding shall be completed per welding kit manufacturer's instructions. Exothermic welds shall be CadWeld by Erico or ThermoWeld.

PART 3 -- EXECUTION

3.01 INSTALLATION

A. Metal surfaces where grounding connections are to be made shall be clean and dry. Steel surfaces shall be ground or filed to remove all scale, rust, grease, and dirt. Copper and galvanized steel shall be cleaned with emery cloth to remove oxide before making connections.

B. Ground Grid

1. A main ground grid shall be provided for each structure and interconnecting structure grids consisting of driven ground rods as shown on the Drawings. Ground rods shall be driven straight down into the earth, or if objects are encountered, at an angle to avoid the obstruction.

2. The ground rods shall be interconnected by the use of copper cable exothermically welded to the rods. The grounding cables shall be installed after the excavations for the building have been completed and prior to the pouring of concrete for the footings, mats, etc. Copper "pigtails" shall be connected to the ground grid and shall enter the buildings and structure from the outside and shall be connected to

steel structures, and equipment as described in this Section and as required to provide a complete grounding system. The copper pigtails shall be exothermically welded to the ground grid, and connected to building reinforcement steel by hydraulic crimp.

3. Grounding conductors shall be continuous between points of connection; splices shall not be permitted.

4. Where conductors are exposed and subject to damage from personnel, traffic, etc., conductors shall be installed in metal raceway. The raceway shall be bonded to the grounding system.

5. Where subsurface conditions do not permit use of driven ground rods to obtain proper ground resistance, rods shall be installed in a trench or plate electrodes shall be provided, as applicable and necessary to obtain proper values of resistance.

6. Buried exothermic welds and ground ring shall not be backfilled until inspected by Engineer.

C. Raceways

1. Conduit which enters equipment such as switchgear, motor control centers, transformers, panelboards, variable frequency drives, instrument and control panels, and similar equipment shall be bonded to the ground bus or ground lug, where provided, and as otherwise required by the NEC.

3.02 TESTING

A. All tests shall be performed in accordance with the requirements of the General Conditions and Division 1. The following tests are required:

1. Witnessed Shop Tests

a. None required.

2. Field Tests

a. Field testing shall be done in accordance with the requirements specified in the General Conditions, Division 1, and NETA Acceptance Testing Specifications, latest edition.

b. Fall of potential tests shall be performed on the ground grid per IEEE81 recommendations by a third party, independent testing firm. A fall of potential plot shall be submitted at the conclusion of testing for Engineer review. Documentation indicating the location of the rod and grounding system as well as the resistance and soil conditions at the time the measurements were made shall be submitted. Testing shall show that the ground grid has 5 ohms resistance or less. Due to soil conditions and/or unforeseen field conditions, ground resistances greater than 5 ohms may be acceptable if specifically approved in writing by the Engineer. Ground resistance measurements shall be made in normally dry weather not less

than 48 hours after rainfall and with the ground grid under test isolated from other grounds.

c. Continuity tests for the grounding electrode conductor shall be performed. Test will be accepted when a resistance of less than 1 ohm is shown for this conductor.

- END OF SECTION -

SECTION 16190 - SUPPORTING DEVICES

PART 1 -- GENERAL

1.01 THE REQUIREMENT

A. The Contractor shall furnish and install structural supports for mounting and installing all conduit, electrical equipment, lighting, alarm systems, instrumentation, and communications equipment furnished under this Contract.

B. Equipment shall be installed strictly in accordance with recommendations of the manufacturer and best practices of the trade resulting in a complete, operable, and safe installation. The Contractor shall obtain written installation manuals from the equipment manufacturer prior to installation.

C. Reference Section 16000, Basic Electrical Requirements.

1.02 CODES AND STANDARDS

A. Equipment and materials covered under this Section shall be designed, manufactured, and/or listed to the following standards as applicable:

1. ASTM A123 – Standard Specification for Zinc (Hot Dip Galvanized) Coatings on Iron and Steel Products.

2. ASTM A153 – Standard Specification for Zinc Coating (Hot Dip) on Iron and Steel Hardware.

3. ASTM A240 – Standard Specification for Chromium and Chromium-Nickel Stainless Steel Plate, Sheet, and Strip for Pressure Vessels and for General Applications.

4. ASTM A276 – Standard Specification for Steel Bars and Shapes

5. ASTM B783 – Standard Specification for Materials for Ferrous Powder Metallurgy Structural Parts

1.03 SUBMITTALS

A. In accordance with the procedures and requirements set forth in the General Conditions and Section 01300, Submittals, the Contractor shall obtain from the equipment manufacturer and submit the following:

1. Shop drawings

2. Structural support calculations (if required)

B. Each submittal shall be identified by the applicable Specification section.

1.04 SHOP DRAWINGS

A. Each submittal shall be complete in all respects, incorporating all information and data listed herein and all additional information required for evaluation of the proposed equipment's compliance with the Contract Documents.

B. Partial, incomplete, or illegible submittals will be returned to the Contractor without review for resubmittal.

C. Shop drawings shall include but not be limited to:

1. Product data sheets.

2. Complete assembly, layout, installation, and foundation drawings with clearly marked dimensions.

PART 2 -- PRODUCTS

2.01 MANUFACTURERS

A. The equipment covered by this Specification is intended to be standard equipment of proven performance as manufactured by reputable concerns. Equipment shall be designed, constructed, and installed in accordance with the best practices of the trade, and shall operate satisfactorily when installed as shown on the Drawings.

2.02 MATERIALS

A. Support channel shall be 1-5/8” by 1-5/8” minimum, with 12 gage material thickness.

B. Support channel, support channel fittings, and threaded rod shall be furnished with the following material of construction, dependent upon the designation of the area in which they are to be installed. Area designations are indicated on the Drawings.

AREA DESIGNATION	**MATERIAL OF CONSTRUCTION**
Indoor Wet Process Area	Type 304 Stainless Steel
Indoor Dry Process Area	Hot Dipped Galvanized Steel
Indoor Dry Non-process Area	Hot Dipped Galvanized Steel
Indoor Type 1 Chemical Storage/Transfer Area	Fiberglass
Indoor Type 2 Chemical Storage/Transfer Area	Type 304 Stainless Steel
All Outdoor Areas	Type 304 Stainless Steel
All Hazardous Areas	Type 304 Stainless Steel

C. Fastening hardware (bolts, nuts, washers, and screws) shall be furnished with the following material of construction, dependent upon the designation of the area in which they are to be installed. Area designations are indicated on the Drawings.

AREA DESIGNATION	MATERIAL OF CONSTRUCTION
Indoor Wet Process Area	Type 304 Stainless Steel
Indoor Dry Process Area	Type 304 Stainless Steel
Indoor Dry Non-process Area	Type 304 Stainless Steel
Indoor Type 1 Chemical Storage/Transfer Area	Fiberglass
Indoor Type 2 Chemical Storage/Transfer Area	Type 304 Stainless Steel
All Outdoor Areas	Type 304 Stainless Steel
All Hazardous Areas	Type 304 Stainless Steel

PART 3 -- EXECUTION

3.01 INSTALLATION

A. Concrete or Masonry Inserts

1. The Contractor shall be responsible for the furnishing and installation of all anchor bolts, masonry inserts, and similar devices required for installation of equipment furnished under this Contract.

2. If a time delay for the arrival of any special inserts or equipment drawings, etc. occurs, the Contractor may, if permitted by the Engineer, make arrangements for providing approved recesses and openings in the concrete or masonry and, upon subsequent installation, the Contractor shall be responsible for filling in such recesses and openings. Any additional costs that may be incurred by this procedure shall be borne by the Contractor.

3. The Contractor shall furnish leveling channels for all switchgear, switchboards, motor control centers, and similar floor mounted equipment. The leveling channels shall be provided for embedment in the equipment housekeeping pads. Coordination of the installation of these channels with the concrete pad is essential and required. Pad height shall be as required to maintain concrete coverage of the reinforcement bars while not causing associated equipment to exceed the maximum mounting height requirements of the NEC.

B. Support Fastening and Locations

1. All equipment fastenings to columns, steel beams, and trusses shall be by beam clamps or welded. No holes shall be drilled in the steel.

2. All holes made in reflected ceilings for support rods, conduits, and other equipment shall be made adjacent to ceiling grid bars where possible, to facilitate removal of ceiling panels.

3. Support channel shall be provided wherever required for the support of starters, switches, panels, and miscellaneous equipment.

4. All equipment, devices, and raceways that are installed on the dry side of a water bearing wall shall not be installed directly onto the wall. Support channel shall be used to allow ventilation air to pass behind the equipment, devices, or raceway.

5. All supports shall be rigidly bolted together and braced to make a substantial supporting framework. Where possible, control equipment shall be grouped together and mounted on a single framework.

6. Aluminum support members shall not be installed in direct contact with concrete. Stainless steel or non-metallic "spacers" shall be used to prevent contact of aluminum with concrete.

7. Actual designs for supporting framework should take the nature of a picture frame of support channels and bracket with a plate for mounting the components. The Contractor is responsible for the design of supporting structure; he shall submit design details to the Engineer for acceptance before proceeding with the fabrication.

8. Wherever dissimilar metals come into contact, the Contractor shall isolate these metals as required with neoprene washers, nine (9) mil polyethylene tape, or gaskets.

9. For all installations where fiberglass supporting materials are required, the Contractor shall submit structural calculations and the details of the proposed system of support. Structural calculations shall be signed and sealed by a registered professional engineer in the State of Florida.

10. For the following installations where conduits are provided with a support system suspended from the above or attached to a vertical structure, the Contractor shall submit structural calculations and details of the proposed system of support. Structural calculations shall be signed and sealed by a registered professional engineer in the State of Florida.

    a. A quantity of twelve (12) or more conduits trade size 1” and smaller are proposed for a conduit support rack.

    b. A quantity of eight (8) or more conduits trade sizes 1 ½” to 2 1/2” are proposed for a conduit support rack.

    c. A quantity of four (4) or more conduits trade sizes 3” and larger are proposed for a conduit support rack.

11. Single conduits installed exposed along walls and ceilings shall be secured to the wall or ceiling with a one-hole conduit clamp and clamp-back. Where multiple conduits are installed exposed together, support channel and conduit clamps shall be used.

- END OF SECTION -

SECTION 16195 - ELECTRICAL - IDENTIFICATION

PART 1 -- GENERAL

1.01 THE REQUIREMENT

A. All electrical equipment shall be properly identified in accordance with these Specifications and the Contract Drawings. All switchgear, switchboards, motor control centers, variable frequency drives, lighting and distribution panelboards, combination starters, control panels, pull and junction boxes, enclosures, disconnect switches, control stations, and similar equipment shall be identified in the manner described, or in an equally approved manner.

B. The types of electrical identification specified in this section include, but are not limited to, the following:

1. Operational instructions and warnings.

2. Danger signs.

3. Equipment/system identification signs.

4. Nameplates.

1.02 SIGNS

A. "DANGER-HIGH-VOLTAGE" signs shall be securely mounted on the entry doors of all electrical rooms.

1.03 LETTERING AND GRAPHICS

A. The Contractor shall coordinate names, abbreviations, and other designations used in the electrical identification work with the corresponding designations shown, specified or scheduled. Provide numbers, lettering, and wording as indicated or, if not otherwise indicated, as recommended by manufacturers or as required for proper identification and operation/maintenance of the electrical systems and equipment.

1.04 SUBMITTALS

A. In accordance with the procedures and requirements set forth in the General Conditions and Section 01300, Submittals, the Contractor shall obtain from the equipment manufacturer and submit shop drawings. Each submittal shall be identified by the applicable specification section.

1.05 SHOP DRAWINGS

A. Each submittal shall be complete in all respects, incorporating all information and data listed herein and all additional information required for evaluation of the proposed equipment's compliance with the Contract Documents.

B. Partial, incomplete, or illegible submittals will be returned to the Contractor without review for resubmittal.

C. Shop drawings shall include but not be limited to:

1. Product data sheets.

PART 2 -- PRODUCTS

2.01 MANUFACTURERS

A. The material covered by these Specifications is intended to be standard material of proven performance as manufactured by reputable concerns. Material shall be fabricated, constructed, and installed in accordance with the best practices of the trade, and shall operate satisfactorily when installed as specified herein and shown on the Drawings.

2.02 NAMEPLATES

A. Nameplates shall be engraved, high pressure plastic laminate, white with black lettering.

B. Nameplates shall be attached to NEMA 4X enclosures utilizing UL-recognized mounting kits designed to maintain the overall UL Type rating of the enclosure. Mounting kit fasteners shall be stainless steel Type AHK10324X as manufactured by Hoffman, or equal.

2.03 HIGH VOLTAGE SIGNS

A. Standard "DANGER" signs shall be of baked enamel finish on 20 gage steel; of standard red, black and white graphics; 14 inches by 10 inches size except where 10 inches by 7 inches is the largest size which can be applied where needed, and except where a larger size is needed for adequate identification.

2.04 CONDUIT IDENTIFICATION

A. Conduit identification shall be as specified in Section 16111, Conduit.

2.05 WIRE AND CABLE IDENTIFICATION

A. Field installed wire and cable identification shall be as specified in Section 16123, Low Voltage Wire and Cable.

B. A plastic laminate nameplate shall be provided at each panelboard, motor control center, switchgear assembly, and switchboard assembly. This nameplate shall be used to clearly

convey the conductor identification means used at that piece of equipment (i.e. Phase A=Brown, Phase B=Orange, C = Yellow).

C. Wiring identification for factory installed wiring in equipment enclosures shall be as specified in the respective section.

2.06 BOX IDENTIFICATION

A. Pull, junction and device box identification shall be as specified in Section 16130 – Boxes.

PART 3 -- EXECUTION

3.01 NAMEPLATES

A. Nameplates shall be attached to the equipment enclosures with (2) two stainless steel sheet metal screws for nameplates up to 2-inches wide. For nameplates over 2-inches wide, four (4) stainless steel sheet metal screws shall be used, one (1) in each corner of the nameplate. The utilization of adhesives is not permitted.

3.02 OPERATIONAL IDENTIFICATION AND WARNINGS

A. Wherever reasonably required to ensure safe and efficient operation and maintenance of the electrical systems and electrically connected mechanical systems and general systems and equipment, including prevention of misuse of electrical facilities by unauthorized personnel, install plastic signs or similar equivalent identification, instruction, or warnings on switches, outlets, and other controls, devices, and covers or electrical enclosures. Where detailed instructions or explanations are needed, provide plasticized tags with clearly written messages adequate for the intended purposes. Signs shall be attached as specified above for nameplates.

3.03 POWER SOURCE IDENTIFICATION

A. After installation of all field equipment (i.e. valves, motors, fans, unit heaters, instruments, etc) install nameplates at each power termination for the field equipment. Nameplate data shall include equipment designation (tag number), power source (MCC number, panelboard, etc), circuit number, conduit number from schedule and voltage/phase.

B. Contractor to coordinate with the Engineer and the Owner regarding exact nameplate placement during construction.

C. Nameplates shall be as specified herein.

- END OF SECTION -

SECTION 16426 - LOW VOLTAGE SWITCHBOARDS

PART 1 -- GENERAL

1.01 THE REQUIREMENT

A. The Contractor shall furnish, install, test, and place in satisfactory operation, the low voltage switchboards as specified herein and indicated on the Drawings.

B. The line-up shall contain main breakers, tie breakers, feeder breakers, metering equipment, control devices, and all accessories as specified herein, indicated on the Drawings, and as required to result in a complete and operable power distribution equipment assembly.

C. The Contractor shall obtain the switchboard from one manufacturer who shall also manufacture the structure and major equipment components, which includes, but is not limited to, circuit breakers, instrument transformers, meters, relays, and controls. Sub-contracting of wiring is not acceptable.

D. The switchboard shall be assembled using NEMA rated components. Components designed and built to International Electrotechnical Commission (IEC) standards are not recognized. Equipment designed, manufactured and labeled in compliance with IEC standards is not acceptable.

E. Circuit breaker control and relaying/metering circuits shall be wired in accordance with the requirements specified herein or indicated on the Drawings.

1.02 CODES AND STANDARDS

A. All equipment shall be listed by and shall bear the label of Underwriter's Laboratories, Incorporated (U.L.).

B. The equipment shall comply with the following codes and standards:

1. National Electrical Code (NEC)

2. Institute of Electrical and Electronic Engineers (IEEE)

3. American National Standards Institute (ANSI):

   a. C57.13 - Instrument Transformers.

4. National Electrical Manufacturer's Association (NEMA):

   a. AB 1 - Molded Case Circuit Breakers and Molded Case Switches.

   b. PB 2 - Deadfront Distribution Switchboards.

5. Underwriters Laboratories, Inc. (U.L.):

   a. U.L. 98 - Enclosed and Dead Front Switches.

   b. U.L. 489 - Molded Case Circuit Breakers.

   c. U.L. 891 - Dead-Front Switchboards.

1.03 SUBMITTALS

A. In accordance with the procedures and requirements set forth in the General Conditions and Section 01300, Submittals, the Contractor shall obtain from the equipment manufacturer and submit the following:

   1. Shop Drawings

   2. Operation and Maintenance Manuals

   3. Spare Parts List

   4. Reports of Certified Shop and Field Tests

   5. Manufacturer’s Representatives Installation Certification

B. Each submittal shall be identified by the applicable specification section.

1.04 SHOP DRAWINGS

A. Each submittal shall be complete in all respects, incorporating all information and data listed herein and all additional information required for evaluation of the proposed equipment's compliance with the Contract Documents.

B. Partial, incomplete or illegible submissions will be returned to the Contractor without review for resubmittal.

C. Shop drawings for <u>each switchboard assembly</u> shall include but not be limited to:

   1. A Compliance, Deviations, and Exceptions (CD&E) letter. If the shop drawings are submitted without this CD&E letter, the submittal will be rejected. The letter shall include all comments, deviations and exceptions taken to the Drawings and Specifications by the Contractor AND Equipment Manufacturer/Supplier. This letter shall include a copy of this specification section. In the left margin beside each and every paragraph/item, a letter "C", "D", or "E" shall be typed or written in. The letter "C" shall be for full compliance with the requirement. The letter "D" shall be for a deviation from the requirement. The letter "E" shall be for taking exception to a requirement. Any requirements with the letter "D" or "E" beside them shall be provided with a full typewritten explanation of the deviation/exception. Handwritten explanation of the deviations/exceptions is not acceptable. The CD&E letter shall also address deviations, and exceptions taken to each Drawing related to this Specification Section.

2. Product data sheets identifying all electrical ratings.

3. Complete assembly, layout, anchoring, and installation drawings with clearly marked dimensions.

4. Approximate total shipping weight of each equipment assembly.

5. Example equipment nameplate data sheet.

6. Plan, front and side view drawings, including overall dimensions of each switchboard assembly. Identify shipping splits and show conduit stub-up area locations on the Drawings.

7. Internal wiring diagram of each low voltage switchboard assembly. Each wiring diagram shall include wire identification and terminal numbers.

8. Internal interconnection wiring diagrams including wiring identification and terminal numbers.

9. Complete single line diagram for each switchboard line-up. The drawing shall indicate devices comprising the switchboard assembly including, but not limited to, circuit breakers, control power and instrument transformers, meters, relays, and control devices. Clearly indicate electrical ratings of all devices.

10. Bill of material list for each switchboard assembly.

11. Nameplate schedule.

12. Manufacturer's installation instructions.

13. Manufacturer's warranty statement.

14. Key interlock scheme drawing and sequence of operations.

The shop drawing information shall be complete and organized in such a way that the Engineer can determine if the requirements of these specifications are being met. Copies of technical bulletins, technical data sheets from "soft-cover" catalogs, and similar information which is "highlighted" or somehow identifies the specific equipment items the Contractor intends to provide are acceptable and shall be submitted.

1.05 OPERATIONS AND MAINTENANCE MANUALS

A. The Contractor shall submit operation and maintenance manuals in accordance with the procedures and requirements set forth in the General Conditions and Division 1. The manuals shall include:

1. Instruction books and/or leaflets.

2. Recommended spare parts list.

3. Final as-built construction drawings included in the shop drawings incorporating all changes made in the manufacturing process and field installation.

1.06 SPARE PARTS

A. The switchboard shall be furnished with all spare parts as recommended by the equipment manufacturer. All spaces in switchboards shall be furnished with a spare circuit breaker where indicated on the Drawings.

B. The spare parts shall be packed in containers suitable for long term storage, bearing labels clearly designating the contents and the pieces of equipment for which they are intended.

C. Spare parts shall be delivered at the same time as the equipment to which they pertain. The Contractor shall properly store and safeguard such spare parts until completion of the Work, at which time they shall be delivered to the Owner.

D. Spare parts lists, included with the shop drawing submittal shall indicate specific sizes, quantities, and part numbers of the items to be furnished. Terms such as "1 lot of packing material" are not acceptable.

E. Parts shall be completely identified with a numerical system to facilitate parts inventory control and stocking. Each part shall be properly identified by a separate number. Those parts which are identical for more than one size, shall have the same parts number.

1.07 IDENTIFICATION

A. Each switchboard assembly shall be identified with the identification name and/or number indicated on the Drawings (e.g., SWBD-HSPS). A nameplate shall be securely affixed in a conspicuous place on each switchboard assembly. Nameplates shall be as specified in Section 16195, Electrical - Identification.

PART 2 -- PRODUCTS

2.01 MANUFACTURERS

A. The equipment covered by these specifications is intended to be standard equipment of proven performance as manufactured by reputable concerns. Equipment shall be designed, constructed, and installed in accordance with the best practices of the trade, and shall operate satisfactorily when installed as shown on the Drawings.

B. It is the intent of these specifications that the switchboard be produced by a single manufacturer who shall be responsible for matching all components and providing equipment which functions together as a system.

C. The equipment shall be Pow-R-Line C as manufactured by Eaton, or Square D Company equivalent, or Engineer approved equal. Due to the physical constraints only manufacturers that can meet the

2.02 CIRCUIT BREAKER SWITCHBOARD

A. General

1. Furnish and install dead-front type, completely metal enclosed, self-supporting electrical equipment including main circuit breaker(s) and molded case branch circuit breaker assemblies of the number, rating and type noted on the Drawings. The equipment shall meet Underwriters' Laboratories requirements and shall be a furnished with a U.L. service entrance label where indicated on the Drawings.

2. The main breaker sections and distribution sections shall be NEMA Type 1 (gasketed) industrial use enclosures. The main circuit breaker sections shall be totally accessible from the front and the sides. The distribution switchboard sections shall be totally accessible from the front and the sides. Equipment assemblies requiring rear access are not acceptable. The framework shall be of U.L. gauge steel. Ventilation shall be provided as required. **The dimensions and physical alignment of the switchgear enclosure shall be provided as indicated on the Drawings. This includes appropriate bus transition sections as indicated on the Drawings. Manufacturer's equipment which cannot conform to dimensional requirements will not be permitted for this project.**

3. All wire troughs shall have hinged doors.

4. The equipment assemblies shall be suitable for operation at the available fault current, 65 kA (minimum). The equipment assemblies shall be labeled to indicate the maximum available fault current rating, taking into account the structure, bussing, main circuit breaker and switchboard branch circuit devices. The short circuit current rating shall not be less than that specified herein or indicated on the Drawings. The distribution switchboard branch circuit devices short circuit current rating shall be fully rated.

5. All bus shall be tin-plated copper. The bussing shall be of sufficient cross sectional area to meet U.L. standard 891 for temperature rise. The fully rated main bus shall have a maximum ampacity as indicated on the Drawings and extend the full length of the equipment. The main bus shall be 100 percent rated. The ground bus shall be sized per U.L. standard 891, installed in the entire length of the equipment assemblies. The distribution switchboard bus shall be rated as required by the rating of the mounted branch devices, including spares or spaces. Full height vertical bus shall be provided to accommodate future circuit breakers. Less than full height vertical bus which will only accommodate the circuit breakers included for this project is unacceptable.

6. Provide engraved plastic nameplates to identify the main circuit breaker and each branch circuit breaker. The circuit number and circuit name shall appear on the nameplate in accordance with the single line diagram(s) indicated on the Drawings. Nameplates shall be as specified in Section 16195, Electrical - Identification.

C. Main Circuit Breaker Section

1. The main circuit breaker section shall be furnished and installed for front and side accessibility and manufactured to accept a bus duct connection.

2. The main circuit breaker shall be a fixed type, insulated case, manually operated, on-off breaker, 100 percent rated with full-function trip system, sensors, and rating plug.

3. The main circuit breaker shall be Square-D Company Masterpact type NW, Eaton Magnum SB type, or equal. The breaker shall be rated for 65,000 A RMS symmetrical at 480V. The full function trip system shall be MICROLOGIC by Square D Company or Eaton Digitrip RMS 1150+ with adjustable instantaneous, long-time pick-up and delay, short-time pick-up and delay, ground fault pick-up and delay, and trip indicator, minimum. The main breaker shall be capable of being tripped from a remote control circuit (e.g. command from computer control system or hard-wired trip circuit).

4. Provide control power and current transformers as required. Provide a minimum of two (2) auxiliary contacts for remote indication of breaker position. Provide other accessories as specified herein or indicated on the Drawings.

D. Distribution Switchboard

1. The distribution switchboard shall be furnished complete with auxiliary section to accept an incoming bus duct connection. This auxiliary section shall be completely front accessible.

2. The auxiliary section shall also contain a power meters and surge protection devices as specified herein, in the quantities indicated on the Drawings. All voltage and current transformers, fuses, wiring, and other devices shall be furnished and installed to produce a complete monitoring system.

3. The distribution switchboard shall include group-mounted branch circuit breakers which are to be totally front accessible and front connectable. The circuit breaker connections to the distribution panel bussing shall be of bolt-on design such that the connections grip the bus bars firmly under high-fault conditions.

4. The switchboard manufacturer shall provide all the proper lugs for all cable connections as required to avoid field modifications.

5. Branch circuit breakers shall be molded case type with ratings as indicated on the Drawings. Some branch circuit breakers shall have shunt trips as indicated on the Drawings. Branch circuit breakers shall be rated for 65,000 A RMS symmetrical at 480V.

2.03 SURGE PROTECTIVE DEVICES

A. The switchboard shall be furnished with integrated Type II surge protective devices (SPD). SPDs shall be provided in the location and quantity as shown on the Drawings.

B. The SPD shall be rated, designed, tested, listed, and labeled in accordance with UL-1449, latest edition.

C. The SPD shall be factory installed by the switchboard manufacturer using a direct bus connection. There shall be no cable connection between the bus bar and the SPD device.

D. The SPD shall have a fault current rating equal to or greater than that of the fault current rating of the switchboard. The SPD shall employ metal-oxide varistor (MOV) technology. If integral fusing is used, the fuses shall allow the maximum rated surge current to pass without fuse operation.

E. The SPD shall have a maximum continuous operating voltage (MCOV) of at least 115% of the nominal voltage of the switchboard. The Voltage Protection Rating (VPR) of each SPD shall not exceed the following:

SYSTEM VOLTAGE	L-N	L-G	L-L	N-G
208Y/120	700V	700V	1200V	700V
480Y/277	1200V	1200V	1800V	1200V
480 DELTA	N/A	1200V	2000V	N/A
240 DELTA	N/A	1200V	1200V	N/A
120/240	700V	700V	1200V	700V

F. The Nominal Discharge Current (I_n) of the SPD shall be 20kA. Peak surge current ratings shall not be used as a basis for applying the SPD to the system.

The surge current rating for each SPD shall be as indicated on the Drawings. Surge current ratings are indicated on single line diagrams. Surge current rating indicated is on a per phase basis.

G. Each SPD system shall provide surge protection in all possible modes. Surge protection shall be as follows:

SYSTEM CONFIGURATION	MODES OF PROTECTION	NUMBER OF MODES
3-Phase Wye	L-N, L-G, N-G	7
3-Phase Delta	L-L, L-G	6
3-Phase Impedence Grounded	L-L, L-G	6
Single-Phase	L-N, L-G, N-G	3

H. The SPD shall be furnished with an audible alarm and silence pushbutton, integral SPD status LEDs (one per phase), and a Form C dry contact for remote indication of alarm. A surge counter shall also be provided.

I. The SPD equipment shall be SPD Series by Eaton, SurgeLogic by the Square D Company or equal.

2.04 Power Metering

A. Provide an IQ Analyzer 6000 as manufactured by Eaton. Power metering manufacturer shall match the manufacturer of the circuit breakers and other components of the switchgear assembly. Provide the quantity indicated on the Drawings.

B. Power meter shall be provided with 1GB of memory, minimum, and network communications port. A hardware gateway shall be provided in each half of the switchgear. Each hardware gateway shall convert the network communications from the respective meter to the EtherNet\IP protocol for communication of metering parameters to the plant control system. The following parameters shall be communicated as a minimum:

- Current (all phases)
- Voltage (all phases)
- KW, KVAR, KVA
- Power Factor

PART 3 -- EXECUTION

3.01 INSTALLATION

A. The switchboard shall be furnished and installed as shown on the Drawings and in accordance with the manufacturer's installation instructions. One (1) copy of these instructions shall be included with the equipment at time of shipment. The equipment shall be suitably protected until accepted by the Owner.

B. The equipment shall be installed and checked in accordance with the manufacturer's recommendations. This shall include but not limited to:

1. Checking to ensure that the pad location is level to within .125 inches.

2. Checking to ensure that all bus bars are torqued to the manufacturer's recommendations.

3. Assemble all shipping sections, remove all shipping braces and connect all shipping split mechanical and electrical connections.

4. Secure assemblies to foundation or floor channels.

5. Inspect and install all circuit breakers in their proper places.

3.02 PAINTING

A. Prior to final completion of the work, all metal surfaces of the equipment shall be cleaned thoroughly, and all scratches and abrasions shall be retouched with the same lacquer as used for shop finishing coats.

3.03 TESTING

A. All tests shall be performed in accordance with the requirements of the General Conditions, and Division 1. The following tests are required:

1. Witness Shop Tests

a. Not required.

OR

a. The equipment specified in this Section shall be witness shop tested and inspected in accordance with the equipment manufacturer's standard procedures. The testing and inspection procedures shall demonstrate that the equipment tested conforms to the requirements specified.

2. Certified Shop Tests and Reports

a. Submit description of proposed testing methods, procedures, and apparatus. Submit notarized and certified copies of all test reports.

b. As a minimum, the entire switchboard assembly shall go through a quality inspection before shipment. This inspection shall include, but is not limited to, the following:

i. Physical inspection of the structure and the electrical conductors including bussing, general wiring, and units.

ii. General electrical tests including power circuit phasing, control circuit wiring, instrument transformers, meters, ground fault system, and device electrical operation.

iii. AC dielectric tests of the power circuits and control circuits.

iv. Markings/labels, including instructional type, Underwriters Laboratory (U.L.), and inspector's stamps.

The manufacturer shall use integral quality control checks throughout the manufacturing process to maintain the correctness of the switchboard.

3. Field Tests

a. Field tests shall be performed in accordance with requirements specified in the General Conditions, Division 1, and NETA Acceptance Testing Specifications, latest edition

3.04 SERVICES OF MANUFACTURER'S REPRESENTATIVE

A. The Contractor shall provide the services of a qualified, factory-trained manufacturer's technical representative who shall adequately supervise the installation and testing of all equipment furnished under this Contract. The manufacturer's representative shall certify in writing that the equipment has been installed in accordance with the manufacturer's

recommendations. No further testing or equipment startup may take place until this certification is accepted by the Owner.

B. The manufacturer’s technical representative shall perform startup and functional testing of the switchboard and controls as specified herein.

C. The Contractor shall provide training for Owner personnel. Training shall be conducted by the manufacturer's factory-trained representative who shall instruct Owner personnel in operation and maintenance of all equipment provided under this Section. Training shall be provided for two (2) sessions of four (4) hours each. Training shall not take place until after all switchboard units have been installed and energized. Training shall be at times coordinated with the Owner.

D. The services of the manufacturer's representative shall be provided for a period of not less than as follows:

1. One (1) trip of two (2) working days during the installation of the switchboard.

2. One (1) trip of two (2) working days for the testing and startup of the switchboard.

3. One (1) trip of one (1) working day to perform training as specified herein.

4. One (1) trip of one (1) working day two (2) months before the warranty expiration to identify any issues to be corrected under warranty.

E. Any additional time required to achieve successful installation and operation shall be at the expense of the Contractor.

3.05 FIELD ADJUSTMENTS

A. The circuit breaker trip units shall be set in the field by a qualified representative of the manufacturer, or an outside testing company retained by the Contractor, in accordance with the settings designated in the coordination study. See Section 16000 – Basic Electrical Requirements.

- END OF SECTION -

SECTION 16428 - LOW VOLTAGE SWITCHGEAR

PART 1 -- GENERAL

1.01 THE REQUIREMENT

A. The Contractor shall furnish, install, test, and place in satisfactory operation, dead-front type, low voltage, draw-out, metal enclosed power circuit breaker switchgear as specified herein and indicated on the Drawings.

B. The switchgear shall be the air break power circuit breaker type with drawout circuit breaker elements.

C. The line-up shall contain utility main breaker, a generator breaker, feeder breakers, metering equipment, control devices, and all accessories as specified herein, indicated on the Drawings, and as required to result in a complete and operable power distribution equipment assembly.

D. The Contractor shall obtain the switchgear from one manufacturer who shall also manufacture the structure and major equipment components, which includes, but is not limited to, assemblies of circuit breakers and auxiliary housings, drawout type air circuit breakers, instrument transformers, meters, relays, and controls. Sub-contracting of wiring is not acceptable.

E. The switchgear shall be assembled using NEMA rated components. Components designed and built to International Electrotechnical Commission (IEC) standards are not recognized. Equipment designed, manufactured and labeled in compliance with IEC standards is not acceptable.

F. Circuit breaker control and relaying/metering circuits shall be wired in accordance with the requirements specified herein or indicated on the Drawings.

H. Reference Section 16902, Electric Controls and Relays.

1.02 CODES AND STANDARDS

A. The switchgear assemblies and power circuit breakers shall comply with the following codes and standards:

1. American National Standards Institute (ANSI):

   a. C37.13 - Low Voltage AC Power Circuit Breakers Used in Enclosures.

   b. C37.16 - Preferred Ratings, Related Requirements and Application Recommendations for Low Voltage Power Circuit Breakers and AC Power Circuit Protectors.

c. C37.20.1 - Standard for Metal - Enclosed Low Voltage Power Circuit Breaker Switchgear.

d. C37.51 - Standard Conformance Test Procedures for Metal-Enclosed Low Voltage AC Power Circuit Breaker Switchgear Assemblies.

2. Institute of Electrical and Electronic Engineers (IEEE).

3. National Electrical Manufacturers' Association (NEMA):

a. SG3 - Low-Voltage Power Circuit Breakers.

b. SG5 - Power Switchgear Assemblies.

4. Underwriters Laboratories, Inc. (UL):

a. UL 1558 - Metal-Enclosed Low Voltage Power Circuit Breaker Switchgear.

b. UL 1066 –Low-Voltage AC and DC Power Circuit Breakers Used in Enclosures

1.03 SUBMITTALS

A. In accordance with the procedures and requirements set forth in the General Conditions and Section 01300, Submittals, the Contractor shall obtain from the equipment manufacturer and submit the following:

1. Shop Drawings

2. Operation and Maintenance Manuals

3. Spare Parts List

4. Proposed Testing Methods and Reports of Certified Shop Tests

5. Manufacturer’s Field Start-up Report

6. Manufacturer’s Representative’s Installation Certification

B. Each submittal shall be identified by the applicable specification section.

1.04 SHOP DRAWINGS

A. Each submittal shall be complete in all respects, incorporating all information and data listed herein and all additional information required for evaluation of the proposed equipment's compliance with the Contract Documents.

B. Partial, incomplete or illegible submissions will be returned to the Contractor without review for resubmittal.

C. Shop drawings for each switchgear assembly shall include but not be limited to:

1. A Compliance, Deviations, and Exceptions (CD&E) letter. If the shop drawings are submitted without this CD&E letter, the submittal will be rejected. The letter shall include all comments, deviations and exceptions taken to the Drawings and Specifications by the Contractor AND Equipment Manufacturer/Supplier. This letter shall include a copy of this specification section. In the left margin beside each and every paragraph/item, a letter "C", "D", or "E" shall be typed or written in. The letter "C" shall be for full compliance with the requirement. The letter "D" shall be for a deviation from the requirement. The letter "E" shall be for taking exception to a requirement. Any requirements with the letter "D" or "E" beside them shall be provided with a full typewritten explanation of the deviation/exception. Handwritten explanation of the deviations/exceptions is not acceptable. The CD&E letter shall also address deviations, and exceptions taken to each Drawing related to this Specification Section.

2. Equipment specifications and product data sheets identifying all electrical ratings.

3. Complete assembly, layout, installation, and foundation drawings with clearly marked dimensions.

4. Assembled weight of units and approximate total shipping weight.

5. Example equipment nameplate data sheet.

6. Plan, front and side view drawings, including overall dimensions of each switchgear assembly. Identify shipping splits and show conduit stub-up area locations on the drawings.

7. Internal wiring diagram of each low voltage switchgear compartment. Each wiring diagram shall include wire identification and terminal numbers.

8. Internal compartment-to-compartment interconnection wiring diagrams including wiring identification and terminal numbers.

9. Complete one-line diagram of each switchgear line-up and complete three-line diagram for each switchgear line-up. These drawings shall indicate devices comprising the switchgear assembly including, but not limited to, circuit breakers, control power and instrument transformers, meters, relays, and control devices. Clearly indicate electrical ratings of all devices.

10. Bill of material list for each switchgear assembly including each switchgear compartment.

11. Nameplate schedule for each compartment.

12. Manufacturer's installation instructions.

13. Manufacturer's written warranty statement.

14. Written sequence of operation for automatic transfer controls.

The shop drawing information shall be complete and organized in such a way that the Engineer can determine if the requirements of these specifications are being met. Copies of technical bulletins, technical data sheets from "soft-cover" catalogs, and similar information which is "highlighted" or somehow identifies the specific equipment items the Contractor intends to provide are acceptable and shall be submitted.

1.05 OPERATIONS AND MAINTENANCE MANUALS

A. The Contractor shall submit operation and maintenance manuals in accordance with the procedures and requirements set forth in the General Conditions and Division 1. The manuals shall include:

1. Instruction books and/or leaflets.

2. Recommended spare parts list.

3. Final as-built construction drawings included in the shop drawings incorporating all changes made in the manufacturing process.

1.06 SPARE PARTS

A. The switchgear shall be furnished with all spare parts as recommended by the equipment manufacturer.

In addition to the spare parts recommended by the manufacturer, the Contractor shall furnish the following minimum spare parts for each switchgear assembly:

No. Required	Description
1 set	Fuses of each size provided.
1	Control power transformer of each size used.
1	Lamps and lenses for indicating lights, each color.
1	Indicating lamp sockets for each type used.
2	Pilot devices (e.g. pushbutton, selector switch, etc.) complete with contact blocks and legend plates for each type, color, size and rating used.

B. The spare parts shall be packed in containers suitable for long term storage, bearing labels clearly designating the contents and the pieces of equipment for which they are intended.

C. Spare parts shall be delivered at the same time as the equipment to which they pertain. The Contractor shall properly store and safeguard such spare parts until completion of the Work, at which time they shall be delivered to the Owner.

D. Spare parts lists, included with the shop drawing submittal shall indicate specific sizes, quantities, and part numbers of the items to be furnished. Terms such as "1 lot of packing material" are not acceptable.

E. Parts shall be completely identified with a numerical system to facilitate parts inventory control and stocking. Each part shall be properly identified by a separate number. Those parts which are identical for more than one size, shall have the same parts number.

1.07 IDENTIFICATION

A. Each switchgear assembly shall be identified with the identification number indicated on the Drawings (e.g., Switchgear MF2). A nameplate shall be securely affixed in a conspicuous place on each switchgear assembly. Nameplates shall be as specified in Section 16195, Electrical - Identification.

1.08 WARRANTY TERMS

A. The manufacturer's and Contractor's warranty shall in no event be for a period of less than two (2) years from date of delivery of equipment to the project site and shall include repair labor, travel expense necessary for repairs at the jobsite, and expendables used during the course of repair. Submittals received without written warranties as specified shall be rejected in their entirety.

B. The Contractor shall provide a complete warranty covering all equipment included in the scope of supply. This warranty shall include, but is not limited to, the following:

- All transfer controls
- Complete switchgear lineup, including all components and accessories

PART 2 -- PRODUCTS

2.01 MANUFACTURERS

A. The equipment covered by these specifications is intended to be standard equipment of proven performance as manufactured by reputable concerns. Equipment shall be designed, constructed and installed in accordance with the best practices of the trade, and shall operate satisfactorily when installed as shown on the Drawings.

B. It is the intent of these specifications that the switchgear be produced by a single manufacturer who shall be responsible for matching all components and providing equipment which functions together as a system. Manufacturers that provide complete switchgear assemblies using power circuit breakers produced by another major manufacturer shall only be allowed if specifically accepted by the Engineer

C. The switchgear associated with this project will be adding to the existing Eaton Magnum DS lineup, therefore the new switchgear shall be Magnum DS as manufactured by Eaton to match existing. **No substitutions shall be permitted.**

2.02 LOW VOLTAGE METAL ENCLOSED SWITCHGEAR

A. General

1. Switchgear shall be suitable for use as service entrance equipment in accordance with Underwriters Laboratories requirements. Each complete assembly shall bear a U.L. label.

B. Ratings

1. Voltage rating shall be as indicated on the Drawings. The entire assembly shall be suitable for 600 volts maximum AC service.

2. Rate complete switchgear assembly to withstand mechanical forces exerted during short circuit conditions when connected directly to a power source having available fault current of 65,000 amperes symmetrical at rated voltage. Test switchgear for conformance according to ANSI C37.51.

3. The bus system shall have a minimum ANSI 30-cycle short circuit withstand rating of 100,000 amperes symmetrical without upstream current limiting fuses.

4. All ratings shall be tested to the requirements of ANSI C37.20.1, C37.50 and C37.51 and U.L. witnessed and approved.

5. The switchgear assembly enclosure rating shall be NEMA 1 suitable for indoor use. Enclosure shall be painted ANSI-61 light grey, using the manufacturer's standard painting process.

C. Stationary Structure

1. The switchgear structure shall be constructed of formed sections of specially smooth and leveled steel, welded together and reinforced where necessary with formed steel members. The sides shall be covered with removable bolt on covers. The resulting structure shall be rigid and self-supporting.

2. The rear of structure shall be covered with concealed hinged, padlockable steel doors for access to buses, connections, and other equipment mounted within. The ends of the structure shall be closed with removable steel panels held in place with slotted head bolts or concealed screws. The hinged access doors shall be provided with 2-point latches, door stops, structural reinforcing to prevent sagging and provisions for padlocking. Knurled screwhead type fasteners are not acceptable.

3. Secondary control devices and associated wiring shall be isolated from all high voltage primary devices by grounded metal barriers. Primary circuits such as circuit breakers, transformers, and buses shall also be isolated from each other and from personnel by grounded metal barriers.

4. The assembly shall be provided with adequate lifting means and shall be capable of being moved into installation position and bolted directly to Contractor supplied floor sills to be set level in concrete per manufacturer's instructions. Provisions shall be made for jacking of shipping groups for removal of skids or insertion of equipment rollers. Base of assembly shall be suitable for rolling directly on pipes without skids.

5. Each vertical steel unit forming part of the switchgear line-up shall be a self-contained housing having one or more individual breaker or instrument compartments, a centralized main bus compartment, and a rear cabling compartment. Each individual circuit breaker compartment shall be segregated from adjacent compartments and sections, including the bus compartment, by means of grounded steel barriers. It shall be equipped with drawout rails and primary and secondary disconnecting contacts. Current transformers for feeder instrumentation, where indicated on the Drawings, shall be located within the appropriate breaker cells.

6. The stationary part of the primary disconnecting devices for each power circuit breaker shall consist of a set of contacts extending to the rear through a glass polyester insulating support barrier; corresponding moving finger contacts suitably spaced shall be furnished on the power circuit breaker studs which engage in only the CONNECTED position. The assembly shall provide multiple silver-to-silver full floating high pressure point contacts with uniform pressure on each finger maintained by springs. Each circuit shall include the necessary three-phase bus connections between the section bus and the breaker line side studs. Load studs shall be equipped with insulated copper load extension busses. Bus extensions shall be tin-plated where outgoing terminals are attached.

7. The secondary disconnecting devices shall consist of floating fingers mounted on the removable unit and engaging flat contact segments at the rear of the compartment. The secondary disconnecting devices shall be silver-plated and sliding contact engagement shall be maintained in the CONNECTED and TEST positions.

8. The removable power circuit breaker element shall be equipped with disconnecting contacts, and interlocks for drawout application. It shall have four positions, CONNECTED, TEST, DISCONNECTED and REMOVE all of which permit closing the compartment door. Breakers shall be dead-front, through door construction, allowing racking with the door closed. The breaker drawout element shall contain a worm gear levering "in" and "out" mechanism with removable lever crank. Mechanical interlocking shall be provided so that the breaker is in the tripped position before levering "in" and "out" of the cell. The breaker shall include a provision for padlocking open to prevent manual or electric closing. The padlocking shall also secure the breaker in the CONNECTED, TEST, or DISCONNECTED position by preventing levering.

9. An insulating flash shield shall be mounted above each circuit breaker to prevent flashover from the arc chutes to ground.

10. Hinged doors shall be provided for the fronts of the drawout circuit breaker compartments.

11. Hinged panels shall be provided for mounting of meters, protective relays, and other devices. Doors and panels shall be equipped with concealed hinges and suitable latches. Doors and panels shall have one-inch (1") deep formed edges with double returns where necessary to assure stiffness.

12. A glass polyester safety shutter shall be furnished to automatically cover the bus stabs in the circuit breaker compartment when the circuit breaker unit is moved to the TEST, DISCONNECTED, or REMOVE position.

13. Provide a rear compartment steel barrier between the cable compartment and main bus to protect against inadvertent contact with the main or vertical bus bars. Provide full height and depth metal barriers between adjacent vertical structures in the cable compartment. Provide a full height and depth glass polyester barrier with appropriate slots for the main bus between adjacent vertical structures in the bus compartment.

14. Equip each cable compartment with cable lug adapters complete with hydraulic compression lugs which can be mounted up or down at a 45 degree angle to facilitate cable termination with a minimum bending radius. Provide lugs including grounding lugs, suitable for copper cable, of quantity and size required for the cables indicated on the Drawings. Mechanical type lugs utilizing a set screw are not acceptable.

15. Except as otherwise described herein, all "space" compartments specified herein or indicated on the Drawings shall be furnished as "prepared spaces" or "futures" complete with buses, supports, insulators, primary and secondary disconnects, lugs for future outgoing cables, and rails ready to receive a future circuit breaker of appropriate size. Insulating barriers shall be installed in the cubicles to cover all live terminals to prevent accidental contact.

16. The withdrawal type units and the stationary sections for these units shall be assembled in jigs which accurately locate the contacts, holding devices, and interlocks. One removable unit of each type and rating shall be tried in each stationary compartment of same type and rating. Each stationary compartment shall be checked with its own removable unit to insure interchangeability.

17. Switchgear shall be furnished complete with fused, thermostatically controlled spare heaters. One space heater shall be installed in each vertical structure. Utilize tubular type operated at half voltage for long life; 250 volt rated heaters at 120 volt. Provide power supplies to the space heaters as specified herein and indicated on the Drawings. The Contractor shall wire heaters to provide temporary heating during storage.

D. Bus

1. Buses and main connections shall consist of tin plated flat copper bars or copper channels of suitable size carried on supports fabricated from an approved insulating material. The buses shall be mounted in a compartment at the rear or above the circuit breakers. Bus sizes shall be based upon a maximum current density of 1000 amperes per square inch. All bus connections, including shipping breaks and for future bus extensions, shall be silver-plated and tightly clamped with through bolts. Provide all bus joints with Bellville type spring washers. Buses shall have a continuous current-carrying capacity of not less than that specified herein or indicated on the Drawings.

2. Insulate/isolate buses to protect against spread of arcing faults and accidental contact by people or foreign objects.

3. Provide the 3 phase bus of each unit with insulation to completely encase each bar, including where provisions have been made by splicing adjacent units together, or making connections to disconnecting devices.

4. Fabricate bus bar molded insulation, molded insulation covers for bus joints, and bus insulated supports from insulation possessing flame-retardant and self-extinguishing, dielectric and anti-hydroscopic properties.

5. Provide a neutral landing lug in the incoming cable area to allow landing of all neutral conductors as indicated on the Drawings. Provide a bonding jumper from the neutral lugs to the ground bus for service entrance rated assemblies.

6. A tin plated ground bus of adequate capacity (1/4-inch by 2-inch minimum) shall be furnished and installed throughout the switchgear structure. Each stationary unit shall be effectively connected to this ground bus. A substantial ground contact shall be provided between each breaker and removable element and the ground bus, which shall automatically be made before the primary contacts touch. Contact engagement to the ground bus shall be maintained in the CONNECTED and TEST positions. Ground relay panels with a No. 6 AWG insulated copper wire to the ground bus.

7. Main and ground buses shall be extended through all units, including spares and prepared spaces.

8. A full neutral bus shall be provided as specified herein and where indicated on the Drawings.

E. Removable Element

1. Removable element of each circuit breaker unit shall consist of a 3-pole power circuit breaker with trip-free stored-energy mechanism, positive mechanical interlock, primary and secondary disconnecting devices, auxiliary switches, position indicator, and control wiring. The removable element shall have four positions: CONNECTED, TEST, DISCONNECTED, and REMOVE, all of which permit closing of the compartment door.

2. Provide for mechanical locking of the removable element in the TEST and DISCONNECTED position. Lock shall not interfere with operation of the breaker and its mechanism.

3. Provide an interlock on each circuit breaker unit to prevent the circuit breaker from being removed while breaker is closed and to prevent breaker from being placed in CONNECTED position unless the breaker is open. If the circuit breaker is closed, the interlock shall trip the breaker before it can be placed in CONNECTED position.

F. Circuit Breakers

1. Each circuit breaker shall be drawout type and enclosed in a separate metal compartment.

2. Circuit breakers shall be rated in accordance with Underwriters Laboratories Standards, with the following minimum ratings:

   a. Nominal voltage: 480 volts.

   b. Maximum design voltage: 600 volts

   c. Low frequency withstand: 2.2 kV

   d. Frame continuous current rating: as indicated on the Drawings.

   e. Sensor rating: Same as frame rating.

   f. Rated interrupting time: 5 cycles.

   g. Interrupting capability at rated voltage: 65,000 amperes (symmetrical). To assure a fully selective system, all circuit breakers shall have 30 cycle short time withstand ratings equal to their symmetrical interrupting ratings, regardless of whether equipped with instantaneous trip protection or not.

   h. Where circuit breakers are equipped with current limiters, the combination shall have short time ratings in accordance with the characteristics of the limiter selected.

3. Circuit breakers shall be UL listed for application in their enclosures for 100 percent of their continuous current rating.

4. Circuit breakers of equal rating shall be completely interchangeable.

5. Equip each circuit breaker with secondary disconnecting contacts to automatically engage in the CONNECTED and TEST position to complete circuits as required.

6. Provide a means for racking in and out of the compartment and between positions. Provide a means for holding the circuit breaker in the compartment in all positions. Include a provision for padlocking open to prevent manual or electric closure of the circuit breaker.

7. Provide interlocking to prevent a closed circuit breaker from racking to or from any position. Provide an additional interlock to assure automatic discharging of the closing springs upon insertion or removal of the breaker into or out of the compartment.

8. Circuit breakers shall be equipped with arc suppressors and individual poles shall be separated by insulating barriers. Main contacts shall be silver faced. Arcing contacts shall have non-welding and high conductivity features.

9. Each low voltage power circuit breaker shall be equipped with current sensors and a self-powered microprocessor-based trip device to sense overload and short circuit conditions. Trip devices shall be interchangeable so that any trip device can be used with any frame size circuit breaker. The device shall measure true RMS currents. Peak sensing devices will not be accepted. All adjustment setting switches shall be digitally encoded type with gold contacts. Trip units shall be removable.

   Equip each circuit breaker with a Eaton Digitrip 1150+ microprocessor based trip unit complete with rating plug size as indicated on the Drawings. The trip units shall be furnished complete with all additional modules required to facilitate all trip unit functions. Trip units shall have adjustable long, short, instantaneous and ground fault functions. The main circuit breaker trip units shall be provided with a reduced energy let-thru mode to reduce arc-flash energy. The trip unit manufacturer shall match the manufacturer of the circuit breakers and other components of the switchgear assembly.

11. A programmable alarm relay output shall be provided to activate based on threshold and time delay values associated with any of the measured parameters. Alarm output operation shall be recorded in an event log.

12. The trip unit shall include an integral test pushbutton. A keypad shall be provided to enable the user to select the values of test currents within a range of available settings. The protection functions shall not be affected during test operations. The breaker may be tested in the TRIP or NO TRIP test mode.

13. Circuit breakers shall be equipped with a self-coupling primary and secondary disconnect contacts and arranged with a disconnect mechanism for moving it physically between the CONNECTED and DISCONNECTED positions.

14. A TEST position for each circuit breaker shall be provided and so interlocked to insure proper sequence and safe operation.

15. Each circuit breaker faceplate shall include a drawout position indicator, spring charge indictor, push-to-trip button, push-to-close mechanism release button, and open-close indicator.

16. Each circuit breaker shall be provided with "a" and "b" auxiliary contacts which will open or close when the breaker is open or closed. Each breaker shall also be provided with an alarm switch or contact to indicate that the breaker has tripped. All of these contacts shall be wired to terminals in each compartment for use in indicating breaker status. Each circuit breaker shall be furnished with enough auxiliary contacts to indicate breaker position as required for this Contract. Reference Section 17920, Control System Input/Output Schedule and Section 17950, Functional Control Descriptions.

G. Operation and Interlocks for the 480V Switchgear:

1. The new utility main breaker/generator main breaker pair (B-side) shall be mechanically interlocked with the existing tie breaker and the existing main/generator breaker pair (A-side). Key interlocks shall be accessible without opening the circuit breaker compartment door and shall function as follows:

   a. Permit closing one or both main breakers (or generator breakers) when the bus tie breaker is OPEN.

   b. Prevent closing the bus tie breaker when both main breakers (or generator breakers) are CLOSED.

   c. Permit closing the bus tie breaker when one or both main breaker/generator breaker pairs are OPEN.

   d. Permit closing of only one main breaker/generator breaker when the bus tie breaker is CLOSED.

   These key interlocks are in addition to electrical interlocks specified herein or indicated on the Drawings.

H. Current Transformers

1. Ring type current transformers shall be dry type, for indoor service, insulated for 600 volts, 10 kV BIL. Design shall have a mechanical and thermal rating to withstand short-circuit current, stresses, and heating effects equal to the rating of the circuit breaker of the application.

2. Current ratio shall be as indicated on the Drawings.

3. Transformers shall be rated in accordance with ANSI Standard C37.20.1, with accuracy of the current transformers suitable for BO.5 metering accuracy at rated burden. The transformers shall be sized for the necessary burden for the required devices, minimum.

4. Identify the current transformers for polarity with standard marking or symbols. The transformers shall be capable of carrying rated primary current continuously without damage.

5. Run secondary wiring from current transformers in suitable wiring trough, or conduit, to proper short-circuiting type terminal blocks for connection to relays, instruments, and other devices.

6. Door mounted test blocks for all current transformers in the switchgear shall be provided.

I. Potential Transformers

1. Potential transformers shall be indoor dry type, single-phase, 60 hertz.

2. Potential transformers shall have an accuracy classification determined according to ANSI Standards. The potential transformers shall be suitable for metering accuracy, the burden to be served for the required devices plus 20 percent, and shall meet the following minimum requirements:

   a. BIL: 10kV

   b. Primary Voltage: 480 volts

   c. Secondary Voltage: 120 volts

   d. Winding Ratio: 4:1

   e. Metering Accuracy Class: 0.3 at rated burden

3. Identify polarity with standard markings or symbols. Connect secondaries to potential buses as required. Protect potential transformers with primary and secondary fuses. Protect primary side with current-limiting fuses.

4. Door mounted test switches located at the switchgear. Test switch wiring shall be plainly marked to indicate the respective circuits to each pole of the switch. Test switches shall be ABB Flexitest Type FT-1 with clear cover, GE/Multilin equivalent, or equal.

J. Control Power Transformers

1. Provide 480 to 120 VAC control power transformers as required. Verify that control power transformers have adequate capacity for the load to be served.

2. Protect control power transformers with both primary and secondary fuses. Protect primary side with current limiting fuses. Provide a manual disconnect ahead of the primary fuses.

3. Control power transformers for space heaters, lighting, receptacles and other ancillary loads shall be separate from those used for control circuits.

K. Control Wiring and Control Terminal Blocks

1. Wire and factory test switchgear to satisfy the requirements of the operation described or necessary.

2. Switchgear secondary wiring shall be NEC Type SIS, single-conductor, stranded copper, rated 600 volts, 90°C bundled and secured with nylon ties. Provide flexible stranding for swinging doors and panels. Minimum wire size shall be No. 14 AWG for voltage transformer wiring, interlock wiring, and control circuit wiring. For current transformer circuits, minimum wire size shall be No. 12 AWG. Number 10 AWG or larger wire shall be used to decrease resistance as required.

3. Route outgoing control wires for outgoing or "cell-to-cell" interconnecting wiring to the master terminal blocks with suitable numbering strips numbered in agreement

with the manufacturer's detailed wiring diagrams. Provide a minimum of 10 percent (10%) spare terminal blocks for each circuit breaker and auxiliary compartment.

4. Terminal blocks for control wiring shall be provided in accordance with Section 16902, Electric Controls and Relays.

5. Number wiring with shrink-type tag devices at both ends consistent with the manufacturer's detailed wiring diagrams. Duplication of wire numbers and terminal block numbers is not acceptable.

6. One control power circuit cut-out device shall be furnished in each circuit breaker housing. If cut-out device has exposed conductors (i.e., knife switch), the exposed conductors shall be suitably protected against inadvertent contact.

L. Analog Indicating Instruments

1. Provide analog indicating instruments where shown on the Drawings. Instruments shall be door-mounted, and shall be in accordance with ANSI C39.1, 1 percent accuracy class, 4-1/2 inch nominal square, with 250 degrees scale unless otherwise noted.

2. Analog indicating instrument switches shall be door-mounted, rotary operated type with means for maintaining contact position. Contacts shall be silver-to-silver, enclosed in easily removable protective covers.

M. Control Devices

1. Furnish and install control devices as required and/or shown on the Drawings. The following control devices shall be provided as specified in Section 16902, Electric Controls and Relays:

   a. Pilot devices (switches, indicating lights, etc)

   b. Relays and timers

2. For each electrically operated circuit breaker, provide door-mounted circuit breaker pistol grip control switch with red (closed) and green (open) indicating lights to indicate breaker contact position. Provide amber indicating lights to indicate breaker lockout status and tripped status, and blue indicating lights for trip coil status monitor.

N. Nameplates

1. Provide engraved plastic nameplates to identify switchgear units, door mounted devices, and internal components.

2. Nameplates shall be as specified in Section 16195, Electrical - Identification engraved with the circuit number and circuit name as indicated on the Drawings.

3. Label the switchgear per the requirements of NEC, Articles 110-21 and 110-22.

O. Power Metering

1. Provide an IQ Analyzer 6000 as manufactured by Eaton. Power metering manufacturer shall match the manufacturer of the circuit breakers and other components of the switchgear assembly. Provide the quantity indicated on the Drawings.

2. Power meter shall be provided with 1GB of memory, minimum, and network communications port. A hardware gateway shall be provided in each half of the switchgear. Each hardware gateway shall convert the network communications from the respective meter to the EtherNet\IP protocol for communication of metering parameters to the plant control system. The following parameters shall be communicated as a minimum:

   - Current (all phases)
   - Voltage (all phases)
   - KW, KVAR, KVA
   - Power Factor

P. Warning Signs

1. Provide a minimum of 2 warning signs on the front of the switchgear lineup and 2 on the back.

   a. Red laminated plastic engraved with white letters approximately 1/2 inch high.

   b. Signs shall read "DANGER HIGH VOLTAGE"

Q. Source Quality Control

1. Completely assemble, wire, and test switchgear at the factory. Detailed inspections before and after assembly shall assure correctness of design and workmanship. Provide groups of wires leaving the shipping-assembled equipment with terminal blocks with suitable numbering strips.

2. After assembly, provide the switchgear with lifting channels having eyebolts for attachment of crane slings to facilitate lifting and handling each shipping-assembly unit. These lifting channels shall be removable after equipment is placed on permanent foundations.

R. Accessories

1. Switchgear accessories shall be provided as follows:

   a. Manual handles for operating circuit breakers.

b. One complete integral lifting device consisting of rails, hoist and dolly shall be furnished for each switchgear assembly for installing or removing breakers. The elevating table type lifting device is not acceptable.

c. Secondary couplers for operating a power circuit breaker in the DISCONNECTED position.

d. Auxiliary power module to provide power for testing the trip unit when the breaker is in the DISCONNECTED or REMOVED position.

e. Test plugs for draw-out relays and meters.

f. Auxiliary switches with at least two (2) unused normally open and two (2) unused normally closed contacts on each circuit breaker.

S. Control Sequence

1. It is the intent of this specification that the switchgear control system will control the main breaker, the generator breaker, and the generator. Alternatives to this proposed approach will only be acceptable if approved by the Engineer and the Owner. Modifications shall be made to the existing switchgear lineup and its respective controls as required to operate in conjunction with the new equipment provided as indicated herein.

a. Initial Conditions

i. Utility present. Main breaker closed and tie breaker open.

ii. Generator breaker open.

iii. Generator off.

iv. Feeder breakers closed.

b. Utility Power Failure

i. Initiate sequence when utility power source fails and the system control switch is in the auto mode.

ii. Open main breaker.

iii. Start generator.

iv. When generator voltage $\geq$ 460V and frequency is $59.5 \leq f \leq 60.5$, close generator breaker.

v. Supply plant load as required.

c. Return to Utility from Generator (open transition)

i. Initiate sequence automatically when utility bus voltage and frequency are 460V-510V, $59.5 \leq f \leq 60.5$ for an adjustable time delay, and the system control switch is in the Auto mode.

ii. Open the generator breaker. The generator shall then run in an unloaded cooldown mode for an adjustable time delay.

iii. Close the main breaker to supply plant load.

d. If tie breaker is closed, only one utility/generator pair of breakers can be active and only its respective transfer controller shall operate. The other transfer controller for the other breaker pair shall be electrically and mechanically interlocked in a way that it will not be operational to prevent paralleling multiple sources across the tie breaker.

2.03 SURGE PROTECTIVE DEVICES

A. The switchgear shall be furnished with integrated Type II surge protective devices (SPD). SPDs shall be provided in the location and quantity as shown on the Drawings.

B. The SPD shall be rated, designed, tested, listed, and labeled in accordance with UL-1449, edition.

C. The SPD shall be factory installed by the switchgear manufacturer using a direct bus connection. There shall be no cable connection between the bus bar and the SPD device.

D. The SPD shall have a fault current rating equal to or greater than that of the fault current rating of the switchgear. The SPD shall employ metal-oxide varistor (MOV) technology. If integral fusing is used, the fuses shall allow the maximum rated surge current to pass without fuse operation.

E. The SPD shall have a maximum continuous operating voltage (MCOV) of at least 115% of the nominal voltage of the switchgear. The Voltage Protection Rating (VPR) of each SPD shall <u>not exceed</u> the following:

SYSTEM VOLTAGE	L-N	L-G	L-L	N-G
208Y/120	700V	700V	1200V	700V
480Y/277	1200V	1200V	1800V	1200V
480 DELTA	N/A	1200V	2000V	N/A
240 DELTA	N/A	1200V	1200V	N/A
120/240	700V	700V	1200V	700V

F. The Nominal Discharge Current (I_n) of the SPD shall be 20kA. Peak surge current ratings <u>shall not</u> be used as a basis for applying the SPD to the system.

The surge current rating for each SPD shall be as indicated on the Drawings. Surge current ratings are indicated on single line diagrams. Surge current rating indicated is on a per phase basis.

G. Each SPD system shall provide surge protection in all possible modes. Surge protection shall be as follows:

SYSTEM CONFIGURATION	MODES OF PROTECTION	NUMBER OF MODES
3-Phase Wye	L-N, L-G, N-G	7
3-Phase Delta	L-L, L-G	6
3-Phase Impedence Grounded	L-L, L-G	6
Single-Phase	L-N, L-G, N-G	3

H. The SPD shall be furnished with an audible alarm and silence pushbutton, integral SPD status LEDs (one per phase), and a Form C dry contact for remote indication of alarm. A surge counter shall also be provided.

I. The SPD equipment shall be SPD Series by Eaton.

PART 3 -- EXECUTION

3.01 INSTALLATION

A. The switchgear shall be furnished and installed as shown on the Drawings and in accordance with the manufacturer's installation instructions. One (1) copy of these instructions shall be included with the equipment at time of shipment. The equipment shall be suitably protected and space heaters connected until accepted by the Owner.

B. Furnish and install structural mounting channels in accordance with manufacturer's recommendations to provide proper alignment of the units.

C. The equipment shall be installed and checked in accordance with the manufacturer's recommendations. This shall include but not limited to:

1. Checking to ensure that the pad location is level to within .125 inches.

2. Checking to ensure that all bus bars are torque to the manufacturer's recommendations.

3. Assemble all shipping sections, remove all shipping braces and connect all shipping split mechanical and electrical connections.

4. Secure assemblies to foundation or floor channels.

5. Inspect and install all circuit breakers in their proper compartments.

D. Install the switchgear to allow complete unit door swing required for unit removal. This is specifically required where a vertical section of switchgear is set next to a wall to the left of a switchgear section.

3.02 PAINTING

A. Prior to final completion of the work, all metal surfaces of the equipment shall be cleaned thoroughly, and all scratches and abrasions shall be retouched with the same coating as used for factory finishing coats.

3.03 TESTING

A. All tests shall be performed in accordance with the requirements of the General Conditions and Division 1. The following tests are required:

1. Witnessed Shop Tests

a. None required.

2. Certified Shop Tests and Reports

a. Submit description of proposed testing methods, procedures, and apparatus.

b. Submit notarized and certified copies of all test reports.

c. As a minimum, the entire switchgear assembly shall go through a quality inspection before shipment. This inspection shall include, but is not limited to, the following:

i. Physical inspection of the structure and the electrical conductors including bussing, general wiring, and units.

ii. General electrical tests including power circuit phasing, control circuit wiring, instrument transformers, meters, ground fault system, and device electrical operation.

iii. AC dielectric tests of the power circuits and control circuits.

iv. Markings/labels, including instructional type, Underwriters Laboratory (U.L.), and inspector's stamps.

d. The manufacturer shall use integral quality control checks throughout the manufacturing process to maintain the correctness of the switchgear.

3. Field Tests

a. Field tests shall be performed in accordance with requirements specified in the General Conditions, Division 1, and NETA Acceptance Testing Specifications, latest edition.

b. The manufacturer’s technical representative shall perform startup and functional testing of the switchgear controls. Functional testing shall include field verification of each and every part of the sequence of

operations listed herein. Representatives from the Owner and the Engineer shall be present to witness the functional testing.

c. Prior to commencement of the functional testing, a test plan shall be submitted for Owner and Engineer approval. Test plan shall demonstrate how each part of the sequence of operations will be tested, and shall detail any required outages, switchovers, or the like that must be performed during the testing.

3.04 SERVICES OF MANUFACTURER'S REPRESENTATIVE

A. The Contractor shall provide the services of a qualified, factory-trained manufacturer's technical representative who shall adequately supervise the installation and testing of all equipment furnished under this Contract. The manufacturer's representative shall certify in writing that the equipment has been installed in accordance with the manufacturer's recommendations. No further testing or equipment startup may take place until this certification is accepted by the Owner.

B. The manufacturer’s technical representative shall perform startup and functional testing of the switchgear and controls as specified herein.

C. The Contractor shall provide training for Owner personnel. Training shall be conducted by the manufacturer's factory-trained representative who shall instruct Owner personnel in operation and maintenance of <u>all equipment provided under this Section</u>. Training shall be provided for two (2) sessions of eight (8) hours each. Training shall not take place until after all switchgear units have been installed and energized. Training shall be at times coordinated with the Owner.

D. The services of the manufacturer's representative shall be provided for a period of not less than as follows:

1. One (1) trip of two (2) working days during the installation of the switchgear.

2. One (1) trip of two (2) working days for the testing and startup of the switchgear.

3. One (1) trip of five (5) working days to perform the functional testing of the entire switchgear assembly and controls.

4. One (1) trip of two (2) working days to perform training as specified herein.

5. One (1) trip of one (1) working day two (2) months before the warranty expiration to identify issues to be corrected under warranty.

E. Any additional time required to achieve successful installation and operation shall be at the expense of the Contractor.

3.05 FIELD ADJUSTMENTS

A. The protective relays and/or trip units shall be set in the field by a qualified representative of the manufacturer, or an outside testing company retained by the Contractor, in accordance with the settings designated in the coordination study. See Section 16000 – Basic Electrical Requirements.

- END OF SECTION -

SECTION 16440 - DISCONNECT SWITCHES

PART 1 -- GENERAL

1.01 THE REQUIREMENT

A. The Contractor shall furnish and install separately mounted, individual disconnect switches as specified herein and indicated on the Drawings.

B. Disconnect switches for process instruments are not included in the scope of this Section and shall be as specified in Section 16141 – Wiring Devices.

1.02 CODES AND STANDARDS

A. Disconnect switches shall be designed, manufactured, and/or listed to the following standards as applicable:

1. UL 98 – Enclosed and Dead-Front Switches

2. UL 1203 – Standard for Explosion-proof and Dust-ignition-proof Electrical Equipment for use in Hazardous (Classified) Locations.

3. NEMA 250 – Enclosures for Electrical Equipment

4. NEMA KS 1 – Heavy Duty Enclosed and Dead-Front Switches

1.03 SUBMITTALS

A. In accordance with the procedures and requirements set forth in the General Conditions and Section 01300, Submittals, the Contractor shall obtain from the equipment manufacturer and submit the following:

1. Shop Drawings

2. Spare Parts List

3. Each submittal shall be identified by the applicable specification section.

1.04 SHOP DRAWINGS

A. Each submittal shall be complete in all respects, incorporating all information and data listed herein and all additional information required for evaluation of the proposed equipment's compliance with the Contract Documents.

B. Partial, incomplete or illegible submittals will be returned to the Contractor without review for resubmittal.

C. Shop drawings shall include but not be limited to:

1. Product data sheets.

2. Complete layout and installation drawings with clearly marked dimensions for each type/size/rating of disconnect switch.

3. Assembled weight of each unit.

D. The shop drawing information shall be complete and organized in such a way that the Engineer can determine if the requirements of these Specifications are being met. Copies of technical bulletins, technical data sheets from "soft-cover" catalogs, and similar information which is "highlighted" or somehow identifies the specific equipment items that the Contractor intends to provide are acceptable and shall be submitted.

1.05 SPARE PARTS

A. The equipment shall be furnished with all spare parts as recommended by the equipment manufacturer.

B. One (1) complete set of spare fuses for each ampere rating installed shall be furnished and delivered to the Owner at the time of final inspection.

C. Spare parts lists, included with the shop drawing submittal, shall indicate specific sizes, quantities, and part numbers of the items to be furnished. Terms such as "1 lot of packing material" are not acceptable.

D. Parts shall be completely identified with a numerical system to facilitate parts inventory control and stocking. Each part shall be properly identified by a separate number. Those parts which are identical for more than one size, shall have the same parts number.

1.06 IDENTIFICATION

A. Each equipment item shall be identified with a nameplate. The nameplate shall be engraved indicating the circuit number and equipment name with which it is associated. Equipment identification shall be in accordance with Section 16195, Electrical - Identification.

PART 2 -- PRODUCTS

2.01 MANUFACTURERS

A. The equipment covered by this Specification is intended to be standard equipment of proven performance as manufactured by reputable concerns. Equipment shall be designed, constructed and installed in accordance with the best practices of the trade, and shall operate satisfactorily when installed as shown on the Drawings.

B. Switches shall be manufactured by the Square D Company, Eaton, the General Electric Company, or Siemens Energy and Automation, Inc.

2.02 DISCONNECT SWITCHES

A. Disconnect switches shall be heavy-duty type and/or as specified in these Specifications. Switches shall be furnished and installed as shown on the Drawings and as required by the NEC. Handles shall be lockable.

B. Disconnect switches for non-hazardous areas shall be UL 98 Listed. Disconnect switches for hazardous areas shall be UL 1203 Listed.

C. Switches shall meet NEMA Standard KS 1 type HD requirements, be, single-throw, be externally operated, and be fused or non-fused as indicated on the Drawings. Switches shall have the number of the poles, voltage, and ampere ratings as shown on the Drawings.

D. In non-hazardous locations, disconnect switches shall be furnished with the following enclosure type and material of construction, dependent upon the designation of the area in which they are to be installed. Area designations are indicated on the Drawings.

AREA DESIGNATION	**ENCLOSURE TYPE AND MATERIAL**
Indoor Wet Process Area	NEMA 4X, Type 304 Stainless Steel
Indoor Dry Process Area	NEMA 12, Painted Steel
Indoor Dry Non-process Area	NEMA 1, Painted Steel
Indoor Type 1 Chemical Storage/Transfer Area	NEMA 4X, Fiberglass
Indoor Type 2 Chemical Storage/Transfer Area	NEMA 4X, Type 304 Stainless Steel
All Outdoor Areas	NEMA 4X, Type 304 Stainless Steel

E. Disconnect switches shall be quick-make, quick-break and with an interlocked cover which cannot be opened when switch is in the "ON" position and capable of being locked in the "OPEN" position.

F. A complete set of fuses for all switches shall be furnished and installed as required. Time-current characteristic curves of fuses serving motors or connected in series with circuit breakers shall be coordinated for proper operation. Fuses shall have voltage rating not less than the circuit voltage.

G. Disconnect switches shall be furnished with a factory installed internal barrier kit that helps prevent accidental contact with live parts and provides “finger-safe” protection when the door of the enclosed switch is open.

H. Disconnect switches shall be furnished with a manufacturer-supplied ground lug kit for termination of equipment grounding conductors. Where a grounded (neutral) conductor is shown on the Drawings in the conduits connected to the disconnect switch, a manufacturer-supplied neutral bar shall be furnished for termination of the grounded conductors. Third party ground lug and neutral lug kits not supplied by the disconnect switch manufacturer are not acceptable.

I. Fused disconnect switches shall be furnished for motor operated valve and gate actuators where shown on the Drawings. The Contractor shall coordinate the supply of these fused

switches with the specific requirements of the actuator. Fuses with fast fault clearing times may be required for modulating valve actuators.

J. Disconnect switches for all motors connected to variable frequency drives (VFDs) shall be furnished with a factory installed electrical interlock kit that includes one (1) early-break auxiliary contact rated for 5A (minimum) at 120 VAC to be used to open the control circuit before the main switch blades break.

PART 3 -- EXECUTION

3.01 INSTALLATION

A. All disconnect switches shall be mounted five (5) feet above the floor or finished grade, at the equipment height where appropriate, or where shown otherwise.

B. Disconnect switches shall be provided in the enclosure type and material of construction required for the area in which it is installed. Reference the requirements in Part 2 herein, and the area designations indicated on the Drawings.

3.02 TESTING

A. All tests shall be performed in accordance with the requirements of the General Conditions and Division 1. The following tests are required:

1. Field Tests

a. Field testing shall be done in accordance with the requirements specified in the General Conditions, Division 1, and NETA Acceptance Testing Specifications, latest edition.

- END OF SECTION -

SECTION 16461 – DRY TYPE DISTRIBUTION TRANSFORMERS

PART 1 -- GENERAL

1.01 THE REQUIREMENT

A. The Contractor shall furnish, install, and test transformers for power and lighting distribution systems as specified herein, as indicated on the Drawings, and as required to complete the electrical installations.

B. All equipment specified in this Section shall be furnished by the transformer manufacturer who shall be responsible for the suitability and compatibility of all included equipment.

C. Reference Section 16000, Basic Electrical Requirements.

1.02 CODES AND STANDARDS

A. Transformers shall conform to all applicable Federal, UL, and NEMA standards. Materials and components shall be new and conform to grades, qualities and standards as specified herein and shown on the Drawings.

B. Transformers shall comply with the following standards:

1. UL 1561 – Dry Type General Purpose and Power Transformers

2. U.S. Department of Energy 2016 Efficiency

3. National Electrical Code

4. NEMA ST-20 – Dry Type Transformers for General Applications

5. ANSI C57 – Standard General Requirements for Dry Type Distribution and Power Transformers

1.03 SUBMITTALS

A. In accordance with the procedures and requirements set forth in the General Conditions and Division 1, the Contractor shall obtain from the equipment manufacturer and submit the following:

1. Shop Drawings.

2. Operation and Maintenance Manuals.

3. Spare Parts List.

4. Reports of Certified Shop Field Tests.

B. Each submittal shall be identified by the applicable specification section.

1.04 SHOP DRAWINGS

A. Each submittal shall be complete in all respects, incorporating all information and data listed herein, and all additional information required for evaluation of the proposed equipment's compliance with the Contract Documents.

B. Partial, incomplete, or illegible submittals will be returned to the Contractor without review for resubmittal.

C. Shop drawings shall include but not be limited to:

1. Product data sheets.

2. Drawings showing clearly marked dimensions and weight for each transformer.

3. Sample equipment nameplate diagram.

D. The submittal information shall reflect the specific equipment identification number as indicated on the Drawings.

E. The shop drawing information shall be complete and organized in such a way that the Engineer can determine if the requirements of these Specifications are being met. Copies of technical bulletins, technical data sheets from "soft-cover" catalogs, and similar information which is "highlighted" or somehow identifies the specific equipment items that the Contractor intends to provide are acceptable and shall be submitted.

1.05 OPERATION AND MAINTENANCE MANUALS

A. The Contractor shall submit operation and maintenance manuals in accordance with the procedures and requirements set forth in the General Conditions and Division 1.

1.06 SPARE PARTS

A. All spare parts as recommended by the equipment manufacturer shall be furnished to the Owner by the Contractor.

B. Spare parts lists, included with the Shop Drawing submittal, shall indicate specific sizes, quantities, and part numbers of the items to be furnished. Terms such as "1 lot of packing material" are not acceptable.

C. Parts shall be completely identified with a numerical system to facilitate parts inventory control and stocking. Each part shall be properly identified by a separate number. Those parts which are identical for more than one size, shall have the same parts number.

1.07 IDENTIFICATION

A. Each transformer shall be identified with the equipment item number indicated on the Contract Drawings and the accepted Shop Drawings. A nameplate shall be securely

affixed in a conspicuous place on each transformer. Nameplates shall be as specified in Section 16195, Electrical - Identification.

PART 2 -- PRODUCTS

2.01 MANUFACTURERS

A. The equipment covered by this Specification is intended to be standard equipment of proven performance as manufactured by reputable concerns. Equipment shall be designed, constructed and installed in accordance with the best practices of the trade, and shall operate satisfactorily when installed as shown on the Drawings.

B. Dry type distribution transformers shall be Energy Star compliant and manufactured by the Square D Company, the General Electric Company, Eaton, or Siemens Energy and Automation, Inc.

2.02 DRY TYPE TRANSFORMERS

A. Furnish and install single-phase and three-phase general purpose, dry-type transformers, as specified herein and indicated on the Drawings. The transformers shall be 60 Hz, self-cooled, quiet-design insulated of the two winding type.

B. The transformers shall be UL 1561 Listed.

C. The primary windings shall be rated 480 VAC for use on 3-phase systems and connected delta unless indicated otherwise on the Drawings. KVA ratings shall be as shown on the Drawings. Furnish transformers with two 2-1/2% primary taps above, and four 2-1/2% primary taps below rated voltage for transformers 15 KVA and above, and two 2-1/2% primary taps above, and two 2-1/2% primary taps below rated voltage for transformers less than 15 kVA. All taps shall be full capacity rated.

D. The ratings of the secondary windings shall be as indicated on the Drawings.

E. Transformers shall be designed for continuous operation at rated KVA, 24 hours a day, 365 days a year, with normal life expectancy as defined in IEEE 65 and ANSI C57.96. This performance shall be obtainable without exceeding 150 degrees Celsius average temperature rise by resistance or 180 degrees Celsius hot spot temperature rise in a 40 degrees Celsius maximum ambient and 30 degrees Celsius average ambient. The maximum coil hot spot temperature shall not exceed 220 degrees Celsius. All insulating materials shall be flame retardant and shall not support combustion as defined in ASTM Standard Test Method D 635. All insulating materials shall be in accordance with NEMA ST 20 Standard for a 220 degrees Celsius UL component recognized insulation system.

F. Transformer coils shall be of the continuous wound copper construction and shall be impregnated with non-hygroscopic, thermosetting varnish.

G. All cores are to be constructed of high grade, non-aging, grain-oriented silicon steel with high magnetic permeability and low hysteresis and eddy current loses. Magnetic flux densities are to be kept well below the saturation point. The core laminations shall be

tightly clamped and compressed with structural steel angles. The completed core and coil shall then be bolted to the base by means of vibration-absorbing mounts to minimize sound transmission. There shall be no metal-to-metal contact between the core and coil assembly and the enclosure.

H. All transformers shall be equipped with a wiring compartment suitable for conduit entry and large enough to allow convenient wiring. The maximum temperature of the enclosure shall not exceed 90 degrees Celsius. Transformers shall be furnished with lugs of the size and quantity required and suitable for termination of the field wiring.

I. The core of the transformer shall be visibly grounded to the enclosure by means of a flexible grounding conductor sized in accordance with applicable NEMA, IEEE, and ANSI standards.

J. Transformers shall have core and coil assemblies mounted on rubber isolation pads to minimize the sound levels. Transformers shall not exceed the sound levels listed in NEMA ST-20.

K. Transformers shall be furnished with the following enclosure type and material of construction, dependent upon the designation of the area in which they are to be installed. Area designations are indicated on the Drawings.

AREA DESIGNATION	**ENCLOSURE TYPE AND MATERIAL**
Indoor Wet Process Area	NEMA 3R, Painted Steel
Indoor Dry Process Area	NEMA 2, Painted Steel
Indoor Dry Non-process Area	NEMA 2, Painted Steel
All Outdoor Areas	NEMA 3R, Painted Steel

L. The enclosure shall be made of heavy gauge steel and shall be degreased, cleaned, primed, and finished with a baked weather-resistant enamel using the manufacturer's standard painting process. Color shall be ANSI 61.

2.03 DRIVE ISOLATION TRANSFORMERS

A. These transformers shall be of the commercially quiet, dry type consisting of 2 windings, and suitable for outdoor installation. The transformers shall conform to applicable NEMA, ANSI and IEEE standards. They shall be 3-phase, 60 Hz, 480V delta-connected primary and 480V secondary, wye or delta as indicated on the Drawings, KVA rating as shown on Drawings. There shall be 2 full capacity taps, one above and one below rated primary voltage. The continuous, full-load temperature rise shall not exceed 80°C above an ambient temperature of 40°C.

B. Transformers shall have coil bracing designed to minimize mechanical forces caused by SCR drive duty cycles and shall be designed to reduce line-pollution feedback caused by SCR firing circuits. The transformers shall be suitable for use with the variable frequency drives (VFD's) included in this project.

2.04 ISOLATION TRANSFORMERS

A. Furnish and install three-phase (drive) isolation-type, dry, enclosed, epoxy encapsulated transformers of the voltage and KVA ratings as specified herein and indicated on the Drawings. The transformers shall be 60 Hz, self-cooled, quiet-design insulated of the two winding type. The transformers shall be designed for use with AC/DC Drive applications and labeled as such.

B. The transformers shall be Underwriters Laboratories, Inc. listed and shall bear the UL label.

C. Transformer coils shall be of the continuous wound copper construction and shall be impregnated with non-hygroscopic, thermosetting varnish.

D. Primary Winding Taps:

1. 7.5 - 20 KVA:

   a. 1-5% above normal full capacity.

   b. 1-5% below normal full capacity.

2. 27 - 750 KVA:

   a. 2 - 2.5% above normal full capacity.

   b. 2 - 2.5% below normal full capacity.

3. All taps shall be full capacity rated.

E. Transformers shall be designed for continuous operation at rated KVA, 24 hours a day, 365 days a year, with normal life expectancy as defined in IEEE 65 and ANSI C57.96. This performance shall be obtainable without exceeding 150 degrees Celsius average temperature rise by resistance or 180 degrees Celsius hot spot temperature rise in a 40 degrees Celsius maximum ambient and 30 degrees Celsius average ambient. The maximum coil hot spot temperature shall not exceed 220 degrees Celsius. All insulating materials shall be flame retardant and shall not support combustion as defined in ASTM Standard Test Method D 635. All insulating materials shall be in accordance with NEMA ST 20 Standard for a 220 degrees Celsius UL component recognized insulation system.

F. Transformers shall be furnished with the following enclosure type and material of construction, dependent upon the designation of the area in which they are to be installed. Area designations are indicated on the Drawings.

AREA DESIGNATION	**ENCLOSURE TYPE AND MATERIAL**
Indoor Wet Process Area	NEMA 3R, Painted Steel
Indoor Dry Process Area	NEMA 2, Painted Steel
Indoor Dry Non-process Area	NEMA 2, Painted Steel
All Outdoor Areas	NEMA 3R, Painted Steel

G. The enclosure shall be made of heavy gauge steel and shall be degreased, cleaned, primed, and finished with a baked weather-resistant enamel using the manufacturer's standard painting process. Color shall be ANSI 61.

H. Transformers shall incorporate an electrostatic shield for the attenuation of voltage spikes, line noise, and transients.

I. Transformers shall operate at audible sound levels below NEMA standard ST-20.

PART 3 -- EXECUTION

3.01 INSTALLATION

A. The transformers shall be furnished and installed as shown on the Drawings and as recommended by the equipment manufacturer.

B. Conduit routed to and from the transformer shall be arranged for easy removal of the transformer access covers.

C. Where transformers 50 kVA and smaller are shown to be wall mounted, a transformer manufacturer supplied wall mounting kit shall be used. The lowest point of the wall mounting bracket shall be no lower than 7'-0" above the finished floor. Field fabricated mounting hardware is not acceptable unless reviewed and approved in writing by the Engineer.

D. Prior to final completion of the work, all metal surfaces of the equipment shall be cleaned thoroughly, and all scratches and abrasions shall be retouched with the same lacquer as used for shop finishing coats.

3.02 TESTING

A. All tests shall be performed in accordance with the requirements of the General Conditions and Division 1. The following tests are required:

1. Certified Shop Tests

   a. The transformers shall be given routine factory tests in accordance with the requirements of the ANSI and NEMA standards. Temperature rises may be certified from basic design.

   b. As a minimum, the following tests shall be made on all transformers:

      i. Ratio tests on the rated voltage connection and on all tap connections.
      ii. Polarity and phase-relation tests on the rated voltage connection.
      iii. Applied potential tests.
      iv. Induced potential tests.
      v. No-load and excitation current at rated voltage on the rated voltage connection.

2. Field Tests

a. Field testing shall be done in accordance with the requirements specified in the General Conditions, Division 1, and NETA Acceptance Testing Specifications, latest edition.

b. Insulation between windings shall be tested by 1000 VDC Megaohmeter for one (1) minute. Resistance value shall be no less than 100 Megaohms.

- END OF SECTION -

SECTION 16470 – PANELBOARDS

PART 1 -- GENERAL

1.01 THE REQUIREMENT

A. The Contractor shall furnish and install panelboards of voltage and current ratings as specified herein and indicated on the Drawings. Panelboards shall be furnished with circuit breaker ratings, number of breakers, number of poles and locations conforming to the panelboard schedules on the Drawings.

B. Reference Section 16000, Basic Electrical Requirements; and Section 16195, Electrical Identification.

1.02 CODES AND STANDARDS

A. Panelboards shall be designed, manufactured, and/or listed to the following standards as applicable:

1. Underwriters Laboratories

   a. UL 50 – Enclosures for Electrical Equipment, Non-environmental Considerations

   b. UL 67 – Standard for Panelboards

   c. UL 489 - Molded Case Circuit Breakers, Molded Case Switches, and Circuit Breaker Enclosures

   d. UL 943 – Ground Fault Circuit Interrupters

2. NEMA PB1 - Panelboards

3. National Electrical Contractors Association (NECA) Standard 407 – Standard for Installing and Maintaining Panelboards

1.03 SUBMITTALS

A. In accordance with the procedures and requirements set forth in the General Conditions and Section 01300, Submittals, the Contractor shall obtain from the equipment manufacturer and submit the following:

1. Shop Drawings.

2. Spare Parts List.

3. Operation and Maintenance Manuals.

4. Reports of Field Tests.

B. Each submittal shall be identified by the applicable specification section.

1.04 SHOP DRAWINGS

A. Each submittal shall be complete in all respects, incorporating all information and data listed herein and all additional information required for evaluation of the proposed equipment's compliance with the Contract Documents.

B. Partial, incomplete, or illegible submittals will be returned to the Contractor without review for resubmittal.

C. Shop drawings shall include but not be limited to:

1. Product data sheets.

2. Complete assembly, layout, and installation drawings with clearly marked dimensions for each panelboard.

3. Complete panelboard schedules indicating circuit designations as shown on the Drawings for each panelboard.

4. The submittal information shall reflect the specific equipment identification number as indicated on the Drawings.

1.05 OPERATIONS AND MAINTENANCE MANUALS

A. The Contractor shall submit operation and maintenance manuals in accordance with the procedures and requirements set forth in the General Conditions and Division 1. The manuals shall include:

1. Instruction books and/or leaflets.

2. Recommended spare parts list.

3. Final as-built construction drawings included in the shop drawings incorporating all changes made in the manufacturing process and during field installation.

1.06 SPARE PARTS

A. For each panelboard, the Contractor shall furnish to the Owner all spare parts as recommended by the equipment manufacturer. All spaces in the panelboards shall be furnished with a spare breaker as indicated in the panelboard schedules shown on the Drawings.

B. Spare parts lists shall indicate specific sizes, quantities, and part numbers of the items to be furnished. Terms such as "1 lot of packing material" are not acceptable.

C. Parts shall be completely identified with a numerical system to facilitate parts inventory control and stocking. Each part shall be properly identified by a separate number. Those parts which are identical for more than one size shall have the same parts number.

1.07 IDENTIFICATION

A. Each panelboard shall be identified with the identification name/number indicated on the Drawings. A nameplate shall be securely affixed in a conspicuous place on each panelboard. Nameplates shall be as specified in Section 16195, Electrical - Identification.

PART 2 -- PRODUCTS

2.01 MANUFACTURERS

A. The Equipment shall be designed, constructed and installed in accordance with the best practices of the trade, and shall operate satisfactorily when installed as shown on the Drawings.

2.02 CONDUCTORS (MAIN BUS AND BRANCH CONNECTORS)

A. All main bus shall be copper sized in accordance with UL standards to limit the temperature rise on any current carrying part to a maximum of 50 degrees C above a maximum ambient temperature of 40 degrees C.

2.03 LIGHTING PANELBOARDS

A. General

1. Lighting panelboards shall be dead-front type with automatic trip-free, non-adjustable, thermal-overload, branch circuit breakers. Panelboards shall be of the configuration and rating as specified herein and indicated on the Drawings. Panelboards shall be UL 67 Listed and shall be constructed to NEMA PB1 standards. Panelboards shall be service entrance rated where indicated on the Drawings.

2. Lighting panelboards shall be equipped with a main breaker or main lugs complete with branch circuit breakers, as indicated on the Drawings. The panelboards shall be suitable for flush or surface mounting.

3. Lighting panelboards shall be fully rated and shall have a minimum short circuit rating of 22,000 amperes symmetrical, unless otherwise indicated on the Drawings.

4. Lighting panelboards shall be Eaton Pow-R-Line Series, the Square D Company equivalent, the General Electric Company equivalent, or Siemens Energy and Automation, Inc. equivalent.

B. Enclosures

1. Enclosures shall be UL 50 listed and have a NEMA rating as indicated on the Drawings. An Underwriter's Laboratories, Inc. inspection label shall appear on the interior of the cabinet. Enclosures designated as NEMA 4X shall be constructed of 304 stainless steel. Enclosures with all other NEMA ratings shall be constructed

of No. 12 U.S.S. code gauge galvanized steel, painted ANSI #61 light gray. The enclosure shall have wiring gutters on sides and shall be at least 5-3/4 inches deep.

2. The door shall be fastened to the enclosure with concealed hinges and shall be equipped with flush-type catches and locks. The Contractor shall equip cabinet doors exceeding 40 inches in height with vertical bolt three point locking mechanism. All locks shall be keyed alike. The panelboard trim shall have a removable hinge assembly, in addition to the door hinge, that allows work inside the enclosure without the need to remove the trim.

3. The panelboard shall be provided with an information label. The information label shall include the panelboard designation, voltage, phase, wires, and bus rating.

C. Bus Work

1. Main bus bars shall be of ample size so that a current density of not more than 1000 amperes per square inch of cross section will be attained. This current density shall be based on the application of the full load connected to the panel plus approximately 25% of the full load for spare capacity. The main bus shall be full capacity as based on the preceding for the entire length of the panel so as to provide full flexibility of circuit arrangement.

2. Solid neutral bus bars are required and neutral bus ampacity shall be the same as the main bus bars unless otherwise noted. Ratings shall be in accordance with applicable standards.

3. A separate ground bus shall be provided with lugs for termination of equipment grounding conductors.

4. Branch bus work shall be rated to match the maximum branch circuit breaker which may be installed in the standard space.

5. All bus shall be tin plated copper and shall extend the entire useable length of the panelboard, including spaces.

D. Circuit Breakers

1. Circuit breakers shall be bolt-on, molded-case type and UL 489 Listed. All circuit breakers shall have quick-make, quick-break, toggle mechanism for manual as well as automatic operation. Tandem or half-size circuit breakers are not acceptable.

2. Where indicated on the Drawings, or where required by Code, circuit breakers shall be equipped with integrally mounted ground fault interrupters complete with "TEST" push button and shall be of a type which fit standard panelboard spaces for the breaker continuous current rating required. Ground fault circuit interrupter style circuit breakers shall be UL 943 Listed. Circuit breakers used for lighting circuit switching shall be approved for the purpose and shall be marked "SWD".

Where required by Article 440 of the NEC, circuit breakers installed for air conditioning units shall be HACR type.

3. Circuit breaker voltage ratings shall meet or exceed the panelboard voltage indicated on the Drawings. Trip elements of circuit breakers shall be 20A unless otherwise indicated on the Drawings. Circuit breakers shall have an interrupting rating at 240 VAC that matches the panelboard short circuit rating.

4. Main circuit breakers shall be individually mounted. Branch mounted circuit breakers are not acceptable unless specifically indicated on the panel schedules. Coordinate top or bottom mounting of main circuit breaker with incoming conduit location.

5. Where indicated on the Drawings, branch circuit breakers shall be provided with a padlockable hasp or handle padlock attachment for padlocking in the off position as required to meet the NEC requirement for disconnecting means and/or OSHA lock-out/tagout standard. Locking hardware shall remain in place even when the packlock is removed. Branch circuit breakers shall be provided with a similar lock-on device where indicated on the Drawings.

E. Directories

1. Approved directories with noncombustible plastic cover, and with typewritten designations of each branch circuit, shall be furnished and installed in each panelboard. The Contractor shall maintain in each panel, during the duration of the Contract, a handwritten directory clearly indicating the circuit breakers in service. This directory shall be updated as work progresses, and final, typewritten directories, as specified above, shall be installed at the end of the project. Designations and circuit locations shall conform to the panelboard schedules on the Drawings, except as otherwise authorized by the Engineer.

2.04 POWER DISTRIBUTION PANELBOARDS

A. General

1. Power distribution panelboards shall be of the configuration and rating as specified herein and as indicated on the Drawings. The panelboards shall be dead-front type with automatic trip-free, non-adjustable, thermal overload branch circuit breakers. Panelboards shall be UL 67 Listed and shall be constructed to NEMA PB1 standards. Panelboards shall be service entrance rated where indicated on the Drawings.

2. Power panelboards shall be equipped with a main breaker or main lugs complete with branch circuit breakers as indicated on the Drawings. The panelboards shall be suitable for flush or surface mounting.

3. Power distribution panelboards shall be fully rated and shall have a minimum short circuit rating of 65,000 amperes symmetrical unless otherwise indicated on the Drawings.

4. Power distribution panelboards shall be Eaton Pow-R-Line Series, the Square D Company equivalent, the General Electric Company equivalent, or Siemens Energy and Automation, Inc. equivalent.

B. Enclosures

1. Enclosures shall be UL 50 listed and have a NEMA rating as indicated on the Drawings. An Underwriter's Laboratories, Inc. inspection label shall appear on the interior of the cabinet. Enclosures designated as NEMA 4X shall be constructed of 304 stainless steel. Enclosures with all other NEMA ratings shall be constructed of No. 12 U.S.S. code gauge galvanized steel, painted ANSI #61 light gray. The enclosure shall have wiring gutters on sides and shall be at least 5-3/4 inches deep.

2. The door shall be fastened to the enclosure with concealed hinges and shall be equipped with flush-type catches and locks. The Contractor shall equip cabinet doors exceeding 40 inches in height with vertical bolt three point locking mechanism. All locks shall be keyed alike. The panelboard trim shall have a removable hinge assembly, in addition to the door hinge, that allows work inside the enclosure without the need to remove the trim.

3. The panelboard shall be provided with an information label. The information label shall include the panelboard designation, voltage, phase, wires, and bus rating.

C. Bus Work

1. Main bus bars shall be of ample size so that a current density of not more than 1,000 amperes per square inch of cross section will be attained. This current density shall be based on the application of the full load connected to the panel plus approximately 25% of the full load for spare capacity. The main bus shall be full capacity as based on the preceding for the entire length of the panel so as to provide full flexibility of circuit arrangement.

2. Solid neutral bus bars, where required, shall be provided. Neutral bus shall have the same ampacity as the main bus, unless otherwise indicated. Ratings shall be in accordance with applicable standards.

3. A separate ground bus shall be provided with lugs for termination of equipment grounding conductors.

4. Branch bus work shall be rated to match the maximum branch circuit breaker which may be installed in the standard space.

5. All bus shall be tin plated copper and shall extend the entire useable length of the panelboard, including spaces. Panelboards Listed and Labeled as a four-wire panel shall not be used in place of a three-wire panel where a neutral conductor does not exist in the supply conductors to that panel.

D. Circuit Breakers

1. Circuit breakers shall be bolt-on, molded-case type and UL 489 Listed. All circuit breakers shall have quick-make, quick-break, toggle mechanism for manual as well as automatic operation.

2. Circuit breakers used for lighting circuit switching shall be approved for the purpose and shall be marked “SWD” where required by Article 440 by the NEC. Circuit breakers installed for air conditioning units shall be HACR type.

3. Circuit breaker voltage rating shall meet or exceed the panelboard voltage indicated on the Drawings. Trip elements of circuit breakers shall be 20A, unless otherwise indicated on the Drawings. Circuit breakers shall have an interrupting rating at 480 VAC that matches the panelboard short circuit rating.

4. Main circuit breakers shall be individually mounted. Branch mounted circuit breakers are not acceptable unless specifically indicated on the panel schedules. Coordinate top or bottom mounting of main circuit breaker with incoming conduit location.

5. Where indicated on the Drawings, branch circuit breakers shall be provided with a padlockable hasp or handle padlock attachment for padlocking in the off position as required to meet the NEC requirement for disconnecting means and/or OSHA lock-out/tagout standard. Locking hardware shall remain in place even when the packlock is removed. Branch circuit breakers shall be provided with a similar lock-on device where indicated on the Drawings.

E. Directories

1. Approved directories with noncombustible plastic cover, and with typewritten designations of each branch circuit, shall be provided in each panel. The Contractor shall maintain in each panel, during the duration of the Contract, a handwritten directory clearly indicating the circuit breakers in service. This directory shall be updated as work progresses, and final, typewritten directories, as specified above, shall be installed at the end of the project. Designations and circuit locations shall conform to the panelboard schedules on the Drawings, except as otherwise authorized by the Engineer.

2.05 SURGE PROTECTIVE DEVICES

A. The panelboards shall be furnished with integrated Type II surge protective devices (SPD). SPDs shall be provided in the location and quantity as shown on the Drawings. SPD shall be installed within the panelboard enclosure in a location that allows the required quantity and rating of branch circuit breakers to be installed. Reducing the quantity of branch circuit breakers to less than that required by the panel schedules is not acceptable.

B. The SPD shall be rated, designed, tested, listed, and labeled in accordance with UL-1449, latest edition.

C. The SPD shall be factory installed by the panelboard manufacturer using a direct bus connection. There shall be no cable connection between the bus bar and the SPD device.

D. The SPD shall have a fault current rating equal to or greater than that of the fault current rating of the panelboard. The SPD shall employ metal-oxide varistor (MOV) technology. If integral fusing is used, the fuses shall allow the maximum rated surge current to pass without fuse operation.

E. The SPD shall have a maximum continuous operating voltage (MCOV) of at least 115% of the nominal voltage of the panelboard. The Voltage Protection Rating (VPR) of each SPD shall not exceed the following:

SYSTEM VOLTAGE	L-N	L-G	L-L	N-G
208Y/120	700V	700V	1200V	700V
480Y/277	1200V	1200V	1800V	1200V
480 DELTA	N/A	1200V	2000V	N/A
240 DELTA	N/A	1200V	1200V	N/A
120/240	700V	700V	1200V	700V

F. The Nominal Discharge Current (In) of the SPD shall be 20kA. Peak surge current ratings shall not be used as a basis for applying the SPD to the system.

G. The surge current rating for each SPD shall be as indicated on the Drawings. Surge current ratings are indicated in panel schedules. Surge current rating indicated is on a per phase basis.

H. Each SPD system shall provide surge protection in all possible modes. Surge protection shall be as follows:

SYSTEM CONFIGURATION	MODES OF PROTECTION	NUMBER OF MODES
3-Phase Wye	L-N, L-G, N-G	7
3-Phase Delta	L-L, L-G	6
3-Phase Impedence Grounded	L-L, L-G	6
Single-Phase	L-N, L-G, N-G	3

I. The SPD shall be furnished with an audible alarm and silence pushbutton, integral SPD status LEDs (one per phase), and a Form C dry contact for remote indication of alarm. A surge counter shall also be provided.

J. The SPD equipment shall be SPD Series by Eaton, SurgeLogic by the Square D Company, Tranquell by the General Electric Company, Siemens Energy and Automation Inc. equivalent, or equal.

PART 3 -- EXECUTION

3.01 INSTALLATION

A. Panelboards shall be furnished and installed as shown on the Drawings and as recommended by the equipment manufacturer, and as required by NECA 407.

B. Panelboards shall be set true and plumb in locations as shown on the Drawings. The top of panelboard enclosure shall not exceed six (6) feet above finished floor elevation.

C. Enclosures shall not be fastened to concrete or masonry surfaces with wooden plugs. Appropriate cadmium plated or galvanized steel bolts shall be used with expansion shields or other metallic type concrete insert for mounting on concrete or solid masonry walls. Cadmium plated or galvanized steel toggle bolts shall be used for mounting on concrete block or other hollow masonry walls. Bolt diameter shall be as required considering the size and weight of the completed panelboard and enclosure to provide adequate structural support.

D. The Contractor shall not use factory furnished knockouts with surface mounted back boxes. The Contractor shall punch or drill required openings during installation and shall equip flush mounted back boxes with manufacturer's standard pattern of knockouts.

E. The Contractor shall install cabinets (and other enclosure products) in plumb with the building construction. Flush mounted enclosures shall be installed so that the trim will rest against the surrounding surface material and around the entire perimeter of the enclosure.

F. Bus loads in all panelboards shall be balanced between phases to within a tolerance of one (1) KVA. Convenience receptacles shall be distributed evenly among all phase buses as much as practical.

G. Prior to final completion of the work, all metal surfaces of the equipment shall be cleaned thoroughly, and all scratches and abrasions shall be retouched with the same lacquer as used for shop finishing coats.

3.02 TESTING

A. All tests shall be performed in accordance with the requirements of the General Conditions and Division 1. The following tests are required:

1. Field Tests

a. Prior to termination of any conductors to the circuit breakers , all bus work and circuit breakers shall be tested from phase to phase and phase to ground with a 1000 VDC megaohmeter for 1 minute in accordance with NECA 407. Resistance values shall be recorded and shall not be less than 100 megohms.

b. Prior to terminating any wires to the circuit breakers, the resistance of the connection between the bus work and each circuit breaker shall be tested through the use of a low-resistance ohmmeter. Record the resistance values for each circuit breaker.

- END OF SECTION -

SECTION 16495 - VARIABLE FREQUENCY DRIVE SYSTEMS

PART 1 -- GENERAL

1.01 THE REQUIREMENT

A. The Contractor shall furnish, install, connect, test and place in satisfactory operating condition all variable frequency drives (VFD's) as specified herein and indicated on the Drawings.

B. Reference Section 16000, Basic Electrical Requirements, and Section 16902, Electric Controls and Relays.

C. The Contractor is responsible for coordinating with the pump manufacturer to ensure that the VFD is sized properly to meet all of the requirements herein. The Contractor is responsible for including any costs related to equipment upsizing, conduit and wire upsizing, etc. that results from selecting equipment with a higher full load amp rating than was specified or used as the basis for design.

1.02 SUBMITTALS

A. In accordance with the procedures and requirements set forth in General Conditions and Section 01300, Submittals, the Contractor shall obtain from the equipment manufacturer and submit the following:

1. Shop Drawings

2 Harmonic Study Report

3 Operation and Maintenance Manuals

4. Spare Parts List

5. Reports of Certified Shop and Field Tests

6. Manufacturer's Field Start-up Report

7. Manufacturer's Representative's Installation Certification

B. Each submittal shall be identified by the applicable specification section.

1.03 SHOP DRAWINGS

A. Each submittal shall be complete in all respects, incorporating all information and data listed herein and all additional information required for evaluation of the proposed equipment's compliance with the Contract Documents.

B. Partial, incomplete, or illegible submittals will be returned to the Contractor without review for resubmittal.

C. Shop drawings for each VFD shall include but not be limited to:

1. Layout drawings of the variable frequency drive system that include all cabinet or enclosure dimensions, access details, and weights.

2. Layout drawings of panels or enclosures showing size, arrangement, color, and nameplates. Drawings shall include the physical arrangement of door mounted devices located on the variable frequency drive enclosure. Sufficient detail shall be provided for locating conduit stub-ups. General "catalog data sheet" layout drawings which are not specific to the systems specified herein are not acceptable.

3. Custom schematic and interconnection wiring diagrams of all electrical work, including terminal blocks and identification numbers, wire numbers and wire colors. Standard schematics and wiring diagrams that are not custom created by the manufacturer for the variable frequency drives for this project are not acceptable. These drawings shall be circuit specific for each motor-load combination (e.g. Well Transfer Pump, etc.). Indicate all devices, regardless of their physical location, on these diagrams. Specific equipment names consistent with the Drawings shall appear on each respective diagram.

4. Complete single line diagrams indicating all devices comprising the variable frequency drive system including, but not limited to, circuit breakers, motor circuit protectors, contactors, instrument transformers, meters, relays, timers, control devices, and other equipment comprising the complete system. Electrical ratings of all equipment and devices shall be clearly indicated on these single line diagrams.

5. Complete Bills of Material and catalog data sheets for all equipment and devices comprising the variable frequency drive system.

6. Confirmation of spare parts requirements as specified herein.

7. Documented data regarding output reactors and filters, if provided.

8. A Compliance, Deviations, and Exceptions (CD&E) letter. If the shop drawings are submitted without this CD&E letter, the submittal will be rejected. The letter shall include all comments, deviations and exceptions taken to the Drawings and Specifications by the Contractor AND Equipment Manufacturer/Supplier. This letter shall include a copy of this specification section. In the left margin beside each and every paragraph/item, a letter "C", "D", or "E" shall be typed or written in. The letter "C" shall be for full compliance with the requirement. The letter "D" shall be for a deviation from the requirement. The letter "E" shall be for taking exception to a requirement. Any requirements with the letter "D" or "E" beside them shall be provided with a full typewritten explanation of the deviation/exception. Handwritten explanation of the deviations/exceptions is not acceptable. The CD&E letter shall also address deviations, and exceptions taken to each Drawing related to this Specification Section.

D. The shop drawing information shall be completed and organized in such a way that the Engineer can determine if the requirements of these Specifications are being met. Copies of technical bulletins, technical data sheets from "Soft Cover" catalogs, and similar information which is "highlighted" or somehow identifies the specific equipment items the Contractor intends to provide are to provide are acceptable and shall be submitted.

E. Prior to completion and final acceptance of the project, the Contractor shall furnish and install "as-built" wiring diagrams for each VFD. These final drawings shall be plastic laminated and securely placed inside each VFD and starter door and included in the O&M manuals.

F. Product Data shall include, but not be limited to:

1. Functional diagrams that identify major system functional blocks and interfaces.

2. Special requirements or restrictions of the motor-load combination that may result from operation on the variable frequency drive system.

G. Programming Guides and Manuals shall be submitted. If the variable frequency drive systems require computer software or configuration, provide copies of all programming guides/manuals.

H. Harmonic Study and Data shall include but not be limited to:

1. Report of Harmonic Study to determine the harmonic distortion present in the voltage and current waveforms on motor terminals and in the electrical distribution system(s) caused by the variable frequency drive system as specified herein.

2. Voltage and current waveforms supplied by variable frequency drive at the motor leads.

3. Necessary descriptions regarding calculation method, assumptions, values and notations, basis for input information, manufacturer's harmonic content data, and calculation results interpretation.

1.04 OPERATIONS AND MAINTENANCE MANUALS

A. The Contractor shall submit operation and maintenance manuals in accordance with the procedures and requirements set forth in the General Conditions, Section 01300, Submittals and Section 11000, Equipment - General Provisions.

1.05 SUPPLIES, AND SPARE PARTS

A. The VFD's and accessories shall be furnished with all spare parts as recommended by the equipment manufacturer shall be furnished by the Contractor to the Owner.

B. In addition to the manufacturer recommended spare parts, the Contractor shall furnish the following spare parts:

1. One (1) set of all power and control fuses for each variable frequency drive.

2. For 60HP and below, supply (1) spare VFD for each horsepower size (i.e. one VFD for all 15hp applications, one VFD for 30hp applications, etc). Only the base VFD unit itself shall be provided as spare, no spare control relays, keypads, enclosures, etc. are required.

3. For applications above 60HP supply one fully functional main control circuit board for each horsepower size of variable frequency drive.

4. For applications above 60HP supply one of each inverter power semiconductor for each horsepower size of variable frequency drive.

5. Spare auxiliary equipment as specified in Article 2.10.

C. The spare parts shall be packed in containers suitable for long term storage, bearing labels clearly designating the contents and the pieces of equipment for which they are intended.

D. Spare parts shall be delivered at the same time as the equipment to which they pertain. The Contractor shall properly store and safeguard such spare parts until completion of the Work, at which time they shall be delivered to the Owner.

E. Spare parts lists, included with the shop drawing submittal shall indicate specific sizes, quantities, and part numbers of the items to be furnished. Terms such as "1 lot of packing material" are not acceptable.

F. Parts shall be completely identified with a numerical system to facilitate parts inventory control and stocking. Each part shall be properly identified by a separate number. Those parts which are identical for more than one size, shall have the same parts number.

1.06 IDENTIFICATION

A. Each VFD shall be identified by the circuit number and equipment name as indicated on the Drawings. A nameplate shall be securely affixed in a conspicuous place on each VFD. Nameplates shall be as specified in Section 16195, Electrical - Identification.

1.07 WARRANTY

A. Contractor shall warrant that the material and workmanship of all components and the operation of the variable frequency drive system and auxiliary equipment is in accordance with the latest design practices and meets the requirements of this Specification.

B. Warranty work shall include, but not be limited to, the following:

1. Replace components found to be faulty and make changes in equipment arrangement or adjustments necessary to meet the equipment or functional requirements or this Specification.

2. Warranty shall include system rewiring and substitution and rebuilt or additional equipment required during trial operation or subsequent operation of the unit during the period of this warranty.

3. Warranty shall be in effect for a period of 24 months following final acceptance of the system.

1.08 CONSTRUCTION SEQUENCING

A. The Contractor shall reference Section 01520, Maintenance of Utility Operations During Construction, of these Specifications.

PART 2 -- PRODUCTS

2.01 MANUFACTURERS

A. The equipment covered by this Specification is intended to be standard equipment of proven performance. Equipment shall be designed, constructed, and installed in accordance with the best practices of the trade, and shall operate satisfactorily when installed as shown on the Drawings.

B. Unless otherwise specified herein or indicated on the Drawings, it is the intent of these specifications that the VFDs be provided as stand-alone motor control equipment.

C. The Contractor shall obtain the VFD's from one manufacturer who shall also manufacture the enclosure and major equipment components. The manufacturer shall have a minimum of five years' experience in the manufacture of similar units and shall have a general distribution to the electrical trade. Subcontracting of wiring will not be acceptable.

D. The VFDs shall be Powerflex 750 series as manufactured by Allen Bradley, CPX-9000 as manufactured by Eaton, or Altivar 61 as manufactured by the Square D Company. No substitutions allowed. The VFDs shall be 18 pulse as indicated on the Drawings.

E. Motor control circuits shall be wired in accordance with the requirements specified herein and/or indicated on the Drawings.

F. Variable frequency drive manufacturer shall be responsible for the successful application and operation of the entire drive and control system serving the motor and driven equipment. This includes the responsibility for obtaining all load, torque, speed and performance requirements from the respective sources and integrating these into a variable frequency drive system that fulfills the requirements of this Specification.

G. The Contractor and variable frequency drive system manufacturer are cautioned regarding the review and compliance with the total Contract Documents. Typical examples are circuit breakers, motor circuit protectors, magnetic starters, relays, timers, control and instrumentation products, pilot devices including pushbuttons, selector switches and pilot lights, enclosures, conduit, disconnect switches, terminal boxes, and other equipment.

2.02 PRODUCT REQUIREMENTS

A. Variable speed drives shall be adjustable frequency, adjustable voltage, pulse width modulated (PWM) design. The units shall be microprocessor controlled, fully digitally

programmable, and capable of precise and repeatable speed regulation of three phase 480 volt AC NEMA Design B induction motors. Variable frequency drives for other than NEMA Design B induction motors (e.g. NEMA Design C) shall be coordinated with the requirements of that respective load.

Drive units shall perform continuous self-diagnostics as well as load and drive self-check on startup.

B. All drives shall have permanently mounted programming and display modules. These modules shall provide programming access to all drive parameters, display all fault codes to assist with diagnostics and provide a display of output speed in percent or load.

C. This specification describes variable speed motor control which includes the design, fabrication, testing, installation and support requirements for variable frequency drive systems for 3-phase, squirrel cage rotor, induction motors driving pumps.

D. Each variable frequency drive to be a complete alternating current electric drive system including hardware, software, technical data, and spare parts necessary to accomplish variable speed operation of an induction motor and load combination in accordance with the requirements as indicated on the Drawings and as described in these Specifications. Contractor shall refer to Section 17950 of the Specifications and Instrumentation Drawings for a functional control description of each variable frequency drive system.

E. Variable frequency drive system manufacturer shall be responsible for the design and performance of the entire drive system and shall either manufacture all items of equipment or supply them using coordinated specifications furnished to the original equipment manufacturers to insure compatibility and performance in accordance with this Specification. Variable frequency drive manufacturer shall coordinate with suppliers of the drive motors and driven equipment. Motors shall be as specified in Section 15170 and other specific equipment Sections of the Specifications.

F. Variable frequency drive system shall be suitable for operation as part of a 480 VAC, 3-phase, 60 Hertz power distribution system. The complete variable frequency drive system shall withstand the mechanical forces exerted during short circuit conditions when connected directly to a power source having available fault current of 65,000 amperes symmetrical at rated voltage.

G. The variable frequency drive system shall be suitable to operate, at times, on a limited power source engine-generator set. The system shall be provided with equipment and devices to prevent waveform distortion as specified herein.

H. Provide control and sequence logic as specified herein and indicated on the Drawings. Control and sequence logic shall be designed such that the motor-load combination can be operated in the manual mode upon control and sequence logic failure, including all necessary personnel and equipment safety interlocks.

I. Design each variable frequency drive motor drive speed control system so that through simple programming by either factory engineers or Owner's trained operating personnel, specific control and protection functions can be attained.

2.03 DESIGN REQUIREMENTS

A. Each variable frequency drive system shall meet the requirements of this Specification without derating any of the induction motor operating parameters including service factor and nameplate horsepower. The variable frequency drive system manufacturer shall specifically identify special requirements or restrictions of the motor-load combination that may result from operation on the variable frequency drive system.

B. The variable frequency drive shall consist of a 6 or 18 pulse diode semiconductor rectifier system, direct current link, and pulse width modulated inverter. The inverter shall invert the direct current voltage into an alternating current voltage at a frequency which shall be proportional to the desired speed. This alternating current voltage and frequency shall both vary simultaneously at a constant "Volts-Per-Hertz" ratio to operate the induction motor at the desired speed.

C. Variable frequency drive shall operate from fixed frequency power supply and convert this input power into variable speed induction motor shaft power as required by this Specification. Provide each variable frequency drive with an input disconnecting means as indicated on the Drawings which shall be padlockable. Include the necessary drive controllers and input/output contactors to accomplish the intended control of the variable frequency drive system. Provide line reactors where indicated on the Drawings.

D. The drive shall operate the motor and produce full rated nameplate horsepower at the motor output shaft without exceeding motor nameplate full load current and with the motor not exceeding rated total temperature not including the additional temperature increment that constitutes the motor service factor. Motor shall retain its service factor when operated by the variable frequency drive.

E. The overall drive system efficiency shall be a minimum of 95 percent when operating the specified motor-load combination at rated voltage, frequency, and current.

This efficiency shall be calculated as follows:

$$\text{Efficiency (\%)} = \frac{\text{Power (Load)}}{\text{Power (Supply)}} \times 100$$

F. Power (Load) is the total 3-phase power delivered to the motor, measured at the output terminals of the drive system, including output filters or transformers. Power (Supply) is the total electrical power delivered to the drive system, measured at the input terminals of the variable frequency drive including input filters, line reactors, isolation transformers, or other harmonic distortion suppression equipment. Include power input required for auxiliary equipment (e.g., controls, fans, air conditioning, pumps) for complete system operating in this Power (Supply) total.

G. Variable frequency drive shall provide smooth, stepless changes in motor speed and acceleration over the entire operating speed range from minimum to maximum speed (revolutions per minute). The variable frequency drive shall be provided with maximum and minimum frequency limits.

H. Variable frequency drive system to maintain a desired output frequency (setpoint) with a steady state accuracy of 0.5 percent of rated frequency of 60 Hertz for a 24 hour period.

I. Variable frequency drive to have an automatic current limit feature to control motor currents during startup and provide a "soft start" torque profile for the motor-load combination. The variable frequency drive shall also limit current due to motor winding or motor lead phase-to-phase short circuit or phase-to-ground short circuit. The current limit protection setting shall be field adjustable.

J. Variable frequency drive shall be furnished with programmable electronic overload and torque limits.

K. Drive system shall achieve a desired output frequency (setpoint) with a repeatability of 0.1 percent of rated frequency of 60 Hertz.

L. Drive system to be capable of operating the specified load continuously at any speed within the operating speed range of 10 percent to 100 percent of rated speed. The minimum and maximum continuous operating speeds shall each be adjustable within this speed range. The variable frequency drive shall provide for field adjustment of these setpoints.

M. Drive system controls to be microprocessor-based and have controlled linear acceleration capability to ramp up the speed, revolutions per minute, of the motor-load combination from the minimum selected operating speed to the maximum selected operating speed in a minimum of 30 seconds. Provide two (2) field-adjustable speed setpoints for the variable frequency drive to skip equipment resonant frequencies. Provide controlled linear deceleration capability. The acceleration and deceleration time limits shall be field adjustable to values up to 120 seconds.

N. Voltage or current unbalance between phases of the variable frequency drive output voltage shall not exceed 3 percent of the instantaneous values. The variable frequency drive system shall continuously monitor the output voltages and generate an alarm condition when the unbalance exceeds 3 percent. The system shall detect and generate a separate alarm for loss of any output phase voltage (single phasing). Phase unbalance shall be as defined by NEMA Standard MG-1.

O. Variable frequency drive system to operate continuously without interruption of service or damage to equipment during transient input voltage variations of plus or minus 10 percent for a duration of 15 cycles. Unacceptable voltage fluctuations on the supply bus shall cause under or overvoltage protection to trip and remove supply voltage from the drive system. Variable frequency drive output voltage regulation shall be plus or minus 2 percent.

The variable frequency drive system shall be furnished with line surge protection.

P. **The Contractor shall size variable frequency drive system and components to provide, continuously, motor load current equal to 120 percent of the motor nameplate full load current.**

The Contractor is fully responsible for the review of the Drawings to determine specified motor speed, horsepower and full load amperes.

Q. The audible noise (sound pressure) level of a motor when operated from no load to full load with the variable frequency drive described herein shall not increase more than 5 decibels (dbA), at 5 feet in any direction from the motor, above its noise level when operated from a utility power source without the variable frequency drive.

R. Variable frequency drives shall be provided with output reactors where indicated on the Drawings or filters to prevent elevated voltage levels at the motor terminals. Filters or output reactors shall be provided by the VFD manufacturer if the cable length between the VFD and the motor is expected to cause elevated voltage levels at the motor terminals that exceed the ratings of the inverter duty rated motor winding insulation. VFD manufacturer shall provide output reactors or filters unless it can be proven to the Engineer in writing that the devices are unnecessary.

S. VFD circuitry shall be designed such that the cooling fans only run when the VFD is producing and output. Designs that allow the VFD cooling fans to run continuously when the VFD is energized but not producing an output are not acceptable.

2.04 OPERATING CONDITIONS

A. The following operating conditions are applicable for all equipment of this Specification.

1. Humidity: 0-95 percent.

2. Ambient Temperature: 0 degrees Celsius to plus 40 degrees Celsius.

3. Altitude: up to 3,300 feet

4. Power Supply: 480 volts, 3-phase, 60 Hertz.

5. Available Short Circuit Duty: as specified herein.

2.05 SYSTEM FEATURES AND CHARACTERISTICS

A. Controls and indicators to accomplish operation and maintenance shall be located on the variable frequency drive equipment assembly as specified herein and indicated on the Drawings. A Human Machine Interface (HMI) shall be furnished to provide controls and indicators to accomplish maintenance and operational functions as specified herein and shown on the Drawings. The HMI shall be password protected after startup to lock out un-authorized personnel from making changes. As a minimum, each VFD shall provide indication of the following:

1. Input Voltage

2. Output Voltage

3. Output Current

4. Output Frequency

5. Output Speed: 0-100%

6. Alarm Read-out: Display

B. Each VFD shall be provided with automatic and manual controls as shown on the Drawings and as required to comply with all Specifications.

C. Variable frequency drive system shall provide a 4-20 mADC output signal that is proportional to the drive output frequency for use as speed feedback or control and remote speed indication.

D. Variable frequency drive system shall accept a 4-20 mADC input command signal to control the output frequency in the automatic and/or manual control modes as specified herein or indicated on the Drawings. The system shall accept the input increase/decrease command with a resolution that permits incremental changes in speed, revolutions per minute, equal to or less than 0.1 percent of rated speed.

E. When operating in the automatic mode, the variable frequency drive system shall shut down during a power outage. Upon restoration of normal power and after an adjustable time delay (0-2 minutes; motor has coasted to zero speed and there is no backspin), the variable frequency drive system shall automatically restart and then ramp up to speed as required by the control system. The process operator shall not be required to reset the system manually after a shutdown caused by a power outage.

F. Variable frequency drive shall be furnished with a multiple attempt restart feature.

G. Furnish a door mounted speed potentiometer where shown on the Drawings.

H. Provide a circuit breaker with shunt trip coil and current-limiting fuses (if required) for each variable frequency drive. Provide each variable frequency drive with its respective drive controller for each motor.

I. Include in each variable frequency drive system an automatic trip feature which will remove the drive output from the motor and allow it to decelerate safely. This automatic system shall trip and indicate the fault only upon the following conditions:

1. Output voltage unbalance (trip threshold field set).

2. Open phase.

3. Motor overload.

4. Motor stator winding fault (phase-to-ground, phase-to-phase).

5. Loss of input power to the variable frequency drive or unacceptable voltage variation.

6. High variable frequency drive equipment temperature.

7. Variable frequency drive system failure as determined by the manufacturer.

8. Component failure.

9. Overcurrent.

10. Undercurrent.

J. Provide each variable frequency drive system with transmitted and received radio interference protection. In addition, provide protection against starting a rotating motor, both directions (coasting to zero speed and backspin). In the event that a motor automatic restart feature (catch the motor "on-the-fly") is provided in the drive controller as standard, this feature shall be capable of being disabled.

K. Variable frequency drive design shall include on-line diagnostics, with an automatic self-check feature that will detect a variable frequency drive failure which in turn affects motor operation and generates an alarm contact output rated for 125 VDC suitable for interfacing with the control system.

1. Diagnostics shall operate a visual alarm indicator that is visible on the variable frequency drive equipment cabinets without opening the cabinet doors.

2. Diagnostics shall provide an easily readable output that will isolate a failure.

3. Provide an event and diagnostic recorder to printout in narrative English of the specific fault(s) and the sequence in which the faults occurred. An indication of the "First Out" failure is a minimum for fault sequence detection.

4. Provide a normally open dry contact for each alarm function to enable remote indication.

5. Each VFD shall communicate power monitoring parameters to the plant control system via EtherNet\IP protocol. Provide any necessary hardware gateways to provide this communication capability. The following parameters, at a minimum, shall be communicated:

- Current (all phases)
- Voltage (all phases)
- KW, KVAR, KVA
- Power Factor

2.06 ENCLOSURES

A. Unless otherwise specified or indicated on the Drawings, the variable frequency drive enclosures shall be NEMA 1, force ventilated, dead-front, with front accessibility. Design enclosures for bottom or top entry of cables as required. Design variable frequency drive system so that rear cabinet access is not required for operations, maintenance, and repair tasks. Other enclosure requirements are:

1. Industrial use enclosures shall be as manufactured by Hoffman, Rittal, or equal. At the manufacturer's option, a standard motor control center section enclosure may be used. However, the motor control center section shall be a stand-alone unit with no horizontal buswork inside and shall otherwise meet all other requirements herein. **Integrating VFDs into a motor control center assembly is not acceptable.**

3. Finish exterior of the enclosures in ANSI-61 gray enamel or furnish in a color to match the complete line-up of equipment as indicated on the Drawings and accepted by the Engineer.

4. The doors shall have full length piano type hinges.

5. Brace each door to prevent sag when fully open.

6. The Contractor shall reference the Drawings for maximum dimensions of the VFDs. **No exceptions to the dimensions indicated on the Drawings are permitted.**

B. Furnish each variable frequency drive system with the control and indicating devices as specified herein and as indicated on the Drawings. Furnish main circuit breakers with an external operating handle interlocked with the door so that the door cannot be opened unless the disconnect is in the OFF position.

C. Electrical bus, including ground bus, shall be tin-plated copper. Power and control wiring shall be copper, color coded and identified in accordance with these Specifications.

D. Equipment shall be of modular construction allowing normal maintenance and repair to be done with ordinary hand tools. Design and install power electronic component assemblies so that, where practicable, components can be individually removed and replaced.

2.07 HARMONIC DISTORTION SUPPRESSION

A. A comprehensive pre-equipment-selection harmonic study shall be prepared by the Contractor. The results of this pre-equipment selection study shall be submitted to the Engineer as part of the submittals specified herein. Should this study indicate the need for additional tuned filters, line reactors, isolation transformers, or other harmonic distortion suppression equipment, these shall be supplied and included in the Bid. Indicate the location of the harmonic suppression equipment in the submittal data. Location is subject to acceptance by the Engineer.

B. The harmonic distortion values resulting from operation of all or any variable frequency drive-driven motor-load combinations operating at full load shall be as defined in IEEE Standard 519.

1. Maximum allowable total harmonic voltage distortion (THD): 5 percent of the fundamental.

2. Maximum allowable individual frequency harmonic voltage distortion: within the limits of IEEE standard 519.

3. Maximum allowable total demand distortion (TDD): within the limits of IEEE Standard 519-1992, Table 10.3.

4. Maximum allowable individual frequency harmonic demand distortion: within the limits of IEEE Standard 519-1992, Table 10.3.

5. The harmonic distortion levels shall be specific to the "Point of Common Coupling" (PCC) as defined in IEEE Standard 519. Unless otherwise indicated on the Drawings, the PCC shall be at the primary terminals of the step down transformer serving the main low voltage distribution equipment that supplies the VFDs.

C. System single line diagrams and field access to the plant site will be provided to the Contractor for the purpose of providing this study. Contractor shall obtain from others other information that may be necessary to perform this study. Input data and other pertinent information used in harmonic study shall be coordinated by the Contractor with the following:

1. Input data/information/results of the short circuit fault analysis specified herein.

2. Electrical system configuration and electrical equipment shop drawing submittal data including, but not being limited to new non-linear loads, new linear loads, and new capacitors.

D. The Contractor shall field measure actual harmonic distortion and verify with tests performed by an independent authority acceptable to the Owner after satisfactory full-load operation.

2.08 MISCELLANEOUS

A. Encapsulate critical components in ceramic or metal.

B. Auxiliaries, including fans, that are required for rated load operation at maximum ambient temperature, shall be 100 percent redundant. A new and unused spare replacement fan(s) or air conditioning unit(s), shipped in original carton, may be acceptable.

C. Circuit boards and electrical components shall meet the corrosion protection requirements specified in these Specifications. Varnished or epoxy encapsulated circuit boards and tropicalized contactors suitable for corrosive environments shall be furnished.

PART 3 -- EXECUTION

3.01 INSTALLATION

A. The VFD's shall be installed as shown on the Drawings and in accordance with the manufacturer's installation instructions.

B. Install VFD's to allow complete door swing required for component removal.

3.02 TESTING

A. All tests shall be performed in accordance with the requirements of the General Conditions and Division 1. The following tests are required:

1. Witnessed Shop Tests

   a. None required.

2. Certified Shop Tests and Reports

   a. Submit description of proposed testing methods, procedures, and apparatus.

   b. Factory test the complete variable frequency drive system in accordance with IEEE and NEMA standards with these Specifications. In addition, the variable frequency drive system shall be tested for efficiency as defined in this Specification. The VFD shall be powered up into a short circuit condition to confirm that the VFDs built-in feature that checks for a shorted condition when a start command is initiated results in a faulted condition.

   c. Variable frequency drive system components, including power transistors, GTOs, SCRs, IGBT's, diodes shall be 100 percent inspected and tested using manufacturer standard test procedures. Printed circuit boards shall be tested using the manufacturer's standard 'run-in' test method.

   d. After the specified inspections and tests have been successfully completed, the variable frequency drive system shall undergo an 8 hour system load test where the VFD operates on an appropriately sized dynamometer.

   e. Submit factory bench-test data to indicate that the manufacturer's proposed equipment has been tested in the specified arrangement and found to achieve specified accuracy.

   f. Acceptance of a shop test does not relieve Contractor from requirements to meet field installation tests under specified operating conditions, nor does the inspection relieve the Contractor of responsibilities.

   g. Submit signed and dated certification that all of the factory inspection and testing procedures described herein have been successfully performed by the Contractor prior to shipment.

3. Field Tests

   a. Field testing shall be done in accordance with the requirements specified in the General Conditions, Division 1, and NETA Acceptance Testing Specifications, latest edition.

3.03 SERVICES OF MANUFACTURER'S REPRESENTATIVE

A. The Contractor shall provide the services of a qualified manufacturer's factory-trained technical representative who shall adequately supervise the installation and startup of all equipment furnished under this Contract. The manufacturer's representative shall certify in writing that the equipment has been installed in accordance with the manufacturer's recommendations. No further testing or equipment startup may take place until this certification is accepted by the Owner.

B. The manufacturer’s technical representative shall perform all startup and field acceptance testing as specified herein.

C. The Contractor shall provide training for the Owner’s personnel. Training shall be conducted by the manufacturer's factory-trained representative who shall instruct Owner’s personnel in operation and maintenance of all equipment provided under this Section. Training shall be provided for two (2) sessions of four (4) hours each. Training shall not take place until after the VFDs have been installed and tested. Training shall be conducted at times coordinated with the Owner.

D. The services of the manufacturer's representative shall be provided for a period of not less than as follows:

1. Two (2) trips of two (2) working days during installation of the motor controllers.

2. Two (2) trips of two (2) working days to perform startup and field acceptance testing of the motor controllers.

3. One (1) trip of one (1) working day to perform training as specified herein.

E. Any additional time required to achieve successful installation and operation shall be at the expense of the Contractor.

3.04 TRAINING

A. The Contractor shall provide training for Owner personnel. Training shall be conducted by the manufacturer's factory trained specialists who shall instruct Owner personnel in operation and maintenance of all equipment provided under this Section.

B. Provide the services of an experienced, factory trained technician or service engineer of the variable frequency drive manufacturer at the jobsite for minimum of 2 days for training of Owner personnel, beginning at a date mutually agreeable to the Contractor and the Owner. The technician shall be on duty at the site for at least 8 hours per day and shall be available 24 hours per day when required to advice concerning special problems with equipment and systems.

C. Include in the bid the training of personnel in the operation and maintenance of each furnished variable frequency drive pump control system. For the purpose of this training section of the Specifications, a system is by definition a group of pumps or equipment which all serve a common function (e.g. Primary Sludge Pumps, RAS pumps, etc.). Training shall include at least one session for 2 designated employees for each system.

3.05 PAINTING

A. Prior to final completion of the work, all metal surfaces of the equipment shall be cleaned thoroughly, and all scratches and abrasions shall be retouched with the same coating as used for factory finishing coats.

- END OF SECTION –

SECTION 16500 - LIGHTING

PART 1 -- GENERAL

1.01 THE REQUIREMENT

A. The Contractor shall furnish and install all lighting fixtures, labor, and material, in accordance with the preceding Specifications, the requirements of this Section, and as shown on the Drawings.

B. Lighting shall be in accordance with the latest requirements of the Illuminating Engineering Society, and all lighting fixtures shall have the Underwriters Laboratories, Inc. label of approval.

C. All wiring shall be placed in conduit and shall comply with the Specifications for conduit, outlet boxes, pull and junction boxes, wires and cables, grounding, and other Sections as set forth in these Specifications and as noted herein.

D. Reference Section 16000, Basic Electrical Requirements, and Section 16170, Grounding and Bonding.

1.02 CODES AND STANDARDS

A. The equipment specified herein shall comply with the following codes and standards, where applicable.

1. Underwriter's Laboratories, Inc. (UL):

    a. UL 924 – Emergency Lighting and Power Equipment

    b. UL 935 – Fluorescent Lamp Ballasts

    c. UL 844 – Luminaires for Use in Hazardous (Classified) Locations

    d. UL 1029 – High Intensity Discharge Lamp Ballasts

    e. UL 1598 – Luminaires

2. American National Standards Institute (ANSI):

    a. ANSI C82.11 – High Frequency Fluorescent Lamp Ballasts

    b. ANSI C62.41 – Guide for Surge Voltages in Low-Voltage AC Power Circuits

3. National Electrical Code (NEC), latest edition.

1.03 SUBMITTALS

A. In accordance with the procedures and requirements set forth in the General Conditions and Section 01300, Submittals, the Contractor shall obtain from the equipment manufacturer and submit the following:

1. Shop Drawings

2. Operation and Maintenance Manuals

3. Spare Parts Lists

B. Each submittal shall be identified by the applicable specification section.

1.04 SHOP DRAWINGS

A. Each submittal shall be complete in all respects, incorporating all information and data listed herein and all additional information required for evaluation of the proposed equipment's compliance with the Contract Documents.

B. Partial, incomplete or illegible submittals will be returned to the Contractor for resubmittal without review.

C. Shop drawings shall include but not be limited to:

1. Product data sheets.

2. Catalog cuts for each fixture type showing performance and construction details of standard fixtures, and complete working drawings showing all proposed construction details of special or modified standard fixtures.

3. Photometric curves.

4. Lamp and LED data including efficiency (Efficacy lumens/watt) information.

5. LED Driver information

6. Catalog data including applicable coefficients of utilization tables, isolux chart of illumination on a horizontal plane, beam efficiency, horizontal and vertical beam spread, and beam lumens.

7. Manufacturer’s warranty information

8. Custom wiring diagrams for each individual lighting contactor. Standard wiring diagrams that are not custom created by the manufacturer for the individual lighting contactors for this project are not acceptable. One wiring diagram which is typical for all lighting contactors is not acceptable. Each wiring diagram shall include wire identification and terminal numbers. Indicate <u>all</u> devices, regardless of their physical location, on the diagrams. Identify on each respective wiring diagram

specific equipment names and equipment numbers consistent with those indicated on the Drawings.

9. System (entire fixture assembly) efficiency data.

10. Pole calculations.

D. Shop drawings shall be submitted to the Engineer for review and acceptance for all fixtures before fixtures and poles are manufactured. Substitutions will be permitted only if acceptable to the Engineer.

E. Manufacturer's catalog number and description in the fixture schedule on the Contract Documents establishes a level of quality, style, finish, etc. The use of a catalog number describing the various types of fixtures shall be used as a guide only, and does not exclude all the required accessories or hardware that may be required for a complete installation.

1.05 OPERATION AND MAINTENANCE MANUALS

A. The Contractor shall submit Operation and Maintenance Manuals in accordance with the procedures and requirements set forth in the General Conditions and Division 1.

1.06 SPARE PARTS

A. All spare parts as recommended by the equipment manufacturer shall be furnished to the Owner by the Contractor. The following minimum spare parts shall be furnished:

1. A minimum of one (1) LED driver for every ten (10) drivers (of the same type) installed.

B. The spare parts shall be packed in containers suitable for long term storage, bearing labels clearly designating the contents and the pieces of equipment for which they are intended.

C. Spare parts shall be delivered at the same time as the equipment to which they pertain. The Contractor shall properly store and safeguard such spare parts until completion of the work, at which time they shall be delivered to the Owner.

D. Spare parts lists, included with the shop drawing submittal, shall indicate specific sizes, quantities, and part numbers of the items to be furnished. Terms such as "1 lot of packing material" are not acceptable.

E. Parts shall be completely identified with a numerical system to facilitate parts inventory control and stocking. Each part shall be properly identified by a separate number. Those parts which are identical for more than one size, shall have the same parts number.

1.07 WARRANTY

A. The manufacturer's warranty shall in no event be for a period of less than five (5) years from date of delivery of fixtures to the project site and shall include repair labor, travel expense necessary for repairs at the jobsite, shipping costs, expendables used during the course of repair, or complete replacement of the failed lighting unit.

B. Warranty for LED fixtures shall be provided for the entire fixture and shall include all parts and accessories. Warranty for non-LED fixtures shall be provided for the entire fixture and shall include all parts and accessories except the replaceable bulb. Submittals received without written warranties as specified shall be rejected in their entirety.

PART 2 -- PRODUCTS

2.01 MANUFACTURERS

A. The equipment covered by this Specification is intended to be standard equipment of proven performance as manufactured by reputable concerns. Equipment shall be designed, constructed, and installed in accordance with the best practices of the trade, and shall operate satisfactorily when installed as shown on the Drawings.

2.02 FIXTURES

A. Each fixture shall bear the Underwriters Laboratories, Inc. label. All lighting fixtures shall be furnished complete with lamps of the size and type as indicated on the Drawings and all fittings and hardware necessary for a complete installation. Lighting fixtures shall have all parts and fittings necessary to completely and properly install the fixtures.

B. Fixture leads shall be as required by NEC and shall be grounded by the equipment grounding conductor in the conduit.

C. All glassware shall be high quality, homogeneous in texture, uniform in quality, free from defects, of uniform thickness throughout, and properly annealed. Edges shall be well rounded and free from chips or rough edges.

D. Emergency fixtures shall be UL 924 listed and have a minimum 90 minutes battery back-up.

E. Fixtures specified to be damp or wet locations rated shall be UL 1598 listed.

F. Fixtures shall be as specified in the fixture schedule below.

FIXTURE TYPE	LAMP/ FIXTURE WATTAGE	DESCRIPTION	MFR AND MODEL
EW2	3.8W	Wall mounted, emergency fixture 120VAC with 9.6 VDC nickel cadmium battery, gray polycarbonate housing, time delay shutoff, surge and brown out protection, and low battery cut-off. Two 1.9 Watt high intensity LED lamps heads. Wet Location Listed.	Holophane Desoto DM30, Series

XW1	1.5W	Wall-mounted, red LED exit sign, 120-277VAC, brushed aluminum faceplate, die cast aluminum housing, single/double face as indicated on the drawings, nickel cadmium battery with self-diagnostics, brownout and surge protected, damp location Listed.	Holophane Magellan MEX Series
LC1	39W (max)	Ceiling-mounted, 120-277VAC, LED light fixture, color temperature of 4100K, lineal ribbed frosted acrylic lens, spread distribution, gasketed fiberglass housing, stainless steel latches, 4ft, 6000 lumen minimum, and wet location Listed.	Holophane EMS LED Series
LL5	150W (max)	Pole-mounted, 120-277VAC, LED light fixture, color temperature of 4000K, prismatic borosilicate glass lens, 5 LED modules, 5X5 distribution, 700mA driver, 10000 lumen minimum, black die cast aluminum housing, wet location Listed. Round, black, base mounted, straight, 10ft. anodized aluminum pole.	Holophane Predator PSLED Series

2.02 LED DRIVERS

A. Drivers shall have a voltage range of (120-277) +/- 10% at a frequency 60Hz.

B. All drivers shall be designed to a power factor >90% with a total harmonic distortion THD <20% at full load.

C. Case temperature shall be rated for -40°C through +80°C.

D. Drivers shall have overheat protection, self-limited short circuit protection and overload protected.

E. Drivers shall be furnished with a fused primary.

F. Drivers shall have an output current ripple <30%

G. Drivers shall be manufactured by Advance, Universal or equal.

H. Drivers shall be UL Listed for damp location, UL1012, UL935, ROHS.

I. Drivers shall meet FCC 47 Sub Part 15.

J. All drivers shall be provided with ANSI/IEEE C62.41 Category C (10kV/5kA) surge protection.

2.03 LEDs

A. Luminaires provided with LED technology shall utilize high brightness LEDs with a group binning code of P and/or Q.

B. Color Temperature: as specified in fixture schedule.

C. Junction point shall be designed and manufactured to allow adequate heat dissipation.

D. LEDs shall be rated for 50,000 hours of life, minimum (based on IESNA L70).

2.08 POLES

A. Poles shall be designed to withstand calculated wind force based on wind velocity in accordance with the provisions of the Florida Building Code.

B. Pole mounted fixtures shall be mounted on poles as designated in the fixture schedule or as indicated on the Drawings. Poles shall have adequate handholes and weatherproof receptacles where indicated. All anchor bolts and nuts shall be stainless steel.

PART 3 -- EXECUTION

3.01 INSTALLATION

A. Lighting fixtures shall be located symmetrically with building lines as shown on the Drawings. The Contractor shall furnish and install the lighting fixtures to allow "convenient" access for maintenance such as cleaning, relamping, and other activities. The fixtures shall be installed to be accessed by a 12 ft. (max.) ladder. Where fixtures are shown in locations on the Drawings where maintenance would be difficult, the Contractor shall notify the Engineer for direction.

B. The Contractor shall provide and install all inserts, conduit, structural supports as required, lamps, ballasts, poles, wiring, and any other items required for a complete system. Contractor shall properly adjust and test, to the satisfaction of the Engineer, the entire lighting system. The Contractor shall provide pigtails and flexible conduit connected to an outlet box where necessary or required resulting in a neat and complete installation.

C. The Contractor shall protect all fixtures at all times from damage, dirt, dust, and the like. Before final acceptance, all fixtures and devices shall be cleaned of all dust, dirt or other material, be fully re-lamped (except LED fixtures) and in operating condition to the satisfaction of the Engineer.

D. The Contractor shall furnish and install all pendant trapezes and pendant stem hangers with durable swivel or equivalent trapeze hanger permitting normal fixture motion and self-alignment. Fixture pendants shall be Appleton Type UNJ ball type flexible hanger at the fixture and supports from an Appleton JBLX junction box with JBLX hub cover, or equal. Pendant lengths shall be adequate and adjusted to provide uniformity of installation heights above the reference datum. Stems shall be one-piece, with matching canopies and fittings.

E. The finish or exposed metal parts of lighting fixtures and finish trims of all recessed lighting fixtures shall be as directed by the Engineer.

F. The Contractor shall furnish and install all boxes for lighting fixtures such that the box is not the sole support of the fixture. The boxes shall be offset to allow maintenance such that access to wiring within the box can be attained without having to consider supporting (holding) the fixture.

G. All lighting units, when installed, shall be set true and be free of light leaks, warps, dents, and other irregularities. All hangers, cables, supports, channels, and brackets of all kinds for safely erecting this equipment in place, shall be furnished and erected in place by the Contractor.

H. The Contractor shall install fixtures at mounting heights indicated on the Drawings or as instructed by the Engineer. In areas with exposed ducts and/or piping, installation of lighting fixtures shall be adapted to field conditions as determined by the Engineer.

I. The Contractor shall support each fixture securely. Each fixture shall be secured to the building structure. The Contractor shall not secure fixtures to the work of other trades, unless specified or noted otherwise, and shall not support fixtures from plaster. The Contractor shall furnish and install all steel members and supports as required to fasten and suspend fixtures from the structure.

J. In all mechanical equipment areas, the Contractor shall install lighting fixtures on the ceiling after all piping and equipment therein has been installed. Exact locations for such fixtures may be determined by the Engineer on the site during the course of the work.

K. Upon completion of work, and after the building area is broom clean, all fixtures shall be made clean and free of dust and all other foreign matter both on visible surfaces, and on surfaces that affect the lighting performance of the fixture including diffusers, lenses, louvers, reflectors, and lamps.

L. All fixtures that require physical adjustment shall be so adjusted in accordance with the directions of the Engineer. The Contractor shall also adjust angular direction of fixtures and/or lamps, as directed.

M. Relamping access of fixtures including LED fixtures shall require no special tools. All optical control surfaces such as lenses and reflectors shall be safely and securely attached to fixtures and shall be easily and quickly removed and replaced for cleaning without the use of special tools. No fixture part that may be removed, for maintenance, shall be held in place by metal tabs that must be bent to remove said part.

N. The Contractor shall furnish and install time switches and photocells as specified herein or indicated on the Drawings. Time switches shall be provided with a manual bypass switch controlling the lights locally and remotely. Time switches shall control contactors, relays, or direct controlling of one, two, or three lighting circuits, as indicated. The Contractor shall furnish and install photocells as specified herein or indicated on the Drawings for automatic "ON/OFF" switching of outdoor lighting.

O. The Contractor shall furnish and install a concrete foundation for the pole mounted fixtures as indicated on the Drawings and as required. This applies to foundations for pole mounted fixtures located in the yard (i.e. site lighting) and foundations that are part of a

structure (e.g. filters). Foundation shall be designed and approved by a professional structural engineer currently registered in the State of Florida. The wind design shall be in accordance with ASCE 7 and the Florida Building Code. Pole structure/foundation shall be able to handle fixture/pole weight and withstand wind velocity of up to 110 MPH with a 1.3 gust factor. Provide calculations signed and sealed by a Professional Structural Engineer for review.

O. One (1), ¾" diameter, 10'-0" long ground rod, furnish in accordance with Section 16170, shall be driven adjacent to each pole. The pole, anchor bolts, steel reinforcement bar in the base, and equipment grounding conductor shall all be bonded to the ground rod as indicated in the standard details.

3.02 TESTING

A. All tests shall be performed in accordance with the requirements of the General Conditions and Division 1. The following tests are required:

1. Certified Shop Tests

a. The lighting fixtures shall be given routine factory tests in accordance with the requirement of ANSI, NEMA and Underwriters Laboratories standards.

2. Field Tests

a. Field testing shall be done in accordance with the requirements specified in the General Conditions, Division 1, and NETA Acceptance Testing Specifications, latest edition.

- END OF SECTION -

SECTION 16670

LIGHTNING PROTECTION SYSTEMS

PART 1 – GENERAL

1.01 THE REQUIREMENT

A. The Contractor shall furnish, install, test, and place in satisfactory operation a complete lightning protection system as specified herein. This is a performance specification. The Drawings do not show a complete lightning protection system design. The Contractor shall retain the services of a firm specializing in the design, installation, and testing of lightning protection systems.

1.02 CODES AND STANDARDS

A. The system shall comply with the following codes and standards:

1. Underwriters Laboratories, Inc. (U.L.):

   a. U.L. 96 - Lightning System Components

   b. U.L. 96A - Installation Requirements for Lightning Protection Systems

   c. U.L. 467 – Grounding and Bonding Equipment

2. National Fire Protection Association (NFPA):

   a. ANSI/NFPA 780 - Lightning Protection Code

3. Lightning Protection Institute (LPI):

   a. LPI-175 - Standard of Practice

1.03 SUBMITTALS

A. In accordance with the procedures and requirements set forth in the General Conditions and Section 01300, Submittals, the Contractor shall obtain from the equipment manufacturer and submit the following:

1. Shop Drawings

2. Operation and Maintenance Manuals

3. Spare Parts List

4. Test Reports

5. UL Master Label Certification

1.04 SHOP DRAWINGS

A. Each submittal shall be complete in all respects, incorporating all information and data listed herein and all additional information required for evaluation of the proposed equipment's compliance with the Contract Documents.

B. Partial, incomplete or illegible submittals will be returned to the Contractor without review for resubmittal.

C. Shop drawings for each lightning protection system shall include, but not be limited to:

1. Product data sheets.

2. Complete U.L. approved, full size layout and installation drawings/details with clearly marked dimensions. Drawings shall indicate the exact location of all system components. Drawings shall be signed by a full-time employee of the lightning protection system manufacturer who is in responsible charge of this project and has been engaged in the business for at least ten (10) years.

3. Weights of major all components.

4. Bill of material list for each lightning protection system.

5. Manufacturer's installation instructions.

6. Manufacturer's and installer's standard warranty.

7. Evidence of the designer/installers UL listing.

D. The shop drawing information shall be complete and organized in such a way that the Engineer can determine if the requirements of these specifications are being met. Copies of technical bulletins, technical data sheets from "soft-cover" catalogs, and similar information which is "highlighted" or somehow identifies the specific equipment items the Contractor intends to provide are acceptable and shall be submitted.

1.05 OPERATIONS AND MAINTENANCE MANUALS

A. The Contractor shall submit operation and maintenance manuals in accordance with the procedures and requirements set forth in the General Conditions and Division 1. The manuals shall include:

1. Instruction books and/or leaflets.

2. Recommended spare parts list.

3. Final as-built construction drawings included in the shop drawings incorporating all changes made during the installation.

4. All other information that was included in the shop drawing submittal.

1.06 SPARE PARTS

A. The lightning protection system shall be furnished with all spare parts as recommended by the equipment manufacturer.

In addition to the manufacturer recommended spare parts, the Contractor shall furnish the following minimum spare parts for each structure provided with a lightning protection system under this Contract:

No. Required	Descriptions
2	Air Terminals
2	Point Tip Protectors

B. The spare parts shall be packed in containers suitable for long term storage, bearing labels clearly designating the contents and the pieces of equipment for which they are intended.

C. Spare parts shall be delivered at the same time as the equipment to which they pertain. The Contractor shall properly store and safeguard such spare parts until completion of the Work, at which time they shall be delivered to the Owner.

D. Spare parts lists, included with the shop drawing submittal shall indicate specific sizes, quantities, and part numbers of the items to be furnished. Terms such as "1 lot of packing material" are not acceptable.

E. Parts shall be completely identified with a numerical system to facilitate parts inventory control and stocking. Each part shall be properly identified by a separate number. Those parts which are identical for more than one size, shall have the same part number.

PART 2 -- PRODUCTS

2.01 MANUFACTURERS

A. The lightning protection systems covered by this Specification shall be furnished using standard components of proven performance as manufactured by reputable concerns. The systems shall be designed, constructed and installed in accordance with the best practices of the trade, and shall operate satisfactorily when installed.

B. The lightning protection systems shall be furnished and installed by Bonded Lightning Protection, Thompson Lightning Protection, Inc, Lightning Elimination and Consultants, Modern Lightning Protection Company, Inc. or approved equal.

C. System designer/supplier qualifications shall be as follows:

1. System components shall be manufactured by a company specializing in lightning protection equipment with a minimum of 5 years documented experience. Company shall be listed in the Section entitled "Lightning Conductor, Air Terminals and Fittings" of the U.L. "Electrical Construction

Materials Directory" for at least 5 years previous to this Contract's bid opening date.

2. The system designer/installer shall be an authorized installer of manufacturer with a minimum of 5 years of documented experience. Designer/Installer shall be listed in the section entitled "Lightning Protection Installation" of the U.L. "Electrical Construction Materials Directory" for at least 5 years previous to this Contract's bid opening date.

2.02 LIGHTNING PROTECTION SYSTEMS

A. General

1. All components and parts of the lightning protection system shall be as specified herein. The materials used shall meet or exceed the material specification requirements of the Underwriters Laboratories, Inc. All materials shall be marked with a UL label or stamp.

2. The complete lightning protection system for existing structures modified under this Contract shall be inspected and included in the Master Label certification.

B. Conductors

1. Conductors shall be aluminum cable, consisting of a minimum of 24 strands of No. 14 AWG aluminum wire. Copper conductors shall be furnished and installed only where required and when in contact with the earth. Where termination of copper conductors is required to aluminum parts, suitable bi-metallic connectors approved for the purpose shall be furnished and installed.

C. Fittings

1. Fittings shall be the bolted type with stainless steel bolts, nuts, and washers. Fittings shall be of cast metal construction specifically designed for the application. Crimp-type fittings are not acceptable. Bi-metallic type fittings shall be furnished where required.

D. Fasteners

1. Fasteners shall be manufactured from non-corrosive material of ample strength and rigidity for the application.

E. Bases

1. Bases shall be bolted style provided with the model to suit the application (i.e. parapet, standing seam, etc.). Bolts, nuts, and washers shall be made of stainless steel. Bases shall be of aluminum or bronze construction, compatible with the material of the surface to which it is attached. Crimp-type bases are not acceptable.

F. Ground Rods

1. Ground rods shall be 3/4-inch by 10-foot 0-inch sectional type copper-clad steel rods; as specified in Section 16170, Grounding and Bonding; quantity as required. Ground rods and all associated hardware shall be UL 467 listed.

G. Air Terminals

1. Air terminals shall be solid aluminum. Air terminals shall be tapered or blunt tip type to suit the application and furnished with air terminal bases and safety tips (ball or bullet type) for impalement protection.

H. Thru-Roof Hardware

1. Thru-roof penetrations shall have stainless steel nuts, bolts, and washers. Sealing washers and sealing boots shall be provided as required and shall be compatible with the roofing material. Conductor connections to this roof hardware shall be by bolted connection. Crimp type connections are not acceptable.

PART 3 -- EXECUTION

3.01 INSTALLATION

A. The lightning protection system shall be furnished and installed in accordance with the manufacturer's installation instructions. One (1) copy of these instructions shall be included with the system components at time of shipment. The system components shall be suitably protected until accepted by the Owner.

B. The equipment shall be installed in accordance with the manufacturer's recommendations. This shall include, but not be limited to the following:

1. Course all main down conductors to maintain a downward or horizontal run free of pockets or sags. Maintain an eight-inch (8") minimum radius and make no bend greater than 90 degrees. Follow the most direct route with inductance bonding conductors maintaining the horizontal or downward course of the main conductor. Interconnect roof conductors to provide at least two paths to ground from each terminal and to form closed loops. Follow the most direct path possible with down conductors between roof conductors and ground terminals. All down conductors for new occupiable buildings shall be placed in a concealed manner. Down conductors for existing occupiable structures, tanks, basins, and other non-occupiable structures may be installed exposed.

2. Install ground connections at no less than 60-foot intervals and at each down conductor on perimeter. If the structure has a ground grid, the ground rods from that grid may be used for connection to the down conductors. At each ground connection, determine the extent of the grounding arrangement according to the volume and type of soil encountered and the lowest expected moisture content. Have the Owner's representative observe each ground connection. Bond together all electrical service, telephone service, and lightning protection grounds to all underground metallic piping systems as required by Article 250 of the NEC.

3. The structural steel frame (where provided) may substitute for main down conductors provided the frame is electrically continuous and of adequate cross-section. Where the steel frame is utilized, connect the roof conductor to steel at least as often and at the same column as the ground connections. Make

connections to steel with exothermic welds wherever possible. Provide bonding as required to make the entire metal frame continuous.

4. Bond all sizable metal objects within 6-feet of down, roof, or grounding conductors to the system. Use only approved fittings and conductors.

5. Wherever possible problems with corrosion are encountered, use substitute approved materials and/or provide corrosion protection. Use bimetallic or other specially designed and approved connectors where dissimilar metals are to be joined.

6. Install air terminals within 2-feet of the edge of structure and at intervals not greater than 20-feet along perimeter and peak. Provide additional terminals to limit spacing across roof to 50-feet maximum. Bond any exposed metallic object or surface to the roof conductor. Flash all terminal or conductor penetrations in the roof to conform to the roofer's requirements.

7. Record each ground connection location and mark up a reproducible copy of the approved shop drawings with their location. Also, indicate any substantial field modifications on these drawings. These drawings shall be included in the O&M manual.

8. Log all continuity tests of metal framing, ground grid connections, bonding, and similar connections. Indicate the location of tests or plans. Include test results in the O&M manual.

9. Retain U.L. to make an inspection of the completed installation and issue a Master Label Certification. Furnish a copy of the Certification to the Owner upon receipt.

3.02 TESTING

A. All tests shall be performed in accordance with the requirements of the General Conditions and Division 1. The following tests are required:

1. Certified Shop Tests and Reports

   a. None Required.

2. Field Tests

   a. After installation, the lightning protection system shall be tested for continuity to the ground grid. The tests shall be made by the lightning protection system installer. Test shall be as follows:

      i. Record the resistance between each down conductor and the ground grid to ensure a suitable low-resistance connection. All resistance values shall be 1 ohm or less. Test shall be made after the ground grid has been installed and tested per the requirements of Section 16170, Grounding and Bonding.

-END OF SECTION-

SECTION 16902 - ELECTRIC CONTROLS AND RELAYS

PART 1 -- GENERAL

1.01 THE REQUIREMENT

A. The Contractor shall furnish, install, test, and place in satisfactory operation all electric controls and relays as specified herein and indicated on the Drawings.

B. Electrical control and relay systems shall be assembled using NEMA rated components. Components designed and built to International Electrotechnical Commission (IEC) standards are not recognized. Equipment designed, manufactured and labeled in compliance with IEC standards is not acceptable.

C. Reference Section 16000, Basic Electrical Requirements and Section 16195, Electrical Identification.

1.02 CODES AND STANDARDS

A. Products specified herein shall be in conformance with or listed to the following standards as applicable:

1. NEMA 250 – Enclosures for Electrical Equipment

2. UL 508A – Standard for Industrial Control Panels

3. UL-1203 – Standard for Explosion-proof and Dust-ignition-proof Electrical Equipment for use in Hazardous (Classified) Locations.

4. ANSI/ISA 12.12.01-2013 – Nonincendive Electrical Equipment for use in Class I and II, Division II Hazardous (Classified) locations.

1.03 SUBMITTALS

A. In accordance with the procedures and requirements set forth in the General Conditions and Section 01300, Submittals, the Contractor shall obtain from the equipment manufacturer and submit the following:

1. Shop Drawings

2. Spare Parts List

B. Each submittal shall be identified by the applicable specification section.

1.04 SHOP DRAWINGS

A. Each submittal shall be complete in all respects, incorporating all information and data listed herein and all additional information required for evaluation of the proposed equipment's compliance with the Contract Documents.

B. Partial, incomplete or illegible submittals will be returned to the Contractor without review for resubmittal.

C. Shop drawings shall include but not be limited to:

1. Product data sheets.

D. The shop drawing information shall be complete and organized in such a way that the Engineer can determine if the requirements of these Specifications are being met. Copies of technical bulletins, technical data sheets from "soft-cover" catalogs, and similar information which is "highlighted" or somehow identifies the specific equipment items the Contractor intends to provide are acceptable and shall be submitted.

1.05 SPARE PARTS

A. All spare parts as recommended by the equipment manufacturer shall be furnished to the Owner by the Contractor. In addition to the manufacturer recommended spare parts, the following spare parts shall be provided for the local control stations:

1. One (1) contact block of each type furnished on the project

2. One (1) indicating light lens of each color furnished on the project

3. One (1) LED lamp of each color furnished on the project

B. The spare parts shall be packed in containers suitable for long term storage, bearing labels clearly designating the contents and the pieces of equipment for which they are intended.

C. Spare parts shall be delivered at the same time as the equipment to which they pertain. The Contractor shall properly store and safeguard such spare parts until completion of the work, at which time they shall be delivered to the Owner.

D. Spare parts lists, included with the shop drawing submittal, shall indicate specific sizes, quantities, and part numbers of the items to be furnished. Terms such as "1 lot of packing material" are not acceptable.

E. Parts shall be completely identified with a numerical system to facilitate parts control and stocking. Each part shall be properly identified by a separate number. Those parts which are identical for more than one size, shall have the same part number.

PART 2 -- PRODUCTS

2.01 CONTROL COMPONENTS

A. Manufacturers

1. Control components shall be manufactured by Eaton, The Square D Company, General Electric, Allen-Bradley, Siemens Energy and Automation, or Engineer approved equal.

B. Pilot Devices

1. General

   a. All pilot devices shall be provided with a legend plate. Legend plates shall have a white background and black lettering and indicate the function of the respective pilot device. The text shown on the Drawings or indicated in the specifications shall be used as the basis for legend plate engraving (i.e. HAND-OFF-AUTO, RUN, EMERGENCY STOP, etc).

   b. All pilot devices shall be selected and properly installed to maintain the NEMA 250 rating of the enclosure in which they are installed. All pilot devices shall be UL 508 Listed.

   c. All pilot devices shall be 30.5mm in diameter, unless otherwise indicated. 22mm devices are not acceptable.

   d. Pilot devices for all electrical equipment under this Contract shall be of the same type and manufacturer unless otherwise specified herein or indicated on the Drawings.

   e. In Class 1 Division 2 hazardous locations, pilot devices shall be the hermetically-sealed type, constructed in accordance with ANSI/ISA 12.12.01.

2. Pushbuttons

   a. Pushbuttons shall be non-illuminated, black in color, and have momentary style operation unless otherwise indicated on the Drawings.

   b. Pushbuttons shall have the quantity of normally closed and/or normally open contacts as indicated on the Drawings and as required. In addition to the required contacts, one (1) spare normally open and one (1) spare normally closed contact shall be installed at each pushbutton. Contacts shall be rated for 5A at 250VAC/DC (minimum), but no less than required for the application.

   c. Pushbuttons shall be provided with a full guard around the perimeter of the button. Where a lockout style pushbutton is specified or indicated on the Drawings, provide a padlockable guard.

3. Selector Switches

   a. Selector switches shall be non-illuminated, black in color, and have the number of maintained positions as indicated on the Drawings and as required. Handles shall be the extended type that provide a greater surface area for operation.

   b. Selector switches shall have the quantity of normally closed and/or normally open contacts as indicated on the Drawings and as required. In addition to the required contacts, one (1) spare normally open and one (1) spare normally closed contact shall be installed at each selector switch.

Contacts shall be rated for 5A at 250VAC/DC (minimum), but no less than required for the application.

c. Where indicated in the Drawings or Specifications, provide spring return positions.

d. Selector switches shall be provided with an indexing component that fits into the keyed portion of the cutout for the device and prevents the switch from spinning when operated.

4. Indicating Lights

a. Indicating lights shall LED type, with the proper voltage rating to suit the application, and push-to-test feature.

b. Indicating light lens colors shall be as required in equipment specifications and/or as indicated on the Drawings. If lens colors are not indicated, the following colors shall be used:

i. Red - "Run", "On", “Open”

ii. Green - "Off", “Closed”

iii. Amber - "Alarm", "Fail"

iv. White - “Control Power On”

5. Emergency Stop and Tagline Switches

a. Emergency stop switches shall be non-illuminated, red in color, with a minimum 35mm diameter mushroom head. Once activated, switch shall maintain its position and require a manual pull to release/reset.

b. Tagline switches shall have a plunger that activates upon tension from the associated safety cable. Once activated, switch shall maintain its position and require a manual release/reset.

c. Emergency stop and tagline switches shall have the quantity of normally closed and/or normally open contacts as indicated on the Drawings and as required. In addition to the required contacts, one (1) spare normally open and one (1) spare normally closed contact shall be installed at each switch. Contacts shall be rated for 5A at 250VAC/DC (minimum), but no less than required for the application.

C. Relays and Timers

1. General

a. Relays and timers shall be furnished with an integral pilot light for positive indication of coil energization.

b. Relays and timers shall have tubular pin style terminals with matching 11-pin DIN rail mount socket. Spade or blade style terminals are not acceptable.

c. Relays and timers for all electrical equipment under this Contract shall be of the same type and manufacturer unless otherwise specified herein or indicated on the Drawings.

2. Control and Pilot Relays

a. Miniature or “ice-cube” type relays are not acceptable.

b. Relays shall have coil voltage as required to suit the application and/or as indicated on the Drawings.

c. Relays shall be provided with contacts rated for 10A (resistive), minimum, at 120/240 VAC and 28 VDC. Relays shall have 3-pole, double-throw (3PDT) contact arrangement.

3. Time Delay Relays

a. Timers delay relays shall utilize electronic timing technology. Mechanical timing devices are not acceptable.

b. Relays shall have coil voltage as required to suit the application and/or as indicated on the Drawings.

c. Relays shall be provided with contacts rated for 10A (resistive), minimum, at 120/240 VAC and 28 VDC. Relays shall have double-pole double-throw (DPDT) contact arrangement.

d. Time delay ranges shall be as indicated on the Drawings and/or as required to suit the application. Timing range shall be adjustable from the front of the relay. On delay and off delay timer configurations shall be provided as indicated on the Drawings and/or as required to suit the application.

4. Elapsed Time Meters

a. Elapsed time meters shall be non-resettable type with no less than a 4 digit display. Coil voltage shall be as required to suit the application and/or as indicated on the Drawings.

D. Control Terminal Blocks

1. Control terminal blocks shall be assembled on non-current carrying galvanized steel DIN mounting rails securely bolted to the enclosure or subpanel. Terminals shall be tubular screw type with pressure plate that will accommodate wire size range of #22 - #8 AWG.

2. Control terminal blocks shall be single tier with a minimum rating of 600 volts and 20A. Separate terminal strips shall be provided for each type of control used (i.e.

120VAC vs. 24VDC). Quantity of terminals shall be provided as required to suit the application. In addition, there shall be a sufficient quantity of terminals for the termination of all spare conductors.

3. Terminals shall be marked with a permanent, continuous marking strip, with each terminal numbered. One side of each terminal shall be reserved exclusively for incoming field conductors. Common connections and jumpers required for internal wiring shall not be made on the field side of the terminal.

2.02 LOCAL CONTROL STATIONS

A. Local control stations shall be furnished and installed complete with pushbuttons, selector switches, indicating lights, and other devices as indicated on the Drawings.

B. Specific devices installed in local control stations shall be provided in accordance with the requirements specified elsewhere in this Section.

C. In non-hazardous locations, local control stations shall be furnished with the following enclosure type and material of construction, dependent upon the designation of the area in which they are to be installed. Area designations are indicated on the Drawings.

AREA DESIGNATION	**ENCLOSURE TYPE AND MATERIAL**
Indoor Wet Process Area	NEMA 4X, Type 304 Stainless Steel
Indoor Dry Process Area	NEMA 12, Die Cast Zinc
Indoor Dry Non-process Area	NEMA 12, Die Cast Zinc
Indoor Type 1 Chemical Storage/Transfer Area	NEMA 4X, Fiberglass or Thermoplastic Polyester
Indoor Type 2 Chemical Storage/Transfer Area	NEMA 4X, Type 304 Stainless Steel
All Outdoor Areas	NEMA 4X, Type 304 Stainless Steel

D. Provide a nameplate on each local control station in accordance with Section 16195, Electrical Identification. The name and/or number of the equipment associated with each control station shall be engraved on the nameplate, followed by the words “LOCAL CONTROL STATION”.

PART 3 -- EXECUTION

3.01 INSTALLATION

A. Local control stations shall be provided in the enclosure type and material of construction required for the area in which it is installed. Reference the requirements in Part 2 herein, and the area designations indicated on the Drawings.

B. All control components shall be mounted in a manner that will permit servicing, adjustment, testing, and removal without disconnecting, moving, or removing any other component. Components mounted on the inside of panels shall be mounted on removable plates and not directly to the enclosure. Mounting shall be rigid and stable unless shock mounting is required otherwise by the manufacturer to protect equipment from vibration.

Component's mounting shall be oriented in accordance with the component manufacturer's and industries' standard practices.

C. Pilot devices shall be properly bonded to the equipment enclosure door where they are installed. If proper bonding cannot be achieved through the locknuts that affix the device in place, a green colored bonding screw shall be provided on the pilot device. The bonding screw shall be bonded to the equipment enclosure through the use of an insulated green bonding conductor.

D. Local control station covers shall be bonded to the local control station enclosure through the use of an insulated green bonding conductor.

E. Wiring to devices at each local control station shall be provided with enough slack to permit the local control station cover to be removed and pulled at least 6 inches away from the enclosure.

F. Terminal strips, relays, timers, and similar devices shall not be installed on the rear of the panel/cabinet doors. Terminal strips, relays, timers, and similar devices shall not be installed on the side walls of panel/cabinet interiors without written permission from the Engineer.

- END OF SECTION -

SECTION 17000 - CONTROL AND INFORMATION SYSTEM SCOPE AND GENERAL REQUIREMENTS

PART 1 -- GENERAL

1.01 SCOPE

A. The Contractor shall provide, through the services of an instrumentation and control system subcontractor, all components, system installation services, as well as all required and specified ancillary services in connection with the Instrumentation, Control and Information System. The System includes all materials, labor, tools, fees, charges and documentation required to furnish, install, test and place in operation a complete and operable instrumentation, control and information system as shown and/or specified. The system shall include all measuring elements, signal converters, transmitters, local control panels, digital hardware and software, signal and data transmission systems, interconnecting wiring and such accessories as shown, specified, and/or required to provide the functions indicated.

B. The scope of the work to be performed under this Division includes but is not limited to the following:

1. The Contractor shall retain overall responsibility for the instrumentation and control system as specified herein.

2. Furnish and install process instrumentation and associated taps and supports as scheduled or shown on the Drawings, unless otherwise noted or supplied by equipment vendors.

3. Furnish and install the following equipment, as shown on the Drawings and as specified in Division 17:

   a. High Service Pump Station Master Control Panel MCP-HS (PLC-10);

4. Modify existing SCADA HMI screens for the WTP's existing SCADA system, as shown on the Drawings and as specified in Division 17. Refer to Section 17300 for a detailed description of the requirements.

5. Final termination and testing of all instrumentation and control system signal wiring and power supply wiring at equipment furnished under Division 17.

6. Furnish, install and terminate all special cables (instrument cables, etc.).

7. Furnish and terminate control system communication network cables.

8. Furnish and install surge protection devices for all digital equipment, local control panels, and instrumentation provided under this Division, including connections to grounding system(s) provided under Division 16.

051215BR

9. Coordinate grounding requirements with the electrical subcontractor for all digital equipment, local control panels, and instrumentation provided under this Division. Terminate grounding system cables at all equipment provided under this Division.

10. Provide system testing, calibration, training and startup services as specified herein and as required to make all systems fully operational.

C. It is the intent of the Contract Documents to construct a complete and working installation. Items of equipment or materials that may reasonably be assumed as necessary to accomplish this end shall be supplied whether or not they are specifically stated herein.

1.02 RELATED ITEMS

A. Field mounted switches, torque switches, limit switches, gauges, valve and gate operator position transmitters, sump pump controls and other instrumentation and controls furnished with mechanical or electrical equipment not listed in the instrument schedule shall be furnished, installed, tested and calibrated as specified under other Divisions.

B. Additional and related work performed under Division 16 includes the following:

1. Instrument A.C. power source and disconnect switch for process instrumentation, A.C. grounding systems, and A.C. power supplies for all equipment, control panels and accessories furnished under Division 17.

2. Conduit and raceways for all instrumentation and control system signal wiring, grounding systems, special cables and communication network cables.

3. Instrumentation and control system signal wiring.

4. Install control system communication network cables.

5. Furnish and install grounding systems for all digital equipment, local control panels and instrumentation provided under Division 17. Grounding systems shall be complete to the equipment provided under Division 17, ready for termination by the instrumentation subcontractor.

6. Termination of all instrumentation and control system signal wiring at all equipment furnished under other divisions of the Specifications.

7. Final wiring and termination to A.C. grounding systems and to A.C. power sources (e.g. panelboards, motor control centers, and other sources of electrical power).

1.03 GENERAL INFORMATION AND DESCRIPTION

A. Where manufacturers are named for a particular item of equipment, it is intended as a guide to acceptable quality and performance and does not exempt such equipment from the requirements of these Specifications or Drawings.

B. In order to centralize responsibility, it is required that all equipment (including field instrumentation and control system hardware and software) offered under this Division shall be furnished and installed by the instrumentation subcontractor, or under the supervision of the instrumentation subcontractor, who shall assume complete responsibility for proper operation of the instrumentation and control system equipment, including that of coordinating all signals, and furnishing all appurtenant equipment.

C. The Contractor shall retain total responsibility for the proper detailed design, fabrication, inspection, test, delivery, assembly, installation, activation, checkout, adjustment and operation of the entire instrumentation and control system as well as equipment and controls furnished under other Divisions of the Specifications. The Contractor shall be responsible for the delivery of all detailed drawings, manuals and other documentation required for the complete coordination, installation, activation and operation of mechanical equipment, equipment control panels, local control panels, field instrumentation, control systems and related equipment and/or systems and shall provide for the services of a qualified installation engineer to supervise all activities required to place the completed facility in stable operation under full digital control.

D. The instrumentation and control system shall be capable of simultaneously implementing all real-time control and information system functions, and servicing all operator service requests as specified, without degrading the data handling and processing capability of any system component.

E. Control system inputs and outputs are listed in the Input/Output Schedule. This information, together with the functional control descriptions, process and instrumentation diagrams, and electrical control schematics, describes the real-time monitoring and control functions to be performed. In addition, the system shall provide various man/machine interface and data reporting functions as specified in the software sections of this Specification.

F. The mechanical, process, and electrical drawings indicate the approximate locations of field instruments, control panels, systems and equipment as well as field-mounted equipment provided by others. The instrumentation subcontractor shall examine the mechanical, process and electrical drawings to determine actual size and locations of process connections and wiring requirements for instrumentation and controls furnished under this Contract. The instrumentation subcontractor shall inspect all equipment, panels, instrumentation, controls and appurtenances either existing or furnished under other Divisions of the Specifications to determine all requirements to interface same with the control and information system. The Contractor shall coordinate the completion of any required modifications with the associated supplier of the item furnished.

G. The instrumentation subcontractor shall review and approve the size and routing of all instrumentation and control cable and conduit systems furnished by the electrical subcontractor for suitability for use with the associated cable system.

H. The Contractor shall coordinate the efforts of each supplier to aid in interfacing all systems. This effort shall include, but shall not be limited to, the distribution of approved shop drawings to the electrical subcontractor and to the instrumentation subcontractor furnishing the equipment under this Division.

I. The Contractor shall be responsible for providing a signal transmission system free from electrical interference that would be detrimental to the proper functioning of the instrumentation and control system equipment.

J. The Owner shall have the right of access to the subcontractor's facility and the facilities of his equipment suppliers to inspect materials and parts; witness inspections, tests and work in progress; and examine applicable design documents, records and certifications during any stage of design, fabrication and tests. The instrumentation subcontractor and his equipment suppliers shall furnish office space, supplies and services required for these surveillance activities.

K. The terms "Instrumentation", "Instrumentation and Control System", and "Instrumentation, Control and Information System" shall hereinafter be defined as all equipment, labor, services and documents necessary to meet the intent of the Specifications.

1.04 INSTRUMENTATION AND CONTROL SYSTEM SUBCONTRACTORS

A. Instrumentation and control system subcontractors shall be regularly engaged in the detailed design, fabrication, installation, and startup of instrumentation and control systems for water treatment facilities. Instrumentation and control system subcontractors shall have a minimum of 7 years of such experience, and shall have completed a minimum of three high service pump station projects, similar in size and complexity as that specified herein. Where specific manufacturers and/or models of major hardware or software products (PLC, HMI software, LAN, etc.) are specified to be used on this project, the instrumentation and control system subcontractor shall have completed at least 5 projects using that specified hardware or software. As used herein, the term “completed” shall mean that a project has been brought to final completion and final payment has been made. Instrumentation and control system subcontractors shall be prepared to submit written proof of the prerequisites defined in this section at the request of the Engineer. Instrumentation and control system subcontractors unable or unwilling to submit written proof of the prerequisites defined in this section shall not be acceptable.

B. Any instrumentation and control system subcontractor that has been subject to litigation or the assessment of liquidated damages for nonperformance on any project within the last five calendar years shall not be acceptable.

1.05 DEFINITIONS

A. Solid State: Wherever the term solid state is used to describe circuitry or components in the Specifications, it is intended that the circuitry or components shall be of the type that convey electrons by means of solid materials such as crystals or that work on magnetic principles such as ferrite cores. Vacuum tubes, gas tubes, slide wires, mechanical relays, stepping motors or other devices will not be considered as satisfying the requirements for solid state components of circuitry.

B. Bit or Data Bit: Whenever the terms bit or data bit are used in the Specification, it is intended that one bit shall be equivalent to one binary digit of information. In specifying data transmission rate, the bit rate or data bit rate shall be the number of binary digits

transmitted per second and shall not necessarily be equal to either the maximum pulse rate or average pulse rate.

C. Integrated Circuit: Integrated circuit shall mean the physical realization of a number of circuit elements inseparably associated on or within a continuous body to perform the function of a circuit.

D. Mean Time Between Failures (MTBF): The MTBF shall be calculated by taking the number of system operating hours logged during an arbitrary period of not less than six months and dividing by the number of failures experienced during this period plus one.

E. Mean Time to Repair (MTTR): The MTTR shall be calculated by taking the total system down time for repair over an arbitrary period of not less than six months coinciding with that used for calculation of MTBF and dividing by the number of failures causing down time during the period.

F. Availability: The availability of a non-redundant device or system shall be related to its MTBF and MTTR by the following formula:

A = 100 x (MTBF/(MTBF + MTTR)) Percent

The availability of a device or system provided with an automatically switched backup device or system shall be determined by the following formula:

A = A2 + 1 - ((1-A1) x (1-A1))

where:

A1 = availability of non-redundant device or system
A2 = availability of device or system provided with an automatically switched backup device or system

G. Abbreviations: Specification abbreviations include the following:

A	-	Availability
ADC	-	Analog to Digital Converter
AI	-	Analog Input
AO	-	Analog Output
AVAIL	-	Available
BCD	-	Binary Coded Decimal
CSMA/CD	-	Carrier Sense Multiple Access/Collision Detect
CPU	-	Central Processing Unit
CRC	-	Cyclic Redundancy Check
CRT	-	Cathode Ray Tube
CS	-	Control Strategy

DAC	-	Digital to Analog Converter
DBMS	-	Data Base Management System
DI	-	Discrete Input
DMA	-	Direct Memory Access
DO	-	Discrete Output
DPDT	-	Double Pole, Double Throw
DVE	-	Digital to Video Electronics
EPROM	-	Erasable, Programmable Read Only Memory
FDM	-	Frequency Division Multiplexing
FSK	-	Frequency Shift Keyed
HMI	-	Human Machine Interface (Software)
I/O	-	Input/Output
LAN	-	Local Area Network
LDFW	-	Lead-Follow
MCC	-	Motor Control Center
MTBF	-	Mean Time Between Failures
MTTR	-	Mean Time To Repair
OS	-	Operating System
PAC	-	Programmable Automation Controller
PCB	-	Printed Circuit Board
PID	-	Proportional Integral and Derivative Control
PLC	-	Programmable Logic Controller
PROM	-	Programmable Read Only Memory
RAM	-	Random Access Memory
RDY	-	Ready
RMSS	-	Root Mean Square Summation
RNG	-	Running
ROM	-	Read Only Memory
RTU	-	Remote Telemetry Unit
SPDT	-	Single Pole, Double Throw
ST/SP	-	Start/Stop
TDM	-	Time Division Multiplexing
UPS	-	Uninterruptible Power Supply

H. To minimize the number of characters in words used in textual descriptions on CRT displays, printouts and nameplates, abbreviations may be used subject to the Engineer's approval. If a specified abbreviation does not exist for a particular word, an abbreviation may be generated using the principles of masking and or vowel deletion. Masking involves retaining the first and last letters in a word and deleting one or more characters (usually vowels) from the interior of the word.

1.06 ENVIRONMENTAL CONDITIONS

A. Instrumentation equipment and enclosures shall be suitable for ambient conditions specified. All system elements shall operate properly in the presence of telephone lines, power lines, and electrical equipment.

B. Inside control rooms and climate-controlled electrical rooms, the temperature will normally be 20 to 25 degrees C; relative humidity 40 to 80 percent without condensation and the air will be essentially free of corrosive contaminants and moisture. Appropriate air filtering shall be provided to meet environmental conditions (i.e., for dust).

C. Other indoor areas may not be air conditioned/heated; temperatures may range between 0 and 40 degrees C with relative humidity between 40 and 95 percent.

D. Field equipment including instrumentation and panels may be subjected to wind, rain, lightning, and corrosives in the environment, with ambient temperatures from -20 to 40 degrees C and relative humidity from 10 to 100 percent. All supports, brackets, interconnecting hardware, and fasteners shall be aluminum, type 316 stainless steel, or metal alloy as otherwise suitable for chemical resistance within chemical feed/storage areas shown on the installation detail drawings.

PART 2 -- PRODUCTS

2.01 NAMEPLATES

A. All items of equipment listed in the instrument schedule, control panels, and all items of digital hardware shall be identified with nameplates. Each nameplate shall be located so that it is readable from the normal observation position and is clearly associated with the device or devices it identifies. Nameplates shall be positioned so that removal of the device for maintenance and repair shall not disturb the nameplate. Nameplates shall include the equipment identification number and description. Abbreviations of the description shall be subject to the Engineer's approval.

B. Nameplates shall be made of 1/16-inch thick machine engraved laminated phenolic plastic having white numbers and letters not less than 3/16-inch high on a black background.

C. Nameplates shall be attached to metal equipment by stainless steel screws and to other surfaces by an epoxy-based adhesive that is resistant to oil and moisture. In cases where the label cannot be attached by the above methods, it shall be drilled and attached to the associated device by means of stainless steel wire.

PART 3 -- EXECUTION

3.01 SCHEDULE OF PAYMENT

A. Payment to the Contractor for Control and Information System materials, equipment, and labor shall be in accordance with the General and Supplementary Conditions. The schedule of values submitted as required by the General and Supplementary Conditions shall reflect a breakdown of the work required for completion of the Control and Information System. The breakdown shall include sufficient detail to permit the Engineer to administer payment for the Control and Information System as outlined below.

B. The following payment schedule defines project milestones that will be used for establishing maximum partial payment amounts for the Control and Information System. Payment for field instruments, field wiring, fiber optic network cable and similar items will be made in addition to the payment for the scopes of services incorporated into the schedule below.

Task Completed	**Maximum Cumulative % Request for Payment**
Mobilization	3%
Approved Submittals	20%
Hardware Purchase (excludes field instruments)	40%
Factory Acceptance Test	60%
Loop Checkout	70%
Control System Start-up and Test	80%
Plant Start-up	90%
Final System Acceptance Test	95%
Final Acceptance	100%

C. Requests for payment for materials and equipment that are not installed on site, but are required for system construction and the factory acceptance test (e.g., digital hardware), or are properly stored as described in the General and Supplementary Conditions and herein, shall be accompanied by invoices from the original supplier to the instrumentation subcontractor substantiating the cost of the materials or equipment.

D. Any balance remaining within the schedule of values for field instruments and other materials installed on the site, or for other materials for which payment is made by invoice, will be considered due upon completion of the Final Acceptance test.

3.02 CLEANING

A. The Contractor shall thoroughly clean all soiled surfaces of installed equipment and materials.

B. Upon completion of the instrumentation and control work, the Contractor shall remove all surplus materials, rubbish, and debris that has accumulated during the construction work. The entire area shall be left neat, clean, and acceptable to the Owner.

3.03 FINAL ACCEPTANCE

A. Final acceptance of the Instrumentation, Control and Information System will be determined complete by the Engineer, and shall be based upon the following:

1. Receipt of acceptable start up completion and availability reports and other documentation as required by the Contract Documents.

2. Completion of the Availability Demonstration.

3. Completion of all specified control system training requirements.

4. Completion of all punch-list items that are significant in the opinion of the Engineer.

B. Final acceptance of the System shall mark the beginning of the extended warranty period.

- END OF SECTION -

SECTION 17030 - CONTROL AND INFORMATION SYSTEM SUBMITTALS

PART 1 -- GENERAL

1.01 THE REQUIREMENT

A. The Contractor shall submit for review complete Shop Drawings for all equipment in accordance with the General Conditions and Division 1 of the Specifications. All submittal material shall be complete, legible, and reproducible, and shall apply specifically to this project.

1.02 RELATED WORK SPECIFIED ELSEWHERE

A. Section 01300 – Submittals

B. Section 17000 – Control and Information System Scope and General Requirements

1.03 DIGITAL HARDWARE SUBMITTALS

A. Submit system block diagram(s) showing:

1. All equipment to be provided.
2. All interconnecting cable.
3. Equipment names, manufacturer, and model numbers.
4. Equipment locations.

B. Submit information for all digital equipment including, but not limited to, the following:

1. Bill of materials with equipment names, manufacturers, complete model numbers and locations.
2. Catalog cuts, including complete part number breakdown information.
3. Complete technical, material and environmental specifications.
4. Assembly drawings.
5. Mounting requirements.
6. Color samples.
7. Nameplates.
8. Environmental requirements during storage and operation.

032013BR

1.04 SOFTWARE SUBMITTALS

A. Software submittals shall include the following as a minimum:

1. Bill of materials with software names, vendors, and complete listings of included software modules.

2. Standard manufacturer's literature describing the products.

3. Description of function of software in Control and Information System.

4. Limitations or constraints of software.

5. Minimum system (processor and memory) requirements.

6. Operation and maintenance requirements.

B. Submit information on the following software:

1. Third-party software, including:

a. Operating system.

b. Operator workstation (SCADA or HMI) software, including all add-in software provided to perform specific functions (alarm dialers, schedulers, backup creation software, etc.).

c. Office-type products, such as spreadsheets, word processors, etc.

d. Database management software.

e. Communications software, including all applicable local and wide area network software.

f. Programmable controller programming software (where applicable).

2. Software configuration, including:

a. Graphic display organization.

b. Database configuration for operator workstations and database management system.

c. Trends.

d. System security.

e. Formats for all reports, including all required calculations.

f. Intercommunications between software products required to implement system functions.

g. Equipment backup configuration and requirements.

C. Control Strategies

1. Provide control strategy documentation that includes control strategy diagrams (block oriented logic and ladder logic diagrams, as appropriate) to describe the control of all processes. The written description shall follow the format of the functional control descriptions contained herein. The control strategy submittals shall contain the following as a minimum:

a. An overall description of the program structure and how it will meet the specified control requirements.

b. A listing of the program.

c. Extensive comments in the listings to describe program steps.

d. Equation and ladder program derivations for all specified control routines.

e. Resource (processor and memory) requirements.

f. A listing of inputs and outputs to the control strategy.

D. Application Software

1. Provide application software documentation that contains program descriptions for the operation, modification, and maintenance of all application programs provided for the digital system.

2. Application software includes all custom routines developed specifically for this project, or pre-written routines used for accomplishing specified functions for this project. This shall include VBASIC and C programs, and any other add-in custom software.

E. Graphic Displays

1. Submit all graphic displays required to perform the control and operator interface functions specified herein.

2. Submit graphic displays in color for review by the Owner and the Engineer at least 60 days prior to commencement of factory testing.

3. The Contractor shall allow for one major cycle of revisions to the displays prior to factory testing and one minor cycle of revisions following factory test. A cycle of

revisions shall be defined as all revisions necessary to complete a single set of changes marked by the Engineer. Additional corrections shall be performed during start-up as required to accommodate changes required by actual field conditions, at no additional cost to the Owner.

4. Displays shall be printouts of actual process graphics implemented in the system.

1.05 CONTROL PANEL SUBMITTALS

A. Submittals shall be provided for all control panels, and shall include:

1. Exterior panel drawings with front and side views, to scale.

2. Interior layout drawings showing the locations and sizes of all equipment and wiring mounted within the cabinet, to scale.

3. Panel area reserved for cable access and conduit entry.

4. Location plans showing each panel in its assigned location.

B. Submit information for all exterior and interior panel mounted equipment including, but not limited to, the following:

1. Bill of materials with equipment names, manufacturers, complete model numbers and locations.

2. Catalog cuts, including complete part number breakdown information.

3. Complete technical, material and environmental specifications.

4. Assembly drawings.

5. Mounting requirements.

6. Color samples.

7. Nameplates.

8. Environmental requirements during storage and operation.

C. Submit panel wiring diagrams showing power, signal, and control wiring, including surge protection, relays, courtesy receptacles, lighting, wire size and color coding, etc.

1.06 INSTRUMENT SUBMITTALS

A. Submit information on all field instruments, including but not limited to the following:

1. Product (item) name and tag number used herein and on the Contract Drawings.

2. Catalog cuts, including complete part number breakdown information.

3. Manufacturer's complete model number.

4. Location of the device.

5. Input - output characteristics.

6. Range, size, and graduations.

7. Physical size with dimensions, NEMA enclosure classification and mounting details.

8. Materials of construction of all enclosures, wetted parts and major components.

9. Instrument or control device sizing calculations where applicable.

10. Certified calibration data on all flow metering devices.

11. Environmental requirements during storage and operation.

12. Associated surge protection devices.

B. Where multiple instruments are included in the same submittal, instrument data sheets shall be included in the same binder section as the backup information (cut sheets, etc.).

1.07 WIRING AND LOOP DIAGRAMS

A. Submit interconnection wiring and loop diagrams for all panels and signals in the Control and Information System.

B. Electrical interconnection diagrams shall show all terminations of equipment, including terminations to equipment and controls furnished under other Divisions, complete with equipment and cable designations. Where applicable, interconnection wiring diagrams shall be organized by input/output card. Interconnecting diagrams shall be prepared in a neat and legible manner on 11 X 17-inch reproducible prints.

C. Loop drawings shall conform to the latest version of ISA Standards and Recommended Practices for Instrumentation and Control. Loop Drawings shall conform to ISA S5.4, Figures 1-3, Minimum Required Items.

D. Loop drawings shall not be required as a separate document provided that the interconnecting wiring diagrams required in Paragraph B., above, contain all information required by ISA 5.4.

1.08 OPERATION AND MAINTENANCE MANUALS

A. The Contractor shall deliver equipment operation and maintenance manuals in compliance with Section 01300 - Submittals. Operation and maintenance (O&M) manuals shall consist of two basic parts:

1. Manufacturer standard O&M manuals for all equipment and software furnished under this Division.

2. Custom O&M information describing the specific configuration of equipment and software, and the operation and maintenance requirements for this particular project.

B. The manuals shall contain all illustrations, detailed drawings, wiring diagrams, and instructions necessary for installing, operating, and maintaining the equipment. The illustrated parts shall be numbered for identification. All modifications to manufacturer standard equipment and/or components shall be clearly identified and shown on the drawings and schematics. All information contained therein shall apply specifically to the equipment furnished and shall only include instructions that are applicable. All such illustrations shall be incorporated within the printing of the page to form a durable and permanent reference book.

C. The manuals shall be prepared specifically for this installation and shall include all required cuts, drawings, equipment lists, descriptions, etc. that are required to instruct operation and maintenance personnel unfamiliar with such equipment. The maintenance instructions shall include troubleshooting data and full preventive maintenance schedules. The instructions shall be bound in locking 3-D-ring binders with bindings no larger than 3.5 inches. The manuals shall include 15% spare space for the addition of future material. The instructions shall include drawings reduced or folded and shall provide the following as a minimum.

1. A comprehensive index.

2. A functional description of the entire system, with references to drawings and instructions.

3. A complete "as-built" set of all approved shop drawings, which shall reflect all work required to achieve final system acceptance.

4. A complete list of the equipment supplied, including serial numbers, ranges, and pertinent data.

5. Full specifications on each item.

6. Detailed service, maintenance, and operation instructions for each item supplied.

7. Special maintenance requirements particular to this system shall be clearly defined, along with special calibration and test procedures.

8. Complete parts lists with stock numbers and name, address, and telephone number of the local supplier.

9. References to manufacturers' standard literature where applicable.

10. Warning notes shall be located throughout the manual where such notes are required to prevent accidents or inadvertent misuse of equipment.

D. The operating instructions shall clearly describe the step-by-step procedures that must be followed to implement all phases of all operating modes. The instructions shall be in terms understandable and usable by operating personnel and maintenance crews and shall be useful in the training of such personnel. As-built color copies of all system graphic displays shall be included with and referenced in the operating instructions.

E. The maintenance instructions shall describe the detailed preventive and corrective procedures required, including environmental requirements during equipment storage and system operation, to keep the System in good operating condition. All hardware maintenance documentation shall make reference to appropriate diagnostics, where applicable, and all necessary wiring diagrams, component drawings and PCB schematic drawings shall be included.

F. The hardware maintenance documentation shall include, as a minimum, the following information:

1. Operation Information - This information shall include a detailed description of how the equipment operates and a block diagram illustrating each major assembly in the equipment.

2. Preventive-Maintenance Instructions - These instructions shall include all applicable visual examinations, hardware testing and diagnostic routines, and the adjustments necessary for periodic preventive maintenance of the System.

3. Corrective-Maintenance Instructions - These instructions shall include guides for locating malfunctions down to the card-replacement level. These guides shall include adequate details for quickly and efficiently locating the cause of an equipment malfunction and shall state the probable source(s) of trouble, the symptoms, probable cause, and instructions for remedying the malfunction.

4. Parts Information - This information shall include the identification of each replaceable or field-repairable component. All parts shall be identified on a list in a drawing; the identification shall be of a level of detail sufficient for procuring any repairable or replaceable part. Cross-references between equipment numbers and manufacturer's part numbers shall be provided.

G. Software documentation shall conform to a standard format and shall include, but not be limited to, the following:

1. A program abstract that includes:

a. Program Name - The symbolic alphanumeric program name.

b. Program Title - English text identification.

c. Program Synopsis - A brief text shall be provided that specifies the need for the program, states when it shall be used and functionally describes all inputs, outputs and functions performed. This descriptive text shall be written in a language that is understandable by nonsoftware oriented readers.

2. A program description that shall include, but not be limited to, the following:

a. Applicable Documents - List all documents (standard manufacturer's literature, other program descriptions, etc.) by section, if practical, that apply to the program. One complete copy of all applicable reference material shall be provided.

b. Input-Output - Identify each input and output parameter, variable, and software element used by the program. State the purpose of all inputs, outputs, and variables.

c. Processing - This section shall contain a description of the overall structure and function of the program. Describe the program run stream and present a detailed description of how the program operates. Describe the timing and sequencing of operations of the program relative to other programs. Describe all interactions with other programs. Processing logic that is not readily described without considerable background information shall be handled as a special topic with references to an appendix or to control strategy document that details the necessary information. Reference shall also be made to an appendix or control strategy document for equation and program algorithm derivations.

d. System Configuration - Describe in detail the system configuration or status required for program implementation, if appropriate.

e. Limitations and Constraints - Summarize all known or anticipated limitations of the program, if appropriate.

f. Storage - Define program storage requirements in terms of disk or RAM memory allocation.

g. Verification - Describe, as a minimum, a test that can be used by the operator to assure proper program operation. Define the required system configuration, input requirements and criteria for successful test completion.

h. Diagnostics - Describe all program diagnostics, where applicable. Descriptions shall list each error statement, indicate clearly what it means, and specify what appropriate actions should be taken.

i. Malfunction Procedures - Specify procedures to follow for recovering from a malfunction due to either operator error or other sources.

1.09 FINAL SYSTEM DOCUMENTATION

A. All documentation shall be delivered to the Owner prior to final system acceptance in accordance with the Contract Documents. As a minimum, final documentation shall contain all information originally part of the control system submittals.

B. If any documentation or other technical information submitted is considered proprietary, such information shall be designated. Documentation or technical information which is designated as being proprietary will be used only for the construction, operation, or maintenance of the System and, to the extent permitted by law, will not be published or otherwise disclosed.

C. Provide a complete set of detailed electrical interconnection diagrams required to define the complete instrumentation and control system. All diagrams shall be 11 X 17-inch original reproducible prints. All diagrams shall be corrected so as to describe final "as-built" hardware configurations and to reflect the system configuration and control methodology adopted to achieve final system acceptance.

D. Provide system software documentation for the operation and maintenance of all system software programs provided as a part of the digital system. All system software documentation shall be amended as required to delineate all modifications and to accurately reflect the final as-built software configurations.

E. Provide application software documentation that contains program descriptions for the operation, modification, and maintenance of all application programs provided for the digital system.

F. Provide control strategy documentation which shall include control strategy (block oriented or ladder logic) diagrams to describe the control of all processes. Control strategy documentation shall reflect the system configuration and control methodology adopted to achieve final system acceptance. Control strategy documentation shall conform to the submittal requirements listed hereinabove.

G. O&M documentation shall be amended with all final, adjusted values for all setpoints and other operating parameters for Owner reference.

H. The Owner recognizes the fact that not all possible problems related to real-time events, software interlocks, and hardware maintenance and utilization can be discovered during the Acceptance Tests. Therefore, the instrumentation subcontractor through the Contractor shall investigate, diagnose, repair, update, and distribute all pertaining documentation of the deficiencies that become evident during the warranty period. All such documentation shall be submitted in writing to the Owner within 30 days of identifying and solving the problem.

1.10 PROGRAMS AND SOURCE LISTINGS

A. Provide one copy of all standard, of-the-shelf system and application software (exclusive of firmware resident software) on original media furnished by the software manufacturer.

B. Provide one copy of source listings on DVD media for all custom software written specifically for this facility, all database files configured for this facility, and all control strategies. All source listings shall include a program abstract, program linkage and input/output data. Comments describing the program flow shall be frequently interspersed throughout each listing.

1.11 SUBMITTAL/DOCUMENTATION FORMAT

A. All drawing-type submittals and documentation shall be rendered and submitted in the latest version of AutoCAD.

B. All textual-type submittals and documentation shall be rendered and submitted in the latest version of Searchable Adobe Portable Document Format (.pdf).

1.12 ELECTRONIC O&M MANUALS

A. Subject to acceptance by the Owner and Engineer, the O&M information may be submitted in part or in whole in an electronic format on optical media.

B. Electronic O&M manuals shall contain information in Searchable Adobe PDF for documents and AutoCAD for drawings and shall be easily accessible through the use of standard, “off-the-shelf” software.

PART 2 -- PRODUCTS

(NOT USED)

PART 3 -- EXECUTION

(NOT USED)

- END OF SECTION -

SECTION 17040 - CONTROL AND INFORMATION SYSTEM TRAINING REQUIREMENTS

PART 1 -- GENERAL

1.01 THE REQUIREMENT

A. To familiarize the Owner's personnel with the process control system and field instrumentation, training shall be provided as detailed hereunder.

1.02 RELATED WORK SPECIFIED ELSEWHERE

A. Section 17000 – Control and Information System Scope and General Requirements

1.03 SUBMITTALS

A. A minimum of 60 days prior to beginning training, submit a detailed training plan describing the following:

1. A listing of all courses to be conducted.

2. Course content.

3. Applicability of each course to management, operations, maintenance, laboratory, etc., personnel.

4. Course schedules.

5. Qualifications and experience of individual(s) providing training.

B. A minimum of 14 days prior to beginning each training course, submit documentation for use by the Owner's personnel during training. The training documentation shall be specific to the particular course, and shall include the following:

1. A listing of all subjects to be covered.

2. Course schedule.

3. Documentation/lesson plans covering all subjects to be covered during the course instruction. Information shall be in a "how to" format, with sufficient background documentation and references to manufacturer literature to provide a thorough and clear understanding of the materials to be covered.

1.04 GENERAL REQUIREMENTS

A. All costs of providing the training courses shall be borne by the Contractor.

B. As used herein, the term "day" shall mean an eight-hour day, and the term "week" shall mean a five-day, 40-hour week.

C. Training courses, especially those for operator training, may be required to be scheduled during non-standard business hours (i.e., not between the hours of 8:00 am and 5:00 pm) to accommodate the working schedule of the Owner's personnel. No additional compensation will be awarded to the Contractor for training at non-standard hours.

D. All training courses shall complement the experience and skill levels of the Owner's personnel.

E. Training courses shall be structured in order of increasing capability or security levels. The purpose of this requirement is to allow personnel with lesser training requirements or security password levels to drop out of the training at certain times while the training continues for personnel with greater requirements or higher security levels.

F. All training courses shall include lecture as well as "hands on" experience for each of the attending personnel. The Contractor shall provide sufficient equipment for this to be accomplished. For example, training in which the instructor uses the computer and the Owner's personnel passively observe as the instructor demonstrates system functions shall not be acceptable.

G. Unless otherwise specified, all training courses shall be conducted in the Owner's facilities.

H. All training shall be completed prior to system acceptance.

I. Standard manufacturer training courses are acceptable pending approval by the Engineer and Owner.

1.05 OPERATOR TRAINING

A. Two 4-hour courses for up to ten persons each shall be conducted to provide instruction in the use of the Control and Information System to monitor and control the High Service Pump Station and associated systems installed under this contract.

B. Operator training shall include familiarization training covering the Control and Information System. Operators shall be instructed in the names, locations, functions, and basic operation of all items of digital equipment and associated software.

C. Operator training shall cover process and equipment operation both individually and collectively as an operating system. Normal as well as abnormal operating conditions shall be covered, including the response to failure occurrences and system alarms. All operator/system interactions shall be described.

D. Operators shall be trained to instruct other operators and shall be provided with all course materials.

1.07 MAINTENANCE TRAINING

A. A 4-hour course shall be conducted for at least six persons prior to the start-up of digital equipment at the Owner's plant. Instruction shall be provided in the following:

1. Operating all digital equipment, including system start-up and shutdown procedures.

2. The use of hardware diagnostic routines, test equipment and test procedures as required to enable the Owner's personnel to detect and isolate system faults to the circuit board or module level and to implement repairs by replacing failed circuit boards or modules.

3. Calibration and routine maintenance procedures for all analog and digital equipment.

B. Step by step written procedures shall be provided for all preventive maintenance tasks and for identifying hardware faults to the circuit board or module level for all items of digital equipment.

C. All digital equipment preventive and corrective maintenance training activities shall be limited to the use of commercially available off-the-shelf test equipment and to the use of diagnostic routines and hardware items which are the same as those to be provided as part of the system.

1.08 INSTRUMENT TRAINING

A. A 2-hour course shall be provided at the Owner's facilities no more than three months prior to system start-up to instruct a minimum of five persons each in the calibration and preventive maintenance of the field instruments provided under this Contract

PART 2 -- PRODUCTS

(NOT USED)

PART 3 -- EXECUTION

(NOT USED)

- END OF SECTION -

SECTION 17060 - SIGNAL COORDINATION REQUIREMENTS

PART 1 -- GENERAL

1.01 THE REQUIREMENT

A. The Contractor shall conform to the signal coordination requirements specified herein.

B. The Contractor shall be responsible for coordinating signal types and transmission requirements between the various parties providing equipment under this Contract. This shall include, but not be limited to, distribution of appropriate shop drawings among the equipment suppliers, the electrical subcontractor, and the instrumentation subcontractor.

C. Analog signals shall be signals for transmitting process variables, etc. from instruments and to and from panels, equipment PLC's and Control System PLC's.

D. Discrete signals shall consist of contact closures or powered signals for transmitting status/alarm information and control commands between starters, panels, equipment PLC's, the Control System, etc.

1.02 ANALOG SIGNAL TRANSMISSION

A. Signal transmission between electric or electronic instruments, controllers, and all equipment and control devices shall be individually isolated, linear 4-20 milliamperes and shall operate at 24 volts D.C.

B. Signal output from all transmitters and controllers shall be current regulated and shall not be affected by changes in load resistance within the unit's rating.

C. All cable shields shall be grounded at one end only, at the control panel, with terminals bonded to the panel ground bus.

D. Analog signal isolation and/or conversion shall be provided where necessary to interface with instrumentation, equipment controls, panels, and appurtenances.

E. Non-standard transmission systems such as pulse duration, pulse rate, and voltage regulated shall not be permitted except where specifically noted in the Contract Documents. Where transmitters with nonstandard outputs do occur, their outputs shall be converted to an isolated, linear, 4-20 milliampere signal.

F. The Contractor shall provide 24 V power supplies for analog signals and instruments where applicable and as required inside panels, controls, etc.

G. Where two-wire instruments transmit directly to the Control and Information System, the instrumentation subcontractor shall provide power supplies at the PLC-equipped control panels for those instruments.

1227711BR

H. Where four-wire instruments with on-board loop power supplies transmit directly to the Control and Information System, the instrumentation subcontractor shall provide necessary signal isolators or shall otherwise isolate the input from the Control and Information System loop power supply. Similar provisions shall be made when a third element such as a recorder, indicator, or single loop controller with integral loop power supply is included in the loop.

1.03 DISCRETE INPUTS

A. All discrete inputs to equipment and Control and Information System PLC's, from field devices, starters, panels, etc., shall be unpowered (dry) contacts in the field device or equipment, powered from the PLC's, unless specified otherwise.

B. Sensing power (wetting voltage) supplied by the PLC shall be 24 VDC.

1.04 DISCRETE OUTPUTS

A. All discrete outputs from local control panels and Control and Information System PLC's to field devices, starters, panels, etc., shall be 24 VDC powered (sourced) from PLC's.

B. PLC powered discrete outputs shall energize 24 VDC pilot relay coils in the field devices, starters, panels, etc. which in turn open or close contacts in the associated control circuit. The 24 VDC relay coil, contacts, and associated control circuitry shall be furnished integral with the field device, starter, panel, etc. by the supplier and contractor furnishing the field device, starter, or panel.

C. Where required or specified herein, discrete outputs from equipment and Control and Information System PLC's to field devices, starters, panels, motor operated valves, etc., shall be dry contact or relay outputs.

D. Outputs to solenoid valves shall be 120 VAC, powered from the PLC or control panel unless specified or shown otherwise.

1.05 OTHER DISCRETE SIGNALS

A. Discrete signals between starters, panels, etc. where no 24 VDC power supply is available may be 120 VAC, as long as such contacts are clearly identified in the starter, panel, etc. as being powered from a different power supply than other starter/panel components.

B. Where applicable, warning signs shall be affixed inside the starter, panel, etc. stating that the panel is energized from multiple sources.

C. Output contacts in the starter, panel, etc., that are powered from other locations shall be provided with special tags and/or color-coding. Disconnecting terminal strips shall be provided for such contacts.

D. The above requirements shall apply to all starters and panels, regardless of supplier.

PART 2 -- PRODUCTS

2.01 PILOT RELAYS

A. Pilot relays shall be supplied with the following:

1. 24 VDC or 120 VAC coils, as required.

2. At a minimum, DPDT contacts rated at 5 A, 120 VAC or 28 VDC.

3. Sockets for 24 VDC and 120 VAC relays shall be of different configurations.

4. Clips for attachment to sockets.

5. Indicator lights that glow when the relay coil is powered.

B. Pilot relays shall be as manufactured by Square D, Allen Bradley, Potter & Brumfield, or equal.

PART 3 -- EXECUTION

(NOT USED)

- END OF SECTION -

SECTION 17070 - CONTROL AND INFORMATION SYSTEM TESTING - GENERAL

PART 1 -- GENERAL

1.01 THE REQUIREMENT

A. The Contractor shall test the Control and Information System as specified herein to demonstrate compliance with the Contract Documents.

1.02 RELATED WORK SPECIFIED ELSEWHERE

A. Section 17000 – Control and Information System Scope and General Requirements

B. Section 17071 – Factory Acceptance Test

C. Section 17072 – Field Testing

D. Section 17073 – Final Acceptance Test

1.03 SUBMITTALS

A. For each of the specified tests, submit a test plan to the Engineer at least one month in advance of commencement of the tests. The test plan shall contain the following at a minimum:

1. A schedule of all testing to be conducted.
2. A brief description of the testing to be performed
3. Test objectives.
4. Testing criteria per the Specifications.
5. Check lists and procedures for performing each of the specified tests.
6. Sample test result documentation.
7. Requirements for other parties.

1.04 GENERAL REQUIREMENTS

A. All system start-up and test activities shall follow detailed test procedures; check lists, etc., previously approved by the Engineer. The Engineer shall be notified at least 30 days in advance of any system tests and reserves the right to have his and/or the Owner's representatives in attendance.

B. The Contractor shall provide the services of experienced factory trained technicians, tools and equipment to field calibrate, test, inspect, and adjust all equipment in accordance with manufacturer's specifications and instructions.

C. The Contractor (or designee) shall maintain master logbooks for each phase of installation, startup and testing activities specified herein. Each logbook shall include signal, loop or control strategy tag number, equipment identification, description and space for sign-off dates, Contractor signature and Engineer signature. Example test documentation specific to each phase of testing shall be approved prior to initiation of that testing, as specified hereinabove.

D. All test data shall be recorded on test forms, previously approved by the Engineer. When each test has been successfully completed, a certified copy of all test results shall be furnished to the Engineer together with a clear and unequivocal statement that all specified test requirements have been met and that the system is operating in accordance with the Contract Documents.

E. The Engineer will review test documentation in accordance with the Contract Documents and will give written notice of the acceptability of the tests within 10 days of receipt of the test results.

PART 2 -- PRODUCTS

(NOT USED)

PART 3 -- EXECUTION

(NOT USED)

- END OF SECTION -

SECTION 17071 - FACTORY ACCEPTANCE TEST

PART 1 -- GENERAL

1.01 THE REQUIREMENT

A. The Contractor shall perform a Factory Acceptance Test on the Control and Information System as specified herein to demonstrate compliance with the Contract Documents.

1.02 RELATED WORK SPECIFIED ELSEWHERE

A. Section 17000 – Control and Information System Scope and General Requirements

B. Section 17070 – Control and Information System Testing, General

C. Section 17072 – Field Testing

D. Section 17073 – Final Acceptance Test

1.03 FACTORY ACCEPTANCE TEST

A. The Control and Information System equipment shall not be shipped until the Contractor receives notice of acceptability of the factory tests.

B. Each item of equipment shall be fully factory inspected, calibrated and tested for function, operation and continuity of circuits. Exceptions shall be approved in writing by the Engineer.

C. Each subsystem shall be fully factory tested for function and operation.

D. System performance shall be tested using a fully integrated system, including all software and hardware. To achieve this, the entire control system, including all peripheral devices and all interconnecting cables (field instruments are not included in this requirement), shall be assembled on the factory test floor and the complete operational program loaded and simulated inputs applied.

E. All hardware and software required to perform the specified testing shall be furnished by the Contractor at no additional cost to the Owner.

F. The factory testing shall demonstrate all aspects of system sizing and timing including:

   1. Monitoring and control scan times at the PLC level.

   2. Response times at the operator workstation level.

G. The overall system as well as individual component hardware shall be tested under conditions of power failure to ensure proper response as specified herein.

H. Operator Workstation Operation - This demonstration shall provide proof of system operation on an individual subsystem basis first, and then in the expected operating environment. Both normal and abnormal operating modes shall be demonstrated. Operator workstation testing shall include the following:

1. Demonstrate proper operation, under both normal and abnormal conditions of the operator workstation application software (SCADA, remote alarm dial-up, etc.). This shall include demonstration of system on-line diagnostics, fail-over features, reconfiguration operations, system initialization and restart, software fault tolerance, error detection and recovery, communications, and all additional features necessary to assure the successful operation of the system.

2. Demonstrate the standard features of the system. This shall include proof of operation of the process control database generator, the display generator, data storage and retrieval functions, data acquisition and control, trending functions, and reporting functions.

3. Demonstrate the configuration of the system to verify conformance with the Contract Documents. This shall include graphic displays and vectoring, operator interface functions, trending, reports, alarm management, security system configuration, etc.

4. The system shall be operated with data input/output with the PLC's and associated panels to prove operation of all workstation functions.

5. The testing in Items 2 and 3 above may be performed concurrently (i.e., the standard and configured features of the system may be demonstrated simultaneously).

I. PLC Operation - All functions comparable to those demonstrated for the operator workstations shall be demonstrated on the PLC's. This shall include the following:

1. On-line and off-line diagnostics.

2. For redundant units, fail-over operation and reconfiguration.

3. System initialization and restart.

4. Network communications, including fieldbus communications where required.

5. Non-volatility of memory.

6. Operation of all control logic shall be demonstrated as described herein.

J. Process I/O Simulation - Process input/output simulation for PLC's shall be performed with a manual simulation control panel, a separate programmable logic controller, network-based simulation software, analog signal generators, and/or jumpering of discrete signals between outputs and associated inputs, or some combination of these. Alternate process

I/O systems such as plug-in circuit cards or I/O test modules may be utilized subject to approval by the Engineer to provide the specified simulation functions. The simulation system shall provide analog and discrete I/O hardware devices in sufficient quantity to allow complete and thorough testing of the control strategies and functions of the system. The process I/O simulation system shall be used in several ways as follows:

1. To provide a means of communications checkout from the High Service Pump Station Master Control Panel, MCP-HS (PLC-10), and WTP SCADA HMI through the various levels of software in the PLC's and to the process, i.e., the simulation panel. Likewise, a discrete or analog input shall be initiated from the simulation panel and the result monitored at the workstations.

2. Alarm response to discrete status changes or analog value limits shall be verified. Database entries or attributes such as engineering units and conversion equations shall be verified by varying analog inputs.

3. To provide data for use at all levels of the control system at the time of system integration.

K. Control Strategy Testing - Provision shall be made to test all control strategies to prove the integrity of each strategy and the process control language in which it is implemented. For each control strategy, all functions shall be tested individually (where possible) and collectively to verify that the control strategy performs as described herein and as required for overall functionality within the control system.

PART 2 -- PRODUCTS

(NOT USED)

PART 3 -- EXECUTION

(NOT USED)

- END OF SECTION -

SECTION 17072 - FIELD TESTING

PART 1 -- GENERAL

1.01 THE REQUIREMENT

A. The Contractor shall perform field testing on the Control and Information System as specified herein to demonstrate compliance with the Contract Documents.

1.02 RELATED WORK SPECIFIED ELSEWHERE

A. Section 17000 – Control and Information System Scope and General Requirements

B. Section 17070 – Control and Information System Testing, General

C. Section 17071 – Factory Acceptance Test

D. Section 17073 – Final Acceptance Test

1.03 GENERAL REQUIREMENTS

A. Control system start-up and testing shall be performed to ensure that all plant processes shall be systematically and safely placed under digital control in the following order:

1. Primary elements such as transmitters and switch devices shall be calibrated and tested as specified in Sections 17600, 17700, and 17800.

2. Each final control element shall be individually tested as specified hereinafter.

3. Each control loop shall be tested as specified hereinafter.

4. Each control strategy shall be tested under automatic digital control as specified hereinafter.

5. The entire control system shall be tested for overall monitoring, control, communication, and information management functions, and demonstrated for system availability as specified hereinafter.

B. System start-up and test activities shall include the use of water, if necessary, to establish service conditions that simulate, to the greatest extent possible, normal operating conditions in terms of applied process loads, operating ranges and environmental conditions.

C. Each phase of testing shall be fully and successfully completed and all associated documentation submitted and approved prior to the next phase being started. Specific exceptions are allowed if written approval has been obtained in advance from the Engineer.

122711BR

1.04 CONTRACTOR'S RESPONSIBILITIES

A. The Contractor shall ensure that all mechanical equipment, equipment control panels, local control panels, field instrumentation, control system equipment and related equipment and/or systems are tested for proper installation, adjusted and calibrated on a loop-by-loop basis prior to control system startup to verify that each is ready to function as specified. Each test shall be witnessed, dated and signed off by both the Contractor (or designee) and the Engineer upon satisfactory completion.

B. The Contractor shall be responsible for coordination of meetings with all affected trades. A meeting shall be held each morning to review the day's test schedule with all affected trades. Similarly, a meeting shall be held each evening to review the day's test results and to review or revise the next day's test schedule as appropriate.

C. The Contractor shall ensure that the electrical subcontractor conforms to the start-up, test and sign-off procedures specified herein to assure proper function and coordination of all motor control center control and interlock circuitry and the transmission of all discrete and/or analog signals between equipment furnished by the electrical subcontractor and the control system specified herein.

1.05 FINAL CONTROL ELEMENT TESTING

A. The proper control of all final control elements shall be verified by tests conducted in accordance with the requirements specified herein.

B. All modulating final control elements shall be tested for appropriate speed or position response by applying power and input demand signals, and observing the equipment for proper direction and level of reaction. Each final control element shall be tested at 0, 25, 50, 75, and 100 percent of signal input level and the results checked against specified accuracy tolerances. Final control elements, such as VFD’s, that require turndown limits shall be initially set during this test.

C. All non-modulating final control elements shall be tested for appropriate position response by applying and simulating control signals, and observing the equipment for proper reaction.

1.06 LOOP CHECKOUT

A. Prior to control system startup and testing, each monitoring and control loop shall be tested on an individual basis from the primary element to the final element, including the operator workstation or loop controller level, for continuity and for proper operation and calibration.

B. Signals from transducers, sensors, and transmitters shall be utilized to verify control responses. Simulated input data signals may be used subject to prior written approval by the Engineer. All modes of control shall be exercised and checked for proper operation.

C. The accuracy of all DAC's shall be verified by manually entering engineering unit data values at the operator workstation and then reading and recording the resulting analog output data.

D. The accuracy of all ADC's shall be verified using field inputs or by manually applying input signals at the final controller, and then reading and recording the resulting analog input data at the operator workstation.

E. Each loop tested shall be witnessed, dated and signed off by both the Contractor (or designee) and the Engineer upon satisfactory completion.

1.07 CONTROL SYSTEM STARTUP AND TESTING

A. Control system startup and testing shall be performed to demonstrate complete compliance with all specified functional and operational requirements. Testing activities shall include the simulation of both normal and abnormal operating conditions.

B. All digital hardware shall be fully inspected and tested for function, operation and continuity of circuits. All diagnostic programs shall be run to verify the proper operation of all digital equipment.

C. Final control elements and ancillary equipment shall be tested under start-up and steady-state operating conditions to verify that proper and stable control is achieved using local area control panels, motor control center circuits, and local field mounted control circuits. All hardwired control circuit interlocks and alarms shall be operational. The control to final control elements and ancillary equipment shall be tested using both manual and automatic (where provided) control circuits.

D. Signals from transducers, sensors, and transmitters shall be utilized to verify control responses for final control elements. Simulated input data signals may be used subject to prior written approval by the Engineer.

E. Each control strategy shall be tested to verify the proper operation of all required functions. The control system start-up and test activities shall include procedures for tuning all control loops incorporating PID control modules, and for adjusting and testing all control loops as required to verify specified performance.

F. The control system start-up and test activities shall include running tests to prove that the Instrumentation, Control and Information System is capable of continuously, safely and reliably regulating processes, as required by the Contract, under service conditions that simulate, to the greatest extent possible, normal plant operating ranges and environmental conditions.

G. A witnessed functional acceptance test shall be performed to demonstrate satisfactory performance of individual monitoring and control loops and control strategies. At least one test shall be performed to verify that the control and instrumentation system is capable of simultaneously implementing all specified operations.

H. Each loop and control strategy test shall be witnessed and signed off by both the Contractor (or designee) and the Engineer upon satisfactory completion.

1.08 FACILITY STARTUP COORDINATION

A. Facility start-up shall comply with requirements specified in the Contract Documents and those requirements specified herein. Facility start-up shall commence after all previously described start-up and test activities have been successfully completed and shall demonstrate that the Instrumentation, Control and Information System can meet all Contract requirements with equipment operating over full operating ranges under actual operating conditions.

B. The control system start-up period shall be coordinated with process startup activities and shall be extended as required until all plant processes are fully operational and to satisfy the Engineer that all control system Contract requirements have been fulfilled in accordance with the Contract Documents.

C. The instrumentation subcontractor's personnel shall be resident at the facility to provide both full time (eight hours/day, five days/week) and 24 hours on call (seven days/week) support of operating and maintenance activities for the duration of the start-up period.

D. At least one qualified control systems technician shall be provided for control system startup and test activities (at least two when loop checkout is being performed).

PART 2 -- PRODUCTS

(NOT USED)

PART 3 -- EXECUTION

(NOT USED)

- END OF SECTION -

SECTION 17073 - FINAL ACCEPTANCE TEST

PART 1 -- GENERAL

1.01 THE REQUIREMENT

A. The Contractor shall perform the Final Acceptance Test on the Control and Information System as specified herein to demonstrate compliance with the Contract Documents.

1.02 RELATED WORK SPECIFIED ELSEWHERE

A. Section 17000 – Control and Information System Scope and General Requirements

B. Section 17070 – Control and Information System Testing, General

C. Section 17071 – Factory Acceptance Test

D. Section 17072 – Field Testing

1.03 AVAILABILITY DEMONSTRATION AND FINAL SYSTEM ACCEPTANCE

A. Upon completion of all control system startup activities and prior to final system acceptance, the Contractor shall demonstrate that the availability of the entire control system, including operation under conditions of digital equipment fail-over, initiated either automatically or manually, shall be not less than 99.8 percent during a 30-day availability test period. The Owner shall be given two (2) weeks notice of the starting date of the 30-day availability test.

B. For purposes of determining availability figures, downtime of each system or portions of each system resulting from the causes specified hereunder will not be considered system failures.

1. Downtime of any network-connected device that is automatically backed-up upon failure shall not be considered a system failure provided that the downtime of the failed component does not exceed 24 hours.

2. Downtime of a PLC that is not automatically backed-up shall be considered a system failure if the downtime of the failed controller exceeds one (1) hour.

3. Downtime of a portion of the system resulting from failure of any field sensor shall not be considered a system failure provided that the system operates as specified under this condition.

4. Downtime of the following devices shall not be considered a system failure provided the failed device is repaired within the specified time:

   a. Operator Interface Units (24 hours)

b. SCADA Workstations (24 hours)
c. SCADA Servers (24 hours)
d. Communication interfaces (eight hours)
e. Process control system networks (eight hours)
f. Off-line (optical, etc.) storage units (24 hours)
g. UPS unit (24 hours)

5. Total shutdown of a single PLC resulting from a software fault shall be considered a system failure.

6. An erroneous command to the process that can be specifically related to a software fault shall be considered as one (1) hour of downtime.

7. The inoperability of any subsystem resulting from a software fault shall be considered a system failure.

8. The failure of the same component more than one time during the 30-day test shall be considered a system failure.

C. If the system fails the 30-day availability test, the 30-day test period shall be restarted after the failed component or software is repaired/replaced and full operation is restored. The system shall be demonstrated for the full 30-day period following the restart.

D. The Contractor shall submit an availability demonstration report that shall state that all system availability requirements have been met.

PART 2 -- PRODUCTS

(NOT USED)

PART 3 -- EXECUTION

(NOT USED)

- END OF SECTION -

SECTION 17080 - QUALITY ASSURANCE

PART 1 -- GENERAL

1.01 THE REQUIREMENT

A. It is the intent of these Specifications and Drawings to secure high quality in all materials, equipment and workmanship in order to facilitate operations and maintenance of the facility. The Contractor shall provide equipment and services to meet this intent.

1.02 REFERENCE SPECIFICATIONS, CODES AND STANDARDS

A. All work shall be installed in accordance with the National Electric Code, National Electric Safety Code, OSHA, State, local and other applicable codes.

1.03 QUALITY ASSURANCE - GENERAL

A. All equipment and materials shall be new and the products of reputable recognized suppliers having adequate experience in the manufacture of these particular items.

B. For uniformity, only one manufacturer will be accepted for each type of product.

C. All equipment shall be designed for the service intended and shall be of rugged construction, of ample strength for all stresses that may occur during fabrication, transportation, and erection as well as during continuous or intermittent operation. They shall be adequately stayed, braced and anchored and shall be installed in a neat and workmanlike manner. Appearance and safety, as well as utility, shall be given consideration in the design of details.

D. All components and devices installed shall be standard items of industrial grade, unless otherwise noted, which shall be of sturdy and durable construction and be suitable for long, trouble-free service.

E. Electronic components shall be de-rated to assure dependability and long-term stability.

F. Printed circuit boards in field mounted equipment shall be suitable for the specified environmental conditions.

G. Alignment and adjustments shall be non-critical, stable with temperature changes or aging and accomplished with premium grade potentiometers.

H. Components of specially selected values shall not be inserted into standard electronic assemblies in order to meet the performance requirements of this specification.

1227111BR

1.05 OPTIONAL EQUIPMENT

A. Optional or substituted equipment or both requiring changes in details or dimensions required to maintain all structural, mechanical, electrical, control, operating, maintenance or design features incorporated in these Specifications and Drawings shall be made at no additional cost to the Owner. In the event that the changes are necessary, calculations and drawings showing the proposed revisions shall be submitted for approval. The Contractor shall coordinate all changes with other affected trades and contracts and pay all additional charges incurred.

1.06 GUARANTEE

A. The instrumentation subcontractor through the Contractor shall install, maintain and guarantee the Instrumentation, Control and Information System as specified under the General Conditions and Division 1 of the Specifications. Maintenance personnel provided by the instrumentation subcontractor shall instruct the Owner's personnel in the operation, adjustment, calibration and repair of the equipment being serviced. All preventive and corrective activities shall be documented with service reports, which shall identify the equipment being serviced, state the condition of the equipment, describe all work performed and list materials used. A copy of all service reports shall be delivered to the Owner on the day the work is performed.

B. The instrumentation subcontractor shall provide the services of factory-trained service technician(s) at least twice during the guarantee period, for the purpose of performing preventive hardware maintenance.

C. Corrective hardware and software maintenance during the guarantee period shall be performed in accordance with the requirements of Division 1 and, in addition, shall meet the following requirements:

1. Corrective hardware maintenance shall be performed by factory-trained service technician(s) specifically trained to service the digital equipment provided. Technicians possessing suitable training and experience shall be provided to perform corrective maintenance on all other equipment. The hardware service technician(s) shall be available on-site within 24 working hours after notification by the Owner.

2. Corrective software maintenance shall be performed for software provided by the instrumentation subcontractor and incorporated into the system prior to the completion of system commissioning. Software service programmer(s) shall be available for consultation within four business hours and, if required, on-site within 16 business hours after notification by the Owner. Corrective software maintenance shall include the supply, installation and startup of all application software upgrades released during the guarantee period.

3. Corrective hardware and software maintenance performed during the guarantee period shall be performed at no cost to the Owner.

4. As used herein, the term "working hours" shall be defined as those of the treatment facility (seven days per week, 24 hours per day). The term "business hours" shall be defined as the hours between 8:00 a.m. and 5:00 p.m., local time, Monday through Friday; excluding holidays.

5. The guarantee period shall commence upon final acceptance of the completed treatment facility in accordance with the provisions of the Contract Documents.

D. The instrumentation subcontractor shall submit to the Owner a proposed maintenance agreement incorporating the following features:

1. Extension of preventive hardware maintenance services as described above for a period of up to five years from the expiration of the warranty period.

2. Provisions for corrective hardware and/or software maintenance work on a will-call basis for a period of up to five years from the expiration of the warranty period. Corrective maintenance work shall be performed by properly trained personnel as described above.

E. The proposed agreement shall include provisions for payment based upon an annual fee for preventive maintenance and cost plus expenses for corrective maintenance work. The portion dealing with corrective maintenance shall be written to include corrective maintenance caused by actions of the Owner during the warranty period and shall contain clauses for re-negotiation of contract prices based upon changes in recognized economic indicators published by the United States Department of Commerce.

1.07 SHIPPING HANDLING AND STORAGE

A. In addition to shipping, handling and storage requirements specified elsewhere in the Contract Documents, air conditioning/heating shall be provided for storage of all field instrumentation, panels, digital equipment and ancillary devices to maintain temperatures between 20 and 25 degrees C and relative humidity 40 to 60 percent without condensation. The air shall be filtered and free of corrosive contaminants and moisture.

1.08 FABRICATION

A. Fabrication of all equipment shall conform to the codes and standards outlined in this Section, and other portions of the Contract Documents.

B. The Engineer may inspect the fabricated equipment at the factory before shipment to job site. The Contractor shall provide the Engineer with sufficient prior notice so that an inspection can be arranged at the factory. Inspection of the equipment at the factory by the Engineer will be made after the manufacturer has performed satisfactory checks, adjustments, tests and operations.

C. Equipment approval at the factory only allows the equipment to be shipped to the project site. The Contractor shall provide for the proper storage, installation and satisfactory start-up and operation of the equipment to the satisfaction of the equipment manufacturer, the instrumentation subcontractor, and the Engineer.

1.09 INSTALLATION

A. All instrumentation and control system installation work, whether new construction or modifications to existing equipment/panels/structures, shall conform to the codes and standards outlined in this Section, and other portions of the Contract Documents.

B. The instrumentation subcontractor shall assign a competent representative who shall provide full time coordination and supervision of all on-site instrumentation and control system construction work from commencement of construction through completion and final acceptance.

C. All labor shall be performed by qualified craftsmen in accordance with the standards of workmanship in their profession and shall have had a minimum of three years of documented experience on similar projects.

D. All equipment and materials shall fit properly in their installations. Any required work to correct improperly fit installations shall be performed at no additional expense to the Owner.

E. All work shall be performed in a neat and workmanlike manner. All hardware and instrumentation shall be installed in accordance with requirements specified herein, in accordance with industry best practices, in accordance with manufacturers' recommendations, and in a manner suitable for ease of operation, inspection, and maintenance. All wiring shall be neatly bundled, run in wireway, and terminated. All spare wiring shall be neatly coiled and clearly labeled at both ends for future use by the Owner. Any work not meeting these requirements shall be corrected at no expense to the Owner.

F. Sufficient common-mode and differential-mode noise rejection shall be provided to insure operation of the plant process control system to meet all specification requirements. General practice shall include:

   1. Maintaining crossings between noisy wires and signal wires at right angles.

   2. Maintaining separation between noisy wires and signal wires as wide as practical.

   3. Grounding all signals, shields and power supplies at the process control unit or local control panel.

   4. Providing passive filters on signals with time constant compatible with scan intervals and overvoltage protection.

   5. Eliminating cable splices. All splices in instrumentation and control system signal and network cables shall be approved in advance by the Engineer.

   6. Providing a floating output for transmitters that have their own power sources.

G. DC and AC power grounding shall be performed in accordance with the digital hardware manufacturer's recommendations as well as all applicable code requirements.

H. The case of each field instrument and control panel shall be grounded in compliance with the National Electric Code.

I. Power wires shall be separated from parallel-running signal wires by the following minimum spacing:

CIRCUIT VOLTAGE (VAC)	MINIMUM SPACING (IN.)
120	12
240	18
480	18
2000 and above	24

J. The Contractor shall provide all required cutting, drilling, inserts, supports, bolts, and anchors, and shall securely attach all equipment and materials to their supports. Embedded supports for equipment furnished under this Division shall be provided and installed as shown specified herein and shown on the Drawings.

K. Following acceptance of the factory tests by the Engineer, and in accordance with the construction schedule, the Contractor shall commence installation of the digital control system hardware. Digital system equipment items shall not be installed, however, until all architectural, mechanical, HVAC and electrical work has been completed in the equipment rooms, MCC's, control rooms and all structural and/or mechanical work has been completed within 50 feet of equipment locations.

L. Upon completion of the above construction work, the Contractor shall request an inspection of the above-named areas. The Engineer will issue a written approval to proceed with delivery and installation only after being satisfied that all work described above has been properly performed. Digital equipment shall remain at the factory site or storage prior to approval for delivery to the project site. Partial shipments may be required to meet construction schedule requirements.

PART 2 -- PRODUCTS

(NOT USED)

PART 3 -- EXECUTION

(NOT USED)

- END OF SECTION -

SECTION 17100 - CONTROL AND INFORMATION SYSTEM HARDWARE, GENERAL

PART 1 -- GENERAL

1.01 THE REQUIREMENT

A. The process control system is physically and functionally distributed between PLC equipped control panels, motor control panels, field panels, operator workstations and appurtenances.

B. Although manual control facilities shall be provided adjacent to each final control element or in local control panels, such facilities are for testing, maintenance and local monitoring purposes only and shall not be regarded as backup to the PLC based control system.

C. Major plant control system digital equipment items are shown on the Drawings and include but are not limited to the following:

1. One (1) High Service Pump Station Master Control Panel, MCP-HS (PLC-10) with the following (at a minimum): OIU, Ethernet/IP communications interface, Ethernet/IP dynamic vibration monitor, discrete inputs/outputs and analog inputs/outputs.

2. Ethernet communications link between High Service Pump Station Master Control Panel, MCP-HS (PLC-10) and the High Service Pump VFDs (Variable Frequency Drives).

3. Ethernet communications link (fiber optic) between the High Service Pump Station Master Control Panel, MCP-HS (PLC-10), and the existing Mixed Media Switch / Patch panel (WTP PLC network).

1.02 RELATED WORK SPECIFIED ELSEWHERE

A. Section 17120 – Programmable Logic Controllers

B. Section 17140 – Operator Workstations

C. Section 17180 – Local Area Network

D. Section 17185 – Data Highway Network

1.03 DIGITAL HARDWARE CONFIGURATIONS

A. The digital hardware configuration shown on the SCADA Network Diagram (Drawing I-02) depicts overall system configuration requirements. System design shall be based upon this concept and shall provide an overall digital system availability of 99.8 percent under

the conditions specified in Section 17073. Unless otherwise specified, designs that vary from this concept will be rejected.

B. All discrete and analog data acquisition, pre-processing, storage and process control functions shall be performed at the PLC level. Operator workstations shall be fully independent devices, individually connected to the data highway local area network.

C. Communications between the between the High Service Pump Station Master Control Panel, MCP-HS (PLC-10) and the plant SCADA system shall be Ethernet/IP.

D. No other exceptions will be considered.

PART 2 -- PRODUCTS

2.01 GENERAL SYSTEM HARDWARE REQUIREMENTS

A. Large scale integrated (LSI) circuit construction shall be employed unless otherwise specified.

B. Modular construction shall be employed to simplify maintenance and to provide for future hardware expansion. Plug-in, modular PCB's or modules shall be employed for easy removal to permit exposure of circuit wiring, components and test points. Extender boards shall be provided if necessary to permit PCB's to be completely exposed for testing purposes.

C. Keying schemes shall be used to prevent PCB misplacement.

D. Each process control system local area network connected device shall continuously perform on-line diagnostics and failure reporting to the operator workstations.

E. The temperature inside each enclosure containing digital hardware (i.e., cabinet, panel or console) shall be continuously monitored and shall generate an alarm to the nearest PLC if the temperature rises to an adjustable, preset high temperature.

2.02 DIGITAL SYSTEM FAILURE DETECTION AND FAIL-OVER REQUIREMENTS

A. No degradation in control system performance shall occur when the system is operating in a partial failure or an equipment fail-over mode. Likewise, no degradation of system performance shall occur while a backed up system component is undergoing preventive or corrective maintenance.

B. All devices connected to the data highway local area network shall be self-checking and shall report their operational status to the operator workstations as whether "normal" or "failed".

PART 3 -- EXECUTION

3.01 REQUIREMENTS

A. Refer to Section 17000, Part 3.

- END OF SECTION -

SECTION 17120 - PROGRAMMABLE LOGIC CONTROLLERS

PART 1 -- GENERAL

1.01 THE REQUIREMENT

A. The Contractor shall furnish, test, install and place in satisfactory operation all programmable logic controllers, with all spare parts, accessories, and appurtenances as herein specified and as shown on the Drawings.

1.02 RELATED WORK SPECIFIED ELSEWHERE

A. Section 17000 – Control and Information System Scope and General Requirements

B. Section 17060 – Signal Coordination Requirements

C. Section 17100 – Control and Information System Hardware - General

D. Section 17125 – PLC Operator Interface Units

E. Section 17170 – Portable Notebook Computers

F. Section 17185 – Data Highway Network

G. Section 17190 – Uninterruptible Power Systems

H. Section 17500 – Enclosures, General

1.03 TOOLS, SUPPLIES AND SPARE PARTS

A. Tools, supplies and spare parts shall be provided as specified in Section 17050 - Tools, Supplies, and Spare Parts. In addition, the following specific spare parts items shall be provided:

1. One of each type of CPU and co-processor module for PLC equipment furnished under this Contract.

2. One of each type of input/output module for PLC equipment furnished under this Contract.

3. One of each type and size of PLC and equipment power supply furnished under this Contract.

PART 2 -- PRODUCTS

2.01 PROGRAMMABLE LOGIC CONTROLLERS - GENERAL

A. The CONTRACTOR shall furnish programmable controllers (PLC's) as specified herein and as shown on the Drawings. PLC's shall be provided complete with power supplies, I/O cards, special function cards, instructions, memory, input/output capacity, and appurtenances to provide all features and functions as described herein.

B. All components of the PLC system shall be of the same manufacturer; who shall have fully tested units similar to those being furnished in an industrial environment with associated electrical noise. The PLC system shall have been tested to meet the requirements of NEMA Standard ICS 2-230 (Arc Test) and IEEE C37.90.1 (SWC). The processing unit shall perform the operations functionally described herein based on the program stored in memory and the status of the inputs and outputs.

C. The programmable controller shall be designed to operate in an industrial environment. The PLC shall operate in an ambient temperature range of 0 – 60 degrees Celsius and a relative humidity of 5-95 percent, non-condensing. The PLC shall operate on supply voltages of 90-132 VAC at 47-63 Hz. An integral fuse shall be provided on the power supply for short circuit protection and shall be front panel accessible. Integral overcurrent and under-voltage protection shall be provided on the power supply.

D. Each new PLC and all existing PLC (to be upgraded and/or reused), and all PLC remote I/O chassis shall be equipped with two new power supplies configured as a redundant pair. If one power supply fails, the PLC or remote I/O shall continue to operate without disruption and the power supply failure shall be indicated in a memory register for remote monitoring by the SCADA system.

E. System configuration shall be as shown on the SCADA Network Diagram (Drawing I-02). PLC memory, communications, I/O modules, and processor shall be adequately sized for all control functions specified.

F. The High Service Pump Station Master Control Panel, MCP-HS (PLC-10), programmable logic controller (PLC) shall be an Allen-Bradley Control Logix 1756-L82E.

2.02 PROCESSORS

A. The processor and its associated memory shall be enclosed in a modular enclosure. LED-type indicating lights integral with the processor module shall indicate operational status and faults. Capacitors shall maintain processor RAM as long as required to write the current program to non-volatile memory. Non-volatile memory shall be provided to store a backup of the user program upon loss of power. The user program shall include current values of all variables such as set-points, timer values, mode selections, etc. such that the PLC logic will return to an operable state upon loading the backup program. The PLC shall load the backup program and data to RAM upon power up following a power failure.

B. The amount of RAM to be provided with each PLC shall be adequate for all specified functions, with at least 40% of the RAM reserved for future use. Non-volatile storage shall be provided with each PLC on a 1 GB Secure Digital memory card.

C. The instruction set for the PLC shall include the following, as a minimum:

1. Relay type instructions
2. Counter and timer instructions
3. Comparison instructions (equal, greater than, limit tests, etc.)
4. Integer and floating point mathematical instructions
5. Advanced math and trigonometric functions
6. Statistical instructions
7. Matrix and array instructions
8. Logical instructions (and, not, or, etc.)
9. BCD conversion instructions
10. Bit modification, moving, and shift instructions
11. File instructions (search, copy, fill, etc.)
12. Diagnostic instructions
13. Sequencer instructions
14. Program control instructions (jump, goto, subroutine, etc.)
15. PID control loops
16. Block read and write capability
17. Send/receive messages
18. Immediate I/O and communications update instructions

2.03 COMMUNICATIONS

A. PLC communications shall be based on Ethernet/IP as specified in Section 17185 - Networks and as shown on the SCADA Network Diagram (Drawing I-02). Each PLC Ethernet module shall be configured for communication on the PLC Network.

B. In addition to a communications port for the network, communication ports shall be provided for any other devices required (e.g., integrated display computers, operator interface units, etc.) plus an additional communication port for connection to a notebook computer.

2.04 INPUT/OUTPUT SUBSYSTEMS

A. Input/output hardware shall handle the required number of process inputs and outputs plus a minimum of 20 percent active prewired spares for each I/O type furnished.

B. Discrete inputs shall be 24 VDC signal (integral to PLC) from dry field contacts. Discrete outputs shall be 24 VDC outputs from the PLC or dry relay contacts (2A minimum) as required. The PLC shall provide momentary and latched outputs as required to interface with motor controls and external devices. Interposing relays shall be provided where required to interface with field equipment. Interposing relays shall be as specified in Section 17550. Lightning/surge protection shall be provided as specified in the Section 17560 entitled “Transient Voltage Surge Suppression Devices”. Electrical isolation shall be provided where required.

C. Where required, RTD input modules shall have a minimum resolution of 0.15 degrees C and be capable of accepting a 100 ohm Platinum RTD.

D. Lightning/surge protection shall be provided as specified in Section 17560 - Transient Voltage Surge Suppression Devices.

E. Signal and control circuitry to individual input/output modules shall be arranged such that module failure shall not disable more than one half of the control loops within any group of controlled equipment (e.g., one pump out of a group of three pumps, two pumps out of four, etc.). Where possible, individual control loops and equipment shall be assigned to individual modules such that failure of the module will disable only one loop or piece of equipment.

2.05 POWER SUPPLIES

A. Loop power and panel equipment power supplies shall be provided with the PLC as required to meet 150% of the specified installed I/O power requirements plus spares under full load conditions. Power supplies shall be modular units, shall be fully redundant and shall alarm the PLC upon failure. Power supplies shall have a line regulation of 0.05% and meet the environmental and power requirements specified herein for the PLC. Power supplies shall be furnished with isolated lightning/surge protection systems as specified in the Section entitled “Transient Voltage Surge Suppression Devices”. Loop and equipment power supplies shall be manufactured by Phoenix contact or PULS; no substitutions.

B. Each Allen Bradley ControlLogix PLC chassis for PLC-10 shall be powered by Allen Bradley ControlLogix-XT series redundant 120VAC power supplies, catalog number 1756-PAXTR. For each power supply, a digital power supply failure annunciator signal shall be wired to a digital input in PLC-10. Furnish all required redundant power supply cables and adapters.

2.06 FUSED SIGNAL TERMINAL BLOCKS AND CIRCUIT PROTECTION SYSTEMS

A. Internal I/O Terminal Block System: All discrete and analog input / output (I/O) terminal blocks shall be DIN rail mounted, modular, multifunction, fused terminal blocks with individual LED blown fuse indicators for overcurrent protection of each discrete and analog I/O loop; each complete with lever disconnect, fuse holder, removable fuse and fuse cover for integral short circuit protection. Terminal block systems shall be as manufactured by Phoenix Contact, or Engineer approved equal. Each unit shall handle the required number

of process inputs and outputs plus a minimum of 10 percent active pre-wired spares for each I/O type furnished, plus a minimum of 20 percent spare I/O module space for the addition of future circuit cards or modules.

B. Field Wiring Terminal Block System: Within the panel and following the I/O terminal block system, a DIN rail mounted, modular, field wiring terminal block system with modular, removable, transient voltage surge suppression and other signal isolation and protective devices (with integral fault status indication and status output to the PLC); thereby providing lightning/surge protection for all field device discrete and analog signal loop(s). Field wiring terminal block systems shall be Plugtrab IQ series, as manufactured by Phoenix Contact, or Engineer approved equal. Refer to Sections 17560 for additional lightning/surge protection requirements.

C. Field wiring terminal blocks for circuits requiring interposing relays for “dry contact” PLC control outputs shall be provided with removable, modular type relays, 24 VDC rated coils, 240VAC, 10 amp rated, form C dry contact outputs, and coil side LED indicator.

D. Field wiring terminal blocks for circuits requiring interposing relays for “dry contact” PLC monitoring inputs shall be provided with removable, modular type relays, 120 VAC rated coils (or other voltage as required), 24VDC, 5 amp rated, form C dry contact outputs, and coil side LED indicator.

E. All loops shall be individually isolated. All terminal block wiring connections shall be push-in or screw type and shall accept 24-14 AWG wire; rated for the signals carried and shall be labeled.

F. All panel wiring between all internal and field wiring terminal blocks shall be color coded in accordance with ISA standards and individually labeled by loop tag name. All internal and field wiring terminal block wiring connections shall be individually labeled.

2.07 PROGRAMMING AND SIMULATION SOFTWARE

A. The PLC programming and configuration software shall be the manufacturer's latest version. The software package shall consist of all simulation, programming, configuration, and documentation software needed to place the control and information system in satisfactory operation. Programming shall be accomplished through the use of function block logic and other IEC61131-3 languages to the maximum extent possible and shall be fully documented throughout the code such that a programmer unfamiliar with the program can quickly understand how it functions.

B. The simulation, configuration and programming software shall support communication over the Ethernet Network to implement its functions remotely as well as through connection to the local PLC processor via a local PLC communications port. All necessary hardware required to allow a notebook computer to perform local PLC configuration and programming shall be provided. Configuration and programming software shall be Rockwell Automation Studio 5000 Logix Designer Professional Edition with DVD-ROM media and user manuals, or engineer approved equal. Simulation software shall be Rockwell Automation RS Logix Emulate, or engineer approved equal.

C. The PLC programming and simulation software shall be registered in the OWNER’s name.

D. One (1) stand-alone license of each simulation, configuration and programming software package shall be provided.

PART 3 - EXECUTION

3.01 REQUIREMENTS

A. Refer to Section 17000, Part 3.

- END OF SECTION -

SECTION 17125 - PLC OPERATOR INTERFACE UNITS

PART 1 -- GENERAL

1.01 THE REQUIREMENT

A. The Contractor shall furnish, test, install and place in satisfactory operation all operator interface units, with all spare parts, accessories, and appurtenances as herein specified and as shown on the Drawings.

1.02 RELATED WORK SPECIFIED ELSEWHERE

A. Section 17000 – Control and Information System Scope and General Requirements

B. Section 17100 – Digital System Hardware Configuration

C. Section 17120 – Programmable Logic Controllers

PART 2 -- PRODUCTS

2.01 OPERATOR INTERFACE UNIT – COLORGRAPHIC TOUCH SCREEN

A. An Operator Interface Unit (OIU) shall be provided to view and change PLC monitoring and control parameters and to display alarm messages using a graphical user interface. The OIU shall provide the following features as a minimum.

1. Color TFT LCD display
2. Touch screen interface
3. Minimum of 4 MB Flash EPROM application memory
4. Minimum of 256 kB SRAM data backup memory
5. PLC network interface module and driver complete with interface cable
6. Sound and buzzer output
7. Windows-based configuration software complete with download cable
8. Operating Voltage: 24VDC (internal or via independent power supply)
9. Enclosure Rating: NEMA 12/4X to match the associated PLC cabinet rating
10. Environment: 0-50°C, 20-85% relative humidity, non-condensing

B. The High Service Pump Station Master Control Panel, MCP-HS (PLC-10), OIU shall be a 10.4” Allen-Bradley PanelView Plus 7 (Catalogue No. 2711P-T10C21D8S), or equivalent by Phoenix Contact.

PART 3 -- EXECUTION

3.01 REQUIREMENTS

A. The OIU shall be configured to display all PLC I/O, setpoints, and parameters. All equipment failures shall be alarmed. PLC I/O values and operator-entered setpoints shall be displayed with associated units and service descriptions. Menus shall be provided to navigate between screens of different equipment items. Displays shall be arranged in a hierarchical structure with displays for specific equipment items grouped together. Additional functionality shall be as specified elsewhere in this Division.

B. All necessary configuration and programming software shall be provided on CD media or other suitable digital media storage device and turned over to the Owner.

C. Refer to Section 17000 for additional requirements.

- END OF SECTION -

SECTION 17185 – ETHERNET NETWORK

PART 1 -- GENERAL

1.01 THE REQUIREMENT

A. The Contractor shall furnish, test, install and place in satisfactory operation one data highway network, with all spare parts, accessories, and appurtenances as herein specified and as shown on the Drawings.

1.02 RELATED WORK SPECIFIED ELSEWHERE

A. Section 17000 – Control and Information System Scope and General Requirements

B. Section 17100 – Digital System Hardware Configuration

C. Section 17120 – Programmable Logic Controllers

D. Section 17140 – Operator Workstations

E. Section 17180 – Local Area Network

1.03 TOOLS, SUPPLIES AND SPARE PARTS

A. Tools, supplies and spare parts shall be provided as specified in Section 17050 - Tools and Supplies. In addition, the following specific spare parts items shall be provided:

1. Field termination tool kit shall be provided containing all required tools and consumables for up to 30 connections, as well as a hand held optical light source and power meter for testing connections. Fiber optic connectors and installation kit shall be as manufactured by Corning Cable Systems, Black Box, or equal. An extra 25 feet of fiber optic cable shall be provided for training purposes.

PART 2 -- PRODUCTS

2.01 ETHERNET NETWORKS - GENERAL

A. The network topology shall be as shown on SCADA Network Diagram (Drawing I-02), consisting of a combination of twisted pair copper and multiple strand fiber optic cable to accomplish the data transmission requirements specified herein. Each connected device shall be equipped with its own network interface units.

B. Bi-directional communications between the network and network connected equipment shall be provided by network interface units. The network interface units shall be common to all equipment and shall include all required modems, communications processors and

memories to provide a transparent interface between the network(s) and the connected devices.

C. A multilayered peer-to-peer communications protocol shall be employed. Protocol shall be CSMA/CD ("Ethernet").

D. Power to all networking equipment shall be via uninterruptible power supply (UPS) systems specified in Section 17190.

2.02 ETHERNET NETWORK INTERFACE UNITS

A. Each device connected to the network shall be equipped with its own network interface unit. Bi-directional communications between the LAN and network-connected equipment shall be provided by the network interface units.

B. Network interface units, insofar as possible, shall be common to all equipment.

C. Each individual PLC shall be connected to the network via a dedicated port on its CPU module or a separate network interface module, and, where required, a fiber optic transceiver.

D. Network interface units shall include all required transceivers, media converters, communications processors, print servers, and memories to provide a transparent interface between the LAN and each individually connected device (operator workstations, peripherals, etc.).

E. Network interface units shall be as manufactured by Allen Bradley, Hirschman, Phoenix Contact, Cisco, Black Box, 3Com, Phoenix Digital, or equal.

2.03 FIBER OPTIC TRANSCEIVERS

A. Fiber optic transceivers shall be provided to transform the specific PLC data highway communications protocol or PLC remote I/O links into an optical signal suitable for transmission over the fiber optic cable specified herein. Fiber optic transceivers shall be modular, rack mounted, or mounted within the PLC rack.

B. Fiber optic transceivers shall support ring, bus, star, or point-to-point network topologies. On-line signal monitoring shall be provided to detect and locate impending faults. Fiber optic transceivers shall be replaceable on-line without disrupting the network. The fiber optic transceivers shall have self-healing communication recovery.

C. Optical communications modems shall meet the following minimum performance requirements:

1.	Input Power:	110/220 VAC or 24 VDC (as required) for stand-alone panel-mounted modules or +5 VDC for PLC rack-mounted modules
2.	Operating Temperature:	0° - 60°C

3.	Node-to-Node Distance:	10,000 feet
4.	Transmit Power:	-15 dbm
5.	Receive Sensitivity:	-32 dbm
6.	Wavelength:	850 or 1300 nanometers
7.	Connector Type:	SC, FC, or ST

D. The PLC manufacturer's standard, PLC rack-mounted fiber optic transceiver may also be used, subject to approval by the Engineer.

E. Acceptable fiber optic transceivers shall be as manufactured by Allen Bradley (Rockwell Automation), Hirschmann, Modicon, Siemens, N-Tron, Phoenix Digital, Inc., or engineer approved equal.

2.04 SHIELDED TWISTED PAIR (STP) PATCH CABLES

A. Twisted pair patch cabling for Ethernet connections shall be 4-pair, 24 AWG stranded Category 6 (CAT 6) shielded twisted pair (STP) cable with 100% foil shield, factory installed RJ-45 connectors, and strain relief boots. Cable shall be certified to be used with Ethernet/IP service, where applicable.

2.05 TWISTED PAIR CABINETS/PANELS

A. Patch panels for CAT 6 cabling shall be rack mount type 24 port to terminate all active and spare CAT 6 cabling. Jacks shall be HD CAT 6 to accept RJ-45 connectors. Black Box or equal. Each port shall be labeled.

B. Patch cables shall be CAT 6, stranded and color coded for each connected device. Patch cables shall be factory assembled with connector and PVC snag free boot. Black Box EVNSL6A, or equal.

2.06 UNSHIELDED TWISTED PAIR (UTP) NETWORK CABLE

A. Ethernet network cable for connections between indoor PLCs and computer systems shall be 4-pair, 24 AWG Category 6 (CAT 6) unshielded twisted pair (UTP) cable. Cable shall be certified to be used with Ethernet/IP service, where applicable.

2.07 FIBER OPTIC CABLE

A. Fiber optic cable shall conform to the following specifications:

1.	Fiber Type:	Graded Index (GI) Multimode
2.	Fiber/Cladding Diameter:	62.5/125 microns
3.	No. Fibers:	6, Color-coded
4.	Cable Construction:	Loose Tube w/ Ripcords
5.	Filling:	Water Swellable Dry Block
6.	Armored:	No
7.	Central Member:	Dielectric (Kevlar)

8.	Rating:	Gigabit Ethernet
9.	Bandwidth:	200/500 MHz-km at 850/1300 nm
10.	Maximum Attenuation:	3.5/1.0 dB/km at 850/1300 nm
11.	Application Type:	Direct-burial/Conduit/Aerial
12.	Sheath:	UV Resistant
13.	Max. Tensile Load:	600 lb (2700 N) installation; 200 lb (890 N) long term
14.	Minimum Bend Radius:	7 in (17.4 cm) under maximum tensile load; 4.6 in (11.6 cm) unloaded (installed)
15.	Operating Temperature:	-40 to 70 degrees C
16.	Operating Relative Humidity:	0-100%

B. Fiber optic cable shall be ALTOS All Dielectric, Gel Free, Loose Tube Optical Cable as manufactured by Corning Cable Systems, the Extended Performance Fiber Optic Cable Series as manufactured by Phoenix Digital, Inc., Belden equivalent, or equal.

C. Upon entering a cabinet, panel or console, loose tube fiber optic cable shall be broken out using fan-out kits and terminated in a fiber optic patch panel. Tight buffered cable shall then be routed to the individual destinations as needed (or loose tube cable for runs to other buildings). Cabinet-mounted patch panels shall be Cabinet-Mounted Interconnect Center (C-MIC) as manufactured by Corning Cable Systems, equivalent by Black Box, Inc., or equal.

D. Where cable is required to be routed to numerous, separate destinations within a building, loose tube cable shall be broken out immediately upon entering the building, terminated in a patch panel, and tight buffered, plenum rated cable shall be routed to the individual destinations. Building patch panels shall be Wall-Mountable Interconnect Center (WIC) or Premises Interconnect Center (PIC) as manufactured by Corning Cable Systems, equivalent by Black Box, Inc., or equal.

E. Fiber optic cable for installation within buildings shall comply with all applicable fire and building safety codes for such applications.

F. Fiber optic cable shall utilize mechanically spliced, field installable, SC, FC, or ST compatible connectors. Connections shall have a typical loss of 0.35 dB or better and shall provide stable optical performance after numerous rematings. Connections shall utilize physical contact terminations utilizing UV or heat cured adhesive. Field terminations shall use a simple procedure requiring minimal training.

PART 3 -- EXECUTION

3.01 REQUIREMENTS

A. Fiber optic cable and appurtenances shall be installed in strict accordance with the manufacturer's requirements.

B. Refer to Section 17000 for further information.

- END OF SECTION -

SECTION 17240 – SCADA SYSTEM SOFTWARE SUITE

PART 1 – GENERAL

1.01 THE REQUIREMENT

A. The CONTRACTOR shall design, furnish, test, install, and place in satisfactory operation all SCADA system software and ancillary software modifications and additions, complete, to integrate the PLC based control system modifications and additions as described and in accordance with the requirements of the Contract Documents. Services shall include but not be limited to all required configuration, programming, software testing, startup and ancillary services, and appurtenances as necessary for a complete and operating system in accordance with the requirements of the Contract Documents.

1.02 RELATED WORK SPECIFIED ELSEWHERE

A. Section 17000 – Control and Information System Scope and General Requirements

B. Section 17100 – Control and Information System Hardware, General

C. Section 17200 – Control and Information System Software Requirements

D. Section 17300 – Miscellaneous Modifications

PART 2 – PRODUCTS

2.01 GENERAL

A. The existing SCADA system software provides the process operator, process engineer, instrument engineer and maintenance personnel with access to process and system parameters required by each to perform their required tasks. The SCADA system software is designed as a Microsoft Windows® product and provides an intuitive, object-oriented, client-server and/or browser based graphical interfaces to the process and associated functionality as described herein below.

B. Key features of the existing SCADA system includes, but is not limited to: real time and historical visualization and reporting of process measurements, status, control settings, and alert/alarms; multimedia alert/alarm management and annunciation to external systems; user login security management; redundancy management and auto-failover to hot standby systems; communications among servers, workstations, laptop computers, integrated display computers, programmable logic controllers, and other devices as shown on the Drawings or described herein.

C. The descriptions provided herein are intended as supplemental information for the CONTRACTOR and the Instrumentation Contractor to provide a general understanding of the existing SCADA system hardware and software configuration within which the required certain modifications, configuration changes and additions will be required in order to integrate the PLC based control system modifications and additions described in the Contract Documents.

D. However, the descriptions provided herein do not relieve the CONTRACTOR and the Instrumentation Contractor from fully investigating and understanding all hardware, software and configuration specifics of the existing SCADA system hardware and software system to successfully perform the work as required and described in the Contract Documents.

2.02 SCADA SYSTEM SOFTWARE - GENERAL

A. As of July,1st 2016 the current City of Hallandale Beach WTP SCADA System software suite is iFix HMI/SCADA version 5.5 by General Electric and, along with any ancillary software products, shall be the basis of design, consistent with the existing SCADA system application software product family features and performance requirements for this project.

B. The Instrumentation Contractor shall be responsible for assessing the existing SCADA software suite product (including the make, revision and number of available tags) and shall be prepared to provide the same features and performance requirements for this project at no additional cost to the OWNER, should the OWNER's existing SCADA system software be something other than iFix HMI/SCADA version 5.5 by General Electric.

C. The CONTRACTOR and Instrumentation Subcontractor shall review and confirm the final arrangement of software product components, physical application servers, and the all system and programming configuration files prior to the commencement of the work.

PART 3 -- EXECUTION

3.01 HMI GRAPHIC DISPLAYS - GENERAL

A. Multiple HMI graphic display pages shall be able to be viewed on the screen simultaneously. All graphic displays shall be scalable to allow automatic scaling of the display so as to maintain a full view of the graphics regardless of the window size, screen resolution settings and type(s) of graphics access device(s). Graphical displays shall have no hard coded limitations for display size. Workstations equipped with multiple display monitors shall be configured to support multiple independent HMI graphic display sessions within the same HMI graphics display client software instance.

B. The graphic display system described in the following paragraphs only defines those types of project specific displays commonly used during normal operations and their overall organization and navigation. Displays and display navigation shall be based upon the display hierarchy described herein and written control narratives contained in Sections entitled "Functional Control Descriptions" of the Specifications.

C. The CONTRACTOR and Instrumentation Subcontractor shall review all existing process graphic displays installed on the existing WTP SCADA system to provide the general basis and guidance for the CONTRACTOR's design and implementation of project specific HMI graphic display system performance requirements specified herein.

D. The CONTRACTOR shall include all labor and expenses for the development, testing and implementation of an additional three (3) HMI graphic displays (and/or templates) and, and up to three (3) additional report pages, of any type upon request by the City

subsequent to completion of the Factory Acceptance Test (FAT) but prior to final project completion.

3.02 MULTIMEDIA ALERT/ALARM CONFIGURATION

A. The alert/alarm system shall be configured to provide alert/alarm handling, reporting and archiving of all process data related to the processes and equipment provided and/or modified under this Contract as described herein.

3.03 TRENDS CONFIGURATION

A. The trending system shall accommodate all work performed under this Contract. Real-time and historical trends shall be developed with close coordination with the OWNER.

B. All attributes of each historical display chart shall be able to be configured or modified at any time.

3.04 HISTORIAN SERVER DATA MANAGEMENT CONFIGURATION

A. The process historian servers together with the real time data loggers shall be configured to provide real time and historical data gathering, trending, and evaluation for system and operations validating, testing, maintenance and regulatory reporting.

3.05 SYSTEM SECURITY

A. The WTP's existing SCADA HMI access control standards shall be applied to the new and modified SCADA HMI screens to limit user access based on assigned levels of privilege. SCADA HMI security conventions shall be closely coordination with the OWNER.

- END OF SECTION -

SECTION 17300 – MISCELLANEOUS MODIFICATIONS

PART 1 -- GENERAL

1.01 THE REQUIREMENT

A. The CONTRACTOR shall furnish, test, install and place in satisfactory operation the miscellaneous modifications described herein together with all programming work, spare parts, accessories, and appurtenances as specified herein or required for a complete and operating system.

B. All hardware, software, programming, testing and startup services together with all necessary accessories such as power supplies, conditioning equipment, mounting hardware, signal input and output terminal blocks, and plug strips which may be required to complete the work shall be provided.

1.02 RELATED WORK SPECIFIED ELSEWHERE

A. Section 17000 - Control and Information System Scope and General Requirements

B. Section 17200 – Control and Information System Software Requirements

C. Section 17240 – SCADA System Software Suite

D. Section 17560 - Transient Voltage Surge Suppression Devices

E. Section 17920 – Control System Input / Output Schedule

G. Refer to Division 16 for additional requirements for cable, circuit breakers, disconnect switches, etc.

1.03 GENERAL INFORMATION AND DESCRIPTION

A. These Specifications are intended to give a general description of what is required, but do not cover all details which will vary in accordance with the requirements of the equipment furnished. They are, however, intended to cover the furnishing, shop testing, delivery and complete installation and field testing, of all materials, equipment and appurtenances for complete systems herein specified, whether specifically mentioned in the Specification or not.

B. For all units there shall be furnished and installed all necessary and desirable accessory equipment and auxiliaries whether specifically mentioned in these Specifications or not. This installation shall incorporate the highest standards for the type of service shown on the Drawings including field testing of the entire installation and instruction of operating personnel in the care, operation, and maintenance of all equipment.

C. All equipment shall be of first class work quality and shall be entirely designed and suitable for the intended services. All materials used in fabricating the equipment shall be new and undamaged.

D. All equipment of each type, i.e., all controllers, all indicators, all relays, all surge protectors, all signal converters, etc., provided under this Contract shall be furnished by a single manufacturer.

E. Due consideration shall be given to installation requirements for enclosures in new and existing structures. The CONTRACTOR shall examine plans and/or field inspect new and existing structures as required to determine installation requirements, and shall coordinate the installation of all enclosures with the CITY and all affected CONTRACTORs. The CONTRACTOR shall be responsible for all costs associated with installation of enclosures, including repair of damage to structures (incidental, accidental or unavoidable).

1.04 TOOLS, SUPPLIES AND SPARE PARTS

A. Tools, supplies and spare parts shall be provided as specified in Section entitled "Tools, Supplies and Spare Parts - General." In addition, the spare parts items shall be provided as specified in the individual cabinet and panel specification section entitled, "Cabinets and Panels."

PART 2 -- PRODUCTS

2.01 SCADA HMI MODIFICATIONS

A. An existing Supervisory Control and Data Acquisition (SCADA) system Human-Machine Interface (HMI) system currently serves the Hallandale Beach WTP and provides monitoring and control of various plant processes from the control room. The existing system shall be expanded to serve the following systems:

1. High Service Pump Station.

B. Any additional HMI system software or licenses required shall be provided at no additional cost to the CITY. The CONTRACTOR shall field verify the existing HMI systems and software licenses to determine any license upgrades that may be required.

C. Expansion of the HMI system poll tables, databases and operator interface displays necessary for monitoring and control shall be provided by the CONTRACTOR and are to be included in the services provided by the Instrumentation Subcontractor. The CONTRACTOR shall coordinate with the CITY to obtain access to the existing SCADA workstations when needed and to schedule modifications and testing so as to minimize down time of the SCADA system. The two existing SCADA workstations are configured as a redundant pair. One SCADA workstation shall always be fully functional to allow plant staff to continuously monitor and control the WTP.

D. The HMI applications programming provided by the CONTRACTOR shall be similar to the existing applications programming in the following ways:

1. Database tags and communications driver tags shall use similar tagging and description schemes.

2. Graphic displays shall use the same screen resolution, background color, navigation buttons, time and date display.

3. Graphic displays shall use the same standards for object colors, text styles, object shapes (e.g., pipes, tanks, pumps, instruments, valves), dynamic properties (value animations, object scaling or movement, object or text blinking, object visibility, alarm display).

4. Pop-up display styles and user input technique.

5. Historical trends shall use the same style and controls.

6. Security implementation shall match similar pump controls (e.g., user login shall restrict access to graphics displays, or shall limit the rights to modify control setpoints).

E. The CONTRACTOR shall make the following SCADA HMI graphic display modifications in accordance with the Functional Control Descriptions in Section 17950:

1. High Service Pump Station:

a. Overview – Modifications to existing SCADA HMI screens shall be made to incorporate the High Service Pump Station equipment, piping and instrumentation upgrades, as described in Section 17950, shown on Instrumentation Drawings and listed in the I/O list. Show key control strategy data and links to more detailed screens and control strategy settings. Provide links to pop-up control screens for the High Service Pumps and valve actuators.

b. Historical Trends – Log all analog values and alarms to the existing historical database. Provide predefined historical trend charts for all collected data. Provide links to the new trend charts from the existing trend menus.

2.02 PLC-2 HARDWARE AND SOFTWARE MODIFICATIONS

A. Provide additional Control Logix discrete input modules, terminal blocks, fuses, DIN rail, wiring and all materials and equipment required to add the breaker status signals shown on I-04, and listed in Section 17920, to existing PLC-2. Modify the PLC logic as required for the breaker status signals to be displayed on the SCADA HMI and logged in the SCADA historian.

PART 3 -- EXECUTION

3.01 INSTALLATION

A. Refer to Section entitled “Control and Information System, General” for additional requirements.

- END OF SECTION -

SECTION 17500 - ENCLOSURES, GENERAL

PART 1 -- GENERAL

1.01 THE REQUIREMENT

A. The Contractor shall furnish, test, install and place in satisfactory operation the control enclosures, with all spare parts, accessories, and appurtenances as specified herein and as shown on the Drawings.

B. Control enclosures shall be assembled, wired, and tested in the instrumentation subcontractor's own facilities, unless specified otherwise. All components and all necessary accessories such as power supplies, conditioning equipment, mounting hardware, signal input and output terminal blocks, and plug strips that may be required to complete the system shall be provided.

1.02 RELATED WORK SPECIFIED ELSEWHERE

A. Section 17000 – Control and Information System Scope and General Requirements

B. Section 17100 – Control and Information System Hardware, General

C. Section 17510 – Cabinets and Panels

D. Section 17520 – Field Panels

E. Section 17550 – Panel Instruments and Accessories

F. Section 17560 – Transient Voltage Surge Suppression Devices

G. Section 17600 – Unpowered Instruments, General

H. Section 17700 – Powered Instruments, General

I. Section 17800 – Analytical Instruments, General

J. Section 17900 – Schedules and Control Descriptions, General

K. Refer to Division 16 for additional requirements for cable, circuit breakers, disconnect switches, etc.

1.03 GENERAL INFORMATION AND DESCRIPTION

A. The cabinet itself and all interior and exterior equipment shall be identified with nameplates. The equipment shall be mounted such that service can occur without removal of other equipment. Face mounted equipment shall be flush or semi-flush mounted with flat black escutcheons. All equipment shall be accessible such that adjustments can be made while the equipment is in service and operating. All enclosures shall fit within the allocated space as shown on the Drawings.

B. Either manufacturer-standard or custom cabinetry may be furnished subject to the requirements of the Contract Documents and favorable review by the Owner.

C. Due consideration shall be given to installation requirements for enclosures in new and existing structures. The Contractor shall examine plans and/or field inspect new and existing structures as required to determine installation requirements, and shall coordinate the installation of all enclosures with the Owner and all affected contractors. The Contractor shall be responsible for all costs associated with installation of enclosures, including repair of damage to structures (incidental, accidental or unavoidable).

1.04 TOOLS, SUPPLIES AND SPARE PARTS

A. Tools, supplies and spare parts shall be provided as specified in Section 17050 - Tools, Supplies and Spare Parts. In addition, the spare parts items shall be provided as specified in the individual cabinet and panel specification sections (175XX).

PART 2 -- PRODUCTS

2.01 TERMINAL BLOCKS

A. Terminal blocks shall be assembled on non-current carrying galvanized steel DIN mounting rails securely bolted to the cabinet subpanel. Terminals shall be of the screw down pressure plate type as manufactured by Phoenix Contact, Wieland, Square D, or equal.

B. Power terminal blocks shall be single tier with a minimum rating of 600 volts, 30 amps.

C. Signal terminal blocks shall be single tier with a minimum rating of 600 volts, 20 amps.

PART 3 -- EXECUTION

3.01 FABRICATION

A. Enclosures shall provide mounting for power supplies, control equipment, input/output subsystems, panel mounted equipment and appurtenances. Ample space shall be provided between equipment to facilitate servicing and cooling.

B. Enclosures shall be sized to adequately dissipate heat generated by equipment mounted inside the panel. If required, one or more of the following shall be provided to facilitate cooling:

1. Louvered openings near the bottom and top (NEMA 12 cabinets only).

2. Thermostatically controlled, low noise internal air blowers (initial setpoint 75°F) to circulate air within the enclosure, maintaining a uniform internal temperature.

3. Thermostatically controlled, low-noise cooling fans to circulate outside air into the enclosure, exhausting through louvers near the top of the cabinet (NEMA 12 cabinets only). Air velocities through the enclosure shall be minimized to assure quiet operation.

4. All openings in cabinets and panels shall be fitted with dust filters.

C. Enclosures shall be constructed so that no screws or bolt heads are visible when viewed from the front. Punch cutouts for instruments and other devices shall be cut, punched, or drilled and smoothly finished with rounded edges.

D. The temperature inside each enclosure containing digital hardware (i.e., cabinet, panel or console) shall be continuously monitored and shall generate an alarm to the nearest PLC if the temperature rises to an adjustable, preset high temperature.

E. Terminals shall be marked with a permanent, continuous marking strip. One side of each terminal shall be reserved exclusively for field incoming conductors. Common connections and jumpers required for internal wiring shall not be made on the field side of the terminal. Subject to the approval of the Engineer, a vendor's pre-engineered and prefabricated wiring termination system will be acceptable.

F. Wiring shall comply with accepted standard instrumentation and electrical practices. Power, control and signal wiring shall comply with Division 16 of the specifications. For each pair of parallel terminal blocks, the field wiring shall be between the blocks.

G. Separate terminal strips shall be provided for each type of power and signal used within each cabinet.

H. All wiring shall be bundled and run open or enclosed in vented plastic wireway as required. Wireways shall be oversized by a minimum of 10%; overfilled wireways shall not be acceptable. All conductors run open shall be bundled and bound at regular intervals, not exceeding 12 inches, with nylon cable ties. Care shall be taken to separate electronic signal, discrete signal, and power wiring.

I. A copper 120 VAC ground bus shall be installed in each cabinet, and shall be connected to the building power ground. A separate, isolated copper ground bus shall be installed in each cabinet for the logic (24 VDC) ground. Both ground buses shall be clearly labeled as to voltage and function.

J. Interior panel wiring and field wiring shall be tagged at all terminations with machine-printed plastic sleeves. The wire numbering system and identification tags shall be as specified in Section 16123 - Building Wire and Cable. Where applicable, the wire number shall be the ID number listed in the input/output schedules.

K. Wires shall be color coded as follows:

Equipment Ground - GREEN

120 VAC Power - BLACK
120 VAC Power Neutral - WHITE

120 VAC Control (Internally Powered) - RED
120 VAC Control (Externally Powered) - YELLOW

24 VAC Control - ORANGE

DC Power (+) - RED
DC Power (-) - BLACK
DC Control - BLUE

Analog Signal – BLACK/WHITE or BLACK/RED

L. Enclosures shall be provided with a main circuit breaker and a circuit breaker on each individual branch circuit distributed from the panel. Main breaker and branch breaker sizes shall be coordinated such that an overload in a branch circuit will trip only the branch breaker but not the main breaker.

M. Enclosures with any dimension larger than 36 inches shall be provided with 120-volt duplex receptacles for service equipment and LED service lights. Power to these devices shall be independent from the PLC power supply and its associated uninterruptible power system.

N. Where applicable, enclosures shall be furnished with red laminated plastic warning signs in each section. The sign shall be inscribed "WARNING - This Device Is Connected to Multiple Sources of Power". Letters in the word "WARNING" shall be 0.75 inch high, white.

O. The interconnection between equipment and panel shall be by means of flexible cables provided to permit withdrawal of the equipment from the cabinet without disconnecting the plugs.

3.02 PAINTING

A. All steel enclosures shall be free from dirt, grease, and burrs and shall be treated with a phosphatizing metal conditioner before painting. All surfaces shall be filled, sanded, and finish coated by spraying a 1-2 mil epoxy prime coat and smooth, level, high grade textured finish between flat and semi-gloss shine. The colors shall be selected by the Owner from a minimum of six color samples provided. Refer to Division 9 for additional requirements.

B. Materials and techniques shall be of types specifically designed to produce a finish of superior quality with respect to adherence, as well as impact and corrosion resistance.

C. Panels fabricated from stainless steel shall not be painted.

3.03 INSTALLATION

A. Refer to Section 17000 for additional requirements.

- END OF SECTION -

SECTION 17510 - CABINETS AND PANELS

PART 1 -- GENERAL

1.01 THE REQUIREMENT

A. The Contractor shall furnish, test, install and place in satisfactory operation the cabinets and panels, with all spare parts, accessories, and appurtenances as specified herein and as shown on the Drawings.

1.02 RELATED WORK SPECIFIED ELSEWHERE

A. Section 17000 – Control and Information System Scope and General Requirements

B. Section 17100 – Control and Information System Hardware, General

C. Section 17500 – Enclosures, General

D. Section 17900 – Schedules and Control Descriptions, General

PART 2 -- PRODUCTS

2.01 CABINETS AND PANELS

A. Cabinets and panels shall be formed or welded construction, reinforced with Unistrut, Powerstrut, or equal to facilitate mounting of internal components or equipment. Sufficient access plates and doors shall be provided to facilitate maintenance and testing of the cabinet's equipment. Doors shall be removable. Cabinets and panels with any dimension 36 inches or greater shall be provided with removable lifting lugs designed to facilitate safe moving and lifting of the panel during installation. All doors shall be fitted with common-keyed locks.

B. Cabinets and panels shall be minimum 14 USS gauge. Cabinets and panels with any dimension greater than 36 inches shall be 12 USS gauge.

C. Cabinets and panels located inside buildings, but located in areas other than climate controlled (heated and air conditioned) electrical or control rooms, shall be as a minimum 316 stainless steel NEMA 4X construction, or as specified or shown on the Drawings for hazardous area classification (Class, Division, Group), or submersible (NEMA 6) applications. Epoxy coated cast copper-free aluminum construction shall also be acceptable for NEMA 4, 6 and 7 applications. Cabinets located in chlorine storage/feed areas shall be of non-metallic, FRP construction, rated NEMA 4X.

D. Cabinets and panels within climate controlled (heated and air-conditioned) electrical or control rooms shall be all steel fully enclosed NEMA 12 units with gasketed doors.

080805BR

E. Cabinets and panels shall have doors on the front and shall be designed for front access. NEMA 12 cabinets shall be fitted with three-point door latches. Door latches for NEMA 4X cabinets shall be all stainless steel, fast operating clamp assemblies that do not require bolts or screws to secure. Door hardware on NEMA 4X cabinets located in chlorine storage/feed areas shall be non-corrosive in that environment.

F. Panels and cabinets located outside fence-secured areas shall be fitted with padlockable latch kits.

G. All cabinets and panels shall be provided with drawing pockets for as-built panel drawings. One copy of the appropriate panel as-built drawings shall be furnished and left in the pocket of each panel.

H. Panels with any dimension greater than 36 inches that contain a programmable controller (PLC or DCU) shall be provided with a folding laptop programmer shelf on the inside of the door.

I. Cabinets and panels shall be prefabricated cabinets and panels by Hoffman or Rittal. The Contractor may optionally provide cabinets that are custom-fabricated by the instrumentation subcontractor or by a reputable panel fabrication shop acceptable to the Engineer.

PART 3 -- EXECUTION

3.01 REQUIREMENTS

A. Refer to Section 17500 for additional requirements.

- END OF SECTION -

SECTION 17550 - PANEL INSTRUMENTS AND ACCESSORIES

PART 1 -- GENERAL

1.01 THE REQUIREMENT

A. The Contractor shall furnish, test, install and place in satisfactory operation the panel instruments and accessories, with all spare parts, accessories, and appurtenances as specified herein and as shown on the Drawings.

1.02 RELATED WORK SPECIFIED ELSEWHERE

A. Section 17000 – Control and Information System Scope and General Requirements

B. Section 17100 – Control and Information System Hardware, General

C. Section 17500 – Enclosures, General

D. Section 17900 – Schedules and Control Descriptions

1.03 GENERAL INFORMATION AND DESCRIPTION

A. All equipment mounted on the face of a panel shall conform to the same NEMA rating specified for the panel construction.

1.04 TOOLS, SUPPLIES AND SPARE PARTS

A. Tools, supplies and spare parts shall be provided as specified in Section 17050 - Tools, Supplies and Spare Parts. In addition, the following specific spare parts items shall be provided:

1. One of each type of panel mounted equipment (i.e., indicators, signal converters, etc.) provided under this Contract.

2. Five of each type of interposing relay provided under this Contract.

PART 2 -- PRODUCTS

2.01 ELECTRONIC INDICATORS

A. Electronic indicators shall be 3.5 or 6 digit, as appropriate, with 0.56" high red LED display. Indicators shall be provided with nameplate and scale calibrated to match the calibration of the primary element. The unit shall be designed primarily for use with 4-20 mA current loop signal circuits. Indicator operating voltage shall be 115 VAC 10%, 60 Hz. Indicator controls shall include three (3) front-panel pushbuttons for modifying alarm values and other indicator setup. Where required, a regulated and isolated 24 Vdc power supply shall

020705BR

be provided. Indicators shall be Red Lion Model PAX with PAX CDL Analog Output Card, or engineer approved equal.

2.02 SIGNAL CONVERTERS

A. Signal converters shall be provided as required to provide control functions and to interface instrumentation and controls, equipment panels, motor control centers and other instrumentation and controls supplied under other Divisions to the controls provided herein.

B. General Requirements – Converters shall be of the miniature type, utilizing all solid state circuitry suitable for mounting within new or existing cabinetry. Where sufficient cabinet space is not available, sub panels or supplemental enclosures shall be provided. Power supply shall be 120V, 60 hertz where required by the converter. Repeatability shall be 0.1% of span, deadband shall be 0.1% span, maximum. Where specific converters are not listed, but are required to interface with the process control system, they shall comply with the general requirements stated herein.

C. Current to Current Isolators – Current to current isolators shall be furnished where necessary to provide an isolated current loop, calculations or signal amplification between the plant process control system and instrumentation and control loops. Isolators shall be sized such that resistance of existing loops shall not exceed maximum rated resistance. Isolators shall be as manufactured by AGM, Moore Industries, Rochester Instrument Systems (RIS), or equal.

D. Voltage to Current Transducers – Voltage to current (or current to voltage) transducers shall convert a voltage signal of one magnitude to a 4-20 milliamp DC current signal. The output current shall be directly proportional to the input signal voltage. Transducers shall be sized such that loop resistance does not exceed maximum rated resistance. Transducers shall be as manufactured by AGM, Moore Industries, Rochester Instrument Systems (RIS), or equal.

E. Frequency to Current Transducers – Frequency to current transducers shall convert pulse-rate and pulse-duration signals to 4-20 mA, 24 VDC analog signals. Converters shall include field-adjustable input frequency range. Converter power shall be 120 VAC, 60 hertz. Transducers shall be sized such that loop resistance does not exceed maximum rated resistance. Transducers shall be suitable for signal transmission via leased telephone lines. Transducers shall be Timeverter as manufactured by AGM, Moore Industries equivalent, Rochester Instrument Systems (RIS) equivalent, or equal.

F. Current to Frequency Transducers – Current to frequency transducers shall convert 4-20 mA, 24 VDC analog signals to pulse-rate and pulse-duration signals. Converters shall include field-adjustable output frequency range. Converter power shall be 120 VAC, 60 hertz. Transducers shall be sized such that loop resistance does not exceed maximum rated resistance. Transducers shall be suitable for signal transmission via leased telephone lines. Transducers shall be Quantimer as manufactured by AGM, Moore Industries equivalent, Rochester Instrument Systems (RIS) equivalent, or equal.

G. Integrators – Integrators shall be provided as interchangeable plug-in modules with zero and span adjustment available on the front plate of the units. Output shall range from 0 to 0.1 through 0 to 10 pulses per second. Accuracy shall be ± 0.1% of input span. Integrators shall convert linear analog signals to pulse rate and provide a solid-state output. Integrators shall be as manufactured by AGM Electronics, Moore Industries, Rochester Instrument Systems (RIS), or equal.

H. Electronic Switches (Alarm Relays) – Electronic switches shall be furnished with a calibrated dial for adjusting set points. The input to the switch shall be 4-20 mADC, and the set point shall be adjustable over the full range. Unless otherwise noted, the dead band shall be fixed at less than 2 percent of span. The set point stability shall be ±0.1% per degree F. The repeatability shall be ±0.1% of span. The units shall be furnished with SPDT relays rated at 10 amperes at 115 VAC. Electronic switches shall be as manufactured by AGM, Moore Industries, Rochester Instrument Systems (RIS), or equal.

I. RTD to Current Signal Converters – RTD to current signal converters shall convert a 3-wire RTD input signal to an isolated 4-20 mADC output signal. Each converter shall operate from a 120 VAC power source. Accuracy shall be 0.10 percent of span or better. Calibrated span of each converter shall be as indicated on the instrument list. The Contractor shall coordinate calibration of the signal converters with existing RTD elements. The signal converters shall be furnished in the manufacturer's standard enclosure for installation in an existing indoor electrical cabinet. Signal converters shall be as manufactured by AGM, Moore Industries, Rochester Instrument Systems (RIS), or equal.

J. Interposing Relays – Where required to interface between motor control centers, equipment controls, and control panels, interposing relays and associated control wiring circuitry shall be furnished and installed to provide the monitoring and/or control functions specified herein. Interposing relays shall be miniature type, DPDT, minimum 10 amp, 120 VAC contact rating. Relay coils shall be 120 VAC or 24 VDC as required. Relays shall be Type KU as manufactured by Square D, Potter & Brumfield, Allen-Bradley, or equal.

K. Timing Relays – Timing Relays (TR) shall be the general purpose plug-in type, Type JCK as manufactured by Square D Company, Cutler-Hammer/Westinghouse Electric Corporation equivalent, Allen-Bradley equivalent, or equal. Timing relays shall be electronic type with 120 VAC coils unless otherwise specified or indicated on the Drawings. Timers shall be provided with a minimum of two SPDT timed output contacts and instantaneous contacts where required. Contact ratings shall be the same as for interposing relays as specified above.

L. Intrinsically Safe Relays and Barriers – Intrinsically safe relays and barriers shall be provided where required to interface with equipment such as float level switches that are located in NFPA-classified hazardous areas. Intrinsically safe relays and barriers shall be FM approved and shall be manufactured by Pepperl and Fuchs, Crouse Hinds, Square D, or equal.

2.03 ACCESSORIES

A. Control operators such as pushbuttons (PB), selector switches (SS), and pilot lights (PL) shall be Cutler-Hammer/Westinghouse Type E34, Square D Company Type SK, or equal. Control operators shall be 30.5 mm, round, heavy-duty, oil tight NEMA 4X corrosion resistant.

B. Pushbuttons shall be non-illuminated, spring release type. Pushbuttons shall include a full guard. Panic stop/alarm pushbuttons shall be red mushroom type with manual-pull release. Selector switches shall be non-illuminated, maintained contact type. Pilot lights shall be of the proper control voltage, LED type with light lens colors shall be as specified below.

Color	Function
Red	Running (Open)
Green	Stopped or Off (Closed)
Amber	Fault
White	Other

C. Control operators shall have legend plates as specified herein, indicated on the Drawings, or otherwise directed by the Engineer. Legend plates shall be plastic, black field (background) with white lettering. Engraved nameplates shall be securely fastened above each control operator. If adequate space is not available, the nameplate shall be mounted below the operator.

D. Control operators for all equipment shall be as specified herein and of the same type and manufacturer unless otherwise specified or indicated on the Drawings.

E. Alarm horns shall be general-purpose type, flush panel mount, 115 VAC power supply or 24 VDC power supply, suitable for indoor or weatherproof service, as required. Volume shall be adjustable.

2.04 ANNUNCIATOR SYSTEMS

A. The annunciator systems shall be installed as specified herein and as shown on the Drawings. Annunciator systems shall be of the all-silicon, solid state type furnished with a separately mounted alarm horn, logic circuitry, a DPDT auxiliary output relay, translucent windows and white lamps. Acknowledge and test switches shall be of the heavy-duty oil-tight type.

B. The system shall include filter networks on the power supply and each input point. Each point shall be provided with a two-position switch to allow the annunciator to operate with either normally open or normally closed field contact. Maximum field contact interrogation voltage shall be 24 VDC. Each point shall be equipped with a DPDT repeater relay.

C. The auxiliary output relay shall normally be energized whenever the horn is sounded. When the test circuit is energized, all components except the auxiliary relay shall be energized.

D. The lamps shall be operated at reduced voltage and shall be rated for 50,000 hours. The lamps shall be easily replaceable as an off-the-shelf item from at least two manufacturers.

E. The system shall be capable of operation in an ambient temperature of 0 to 150 degrees F, with a line voltage variation of ± 10 percent.

F. The system shall be capable of operating with a lock-in alarm sequence, as indicated on the following table:

	Field Contact Normal	**Field Contact Abnormal**	**Return to Normal Before Acknowledge**	**Alarm Acknowledge**	**Return to Normal**
Lamp:	OFF	FLASHING	ON	ON	OFF
Horn:	OFF	ON	OFF	OFF	OFF

G. The system shall be as manufactured by Ronan Engineering Company, or Panalarm Division of Ametek, Inc., or equal.

H. Each system shall be furnished with at least 10% but not less than two spare (active) points, with a minimum of 10% but not less than six (boxed) spare lamps.

PART 3 -- EXECUTION

3.01 REQUIREMENTS

A. Refer to Section 17500 for additional requirements.

- END OF SECTION -

SECTION 17560 – TRANSIENT VOLTAGE SURGE SUPPRESSION DEVICES

PART 1 – GENERAL

1.01 THE REQUIREMENT

A. The CONTRACTOR shall furnish, install and place in satisfactory operation the transient voltage surge suppression (TVSS) devices as specified herein and as shown on the Drawings.

1.02 RELATED WORK SPECIFIED ELSEWHERE

A. Section 17000 - Control and Information System Scope and General Requirements

B. Section 17060 – Signal Conditioning Requirements

C. Section 17120 – Programmable Logic Controllers

D. Section 17500 – Enclosures, General

E. Section 17550 – Panel Instruments and Accessories

1.03 GENERAL INFORMATION AND DESCRIPTION

A. All surge protectors of each type provided under this Contract shall be furnished by a single manufacturer.

1.04 TOOLS, SUPPLIES AND SPARE PARTS

A. The following specific spare parts items shall be provided:

1. Five of each type of transient voltage surge suppression (TVSS) devices provided under this Contract.

PART 2 – PRODUCTS

2.01 ELECTRICAL TRANSIENT PROTECTION, GENERAL

A. All electrical and electronic elements shall be protected against damage due to electrical transients induced in interconnecting lines from lightning discharges and nearby electrical systems.

B. Manufacturer's Requirements: All transient voltage surge suppressor devices shall be multi stage serial devices manufactured by a company that has been engaged in the design, development, and manufacture of such devices for at least 5 years. Acceptable manufacturers shall be Phoenix Contact or Engineer approved equal. Transient voltage surge suppressor device design requirements shall include the following:

1. Transient voltage surge suppression devices shall be two part, DIN rail mounted, high density, plug-and-base modular terminal block format. The two part plug and base format shall facilitate arrestor module replacement without rewiring.

2. Surge suppression devices shall provide a combination of wire to ground and wire to wire protection.

3. Suppression devices shall be grounded via the grounded DIN rail.

4. Surge suppression devices shall be modular, single channel devices and shall utilize a combination of gas discharge tubes, varistors and suppression diodes in a multistage configuration to protect nominal voltage ranges between 5 VDC and 230 VAC.

5. Each surge suppression module shall provide local LED indication of arrestor status as well as dry contact output for remote indication of arrestor status the associated PLC to alert when arrestor replacement is required.

6. For surge suppression modules within control panels, for each group of up to twenty eight (28) surge suppression modules, provide a DIN rail mounted surge suppressor monitor/control module (or functional equivalent) to indicate and provide common group alert dry contact outputs to the local PLC I/O system for predictive fault monitoring. Individual status outputs shall be provided for device warning and device overload conditions. Each surge suppressor monitor/control module shall also provide the distribution of power for the LED status indication lights on each group of up to twenty eight (28) surge suppression modules serving the control panel field I/O wiring terminal block system.

7. Configure SCADA system for remote status monitoring for each installed surge suppression monitor/control module device. Provide all required additional PLC I/O as necessary to provide the specified surge suppression module group status monitoring functionality.

8. DIN rail mounted bases shall be modular type, screw or push-in wiring terminal type, with individually labeled terminals. Bases shall serve as the field terminal blocks between all panel-mounted devices and internal wiring and all field power, communications, I/O signal and ancillary wiring external to the panel.

C. Surge protection device installations shall comply with UL 94, the National Electric Code (NEC), and all applicable local codes.

D. Surge protection devices shall be installed as close to the equipment to be protected as practically possible.

E. Suppressor Locations: As a minimum, provide surge suppressors at the following locations:

1. At all connections between AC power, DC power and associated electrical and electronic equipment, including panels, cabinets, and rack assemblies, as well as at field mounted powered instruments (where new field instrumentation devices are specified to be furnished and installed).

2. Where new field instrumentation is specified to be furnished and installed, provide protection at both ends of all two-wire analog signal circuits and all four wire analog power/ signal circuits.

3. Where existing field instrumentation is to be reconnected to modified and new local control panels, provide protection at the panel end of all two-wire analog signal circuits and all four wire analog power/ signal circuits.

4. At the panel end of all analog inputs and outputs and all discrete input (dry contact) circuits and discrete output (24 VDC or relay contact) circuits that extend to all devices outside of the PLC enclosure. Control panel field wiring terminal blocks for all discrete and analog inputs and outputs shall be DIN rail mounted, modular type with integral transient voltage surge suppression and other signal isolation and protective devices, as required. Terminal block wiring connections shall be screw or push-in type and shall accept 24-14 AWG wire; rated for the signals carried and labeled as manufactured by Phoenix Contact, or equal.

5. At each device termination point of copper-based communication cables (serial, parallel, Ethernet, Device Net, etc.).

6. On all telephone communications lines.

7. RF antenna cable radio terminus.

F. Surge suppressors shall be as follows:

1. 120-Volt power surge suppressor: The protector shall be PLUGTRAB series by Phoenix Contact, or Engineer approved equivalent.

2. 120-Volt powered, field mounted analog transmitter: The protector shall combine AC power protection and 4-20 mA signal line protection. The suppressor shall be SLAC series by EDCO or Engineer approved equivalent.

3. Two-wire field-mounted analog transmitter: 4-20 mA signal line protection shall be stainless steel pipe-type and shall be Phoenix Contact SURGETRAB S-PT1-24DC , or Engineer approved equivalent.

4. 4-20 mA analog input/output signal line protection at the panel side: The protector shall be PLUGTRAB IQ series by Phoenix Contact, or Engineer approved equivalent.

5. Two-wire discrete input/output signal line protection at the panel side: The protector shall be PLUGTRAB IQ series by Phoenix Contact, or Engineer approved equivalent.

6. Surge suppressors for copper-based data communication circuits: Shall be designed for the specific data communication media and protocol to be protected (e.g., telephone, serial, parallel, Ethernet, DeviceNet, coax, twinaxial, twisted pair, RF, etc.), and shall provide protection of equipment to within the equipment's surge withstand levels for applicable standard test wave forms of the following standards:

   a. IEC 60-1 / DIN VDE 0432 part 2

   b. CCITT K17 / DIN VDE 0845 part 2

   c. IEEE C62.31

Shall be PLUGTRAB IQ, PLUGTRAB, or DATATRAB by Phoenix Contact, or Engineer approved equivalent.

PART 3 – EXECUTION

3.01 REQUIREMENTS

A. Install in accordance with manufacture recommended practices and applicable codes.

B. Refer to Section entitled “Enclosures, General” for additional requirements.

- - END OF SECTION - -

SECTION 17600 - UNPOWERED INSTRUMENTS, GENERAL

PART 1 -- GENERAL

1.01 THE REQUIREMENT

A. The instrumentation subcontractor shall furnish, install, test and place in operation process instrumentation (flow elements, pressure switches, etc.) as scheduled herein together with all signal converters, transmitters, isolators, amplifiers, etc. to interface all instrumentation, panels, controls and process equipment control panels with the process controls as shown on the Drawings and as specified. The Contractor may elect to install primary elements (flowmeters, etc.) on process lines provided that the instrumentation subcontractor provides full on-site supervision during installation. Mounting of associated transmitters, indicators, power supplies, brackets and appurtenances shall be provided as specified herein and shown on the Drawings.

B. It is the intent of the Contract Documents that all process taps, isolation valves, nipples, penetrations, embedded instrumentation supports, conduit, wiring, terminations, and the installation of process instrumentation on process lines shall be provided under this Contract. The instrumentation subcontractor shall supervise installation of equipment provided under this Division where installation is provided by others.

C. Tapping and connections for primary process sensors shall be sized to suit each individual installation and the requirements of the instrument served. The Contractor shall ensure that the location, supports, orientation and dimensions of the connections and tapping for instrumentation furnished under this Division are such as to provide the proper bracing, the required accuracy of measurement, protection of the sensor from accidental damage and accessibility for maintenance while the plant is in operation. Isolation valves shall be provided at all process taps.

1.02 RELATED WORK SPECIFIED ELSEWHERE

A. Section 17000 – Control and Information System Scope and General Requirements

B. Section 17500 – Enclosures, General

C. Section 17698 – Instrumentation and Control System Accessories

D. Section 17700 – Powered Instruments, General

E. Section 17800 – Analytical Instruments, General

F. Unpowered instruments furnished with mechanical equipment shall be furnished, installed, tested and calibrated as specified elsewhere in the Contract Documents.

1.03 TOOLS, SUPPLIES AND SPARE PARTS

091605BR

A. Tools, supplies and spare parts shall be provided as specified in Section 17050.

B. In addition to the above requirements, the instrumentation subcontractor shall provide spare parts as specified in individual instrument specification sections.

PART 2 -- PRODUCTS

2.01 GENERAL

A. Unless otherwise specified, instruments shall be provided with enclosures to suit specified environmental conditions. Field-mounted devices shall be rugged and mounted on walls or pipe stanchions.

PART 3 -- EXECUTION

3.01 INSTALLATION

A. Equipment shall be located so that it is accessible for operation and maintenance. The instrumentation subcontractor shall examine the Drawings and Shop Drawings for various items of equipment in order to determine the best arrangement for the work as a whole, and shall supervise the installation of process instrumentation supplied under this Division.

B. Field equipment shall be wall mounted or mounted on two-inch diameter pipe stands welded to a 10-inch square 1/2-inch thick base plate unless shown adjacent to a wall or otherwise noted. Materials of construction shall be aluminum or 316 stainless steel. Instruments attached directly to concrete shall be spaced out from the mounting surface not less than 1/2-inch by use of phenolic spacers. Expansion anchors in walls shall be used for securing equipment or wall supports to concrete surfaces. Unless otherwise noted, field instruments shall be mounted between 48 and 60 inches above the floor or work platform.

C. Embedded pipe supports and sleeves shall be Schedule 40, Type 316 stainless steel pipe, ASA B-36.19, with stainless steel blind flange for equipment mounting as shown on the Drawings.

D. Materials for miscellaneous mounting brackets and supports shall be 316 stainless steel construction.

E. Pipe stands, miscellaneous mounting brackets and supports shall comply with the requirements of Division 5 of the specifications.

3.02 ADJUSTMENT AND CLEANING

A. The instrumentation subcontractor shall comply with the requirements of Division 1 of these Specifications and all instrumentation and control system tests, inspection, and calibration requirements for all instrumentation and controls provided under this Contract and specified herein. The Engineer, or his designated representative(s), reserves the right

to witness any test, inspection, calibration or start-up activity. Acceptance by the Engineer of any plan, report or documentation relating to any testing or commissioning activity specified herein shall not relieve the Contractor of his responsibility for meeting all specified requirements.

B. The instrumentation subcontractor shall provide the services of factory trained technicians, tools and equipment to field calibrate, test, inspect and adjust each instrument to its specified performance requirement in accordance with manufacturer's specifications and instructions. Any instrument which fails to meet any Contract requirements, or any published manufacturer performance specification for functional and operational parameters, shall be repaired or replaced, at the discretion of the Engineer, at no cost to the Owner. The Contractor shall bear all costs and provide all personnel, equipment and materials necessary to implement all installation tests and inspection activities for equipment specified herein.

C. At least 60 days before the anticipated initiation of installation testing, the Contractor shall submit to the Engineer a detailed description, of the installation tests to be conducted to demonstrate the correct operation of the instrumentation and control system.

D. Field instrument calibration requirements shall conform to the following:

1. The instrumentation subcontractor shall provide the services of factory trained instrumentation technicians, tools and equipment to field calibrate each instrument supplied under this Contract to its specified accuracy in accordance with the manufacturer's specification and instructions for calibration.

2. Each instrument shall be calibrated at 0, 25, 50, 75 and 100 percent of span using test instruments to simulate inputs and read outputs. Test instruments shall be rated to an accuracy of at least five (5) times greater than the specified accuracy of the instrument being calibrated. Where applicable, such test instruments shall have accuracy’s as set forth by the National Institute for Standards and Technology (NIST).

3. The instrumentation subcontractor shall provide a written calibration sheet to the Engineer for each instrument, certifying that it has been calibrated to its published specified accuracy. The Contractor shall submit proposed calibration sheets for various types of instruments for Engineer approval prior to the start of calibration. This sheet shall include but not be limited to date, instrument tag numbers, calibration data for the various procedures described herein, name of person performing the calibration, a listing of the published specified accuracy, permissible tolerance at each point of calibration, calibration reading as finally adjusted within tolerance, defect noted, corrective action required and corrections made.

4. If doubt exists as to the correct method for calibrating or checking the calibration of an instrument, the manufacturer's printed recommendations shall be used as an acceptable standard, subject to the approval of the Engineer.

5. Upon completion of calibration, devices shall not be subjected to sudden movements, accelerations, or shocks, and shall be installed in permanent

protected positions not subject to moisture, dirt, and excessive temperature variations. Caution shall be exercised to prevent such devices from being subjected to overvoltages, incorrect voltages, overpressure or incorrect air. Damaged equipment shall be replaced and recalibrated at no cost to the Owner.

- END OF SECTION -

SECTION 17650 - PRESSURE GAUGES

PART 1 -- GENERAL

1.01 THE REQUIREMENT

A. The Contractor shall furnish, test, install and place in satisfactory operation the pressure gauges, with all spare parts, accessories, and appurtenances as herein specified and as shown on the Drawings.

1.02 RELATED WORK SPECIFIED ELSEWHERE

A. Section 17000 – Control and Information System Scope and General Requirements

B. Section 17600 – Unpowered Instruments, General

C. Section 17698 – Instrumentation Accessories

PART 2 -- PRODUCTS

2.01 PRESSURE GAUGES

A. All gauges shall be designed in accordance with the ASME B40.1 entitled, "Gauges, Pressure, Indicating Dial Type - Elastic Element".

B. All gauges shall be direct reading type. Snubbers shall be provided on all gauges. Gauge full-scale pressure range shall be selected such that the maximum operating pressure shall not exceed the approximately 75% of the full-scale range.

C. Features

1. Mounting: ½" NPT, lower stem mount type
2. Accuracy: 0.5% full scale
3. Case: Solid front, black phenolic material
4. Dial: White background and black letters
5. Glass: Shatterproof
6. Blow-out protection: Back
7. Pressure element: stainless steel bourdon tube
8. Movement: Stainless steel, Teflon coated pinion gear and segment
9. Gaskets: Buna-N

D. Liquid-filled or equivalent mechanically-damped gauges shall be used if the gauges are installed with pumps, or where gauges are subjected to vibrations or pulsation. Filling fluid shall be silicone unless oxidizing agents such as sodium hypochlorite are present, where halocarbon shall be used.

021406BR

E. Gauge size shall be 2" for line sizes up to 3" and 4½" for line sizes of 4" or greater.

F. Diaphragm seals and isolating ring seals shall be furnished in accordance with the requirements specified under Section 17698 - Instrumentation and Control System Accessories.

G. The complete gauge assembly and appurtenances shall be fully assembled and tested prior to field mounting. A ½" isolation stainless steel ball valve shall be provided for each gauge assembly.

H. Pressure and vacuum gauges shall be Ashcroft Duragauge Model 1279, Ametek-U.S. Gauge Division, H.O. Trerice Co., WIKA Instrument Corporation, or equal.

PART 3 -- EXECUTION

3.01 REQUIREMENTS

A. Refer to Section 17600, Part 3.

- END OF SECTION -

SECTION 17675 - PRESSURE SWITCHES

PART 1 -- GENERAL

1.01 THE REQUIREMENT

A. The Contractor shall furnish, test, install and place in satisfactory operation the pressure switches, with all spare parts, accessories, and appurtenances as herein specified and as shown on the Drawings.

1.02 RELATED WORK SPECIFIED ELSEWHERE

A. Section 17000 - Control and Information System Scope and General Requirements

B. Section 17600 - Unpowered Instruments, General

PART 2 -- PRODUCTS

2.01 PRESSURE SWITCHES

A. Pressure, vacuum, and differential pressure switches shall be single or dual action with an adjustable setpoint for the process requirement and/or as specified herein. Switches shall be diaphragm or piston operated and activate S.P.D.T. snap action switches on increasing or decreasing pressure. Minimum differential shall be less than 10 percent of the range. Deadband shall be adjustable. Allowable surge pressure shall be a minimum 1.5 times the range. Each pressure switch shall have visible scale.

B. Pressure switches shall have a contact rating of 10 amperes at 120 volts AC. Pressure switches shall be in NEMA 4X enclosures. Switches shall have a repeatable accuracy of 1 percent of range. Pressure switches shall be isolated from the process fluid by a diaphragm seal or an isolation ring in locations as shown on the Contract Drawings and/or as specified. Wetted parts materials shall be compatible with the process fluid for corrosion resistance. Pressure switches shall be manufactured by ASCO, SOR, Inc., Ashcroft, or equal.

PART 3 -- EXECUTION

3.01 REQUIREMENTS

A. Refer to Section 17600 Part 3.

- END OF SECTION -

SECTION 17698 - INSTRUMENTATION AND CONTROL SYSTEM ACCESSORIES

PART 1 -- GENERAL

1.01 THE REQUIREMENT

A. The Contractor shall furnish, test, install and place in satisfactory operation the instrumentation and control system accessories with all spare parts, and appurtenances as herein specified and as shown on the Drawings.

1.02 RELATED WORK SPECIFIED ELSEWHERE

A. Section 17000 – Control and Information System Scope and General Requirements

B. Section 17600 – Unpowered Instruments, General

C. Section 17700 – Powered Instruments, General

D. Section 16902 – Electric Controls and Relays

PART 2 -- PRODUCTS

2.01 INSTRUMENTATION AND CONTROL SYSTEM ACCESSORIES

A. General: Accessories include various items of equipment that may be required in the system but are not scheduled. Accessories are shown on details, flow sheets or plans. Accessories are also called out in specifications for scheduled instruments and in the installation specifications. It is not intended, however, that each piece of hardware required will be specifically described herein. This subarticle shall be used as a guide to qualify requirements for miscellaneous hardware whether the specific item is described or not.

B. Process Tubing: Process tubing shall be 1/2 x 0.065-inch seamless, annealed, ASTM A-269 Type 316L stainless steel with Type 316 - 37 degrees stainless steel flared fittings or Swagelock or Parker-CPI flareless fittings.

C. Power, Control and Signal Cables: Power, control and signal wiring shall be provided under Division 16 of the Specifications.

D. Chemical Diaphragm Seals: Diaphragm seals shall be provided for isolation of pressure gauges, switches and transmitters attached to systems containing chemical solutions or corrosive fluids. As a minimum, seals shall be of all 316 stainless steel construction. In general, diaphragms shall be 316L stainless steel for operating pressures at or above 15 psi and elastomers for operating pressures below 15 psi. However, all components shall be non-reactive with the process fluid in all cases. Refer to the Instrument Schedules for specific materials requirements. Seal shall have fill connection, 1/4-inch NPT valved flush

082013BR

port and capable of disassembly without loss of filler fluid. Where specified, diaphragm seals shall comply with the above requirements and shall be provided with 316 SS factory filled capillaries. Seals shall be Helicoid Type 100 HA, Mansfield & Green, Ashcroft, or equal.

E. Isolating Ring Seals: For solids bearing fluids, line pressure shall be sensed by a flexible cylinder lining and transmitted via a captive sensing liquid to the associated pressure sensing instrument(s).

1. Full Line Size Isolating Ring Seals - For all grit/sludge/slurry/scum applications or wherever the associated pressure instrument is used for control purposes, the sensor body shall be full line size wafer design. Except where noted on the Drawings and/or Instrument Schedule, full line size ring seals will not be required for return activated sludge (RAS) lines, but will have tapped ring seals as specified in Item 2, below. Full line size isolating ring seals shall have 316 stainless steel housing and assembly flanges and Buna N flexible cylinder lining for in-line mounting. The wafer shall have through bolt holes or centerline gauge for positive alignment with the associated flanged piping. The captive liquid chamber and associated instrument(s) shall be furnished with threaded drain tap and plug. Isolating ring seals shall be RED Valve Series 40, Ronningen-Petter Iso-Ring, Moyno RKL Series W, Onyx Isolator Ring, or equal.

2. Tapped Isolating Ring Seals - For all other solids bearing fluids, pressure shall be sensed via a minimum 1/2" diameter spool-type isolating ring seal mounted on a 1/2" pipe nipple at 90° from the process piping. An isolation ball valve shall be provided between the process piping and the ring seal, and a cleanout ball valve shall be provided between the ring seal and the atmosphere. The pressure instrument shall be back or side mounted to the ring seal such that the gauge or readout may be viewed normally. Tapped isolating ring seals for solids service shall be Red Valve Series 42/742, Ronningen-Petter Iso-Spool, Onyx Isolator Ring, or equal.

F. Filling Medium: The filling medium between instruments, isolating ring seals and diaphragm seals shall be a liquid suitable for operation in an ambient temperature ranging from -10°F to +150°F. Filling medium shall be silicone unless oxidizing agents such as sodium hypochlorite are present, where halocarbon shall be used.

G. Isolation Valves: Isolation valves shall be 1/2 - inch diameter ball valves with 316 stainless steel body, 316 stainless steel ball, except that materials of construction shall be suitable for the associated process fluid where applicable (i.e., chemical service).

H. Sirens: Sirens shall be UL Listed, heavy duty, AC motor driven, weatherproof type capable of producing a minimum of 111 dBA at 10 feet. Power supply shall be 120 VAC, 60 hertz. Siren shall be McMaster-Carr Model 6392T11, Federal Signal Corporation equivalent, Edwards Signaling Company equivalent, or equal.

I. Strobe Lights: Strobe lights shall be high profile with Type 304 stainless steel base. Light is rated NEMA 4. Light shall have an outer dome to provide extra lens protection. Lens color shall be as indicated on the Drawings. Surface mount hardware shall be included.

Power supply shall be 120 VAC, 60 hertz. Strobe light shall be McMaster-Carr Model 5848T71, Federal Signal Corporation equivalent, Edwards Signaling Company equivalent, or equal.

PART 3 -- EXECUTION

3.01 REQUIREMENTS

A. Refer to Section 17600, Part 3 of the specifications.

- END OF SECTION -

SECTION 17700 - POWERED INSTRUMENTS, GENERAL

PART 1 -- GENERAL

1.01 THE REQUIREMENT

A. The instrumentation subcontractor shall furnish, install, test and place in operation powered process instrumentation (flow elements, level transmitters, etc.) as scheduled herein together with all signal converters, transmitters, isolators, amplifiers, etc. to interface all instrumentation, panels, controls and process equipment control panels with the process control system as shown on the Drawings and as specified. Powered instruments are those instruments that require power (120 VAC or 24 VDC loop power) to operate. The Contractor may elect to install primary elements (flowmeters, etc.) on process lines provided that the instrumentation subcontractor provides full on-site supervision during installation. Mounting of associated transmitters, indicators, power supplies, brackets and appurtenances shall be provided as specified herein and shown on the Drawings.

B. It is the intent of the Contract Documents that all process taps, isolation valves, nipples, penetrations, embedded instrumentation supports, conduit, wiring, terminations, and the installation of process instrumentation on process lines shall be provided under this Contract. The instrumentation subcontractor shall supervise installation of equipment provided under this Division where installation is provided by others.

C. Tapping and connections for primary process sensors shall be sized to suit each individual installation and the requirements of the instrument served. The Contractor shall ensure that the location, supports, orientation and dimensions of the connections and tapping for instrumentation furnished under this Division are such as to provide the proper bracing, the required accuracy of measurement, protection of the sensor from accidental damage, and accessibility for maintenance while the plant is in operation. Isolation valves shall be provided at all process taps.

1.02 RELATED WORK SPECIFIED ELSEWHERE

A. Section 17000 – Control and Information System Scope and General Requirements

B. Section 17500 – Enclosures, General

C. Section 17600 – Unpowered Instruments, General

D. Section 17698 – Instrumentation and Control System Accessories

E. Section 17800 – Analytical Instruments, General

F. Powered instruments furnished with mechanical equipment shall be furnished, installed, tested and calibrated as specified elsewhere in the Contract Documents.

080305BR

PART 2 -- PRODUCTS

2.01 GENERAL

A. All instrumentation supplied shall be the manufacturer's latest design. Unless otherwise specified, instruments shall be solid state, electronic, using enclosures to suit specified environmental conditions. Microprocessor-based equipment shall be supplied unless otherwise specified. All instruments shall be provided with mounting hardware and floor stands, wall brackets, or instrument racks as shown on the Drawings, or as required.

B. Equipment installed in a hazardous area shall meet Class, Group, and Division as shown on the Drawings, to comply with the National Electrical Code.

C. All field instrumentation for outdoor service shall be provided with enclosures which are suitable for outdoor service, as follows:

1. Where the manufacturer's enclosures are suitable for outdoor service, they shall be provided with instrument sunshades. Sunshades shall be Style E as manufactured by O'Brien Corporation, or equal. Where possible, these instruments shall be mounted in a north facing direction.

2. Where the manufacturer's standard enclosures are not suitable for outdoor service, instruments shall be mounted in Field Panels in accordance with Section 17520, Field Panels, or may be furnished with Vipak instrument field enclosures as manufactured by O'Brien Corporation, equivalent by Intertec, or equal. It shall not be necessary to provide the manufacturer's NEMA 4 or 4X enclosures for instruments that will be subsequently mounted in separate field panels.

D. All instruments shall return to accurate measurement without manual resetting upon restoration of power after a power failure.

E. Unless otherwise shown or specified, local indicators shall be provided for all instruments. Where instruments are located in inaccessible locations, local indicators shall be provided and shall be mounted as specified in Subsection 3.01 (B) herein. All indicator readouts shall be linear in process units. Readouts of 0-100% shall not be acceptable (except for speed and valve position). Isolated outputs shall be provided for all transmitters.

F. Unless otherwise specified, field instrument and power supply enclosures shall be 316 stainless steel, fiberglass or PVC coated copper-free cast aluminum NEMA 4X construction.

G. Where separate elements and transmitters are required, they shall be fully matched, and unless otherwise noted, installed adjacent to the sensor. Special cables or equipment shall be supplied by the associated equipment manufacturer.

H. Electronic equipment shall utilize printed circuitry and shall be coated (tropicalized) to prevent contamination by dust, moisture and fungus. Solid-state components shall be conservatively rated for long-term performance and dependability over ambient

atmosphere fluctuations. Ambient conditions shall be -20 to 50 degrees C and 20 to 100 percent relative humidity, unless otherwise specified. Field mounted equipment and system components shall be designed for installation in dusty, humid, and corrosive service conditions.

I. All devices furnished hereunder shall be heavy-duty type, designed for continuous industrial service. The system shall contain products of a single manufacturer, insofar as possible, and shall consist of equipment models that are currently in production. All equipment provided, where applicable, shall be of modular construction and shall be capable of field expansion.

J. All non-loop-powered instruments and equipment shall be designed to operate on a 60 Hz AC power source at a nominal 117 V, plus or minus 10 percent, except where specifically noted. All regulators and power supplies required for compliance with the above shall be provided. Where equipment requires voltage regulation, constant voltage transformers shall be supplied.

K. All analog transmitter and controller outputs shall be isolated, 4-20 milliamps into a load of 0-750 ohms, unless specifically noted otherwise. All switches shall have double-pole, double-throw contacts rated at a minimum of 600 VA, unless specified otherwise.

L. Materials and equipment used shall be UL approved wherever such approved equipment and materials are available.

PART 3 -- EXECUTION

3.01 INSTALLATION

A. General

1. Equipment shall be located so that it is accessible for operation and maintenance. The instrumentation subcontractor shall examine the Drawings and shop drawings for various items of equipment in order to determine the best arrangement for the work as a whole, and shall supervise the installation of process instrumentation supplied under this Division.

B. Electrical work shall be performed in compliance with all applicable local codes and practices. Where the Contract Documents do not delineate precise installation procedures, API RP550 shall be used as a guide to installation procedures.

C. Equipment Mounting and Support

1. Field equipment shall be wall mounted or mounted on two-inch diameter pipe stands welded to a 10-inch square by 1/2-inch thick base plate unless shown adjacent to a wall or otherwise noted. Materials of construction shall be aluminum or 316 stainless steel. Instruments attached directly to concrete shall be spaced out from the mounting surface not less than 1/2-inch by use of phenolic spacers. Expansion anchors in walls shall be used for securing equipment or wall supports

to concrete surfaces. Unless otherwise noted, field instruments shall be mounted between 48 and 60 inches above the floor or work platform.

2. Embedded pipe supports and sleeves shall be schedule 40, 316 stainless steel pipe, ASA B-36.19, with stainless steel blind flange for equipment mounting as shown on the Drawings.

3. Materials for miscellaneous mounting brackets and supports shall be 316 stainless steel construction.

4. Pipe stands, miscellaneous mounting brackets and supports shall comply with the requirements of Division 5 of the specifications.

5. Transmitters shall be oriented such that output indicators are readily visible.

D. Control and Signal Wiring

1. Electrical, control and signal wiring connections to transmitters and elements mounted on process piping or equipment shall be made through liquid-tight flexible conduit. Conduit seals shall be provided where conduits enter all field instrument enclosures and all cabinetry housing electrical or electronic equipment.

3.02 ADJUSTMENT AND CLEANING

A. General

1. The instrumentation subcontractor shall comply with the requirements of Division 1 of these Specifications and all instrumentation and control system tests, inspection, and calibration requirements for all instrumentation and controls provided under this Contract and specified herein. The Engineer, or his designated representative(s), reserves the right to witness any test, inspection, calibration or start-up activity. Acceptance by the Engineer of any plan, report or documentation relating to any testing or commissioning activity specified herein shall not relieve the Contractor of his responsibility for meeting all specified requirements.

2. The instrumentation subcontractor shall provide the services of factory trained technicians, tools and equipment to field calibrate, test, inspect and adjust each instrument to its specified performance requirement in accordance with manufacturer's specifications and instructions. Any instrument which fails to meet any Contract requirements, or any published manufacturer performance specification for functional and operational parameters, shall be repaired or replaced, at the discretion of the Engineer, at no cost to the Owner. The Contractor shall bear all costs and provide all personnel, equipment and materials necessary to implement all installation tests and inspection activities for equipment specified herein.

3. At least 60 days before the anticipated initiation of installation testing, the Contractor shall submit to the Engineer a detailed description, of the installation

tests to be conducted to demonstrate the correct operation of the instrumentation supplied hereunder.

B. Field Instrument Calibration Requirements

1. The instrumentation subcontractor shall provide the services of factory trained instrumentation technicians, tools and equipment to field calibrate each instrument supplied under this Contract to its specified accuracy in accordance with the manufacturer's specification and instructions for calibration.

2. If the manufacturer's recommendations require calibration, each instrument shall be calibrated at 0, 25, 50, 75 and 100 percent of span using test instruments to simulate inputs and read outputs. Test instruments shall be rated to an accuracy of at least five (5) times greater than the specified accuracy of the instrument being calibrated. Where applicable, such test instruments shall have accuracy's as set forth by the National Institute for Standards and Technology (NIST).

3. The instrumentation subcontractor shall provide a written calibration sheet to the Engineer for each instrument, certifying that it has been calibrated to its published specified accuracy. The Contractor shall submit proposed calibration sheets for various types of instruments for Engineer approval prior to the start of calibration. This sheet shall include but not be limited to date, instrument tag numbers, calibration data for the various procedures described herein, name of person performing the calibration, a listing of the published specified accuracy, permissible tolerance at each point of calibration, calibration reading as finally adjusted within tolerance, defect noted, corrective action required and corrections made.

4. If doubt exists as to the correct method for calibrating or checking the calibration of an instrument, the manufacturer's printed recommendations shall be used as an acceptable standard, subject to the approval of the Engineer.

5. Upon completion of calibration, devices calibrated hereunder shall not be subjected to sudden movements, accelerations, or shocks, and shall be installed in permanent protected positions not subject to moisture, dirt, and excessive temperature variations. Caution shall be exercised to prevent such devices from being subjected to overvoltages, incorrect voltages, overpressure or incorrect air. Damaged equipment shall be replaced and recalibrated at no cost to the Owner.

6. After completion of instrumentation installation, the instrumentation subcontractor shall perform a loop check. The Contractor shall submit final loop test results with all instruments listed in the loop. Loop test results shall be signed by all representatives involved for each loop test.

- END OF SECTION -

SECTION 17701 - MAGNETIC FLOW METERS

PART 1 -- GENERAL

1.01 THE REQUIREMENT

A. The Contractor shall furnish, test, install and place in satisfactory operation the magnetic flow meters, with all spare parts, accessories, and appurtenances as herein specified and as shown on the Drawings.

1.02 RELATED WORK SPECIFIED ELSEWHERE

A. Section 17000 – Control and Information System Scope and General Requirements

B. Section 17700 – Powered Instruments, General

1.03 TOOLS, SUPPLIES AND SPARE PARTS

A. Furnish one portable primary head simulator for calibration and testing of magnetic flowmeter signal converters. The calibrator shall be furnished complete with rechargeable battery pack, test leads, spare battery pack, charger, carrying case and accessories. Calibrator shall be furnished by the flowmeter manufacturer, and shall be fully matched to the instrumentation furnished.

PART 2 -- PRODUCTS

2.01 MAGNETIC FLOW METER SYSTEMS

A. Magnetic flow meter systems shall include a magnetic flow tube and a microprocessor-based "smart" transmitter that is capable of converting and transmitting a signal from the flow tube. Magnetic flow meters shall utilize the characterized field principle of electromagnetic induction, and shall produce DC signals directly proportional to the liquid flow rate.

B. Each meter shall be furnished with a stainless steel or carbon steel metering tube and carbon steel flanges with a polyurethane, ceramic, neoprene, or Teflon liner as required by the application and/or as specified herein. Liner shall have a minimum thickness of 0.125 inches. The inside diameter of the liner shall be within 0.125 inches of the inside diameter of the adjoining pipe. Liner protectors shall be provided on all flow tubes.

C. The flow tube shall be provided with flush mounted electrodes. Ultrasonic electrode cleaning shall not be acceptable.

D. Grounding rings shall be provided for all meters.

E. All materials of construction for metallic wetted parts (electrodes, grounding rings, etc.) shall be minimum 316 stainless steel, but shall be compatible with the process fluid for each meter in accordance with the recommendations of the manufacturer. Verify with the manufacturer that the selected electrode material for the concentrate magmeters and the selected electrode material for the permeate magmeters is the least likely material to be effected by either corrosion or erosion.

F. Flow tube shall be rated for pressures up to 1.1 times the flange rating of adjacent piping. System shall be rated for ambient temperatures of -30 to +65°C. Meter and transmitter housings shall meet NEMA 4X requirements as a minimum. When meter and transmitter are located in classified explosion hazard areas, the meter and transmitter housings shall be selected with rating to meet the requirements for use in those areas. Non-metallic transmitter housings shall not be acceptable.

G. The transmitter shall provide pulsed DC coil drive current to the flow tube and shall convert the returning signal to a linear, isolated 4-20 mA DC signal. The transmitter shall utilize "smart" electronics and shall contain automatic, continuous zero correction, signal processing routines for noise rejection, and an integral LCD readout capable of displaying flow rate and totalized flow. The transmitter shall continuously run self-diagnostic routines and report errors via English language messages.

H. The transmitter's preamplifier input impedance shall be a minimum of 10^9-10^{11} ohms which shall make the system suited for the amplification of low-level input signals and capable of operation with a material build up on the electrodes.

I. The transmitter shall provide an automatic low flow cutoff below a user configurable low flow condition (0-10%). The transmitter's outputs shall also be capable of being forced to zero by an external contact operation.

J. Each flow tube shall be factory calibrated and assigned a calibration constant or factor to be entered into the associated transmitter as part of the meter configuration parameters. Manual calibration of the flow meter shall not be required. Meter configuration parameters shall be stored in non-volatile memory in the transmitter. An output hold feature shall be provided to maintain a constant output during configuration changes.

K. The transmitter shall be capable of communicating digitally with a remote configuration device via a frequency-shift-keyed, high frequency signal superimposed on the 4-20 mA output signal. The remote configuration device shall be capable of being placed anywhere in the 4-20 mA output loop. The remote configuration device shall be as specified under Section 17700. A password-based security lockout feature shall be provided to prevent unauthorized modification of configuration parameters.

L. Accuracy shall be 0.50% of rate over the flow velocity range of 0.3 to 10.0 m/s. Repeatability shall be 0.1% of rate; minimum turndown shall be 100:1. Maximum response time shall be adjustable between 1 and 100 seconds as a minimum. Transmitter ambient temperature operating limits shall be -10 to +50°C. Power supply shall be 115 VAC, 60 Hz.

M. Flow tubes shall be 150-lb flange mounted unless otherwise noted. The cables for interconnecting the meter and transmitter shall be furnished by the manufacturer. Transmitter shall be mounted integrally on flow tube, wall, or 2-inch pipe mounted as shown in the Drawings and/or as specified.

N. Magnetic flow meter systems shall be as manufactured by Rosemount, ABB, Endress + Hauser, Krohne or equal.

PART 3 -- EXECUTION

3.01 REQUIREMENTS

A. Ground magnetic flow meter flow tubes and grounding rings in strict accordance with the manufacturer's recommendations.

B. Refer to Section 17700, Part 3, for further requirements.

- END OF SECTION -

SECTION 17760 - PRESSURE INDICATING TRANSMITTERS

PART 1 -- GENERAL

1.01 THE REQUIREMENT

A. The Contractor shall furnish, test, install and place in satisfactory operation the pressure indicating transmitters, with all spare parts, accessories, and appurtenances as herein specified and as shown on the Drawings.

1.02 RELATED WORK SPECIFIED ELSEWHERE

A. Section 17000 – Control and Information System Scope and General Requirements

B. Section 17700 – Powered Instruments, General

PART 2 -- PRODUCTS

2.01 PRESSURE INDICATING TRANSMITTERS, GENERAL

A. Pressure indicating transmitters shall consist of a piezoresistive silicon pressure transducer with a process-isolated diaphragm, silicone oil fill, and microprocessor-based electronics. The pressure transducer shall be mechanically, electrically, and thermally isolated from the process and the environment, and shall have an integral temperature compensation sensor. Factory set correction coefficients and diagnostic data shall be stored in the transmitter's non volatile memory, for correction and linearization of the output. Span and zero shall be continuously adjustable, externally, over the entire range. Span and zero adjustments shall be capable of being disabled internally. The maximum zero elevation and maximum zero suppression shall be adjustable to anywhere within sensor limits.

B. Each transmitter shall be furnished with an internal LCD indicator capable of displaying engineering units and/or milliamps, and mounting hardware as required. Each transmitter shall have a stainless steel tag with calibration data attached to body. Transmitters shall satisfy the performance criteria in Table 1, below.

Table 1. Pressure Indicating Transmitter Performance Criteria	
Accuracy(1)	± 0.06% of calibrated span, zero-based

Table 1. Pressure Indicating Transmitter Performance Criteria	
Calibration Stability	± 0.20% of upper range limit (URL) over ten years
Field-Adjustable Rangeability	100:1 input range
Enclosure Type	NEMA 4X, Weather and Corrosion-Resistant
Enclosure Materials	Low-Copper Aluminum, with epoxy or powder coating
Process Wetted Materials	316 Stainless Steel, or better as scheduled or required for process compatibility
Ambient Environment Limits	-40 to 85 degrees Celsius at 0-100% relative humidity
Hazardous Environment Approval	Factory Mutual (FM) Approved for Class I, Division 1, Groups C and D
Overload Capacity	25 MPa (3,600 psi), or higher
Power Supply	24 VDC, two-wire design
Output	Linear isolated 4-20 mA 24 VDC with HART
Output Damping	Adjustable, 0-36 seconds

Notes:
(1) Including nonlinearity, hysteresis, and repeatability errors

2.02 GAUGE PRESSURE INDICATING TRANSMITTERS

A. Gauge pressure indicating transmitters shall satisfy all requirements of Article 2.01.

B. Where scheduled, gauge pressure indicating transmitters shall be calibrated in feet of liquid for liquid level service.

C. Where scheduled, gauge pressure indicating transmitters with ranges in inches water column (in. w.c.) shall achieve the scheduled range with a turndown ratio not to exceed 1:5. As an example, a gauge pressure indicating transmitter scheduled for 0-20” w.c. shall have an uncalibrated range of -50 to +50” w.c. or 0 to 100” w.c., or less.

D. Gauge pressure indicating transmitters shall be Emerson Process Management (Rosemount) Model 3051CG, Endress + Hauser Cerabar PMP71, ABB Model 266GSH, or equal.

2.03 DIFFERENTIAL PRESSURE INDICATING TRANSMITTERS

A. Differential pressure indicating transmitters shall satisfy all requirements of Article 2.01.

B. The electronics sections of differential pressure transmitters shall contain user-selectable square root extractors to provide a linear 4-20 mA DC output proportional to flow, when activated. Square root extractor circuitry shall be activated only for incompressible fluid flow applications (i.e., water). Flow rates for compressible fluids (i.e., air) shall be calculated externally using line temperature and static pressure corrections as specified elsewhere in Division 17. In addition, each flow transmitter shall be furnished with laminated flow versus differential pressure curves wall mounted adjacent to the transmitter.

C. Differential pressure indicating transmitters shall be Emerson Process Management (Rosemount) Model 3051CD, Endress + Hauser Deltabar PMD77, Siemens Sitrans P500, ABB Model 266DSH, or equal.

2.04 FLANGE MOUNTED LEVEL INDICATING TRANSMITTERS

A. Flange-mounted tank liquid level indicating transmitters shall satisfy all requirements of Article 2.01.

B. The flange-mounted sensor shall consist of a special non-corrosive isolating diaphragm with fill fluid in a sealed capillary system to transmit liquid pressure to the sensing element. A second isolating diaphragm shall transmit pressure through the fill fluid to the sensing diaphragm in the center of the capacitance cell. An isolating diaphragm and fluid fill shall also be provided on the opposite side of the sensing diaphragm to convey atmospheric or reference pressure.

C. All mounting flanges, diaphragms, O-rings and materials used in construction shall be non-corroding, compatible with each other, and compatible with the liquid being measured.

D. Flange-mounted liquid level transmitters shall be Emerson Process Management (Rosemount) Model 3051L, Endress + Hauser Cerabar PMP75, ABB Model 266GDH, or equal.

2.05 VALVE MANIFOLDS

A. Gauge and differential pressure indicating transmitters shall be furnished and installed with a valve manifold. Valve manifolds shall satisfy the criteria in Table 2, below.

Table 2. Valve Manifold Criteria

Table 2. Valve Manifold Criteria	
Materials	316L Stainless Steel, or better to match transmitter wetted parts
Construction Type	Milled
Valve Type	Needle Valve with non-rotating plug, T-bar handle
Packing Material	Polytetrafluoroethylene (PTFE) (1)
Rated Pressure	4,000 psi at 200 degrees Celsius

Notes:
(1) Alternative packing materials shall be furnished as scheduled herein, shown on the drawings, and for applications where temperature may exceed 200 degrees Celsius

B. Dust caps shall be installed on all manifold connections during shipping, and remain installed until connection of the transmitter and process piping. Dust caps on vent and purge connections shall be 316 stainless steel, minimum.

C. All manifolds shall be configured to allow isolation, venting, removal, and calibration of the transmitter without disassembly of process piping.

D. Gauge pressure indicating transmitters shall be furnished with a two-valve manifold. Valve functions shall be isolate and vent. Two-valve manifolds shall be Ashcroft V02 Series, Hoke GP Series, equivalents by transmitter manufacturer, or equal.

E. Differential pressure indicating transmitters shall be furnished with a factory-installed, direct mounted, three-valve manifold. Valve functions shall be isolate (each process connection) and equalize. Transmitter interface shall be per IEC 61518, Type B. Mounting hardware shall be coordinated between manifold and transmitter suppliers. Three-valve manifolds shall be by the transmitter manufacturer, installed and pressure-tested at the factory.

2.06 REMOTE SEALS

A. Remote seals shall be furnished with pressure indicating transmitters as scheduled or shown on the Drawings. Remote seals shall be furnished and installed complete with capillary tubes, link kits, and fill fluid as required for a complete and functional installation.

B. Remote seals, link kits, and other appurtenances shall be manufactured by the pressure indicating transmitter manufacturer, and installed pursuant to all manufacturer's recommendations.

PART 3 -- EXECUTION

3.01 REQUIREMENTS

A. Gauge pressure indicating transmitters shall be factory calibrated and a copy of the calibration report shall be in the O&M manual.

B. Refer to Section 17700, Part 3 of the Specifications.

- END OF SECTION -

SECTION 17800 - ANALYTICAL INSTRUMENTS, GENERAL

PART 1 -- GENERAL

1.01 THE REQUIREMENT

A. The instrumentation subcontractor shall furnish, install, test and place in operation the analytical instruments as scheduled in the following sections together with all signal converters, transmitters, isolators, amplifiers, etc. to interface with the process control system as shown on the Drawings and as specified. The Contractor may elect to install sensors on process lines provided that the instrumentation subcontractor provides full on-site supervision during installation. Mounting of associated indicators, sensors, sampling pumps, power supplies, brackets and appurtenances shall be provided as specified herein and shown on the Drawings.

B. It is the intent of the Contract Documents that all process taps, isolation valves, nipples, penetrations, embedded instrumentation supports, conduit, wiring, terminations, and the installation of process instrumentation on process lines shall be provided under this Contract. The instrumentation subcontractor shall supervise installation of equipment provided under this Section where installation is provided by others.

C. Tapping and connections for primary process sensors shall be sized to suit each individual installation and the requirements of the analytical instrument served. The Contractor shall ensure that the location, supports, orientation and dimensions of the connections and tapping for instruments furnished under this Section are such as to provide the proper bracing, the required accuracy of measurement, protection of the sensor from accidental damage and accessibility for maintenance while the plant is in operation. Isolation valves shall be provided at all process taps.

1.02 RELATED WORK SPECIFIED ELSEWHERE

A. Section 17000 – Control and Information System Scope and General Requirements

B. Section 17500 – Enclosures, General

C. Section 17600 – Unpowered Instruments General

D. Section 17698 – Instrumentation and Control System Accessories

E. Section 17700 – Powered Instruments General

F. Analytical instruments furnished with mechanical equipment shall be furnished, installed, tested and calibrated as specified elsewhere in the Contract Documents.

1.03 TOOLS, SUPPLIES AND SPARE PARTS

A. Tools, supplies and spare parts shall be provided as specified in Section 17050.

012506BR

B. Additional items as recommended by the analytical instrument manufacturers or as described for the specified analytical instrument sections shall be provided.

PART 2 -- PRODUCTS

2.01 GENERAL

A. All instrumentation supplied shall be the manufacturer's latest design. Unless otherwise specified, instruments shall be solid state, electronic, using enclosures to suit specified environmental conditions. Microprocessor-based equipment shall be supplied unless otherwise specified. All instruments shall be provided with mounting hardware and floor stands, wall brackets, or instrument racks as shown on the Drawings, or as required.

B. Equipment installed in a hazardous area shall meet Class, Group, and Division as shown on the Drawings, to comply with the National Electrical Code.

C. All field instrumentation for outdoor service shall be provided with enclosures that are suitable for outdoor service, as follows:

1. Where the manufacturer's enclosures are suitable for outdoor service, they shall be provided with instrument sunshades. Sunshades shall be Style E as manufactured by O'Brien Corporation, or equal. Where possible, these instruments shall be mounted in a north facing direction.

2. Where the manufacturer's standard enclosures are not suitable for outdoor service, instruments shall be mounted in Field Panels in accordance with Section 17520, Field Panels, or may be furnished with Vipak instrument field enclosures as manufactured by O'Brien Corporation, equivalent by Intertec, or equal. It shall not be necessary to provide the manufacturer's NEMA 4 or 4X enclosures for instruments that will be subsequently mounted in separate field panels.

D. All instruments shall return to accurate measurement without manual resetting upon restoration of power after a power failure.

E. Unless otherwise shown or specified, local indicators shall be provided for all instruments. Where instruments are located in inaccessible locations, local indicators shall be provided and shall be mounted as specified in Subsection 3.01 B herein. All indicator readouts shall be linear in process units. Readouts of 0-100% shall not be acceptable (except for speed and valve position). Isolated outputs shall be provided for all transmitters.

F. Unless otherwise specified, field instrument and power supply enclosures shall be 316 stainless steel, fiberglass (or equivalent) or PVC coated copper-free cast aluminum NEMA 4X construction.

G. Where separate elements and transmitters are required, they shall be fully matched, and unless otherwise noted, installed adjacent to the sensor. Special cables or equipment shall be supplied by the associated equipment manufacturer.

H. Electronic equipment shall utilize printed circuitry and shall be coated (tropicalized) to prevent contamination by dust, moisture and fungus. Solid-state components shall be conservatively rated for long-term performance and dependability over ambient atmosphere fluctuations. Ambient conditions shall be -20 to 50 degrees C and 20 to 100 percent relative humidity, unless otherwise specified. Field mounted equipment and system components shall be designed for installation in dusty, humid, and corrosive service conditions.

I. All devices furnished hereunder shall be heavy-duty type, designed for continuous industrial service. The system shall contain products of a single manufacturer, insofar as possible, and shall consist of equipment models that are currently in production. All equipment provided, where applicable, shall be of modular construction and shall be capable of field expansion.

J. All non-loop-powered instruments and equipment shall be designed to operate on a 60 Hz AC power source at a nominal 117 V, plus or minus 10 percent, except where specifically noted. All regulators and power supplies required for compliance with the above shall be provided. Where equipment requires voltage regulation, constant voltage transformers shall be supplied.

K. All analog transmitter and controller outputs shall be isolated, 4-20 milliamps into a load of 0-750 ohms, unless specifically noted otherwise. All switches shall have double-pole, double-throw contacts rated at a minimum of 600 VA, unless specified otherwise.

L. Materials and equipment used shall be UL approved wherever such approved equipment and materials are available.

2.02 ANALYSIS INSTRUMENTS

A. Liquid samples shall not pass through housings containing analyzer electronics. Process fluid temperature will be within a range of 40 to 90 degrees F.

B. Where ambient temperatures will affect accuracy by more than 1 percent of span, a suitable isothermal enclosure with thermostatically controlled space heater shall be provided.

C. Sample assemblies shall be suitable for submersion or flow-through service as noted and shall be chemically inert to constituents of raw wastewater solids or other chemical environment, as scheduled. Where the sample is drawn prior to filtration, the sample assemblies shall be capable of handling solids and grease.

D. Each analyzer requiring reagents and/or other replaceable parts shall be furnished with sufficient chemicals and replaceable parts for startup and acceptance tests and the specified warranty period.

E. Contractor's submittals on these analyzers shall include information on monthly reagent consumption and a list of replaceable parts required for periodic maintenance and the recommended operating periods between replacements. Installation of analyzers and

sample preparation shall be in accordance with the analyzer manufacturer's instructions.

F. Analysis instrumentation performance, accuracy and reproducibility shall be as prescribed in APHA/AWWA/WEF "Standard Methods for the Examination of Water and Wastewater", latest edition. For those measurements specified herein, for which performance characteristics are not listed in the above, the supplier shall state instrument performance characteristics. The "referee" method shall be as prescribed in EPA Methods for Chemical Analysis of Water and Wastes (1971).

PART 3 -- EXECUTION

3.01 INSTALLATION

A. General

1. Equipment shall be located so that it is accessible for operation and maintenance. The instrumentation subcontractor shall examine the Drawings and shop drawings for various items of equipment in order to determine the best arrangement for the work as a whole, and shall supervise the installation of process instrumentation supplied under this Division.

2. Electrical work shall be performed in compliance with all applicable local codes and practices. Where these specifications and the Drawings do not delineate precise installation procedures, API RP550 shall be used as a guide to installation procedures.

B. Equipment Mounting and Support

1. Field equipment shall be wall mounted or mounted on two-inch diameter pipe stands welded to a 10-inch square by 1/2-inch thick base plate unless shown adjacent to a wall or otherwise noted. Materials of construction shall be aluminum or 316 stainless steel. Instruments attached directly to concrete shall be spaced out from the mounting surface not less than 1/2-inch by use of phenolic spacers. Expansion anchors in walls shall be used for securing equipment or wall supports to concrete surfaces. Unless otherwise noted, field instruments shall be mounted between 48 and 60 inches above the floor or work platform.

2. Embedded pipe supports and sleeves shall be Schedule 40, Type 316 stainless steel pipe, ASA B-36.19, with stainless steel blind flange for equipment mounting as shown on the Drawings.

3. Materials for miscellaneous mounting brackets and supports shall be 316 stainless steel construction.

4. Pipe stands, miscellaneous mounting brackets and supports shall comply with the requirements of Division 5 of the specifications.

5. Transmitters shall be oriented such that output indicators are readily visible.

C. Control and Signal Wiring

1. Electrical, control and signal wiring connections to transmitters and elements mounted on process piping or equipment shall be made through liquid-tight flexible conduit. Conduit seals shall be provided where conduits enter all field instrument enclosures and all cabinetry housing electrical or electronic equipment.

3.02 ADJUSTMENT AND CLEANING

A. The instrumentation subcontractor shall comply with the requirements of Division 1 of these Specifications and all instrumentation and control system tests, inspection, and calibration requirements for all instrumentation and controls provided under this Contract and specified herein. The Engineer, or his designated representative(s), reserves the right to witness any test, inspection, calibration or start-up activity. Acceptance by the Engineer of any plan, report or documentation relating to any testing or commissioning activity specified herein shall not relieve the Contractor of his responsibility for meeting all specified requirements.

B. The instrumentation subcontractor shall provide the services of factory trained technicians, tools and equipment to field calibrate, test, inspect and adjust each instrument to its specified performance requirement in accordance with manufacturer's specifications and instructions. Any instrument which fails to meet any Contract requirements, or any published manufacturer performance specification for functional and operational parameters, shall be repaired or replaced, at the discretion of the Engineer, at no cost to the Owner. The Contractor shall bear all costs and provide all personnel, equipment and materials necessary to implement all installation tests and inspection activities for equipment specified herein.

C. At least 60 days before the anticipated initiation of installation testing, the Contractor shall submit to the Engineer a detailed description, in duplicate, of the installation tests to be conducted to demonstrate the correct operation of the instrumentation supplied hereunder.

D. Field instrument calibration shall conform to the following requirements:

1. The instrumentation subcontractor shall provide the services of factory trained instrumentation technicians, tools and equipment to field calibrate each instrument supplied under this Contract to its specified accuracy in accordance with the manufacturer's specification and instructions for calibration.

2. Each instrument shall be calibrated at 0, 25, 50, 75 and 100 percent of span using test instruments and specified chemicals of known values to simulate inputs and read outputs. Test instruments shall be rated to an accuracy of at least five (5) times greater than the specified accuracy of the instrument being calibrated. Where applicable, such test instruments shall have accuracy’s as set forth by the National Institute for Standards and Technology (NIST).

3. The instrumentation subcontractor shall provide a written calibration sheet to the Engineer for each instrument, certifying that it has been calibrated to its published specified accuracy. The Contractor shall submit proposed calibration sheets for various types of instruments for Engineer approval prior to the start of calibration. This sheet shall include but not be limited to date, instrument tag numbers, calibration data for the various procedures described herein, name of person performing the calibration, a listing of the published specified accuracy, permissible tolerance at each point of calibration, calibration reading as finally adjusted within tolerance, defect noted, corrective action required and corrections made.

4. If doubt exists as to the correct method for calibrating or checking the calibration of an instrument, the manufacturer's printed recommendations shall be used as an acceptable standard, subject to the approval of the Engineer.

5. Upon completion of calibration, devices calibrated hereunder shall not be subjected to sudden movements, accelerations, or shocks, and shall be installed in permanent protected positions not subject to moisture, dirt, and excessive temperature variations. Caution shall be exercised to prevent such devices from being subjected to overvoltages, incorrect voltages, overpressure or incorrect air. Damaged equipment shall be replaced and recalibrated at no cost to the Owner.

6. After completion of instrumentation installation, the instrumentation subcontractor shall perform a loop check. The Contractor shall submit final loop test results with all instruments listed in the loop. Loop test results shall be signed by all representatives involved for each loop test.

- END OF SECTION -

SECTION 17832 - MULTIPARAMETER ANALYZERS

PART 1 -- GENERAL

1.01 THE REQUIREMENT

A. The Contractor shall furnish, test, install and place in satisfactory operation multiparameter analyzers, with all spare parts, accessories, and appurtenances as herein specified and as shown on the Drawings.

1.02 RELATED WORK SPECIFIED ELSEWHERE

A. Control and Information System, General

B. Analytical Instruments, General

1.03 TOOLS, SUPPLIES AND SPARE PARTS

A. One sample conditioning kit, including a manual inline-strainer, pressure regulators, and polypropylene tubing, shall be provided for each analyzer as recommended by the analyzer manufacturer for a complete and operable system.

1.04 CALIBRATION CERTIFICATES

A. In accordance with the Section titled “Analytical Instruments, General” the instrumentation subcontractor shall provide a written calibration sheet to the Engineer for each instrument, certifying that it has been calibrated to its published specified accuracy.

B. After installation and prior to placing the instrument in service, the manufacturer’s representative shall calibrate the instrument per the manufacturer’s instructions. Submit to the Engineer a written calibration sheet documenting completion of the calibration.

PART 2 -- PRODUCTS

2.01 MULTIPARAMETER ANALYZER

A. Manufacturer, or Equal: The analyzer shall be a ChemScan UV-2150/S as manufactured by Applied Spectrometry Associates, inc.

B. Parameters: The analyzer shall automatically monitor the following parameters:

1. Free ammonia
2. Total Ammonia
3. Monochloramine
4. Total Chlorine

C. Range:

1. Free Ammonia 0.02 – 1.00 ppm as N

2. Total Ammonia 0.02 - 2.00 ppm as N

3. Monochloramine 0.01 - 8.0 ppm as Cl_2

4. Total Chlorine 0.01 - 8.0 ppm as Cl_2

D. Measurement Principal: The analyzer shall not use ion-selective electrodes for analysis. The analyzer shall not use toxic reagents for ammonia analysis including Nessler reagent, phenate or salycalate. Multiple wavelength spectrophotometric methods of analysis are allowed, provided that a minimum of 15 wavelengths are used for analysis. NSF listed chemicals such as bleach, hydroxide and potassium iodide may be used as reagents.

E. Features:

1. One analyzer shall be capable of detecting all designated parameters in samples from two sample locations.

2. Sample flow to the analyzer shall be from a sample pump supplied under a separate specification, providing pressure of 10 to 60 psi at the analyzer sample inlet.

3. Each sample line shall have a separate inlet into the analyzer, with sample flow through the inlet and the analyzer flow cell controlled by an internal sample manifold within the analyzer.

4. The analyzer shall have the capability to control sample analysis cycles and flush time through operator initiated commands in the analyzer keypad.

5. External sample manifolds and sample manifolds not furnished by the analyzer manufacturer are prohibited.

6. All designated parameters shall be completely analyzed for all designated parameters within eight minutes or less including the flush period for any sample line.

F. Zeroing and Cleaning:

1. The analyzer shall also provide for automatic zeroing using a distilled or de-ionized water standard and automatic cleaning using a cleaning solution recommended by the manufacturer.

2. Zeroing shall be performed automatically by the analyzer at intervals selected by the operator.

3. Cleaning shall be performed based on self-test set points measured during the zeroing cycle.

4. The analyzer shall contain an internal pump for the introduction of zeroing and cleaning solutions and a manifold to interrupt sample flow and replace it with a flow of zero standard or cleaning solution.

5. Gravity feed, manual introduction or external pumps for zeroing and cleaning are not acceptable.

6. The flow cell chamber shall be easily removed for cleaning without disconnection of power, sample lines, light source or detection optics.

7. The flow cell shall be thermally protected from condensation by use of inert gas between the internal sample windows and the external light entry or exit windows.

8. The contractor shall provide an open drain in close proximity to the analyzer.

G. Operator Interface: 2 x 20 LCD and 4 x 4 keypad

H. Output Type: 4-20mA (4 outputs, one for each analyzer)

I. Output During Cleaning: All outputs shall be held at the most recent analysis value until updated by a new analysis. Outputs shall also be held constant during auto zero and clean cycles.

J. Mounting: Installation shall be wall mounted to contractor furnished stainless steel unistrut in a sheltered location (as indicated on the Drawings), with ambient temperature not greater than 95 degree Fahrenheit (35 degree Celsius) nor less than 41 degree Fahrenheit (5 degree Celsius).

K. Approximate Dimensions: 40” x 20” x 10”

L. Main Enclosure Rating (Electronics, optics and operator interface display): NEMA 4.

M. Secondary Enclosure Rating (Flow cell, manifold, internal pump and reagent injection system: NEMA 3R.

N. Enclosure Finish Coating: Baked enamel on steel

O. Power: 120 VAC, 60 Hertz, 10 amps maximum.

P. Power Connection: Hard wired.

PART 3 -- EXECUTION

3.01 REQUIREMENTS

A. Refer to the Section entitled “Analytical Instruments, General”

- END OF SECTION -

SECTION 17910 - INSTRUMENT SCHEDULE

PART 1 -- GENERAL

1.01 THE REQUIREMENT

A. The Contractor shall furnish, test, install and place in satisfactory operation all instrumentation as herein specified and as shown on the Drawings.

1.02 RELATED WORK SPECIFIED ELSEWHERE

A. Section 17900 – Schedules and Control Descriptions

B. Section 17920 – Control System Input/Output Schedule

C. Section 17950 – Functional Control Descriptions

PART 2 -- INSTRUMENT SCHEDULE

Refer to Table 17910 – High Service Pump Station Instrument Schedule

080805BR

TABLE 17910
INSTRUMENT SCHEDULE

TAG	DESCRIPTION	SERVICE	RANGE/ SETPOINT	SIZE	SECTION	P&ID	NOTES
SECTION 17650 - Pressure Gauge							
PI-0651B	High Service Pump No. 1	Discharge Pressure	0-160 psig		17650	I-03	
PI-0651A	High Service Pump No. 1	Suction Pressure	-30 inHg - 30 psig		17650	I-03	
PI-0652B	High Service Pump No. 2	Discharge Pressure	0-160 psig		17650	I-03	
PI-0652A	High Service Pump No. 2	Suction Pressure	-30 inHg - 30 psig		17650	I-03	
PI-0653B	High Service Pump No. 3	Discharge Pressure	0-160 psig		17650	I-03	
PI-0653A	High Service Pump No. 3	Suction Pressure	-30 inHg - 30 psig		17650	I-03	
PI-0654B	High Service Pump No. 4	Discharge Pressure	0-160 psig		17650	I-03	
PI-0654A	High Service Pump No. 4	Suction Pressure	-30 inHg - 30 psig		17650	I-03	
SECTION 17675 - Pressure Switch							
PSH-0651	High Service Pump No. 1	Discharge Pressure: High	85 psig		17675	I-03	
PSH-0652	High Service Pump No. 2	Discharge Pressure: High	85 psig		17675	I-03	
PSH-0653	High Service Pump No. 3	Discharge Pressure: High	85 psig		17675	I-03	
PSH-0654	High Service Pump No. 4	Discharge Pressure: High	85 psig		17675	I-03	
PSL-0651A	High Service Pump No. 1	Suction Pressure: Low	1 psig		17675	I-03	
PSL-0652A	High Service Pump No. 2	Suction Pressure: Low	1 psig		17675	I-03	
PSL-0653A	High Service Pump No. 3	Suction Pressure: Low	1 psig		17675	I-03	
PSL-0654A	High Service Pump No. 4	Suction Pressure: Low	1 psig		17675	I-03	
SECTION 17701 - Magnetic Flow Transmitter/Sensor							
FE-0660	High Service Pump Station	Discharge Flow Rate	N/A	24"	17701	I-03	
FIT-0660	High Service Pump Station	Discharge Flow Rate	0-40 mgd	N/A	17701	I-03	
SECTION 17760 - Pressure Transmitter/Sensor							
LIT-0600	Ground Storage	Liquid Level	0-XX ft		17760	I-03	
PIT-0651A	High Service Pump No. 1	Suction Pressure	-30 inHg - 30 psig		17760	I-03	

TAG	DESCRIPTION	SERVICE	RANGE/ SETPOINT	SIZE	SECTION	P&ID	NOTES
PIT-0651B	High Service Pump No. 1	Discharge Pressure	0-160 psig		17760	I-03	
PIT-0652A	High Service Pump No. 2	Suction Pressure	-30 inHg - 30 psig		17760	I-03	
PIT-0652B	High Service Pump No. 2	Discharge Pressure	0-160 psig		17760	I-03	
PIT-0653B	High Service Pump No. 3	Discharge Pressure	0-160 psig		17760	I-03	
PIT-0653A	High Service Pump No. 3	Suction Pressure	-30 inHg - 30 psig		17760	I-03	
PIT-0654B	High Service Pump No. 4	Discharge Pressure	0-160 psig		17760	I-03	
PIT-0654A	High Service Pump No. 4	Suction Pressure	-30 inHg - 30 psig		17760	I-03	
PIT-0660	High Service Pump Station	Discharge Pressure	0-160 psig		17760	I-03	

SECTION 17832 - Multi-parameter Online Analyzer

AIT-0660A	Finished Water	Free Ammonia	0.02 - 1.00 ppm		17832	I-03	
AIT-0660B	Finished Water	Total Ammonia	0.02 - 2.00 ppm		17832	I-03	
AIT-0660C	Finished Water	Total Chlorine	0.02 - 8.00 ppm		17832	I-03	
AIT-0660D	Finished Water	Monochloramine	0.02 - 8.00 ppm		17832	I-03	

SECTION 17920 - CONTROL SYSTEM INPUT/OUTPUT SCHEDULE

PART 1 -- GENERAL

1.01 THE REQUIREMENT

A. The CONTRACTOR shall furnish, install, test, and place into satisfactory operation all PLC input and outputs as herein specified and as required for a complete functioning system.

1.02 RELATED WORK SPECIFIED ELSEWHERE

A. Section 17950 – Functional Control Descriptions: General

PART 2 -- CONTROL SYSTEM INPUT / OUTPUT SCHEDULE

2.01 REQUIREMENTS

A. Refer to Table 17920 following this section for a listing of the hardwired process I/O points and Table 17921 following this section for a listing of the digital (network based) I/O points.

PART 3 -- EXECUTION

3.01 INPUT/OUTPUT TYPES

A. Signals transmitted or received via PLC input/output cards are as follows:

DO – Discrete Output

DI – Discrete Input

AO – Analog Output

AI – Analog Input

B. Signals transmitted or received via digital network communications are as follows:

DDO – Digital Discrete Output

DDI – Digital Discrete Input

DAO – Digital Analog Output

DAI – Digital Analog Input

C. All PLC data shall be made available to the SCADA HMI via its data link using similar tag names and numbers to facilitate consistency between the PLC and HMI databases.

D. Refer to Section entitled “Functional Control Descriptions", Section 17950, for further description of input/output and HMI control interface requirements.

3.02 COMMON PLC INPUTS

A. The inputs listed in the table below shall be included for PLC-HSPS.

Tag ID	Description	Type	State/Range	Comments
	PLC Chassis 1 Redundant Power Supply 1	DI	Failure	
	PLC Chassis 1 Redundant Power Supply 2	DI	Failure	
	PLC Chassis 2 Redundant Power Supply 1	DI	Failure	
	PLC Chassis 2 Redundant Power Supply 1	DI	Failure	
	Loop DC Power Supply No. 1	DI	Failure	
	Loop DC Power Supply No. 2	DI	Failure	
	UPS Bypass Switch Position	DI	Status	
	UPS on Utility Power (Normal)	DI	Status	
	UPS on UPS Power (Utility Lost)	DI	Fault	
	UPS Common Fault	DI	Fault	
	UPS Low Battery	DI	Fault	
	Surge Protection System - Group x	DI	Warning	Provide for x groups (up to 28 devices/group)
	Surge Protection System - Group x	DI	Overload	Provide for x groups (up to 28 devices/group)
	Panel Door	DI	Intrusion	
	Panel Air Temperature	AI	32-140 deg F	

- END OF SECTION -

TABLE 17920
INPUT/OUTPUT SCHEDULE

TAG	DESCRIPTION	FUNCTION	STATE/ RANGE	PLC	I/O TYPE	P&ID	NOTES
ANALOG INPUTS							
AI-0660A	Finished Water	Free Ammonia	0.02 - 1.00 ppm	PLC-10	AI	I-03	
AI-0660B	Finished Water	Total Ammonia	0.02 - 2.00 ppm	PLC-10	AI	I-03	
AI-0660C	Finished Water	Total Chlorine	0.02 - 8.00 ppm	PLC-10	AI	I-03	
AI-0660D	Finished Water	Monochloramine	0.02 - 8.00 ppm	PLC-10	AI	I-03	
PI-0651B	High Service Pump No. 1	Discharge Pressure	0-160 psig	PLC-10	AI	I-03	
PI-0651A	High Service Pump No. 1	Suction Pressure	-30 inHg - 30 psi	PLC-10	AI	I-03	
SI-0651	High Service Pump No. 1 VFD (VFD-0651)	Speed Indication	0-100%	PLC-10	AI	I-03	
PI-0652B	High Service Pump No. 2	Discharge Pressure	0-160 psig	PLC-10	AI	I-03	
PI-0652A	High Service Pump No. 2	Suction Pressure	-30 inHg - 30 psi	PLC-10	AI	I-03	
SI-0652	High Service Pump No. 2 VFD (VFD-0652)	Speed Indication	0-100%	PLC-10	AI	I-03	
PI-0653B	High Service Pump No. 3	Discharge Pressure	0-160 psig	PLC-10	AI	I-03	
PI-0653A	High Service Pump No. 3	Suction Pressure	-30 inHg - 30 psi	PLC-10	AI	I-03	
SI-0653	High Service Pump No. 3 VFD (VFD-0653)	Speed Indication	0-100%	PLC-10	AI	I-03	
PI-0654B	High Service Pump No. 4	Discharge Pressure	0-160 psig	PLC-10	AI	I-03	
PI-0654A	High Service Pump No. 4	Suction Pressure	-30 inHg - 30 psi	PLC-10	AI	I-03	
SI-0654	High Service Pump No. 4 VFD (VFD-0654)	Speed Indication	0-100%	PLC-10	AI	I-03	
FI-0660	High Service Pump Station	Discharge Flow	0-40 mgd	PLC-10	AI	I-03	
PI-0660	High Service Pump Station	Discharge Pressure	0-160 psig	PLC-10	AI	I-03	
LI-0600	Storage Tank Level	LEVEL	0-XX FT	PLC-10	AI	I-03	
ANALOG OUTPUTS							
SC-0651	High Service Pump No. 1 VFD (VFD-0651)	Speed Command	0-100%	PLC-10	AO	I-03	
SC-0652	High Service Pump No. 2 VFD (VFD-0652)	Speed Command	0-100%	PLC-10	AO	I-03	
SC-0653	High Service Pump No. 3 VFD (VFD-0653)	Speed Command	0-100%	PLC-10	AO	I-03	
SC-0654	High Service Pump No. 4 VFD (VFD-0654)	Speed Command	0-100%	PLC-10	AO	I-03	

TAG	DESCRIPTION	FUNCTION	STATE/ RANGE	PLC	I/O TYPE	P&ID	NOTES
DISCRETE INPUTS							
TAH-0651	High Service Pump No. 1 VFD (VFD-0651)	Motor Overtemp	Alarm	PLC-10	DI	I-03	
YLX-0651	High Service Pump No. 1 VFD (VFD-0651)	Ready	Status	PLC-10	DI	I-03	
PAH-0651	High Service Pump No. 1 VFD (VFD-0651)	Discharge Pressure High	Alarm	PLC-10	DI	I-03	
YA-0651	High Service Pump No. 1 VFD (VFD-0651)	Fault	Alarm	PLC-10	DI	I-03	
YLR-0651	High Service Pump No. 1 VFD (VFD-0651)	Running	Status	PLC-10	DI	I-03	
YL-0651	High Service Pump No. 1 VFD (VFD-0651)	In Remote	Status	PLC-10	DI	I-03	
PAL-0651	High Service Pump No. 1 VFD (VFD-0651)	Suction Pressure Low	Alarm	PLC-10	DI	I-03	
YL-0652	High Service Pump No. 2 VFD (VFD-0652)	In Remote	Status	PLC-10	DI	I-03	
YLR-0652	High Service Pump No. 2 VFD (VFD-0652)	Running	Status	PLC-10	DI	I-03	
YA-0652	High Service Pump No. 2 VFD (VFD-0652)	Fault	Alarm	PLC-10	DI	I-03	
PAH-0652	High Service Pump No. 2 VFD (VFD-0652)	Discharge Pressure High	Alarm	PLC-10	DI	I-03	
YLX-0652	High Service Pump No. 2 VFD (VFD-0652)	Ready	Status	PLC-10	DI	I-03	
TAH-0652	High Service Pump No. 2 VFD (VFD-0652)	Motor Overtemp	Alarm	PLC-10	DI	I-03	
PAL-0652	High Service Pump No. 2 VFD (VFD-0652)	Suction Pressure Low	Alarm	PLC-10	DI	I-03	
YL-0653	High Service Pump No. 3 VFD (VFD-0653)	In Remote	Status	PLC-10	DI	I-03	
YLX-0653	High Service Pump No. 3 VFD (VFD-0653)	Ready	Status	PLC-10	DI	I-03	
TAH-0653	High Service Pump No. 3 VFD (VFD-0653)	Motor Overtemp	Alarm	PLC-10	DI	I-03	
YLR-0653	High Service Pump No. 3 VFD (VFD-0653)	Running	Status	PLC-10	DI	I-03	
YA-0653	High Service Pump No. 3 VFD (VFD-0653)	Fault	Alarm	PLC-10	DI	I-03	
PAH-0653	High Service Pump No. 3 VFD (VFD-0653)	Discharge Pressure High	Alarm	PLC-10	DI	I-03	
PAL-0653	High Service Pump No. 3 VFD (VFD-0653)	Suction Pressure Low	Alarm	PLC-10	DI	I-03	
YL-0654	High Service Pump No. 4 VFD (VFD-0654)	In Remote	Status	PLC-10	DI	I-03	
YLX-0654	High Service Pump No. 4 VFD (VFD-0654)	Ready	Status	PLC-10	DI	I-03	
TAH-0654	High Service Pump No. 4 VFD (VFD-0654)	Motor Overtemp	Alarm	PLC-10	DI	I-03	
YLR-0654	High Service Pump No. 4 VFD (VFD-0654)	Running	Status	PLC-10	DI	I-03	
YA-0654	High Service Pump No. 4 VFD (VFD-0654)	Fault	Alarm	PLC-10	DI	I-03	
PAH-0654	High Service Pump No. 4 VFD (VFD-0654)	Discharge Pressure High	Alarm	PLC-10	DI	I-03	

TAG	DESCRIPTION	FUNCTION	STATE/ RANGE	PLC	I/O TYPE	P&ID	NOTES
PAL-0654	High Service Pump No. 4 VFD (VFD-0654)	Suction Pressure Low	Alarm	PLC-10	DI	I-03	
ZIC-0864	SWG-MF-2 Breaker (E1)	Closed	Status	PLC-2	DI	I-03	
ZIO-0864	SWG-MF-2 Breaker (E1)	Opened	Status	PLC-2	DI	I-03	
XA-0864	SWG-MF-2 Breaker (E1)	Fault	Alarm	PLC-2	DI	I-03	
XA-0865	SWG-MF-2 Breaker (E2)	Fault	Alarm	PLC-2	DI	I-03	
ZIO-0865	SWG-MF-2 Breaker (E2)	Opened	Status	PLC-2	DI	I-03	
ZIC-0865	SWG-MF-2 Breaker (E2)	Closed	Status	PLC-2	DI	I-03	
ZIC-0866	SWG-MF-2 Breaker (E3)	Closed	Status	PLC-2	DI	I-03	
XA-0866	SWG-MF-2 Breaker (E3)	Fault	Alarm	PLC-2	DI	I-03	
ZIO-0866	SWG-MF-2 Breaker (E3)	Opened	Status	PLC-2	DI	I-03	
ZIO-0863	SWG-MF-2 Main Breaker (E4)	Opened	Status	PLC-2	DI	I-03	
ZIC-0863	SWG-MF-2 Main Breaker (E4)	Closed	Status	PLC-2	DI	I-03	
XA-0863	SWG-MF-2 Main Breaker (E4)	Fault	Alarm	PLC-2	DI	I-03	
ZIC-0863	SWG-MF-2 Main Breaker (F3)	Closed	Status	PLC-2	DI	I-03	
ZIO-0863	SWG-MF-2 Main Breaker (F3)	Opened	Status	PLC-2	DI	I-03	
XA-0863	SWG-MF-2 Main Breaker (F3)	Fault	Alarm	PLC-2	DI	I-03	
XA-0862	SWG-MF-2 Main Breaker (G3)	Fault	Alarm	PLC-2	DI	I-03	
ZIO-0862	SWG-MF-2 Main Breaker (G3)	Opened	Status	PLC-2	DI	I-03	
ZIC-0862	SWG-MF-2 Main Breaker (G3)	Closed	Status	PLC-2	DI	I-03	

DISCRETE OUTPUTS

YCR-0651	High Service Pump No. 1 VFD (VFD-0651)	Start Stop	Control	PLC-10	DO	I-03	
YCX-0651	High Service Pump No. 1 VFD (VFD-0651)	VFD Remote Reset	Control	PLC-10	DO	I-03	
YCR-0652	High Service Pump No. 2 VFD (VFD-0652)	Start Stop	Control	PLC-10	DO	I-03	
YCX-0652	High Service Pump No. 2 VFD (VFD-0652)	VFD Remote Reset	Control	PLC-10	DO	I-03	
YCR-0653	High Service Pump No. 3 VFD (VFD-0653)	Start Stop	Control	PLC-10	DO	I-03	
YCX-0653	High Service Pump No. 3 VFD (VFD-0653)	VFD Remote Reset	Control	PLC-10	DO	I-03	
YCR-0654	High Service Pump No. 4 VFD (VFD-0654)	Start Stop	Control	PLC-10	DO	I-03	
YCX-0654	High Service Pump No. 4 VFD (VFD-0654)	VFD Remote Reset	Control	PLC-10	DO	I-03	

TABLE 17921
DIGITAL INPUT/OUTPUT SCHEDULE

TAG	SERVICE DESCRIPTION	FUNCTION	PLC	TYPE	P&ID	NOTES
DIGITAL ANALOG INPUTS (Network Communication: Ethernet/IP, Modbus TCP, etc.)						
EI-0870	SWBD-HSPS Power Monitor 1	Voltage Volts Phase C	PLC-10	DAI	I-03	PLC-10/SCADAHMI << Ethernet/IP Data Link
EI-0870	SWBD-HSPS Power Monitor 1	Voltage Volts Phase A	PLC-10	DAI	I-03	PLC-10/SCADAHMI << Ethernet/IP Data Link
EI-0870	SWBD-HSPS Power Monitor 1	Voltage Volts Phase B	PLC-10	DAI	I-03	PLC-10/SCADAHMI << Ethernet/IP Data Link
II-0870	SWBD-HSPS Power Monitor 1	Current Amps Phase C	PLC-10	DAI	I-03	PLC-10/SCADAHMI << Ethernet/IP Data Link
II-0870	SWBD-HSPS Power Monitor 1	Current Amps Phase A	PLC-10	DAI	I-03	PLC-10/SCADAHMI << Ethernet/IP Data Link
II-0870	SWBD-HSPS Power Monitor 1	Current Amps Phase B	PLC-10	DAI	I-03	PLC-10/SCADAHMI << Ethernet/IP Data Link
JI-0870	SWBD-HSPS Power Monitor 1	Power kVAR	PLC-10	DAI	I-03	PLC-10/SCADAHMI << Ethernet/IP Data Link
JI-0870	SWBD-HSPS Power Monitor 1	Power kW	PLC-10	DAI	I-03	PLC-10/SCADAHMI << Ethernet/IP Data Link
JI-0870	SWBD-HSPS Power Monitor 1	Power kVA	PLC-10	DAI	I-03	PLC-10/SCADAHMI << Ethernet/IP Data Link
EI-0871	SWBD-HSPS Power Monitor 2	Voltage Volts Phase C	PLC-10	DAI	I-03	PLC-10/SCADAHMI << Ethernet/IP Data Link
EI-0871	SWBD-HSPS Power Monitor 2	Voltage Volts Phase A	PLC-10	DAI	I-03	PLC-10/SCADAHMI << Ethernet/IP Data Link
EI-0871	SWBD-HSPS Power Monitor 2	Voltage Volts Phase B	PLC-10	DAI	I-03	PLC-10/SCADAHMI << Ethernet/IP Data Link
II-0871	SWBD-HSPS Power Monitor 2	Current Amps Phase C	PLC-10	DAI	I-03	PLC-10/SCADAHMI << Ethernet/IP Data Link
II-0871	SWBD-HSPS Power Monitor 2	Current Amps Phase A	PLC-10	DAI	I-03	PLC-10/SCADAHMI << Ethernet/IP Data Link
II-0871	SWBD-HSPS Power Monitor 2	Current Amps Phase B	PLC-10	DAI	I-03	PLC-10/SCADAHMI << Ethernet/IP Data Link
JI-0871	SWBD-HSPS Power Monitor 2	Power kVAR	PLC-10	DAI	I-03	PLC-10/SCADAHMI << Ethernet/IP Data Link
JI-0871	SWBD-HSPS Power Monitor 2	Power kW	PLC-10	DAI	I-03	PLC-10/SCADAHMI << Ethernet/IP Data Link
JI-0871	SWBD-HSPS Power Monitor 2	Power kVA	PLC-10	DAI	I-03	PLC-10/SCADAHMI << Ethernet/IP Data Link
EI-0860	SWG-MF-2 Power Monitor 1	Voltage Volts Phase A	PLC-2	DAI	I-03	PLC-2/SCADAHMI << Ethernet/IP Data Link
EI-0860	SWG-MF-2 Power Monitor 1	Voltage Volts Phase B	PLC-2	DAI	I-03	PLC-2/SCADAHMI << Ethernet/IP Data Link
EI-0860	SWG-MF-2 Power Monitor 1	Voltage Volts Phase C	PLC-2	DAI	I-03	PLC-2/SCADAHMI << Ethernet/IP Data Link
II-0860	SWG-MF-2 Power Monitor 1	Current Amps Phase A	PLC-2	DAI	I-03	PLC-2/SCADAHMI << Ethernet/IP Data Link
II-0860	SWG-MF-2 Power Monitor 1	Current Amps Phase C	PLC-2	DAI	I-03	PLC-2/SCADAHMI << Ethernet/IP Data Link
II-0860	SWG-MF-2 Power Monitor 1	Current Amps Phase B	PLC-2	DAI	I-03	PLC-2/SCADAHMI << Ethernet/IP Data Link
JI-0860	SWG-MF-2 Power Monitor 1	Power kW	PLC-2	DAI	I-03	PLC-2/SCADAHMI << Ethernet/IP Data Link

TAG	SERVICE DESCRIPTION	FUNCTION	PLC	TYPE	P&ID	NOTES
JI-0860	SWG-MF-2 Power Monitor 1	Power kVA	PLC-2	DAI	I-03	PLC-2/SCADAHMI << Ethernet/IP Data Link
JI-0860	SWG-MF-2 Power Monitor 1	Power kVAR	PLC-2	DAI	I-03	PLC-2/SCADAHMI << Ethernet/IP Data Link
EI-0861	SWG-MF-2 Power Monitor 2	Voltage Volts Phase C	PLC-2	DAI	I-03	PLC-2/SCADAHMI << Ethernet/IP Data Link
EI-0861	SWG-MF-2 Power Monitor 2	Voltage Volts Phase A	PLC-2	DAI	I-03	PLC-2/SCADAHMI << Ethernet/IP Data Link
EI-0861	SWG-MF-2 Power Monitor 2	Voltage Volts Phase B	PLC-2	DAI	I-03	PLC-2/SCADAHMI << Ethernet/IP Data Link
II-0861	SWG-MF-2 Power Monitor 2	Current Amps Phase C	PLC-2	DAI	I-03	PLC-2/SCADAHMI << Ethernet/IP Data Link
II-0861	SWG-MF-2 Power Monitor 2	Current Amps Phase B	PLC-2	DAI	I-03	PLC-2/SCADAHMI << Ethernet/IP Data Link
II-0861	SWG-MF-2 Power Monitor 2	Current Amps Phase A	PLC-2	DAI	I-03	PLC-2/SCADAHMI << Ethernet/IP Data Link
JI-0861	SWG-MF-2 Power Monitor 2	Power kVAR	PLC-2	DAI	I-03	PLC-2/SCADAHMI << Ethernet/IP Data Link
JI-0861	SWG-MF-2 Power Monitor 2	Power kVA	PLC-2	DAI	I-03	PLC-2/SCADAHMI << Ethernet/IP Data Link
JI-0861	SWG-MF-2 Power Monitor 2	Power kW	PLC-2	DAI	I-03	PLC-2/SCADAHMI << Ethernet/IP Data Link

SECTION 17950 - FUNCTIONAL CONTROL DESCRIPTIONS

PART 1 -- GENERAL

1.01 THE REQUIREMENT

A. The Contractor shall furnish, test, install and place in satisfactory operation all equipment as herein specified and as shown on the Drawings. THE CONTRACTOR SHALL BE RESPONSIBLE FOR FURNISHING COMPLETE FUNCTIONING SYSTEMS AS DESCRIBED HEREIN.

B. Together with the control system input/output schedule, the equipment specifications (including functional descriptions for local equipment control panels), and the Drawings, the functional control descriptions describe the required operation, monitoring, and control of the facilities included in this Contract.

C. THE FUNCTIONAL DESCRIPTIONS CONTAIN REQUIREMENTS FOR FURNISHING AND INSTALLING LABOR AND MATERIALS THAT MAY NOT APPEAR ELSEWHERE IN THE CONTRACT DOCUMENTS.

D. All equipment and services required in equipment local control panels provided to implement the monitoring and control functions described herein or in the process input/output schedules shall be provided by the Contractor through individual equipment suppliers.

E. Unless specifically stated otherwise, all interconnected wiring between all instruments, panels, controls, and other devices listed in the functional descriptions as required to provide all functions specified herein shall be furnished by the Electrical Contractor under Division 16. The Electrical Contractor shall provide all cable and conduit required to carry all signals listed in the process input/output schedules. Special cables that are required for interconnection between sensors or probes and transmitters or signal conditioners shall be furnished with the instrumentation devices by the equipment supplier.

1.02 RELATED WORK SPECIFIED ELSEWHERE

A. Section 01520 – Maintenance of Utility Operations During Construction

B. Section 17900 – Schedules and Control Descriptions, General

C. Section 17910 – Instrument Schedule

D. Section 17920 – Control System Input/Output Schedule

PART 2 -- FUNCTIONAL CONTROL DESCRIPTIONS, GENERAL

2.01 DEFINITIONS

A. RUNNING status signals shall be from auxiliary contacts provided with the motor control equipment (i.e., starter, VFD, SCR, etc.).

B. AUTO status signals shall be defined as HAND-OFF-AUTO switch in the AUTO position or process control system in AUTO (versus MANUAL).

C. FAIL status signals shall be defined as motor overload and/or any other shut down mode such as overtorque, overtemperature, low oil pressure, high vibration, etc.

D. READY status signal shall be defined as all conditions, including equipment control power, satisfied to permit remote control of the equipment.

2.02 CONVENTIONS

A. Operator workstation graphic display symbols and indicator lights on all MCC's, control panels, starter enclosures, etc. shall conform to the following color convention:

Condition	Color
Running/On/Open	Red
Auto/Ready	White
Stopped/Off/Closed	Green
Fail/Alarm	Amber
Generic Status	Blue or White

2.03 PROCESS CONTROL

A. Where set-points, operating limits, and other control settings are provided by the functional descriptions, these settings shall be initial settings only and shall be used for assistance in the initial startup of the plant. All such settings shall be fully adjustable and, based on actual operating conditions, the instrumentation subcontractor shall make all necessary adjustments to provide smooth, stable operation at no additional cost to the Owner.

B. Provision shall be made in PLC logic to suppress nuisance alarms and control actions by the following means:

For alarms and control actions derived from analog input signals, use adjustable time delays and deadbands.

1. Initial settings for time delays shall be 10 seconds (range 0-120 seconds). Initial settings for deadbands shall be 5% of span (range 0-100%).

2. Equipment that is started or stopped manually by the operator shall start or stop immediately, with no time delay.

C. All set-point control shall be by PID control algorithms. Where only proportional control is specified, tuning constants shall be used to reduce the Integral and Derivative functions to zero. All set-points, sequence times, sequence orders, dead bands, PID tuning parameters, PLC delay timers, variable speed operating range limits, and similar control constants shall be accessible and alterable from the operator workstations.

D. Unless otherwise specified, all equipment shall automatically restart after a power failure utilizing adjustable start delay timers in PLC control logic. Unless otherwise specified, all PLC control strategies shall be based upon automatic restart after a power failure and shall return to a normal control mode upon restoration of power.

E. The PLC shall be capable of receiving initial run-time values for existing and proposed equipment. Initial run-time shall not automatically be assumed to be zero.

F. Equipment failure shall be generated through the PLC for any drive, motor, etc. for which a command has been issued, but for which the PLC is not receiving a confirming status signal (e.g., start command with no run feedback). The failure shall be logged.

G. Instrument failure shall be generated via the operator work stations for any instrument which is generating a signal which is less than 4 mA or greater than 20 mA.

H. A control program that controls multiple pieces of equipment shall not be prevented from running because not all of the equipment is in AUTO. If equipment within an equipment chain is required to be running for program operation and it is running in HAND or MANUAL, then the program shall run and control the other equipment that is in AUTO.

I. All PLC wait states (internal time delays, etc.) after an operator action shall be displayed on the operator workstation.

PART 3 -- FUNCTIONAL CONTROL DESCRIPTIONS

3.01 CONTROL STRATEGIES INDEX

Sub Section	Description	PLC
3.02	High Service Pumps	PLC-10

3.01 HIGH SERVICE PUMPS (PLC-10)

A. General

1. The high service pumps at the City of Hallandale Beach Water Treatment Plant (WTP) pump water from the water storage tank system into the City's water distribution system. The general control strategy for all the high service pumps is to maintain a relatively constant distribution system pressure.

2. The high service pump station is equipped with four variable speed pumps, with the following equipment identification numbers:

Pump No.	Equipment ID No.
Pump No. 1	HSP-0651
Pump No. 2	HSP-0652
Pump No. 3	HSP-0653
Pump No. 4	HSP-0654

3. VFD Keypad - when a high service pump variable frequency drive (VFD) is set to "Local" from the VFD keypad VFD start, stop and speed adjustment shall be controlled from the keypad. When the VFD is set to "Remote" VFD control shall be from PLC-10.

4. Master Control Panel - A High Service Pump Station Master Control Panel, MCP-HSPS, equipped with a programmable logic controller, PLC-10, and an operator interface unit, OIU-10, shall monitor and control the pump station.

5. SCADA HMI and OIU-10 - all set-points and control/monitoring functions described herein are to be adjustable on the OIU and WWTP SCADA computer workstation HMI screens. The OIU shall be a standalone platform that is not dependent on WTP SCADA system. However, the WTP SCADA HMI screens shall be configured with the same monitoring and control functions as the OIU HMI screens, and both the OIU and SCADA HMI screens shall be collectively referred to as the "HMI" (human-machine interface).

B. Manual Mode

1. When a pump is in remote, the operator may select automatic or manual mode on the HMI. In manual mode, the operator controls the pump by clicking start and stop icons on the HMI. Additionally, the operator shall be able to control the speed of the pump via the HMI by adjusting a "percent speed" set-point.

C. Automatic Mode: When the pumps are in automatic, they shall speed up and slow down to maintain an adjustable pump station discharge pressure set-point.

D. Pump Availability

1. A pump shall be considered unavailable if any of the following conditions are true:

   a. Pump fault is active
   b. Pump is not in automatic mode

2. If a pump is not available, adjustable set-points for the unavailable pump shall be disabled on the HMI.

E. Manual Mode – Lead/Lag1/Lag2/Standby Duty Selection

1. In manual mode, each pump shall be assigned lead, lag1, lag2, and standby duty by entering the designation in the HMI by entering a check box in table, as exemplified below.

Pump	Lead	Lag1	Lag2	Standby
No. 1 (HSP-0651)	X			
No. 2 (HSP-0652)		X		
No. 3 (HSP-0653)			X	
No. 4 (HSP-0654)				X

2. Manual adjustment of duty selections for an unavailable pump shall be disabled on the HMI.

F. Automatic Mode – Lead/Lag1/Lag2/Standby Duty Selection

1. To determine the order in which pumps start and stop in automatic mode, each pump shall be assigned lead, lag1, lag2, and standby duty by the PLC.

2. When duty selection is automatically alternated, the pump with the longest runtime will be assigned the standby duty and the pump with the shortest runtime shall be assigned the lead duty. To avoid disruption of operations, the duty assignments shall only be automatically switched when all pumps are stopped.

3. If a pump becomes unavailable, the standby pump shall be assigned to that pumps duty selection.

G. Automatic Mode - Distribution Pressure Control

1. Lead Pump: In automatic mode, the lead pump shall start and stop based on the pump station discharge pressure set-point (P1) and the pump station discharge pressure measurement (PIT-0660). When the pressure remains below the set-point minus a deadband ($P1\text{-}DP1_{start}$) for a time delay, the lead pump shall start. The PLC shall modulate the lead pump speed to maintain the pressure set-point (P1) using a PID control loop.

2. Lag1 Pump: In automatic mode, the lag1 pump shall start if the lead pump is running above 98% speed and the pump station discharge pressure (PIT-0660) remains below the pump station pressure set-point minus a deadband ($P1\text{-}DP2_{start}$) for a time delay. The PLC shall modulate the operating pumps at the same speed to maintain the pressure set-point (P1) using a PID control loop. When the pressure rises above the pump station pressure set-point plus a deadband ($P1+DP2_{stop}$) for a time delay, the Lag1 pump shall be stopped.

3. Lag2 Pump: In automatic mode, the lag2 pump shall start when the lag1 pump remains above 98% speed and the pump station discharge pressure (PIT-0660) remains below the pump station pressure set-point minus a deadband ($P1\text{-}DP3_{start}$) for a time delay. The PLC shall modulate the operating pumps at the same speed to maintain the pressure set-point (P1) using a PID control loop. When the pressure rises above the pump station pressure set-point plus a deadband ($P1+DP3_{stop}$) for a time delay, the Lag2 pump shall be stopped.

H. Speed Clamps:

1. Pumps shall be provided with speed clamps within the PLC depending on the number of pumps in operation. These speed clamps shall be adjustable from the HMI. The speed clamps initial set-points shall be as follows:

No. Pumps Running	**1**	**2**	**3**	**4**
Max Speed, %	100	100	100	100
Min Speed, %	70	70	70	70

2. With two or more pumps in operation, if the pump speed is reduced to its minimum operating speed (for an adjustable time delay, initially set at 300 seconds), the PLC shall stop the lead pump.

I. Low Tank Level Alarm

1. Active an alarm on the HMI if the water tank level (LIT-0600) is less than the "Storage tank low-low water level" set-point (D1) for 15 seconds (adjustable time delay). The alarm shall deactivate if the tank level rises above the "Low Water Level Alarm Off" set-point (D2), or if the operator manually resets the alarm on the HMI.

J. Suction/Discharge Pressure Shutdown

1. High Discharge Pressure Shutdown: If the discharge pressure measured at a pump by the pressure transmitter is greater than the high discharge pressure set-point (P2) for an adjustable time delay shutdown that pump and indicate an alarm on the HMI. A manual reset on the HMI shall be required to unlatch the alarm.

2. Low Suction Pressure Shutdown: If the suction pressure measured at a pump measured by the pressure transmitter is less than the low pressure set-point (P3) for an adjustable time delay shutdown that pump and indicate an alarm on the HMI. A manual reset on the HMI shall be required to unlatch the alarm.

K. Total Dynamic Head

1. Each pump is equipped with pressure indicating transmitters on the suction and discharge. The PLC shall continuously calculate the total dynamic head (TDH) across each pump as follows:

Pump	Suction Pressure		Discharge Pressure		TDH Calculation
	Transmitter	Value	Transmitter	Value	
Pump No. 1	PIT-0651A	SP1	PIT-0651B	DP1	TDH1 = DP1 – SP1
Pump No. 2	PIT-0652A	SP2	PIT-0652B	DP2	TDH2 = DP2 – SP2
Pump No. 3	PIT-0653A	SP3	PIT-0653B	DP3	TDH3 = DP3 – SP3
Pump No. 4	PIT-0654A	SP4	PIT-0654B	DP4	TDH4 = DP4 – SP4

2. The TDH shall be displayed on the HMI.

L. Set-point Initial Values and Validation

1. The PLC shall use the following initial values and check that set-points are within the following limits before accepting a set-point modification:

Set-point (SP)	Initial SP Value	Minimum	Maximum	Initial Time Delay*
Pump Station Discharge Pressure Set-point (P1)	70 psi	45 psi	100 psi	n/a
High Discharge Pressure (P2)	80 psi	60 psi	100 psi	5 sec
Low Suction Pressure (P3)	3.5 psi	0.40 psi	20 psi	5 sec
Lead Start Pressure Deadband ($DP1_{start}$)	2.0 psi	1.0 psi	20.0 psi	10 sec
Lag1 Start Pressure Deadband ($DP2_{start}$)	2.0 psi	1.0 psi	20.0 psi	10 sec
Lag1 Stop Pressure Deadband ($DP2_{stop}$)	5.0 psi	1.0 psi	20.0 psi	30 sec
Lag2 Start Pressure Deadband ($DP3_{start}$)	2.0 psi	1.0 psi	20.0 psi	10 sec
Lag2 Stop Pressure Deadband ($DP3_{stop}$)	5.0 psi	1.0 psi	20.0 psi	30 sec
Pump Station Low Flow Alarm SP (Q1)	**TBD	**TBD	**TBD	30 sec
Pump Station High Flow Alarm SP (Q2)	**TBD	**TBD	**TBD	30 sec
Storage tank low-low water level (D1)	10.0 ft	1.0 ft	35.0 ft	15 sec
Low water level alarm off (D2)	15.0 ft	1.0 ft	35.0 ft	15 sec

* All time delays shall be adjustable from 0 to 120 seconds.
** TBD - To be determined during startup.

2. If the operator enters a set-point that is outside these limits, the PLC shall reject the requested set-point modification and shall continue to use the previous set-point. The following warning message shall appear on the HMI:

   a. "Invalid Set-point. Set-point shall be within the following range: xx-yy.", where xx-yy indicates the appropriate range and units of the set-point.

M. Pump Shutdown Hardwired Interlocks

1. When the pump is running in local or remote, the following conditions will stop the pump via hardwired inputs to the VFD and will require a manual reset by the operator at the VFD control panel or on the HMI (if the pump is in remote):

   a. Low pump suction pressure switch (PSL-0651A, 0652A, 0653A, 0654A; respectively) indicates low pressure for 5 seconds.

   b. High pump discharge pressure switch (PSH-0651B, 0652B, 0653B, 0654B; respectively) indicates high pressure for 5 seconds.

   c. VFD fault

   d. Refer to the Electrical Drawings for all hardwired interlocks.

N. Local Control (at VFD)

1. Refer to the Electrical Drawings for all local controls.

O. At a minimum, provide the following on the HMI (at Pump Station OIU and WTP SCADA HMI):

1. Local/Remote indication
2. Auto/Manual selection
3. Start command (manual)
4. Stop command (manual)
5. Pump running indication
6. Pump off indication
7. Pump ready
8. Power on indication
9. Speed adjustment (manual)
10. Speed indication
11. Fault reset command (momentary output)
12. Pump common fault alarm
13. Storage tank low-low water level set-point (D1)
14. Low water level alarm off (D2)
15. Power failure restart timers (outage time, restart time)
16. Distribution flow rate indication
17. Distribution system pressure indication
18. Pump suction side pressure
19. Pump discharge side pressure
20. Pump total dynamic head
21. Pump station low flow alarm set-point (Q1)
22. Pump station high flow alarm set-point (Q2)
23. Pressure set-points (P1, P2, P3)
24. Time delays (all)
25. Distribution system low/high pressure alarms
26. Distribution system low/high pressure alarm set-points
27. Distribution system low/high pressure alarm time delays and deadbands
28. Pump discharge high pressure alarms, alarm set-points, alarm time delays and deadbands
29. Pump suction low pressure alarms, alarm set-points, alarm time delays and deadbands
30. Pump runtimes
31. Pump runtime reset command
32. Pump runtime value entry
33. Pump lead/lag1/lag2/standby status
34. Pump alternation (lead/lag) auto/manual selection

35. Pump lead/lag1/lag2/standby manual selection
36. Pump failed-to-start alarm
37. Pump failed-to-start time delay
38. All miscellaneous indications and controls (refer to Drawings and I/O schedule)

P. Allow Pump to Start Validation

1. When in either manual or automatic modes, the PLC shall not allow the pumps to run if the following conditions are true:

    a. Water level in the water tanks (as measured by LIT-0600) is below the “Storage Tank Low-Low Water Level” set-point (D1) for an adjustable time delay, initially set at 15 seconds.

- END OF SECTION -

City of Hallandale Beach
Water Treatment Plant
High Service Pump Replacement

Attachment A
Lead Paint Survey Report

The attached report is provided for informational purposes with the Contract Documents. The attached report is not a part of the Contract Documents. The City of Hallandale Beach and Hazen and Sawyer make no guarantee, either expressed or implied, as to its accuracy or completeness.

ENVIRONMENTAL SERVICES, LLC

LEAD PAINT SURVEY REPORT

FOR

HIGH SERICE PUMP STATION REPLACEMENT PROJECT
HALLANDALE BEACH WATER TREATMENT PLANT
630 NW 2ND STREET
HALLANDALE BEACH, FL 33009

Prepared for

HAZEN AND SAWYER
4000 HOLLYWOOD BOULEVARD, SUITE 750N
HOLLYWOOD, FLORIDA 33021

ATTENTION: MR. GEORGE A. BROWN

Prepared by

Hiram A. Aguiar
EPA Lead Risk Assessor Certificate #FL-R-9781-2

EE&G Environmental Services, LLC
5751 Miami Lakes Drive
Miami Lakes, Florida 33014
(305) 374-8300
www.eeandg.com

September 7, 2017
EE&G Project No. 2017-2532 LBP

CONTENTS

Section **Page**

1.0 - INTRODUCTION 1

1.1 INTRODUCTION 1
1.2 PROPERTY DESCRIPTION 1
1.3 OWNER INFORMATION 1

2.0 - METHODS AND LIMITATIONS 2

2.1 LABORATORY METHODS 2
2.2 LIMITATIONS 2

3.0 – TESTING RESULTS 4

3.1 FINDINGS 4

4.0 - RECOMMENDATIONS 5

TABLES

TABLE 1. LBP Testing Results 3

APPENDICES

APPENDIX A Flame A.A.S. Results
APPENDIX B Figures
APPENDIX C Photographs
APPENDIX D Certificates

SECTION 1.0

INTRODUCTION

1.1 INTRODUCTION

At the request of Hazen and Sawyer (hereafter referred to as the Client), EE&G Environmental Services, LLC (EE&G) conducted limited Lead-Based Paint (LBP) testing of the interior suspect painted components as per the provided plans of the high service pump replacement project (subject area), located at 630 NW 2nd Street, Hallandale Beach, Florida on August 23, 2017 by Environmental Protection Agency (EPA) Certified Lead-Based Paint Risk Assessor Hiram Aguiar of EE&G. EE&G's scope of work for this project consisted of testing the interior suspect painted components for lead concentrations in these building components.

1.2 PROPERTY DESCRIPTION

The subject facility is a water treatment plant located in Hallandale Beach, Florida. The one-story high service pump building was observed to be constructed of concrete and metal on concrete foundation. The subject equipment and plumbing components were observed to be painted metal. The interior walls, floors, and ceiling were observed to be painted and non-painted concrete. Based on plans provided by the Client (see attached), and with the assistance and direction of the client representatives, EE&G determined the various surfaces to be impacted and the equipment to be replaced.

1.3 OWNER INFORMATION

CITY OF HALLANDALE BEACH
630 NW 2ND STREET
HALLANDALE BEACH, FL 33009

SECTION 2.0

METHODS AND LIMITATIONS

2.1 METHODS

The interior suspect painted areas as per the provided plans were visually inspected and representative paint chip samples were collected from surfaces based on component type and substrate in the interior areas of the subject area. Based on the inspection, the following painted surfaces were identified as suspect components and therefore were tested:

- Paint on diesel engine.
- Paint on emergency generator.
- Paint on diesel engine over-flow barrier.
- Paint on emergency generator over-flow barrier.
- Paint on emergency generator support beam.
- Paint on emergency generator metal duct.
- Paint on interior wall.
- Paint on service pumps 1-5.
- Paint on interior ceiling.
- Paint on transformer.

The sampling was conducted by physically removing a section of paint and was done to minimize the introduction of the substrate material into the samples. The samples were delivered to EMSL Laboratory, Inc. (EMSL) located in Cinnaminson, New Jersey. EMSL is an American Industrial Hygiene Association (AIHA) accredited laboratory in environmental lead for analysis by Flame AAS (Method SW 846, 7420) for total lead concentrations. The results were provided in percent by weight (% wt.).

The United States Environmental Protection Agency (EPA) defines lead based paint (LBP) as paint or coatings with a result at or greater than 1.0 mg/cm^2, 0.5 %/Wt. or 5,000 parts per million when measured by Flame AAS. The Occupation Safety and Health Administration (OSHA) considers measurable quantities of lead in paints and coatings to be lead-containing. Due to the potential for lead dust to be generated or migrate beyond the work area during renovation/demolition activities, both the EPA and OSHA criteria were used to interpret data. The EPA's Lead Renovation, Repair and Painting Rule (RRP Rule) guides contractors who will be conducting activities that will impact LBP but is not intended to be used to abate, mitigate or completely remove lead-containing materials. Those activities are regulated in the Toxic Substances Control Act (TSCA) sections 402/404.

2.2 LIMITATIONS

This sample analysis letter report has been prepared by EE&G in a manner consistent with industry standards exercised by members of the profession practicing under similar conditions. No other warranty, expressed or implied is made. The intent of this survey was to assist the Client in identifying lead in paint, as defined by the EPA as well as OSHA. Should renovation/demolition plans change from that stated in this report or if work shall impact other building components which were not sampled during this limited survey, the contractor should not impact said building materials until the materials are sampled. Under no circumstances is this letter to be utilized as a proposal or a project specification document without the expressed written consent of EE&G.

EE&G's interpretations and recommendations are based upon the results of the sample analyses in compliance with environmental regulations, and information provided to EE&G by the Client.

This report was prepared solely for the use of EE&G's client and is not intended for use by third party beneficiaries. The client, and shall indemnify and hold EE&G harmless against liability for loss arising out of or relating to reliance on by third party work performed thereunder, or the contents of this report. EE&G will not be held responsible for the interpretation or use by others of data developed pursuant to the compilation of this report, nor for use of segregated portions of this report.

SECTION 3.0

TESTING RESULTS

3.1 FINDINGS

The following painted components tested were identified as LBP:

- Yellow Paint on W. Diesel Engine 6.3 % wt
- Yellow Paint on E. Diesel Engine (DE) 3.2 % wt
- Yellow Paint on W. DE Overflow Barrier 8.8 % wt
- Yellow Paint on E. DE Overflow Barrier 8.4 % wt
- Yellow Paint on DE Metal Support Beam 9.2 % wt

The following painted components tested contain measurable amounts of lead:

- White Paint on Emergency Generator Metal Duct 0.051 % wt
- Gray Paint on Transformer 0.010 % wt

Lead was not found in concentrations above the detection limit of the analytical methods in the following painted components:

- Beige Paint on Interior Wall <0.0080 % wt
- Blue Paint on Pump 1 <0.016 % wt
- Blue Paint on Pump 2 <0.0090 % wt
- Blue Paint on Pump 4 <0.010 % wt
- Blue Paint on Pump 5 <0.021 % wt
- Blue Paint on Pump 3 <0.010 % wt
- Gray Paint on Pump 3 <0.026 % wt
- Red Paint on Pump 1 <0.010 % wt
- Gray Floor Paint <0.0080 % wt
- Beige Paint on Ceiling <0.048 % wt

A copy of the laboratory report is attached. Additional amounts of these paints and coatings may be present in other areas of the facility. Assume all similar LBP in the subject area.

SECTION 4.0

RECOMMENDATIONS

RECOMMENDATIONS FOR LBP

Five samples collected from the subject areas were identified as LBP during this inspection. LBP that has become damaged should be abated. Abatement procedure in which LBP is disturbed should be conducted by trained personnel and in accordance with federal, state and local regulations, including OSHA's lead regulation 29 CFR 1926.62. Also, prior to disposal, the waste stream from LBP abatement (paint, rags, protective suits, debris, etc.) must be characterized by a Toxic Characteristic Leachate Procedure (TCLP) test. The EPA requires TCLP testing to determine if the waste is considered hazardous.

RECOMMENDATIONS FOR OTHER PAINTS AND COATINGS

Two samples collected from the subject area were found to contain measurable quantities of lead but were below the EPA threshold of LBP. OSHA considers measurable quantities of lead in paints and coatings to be lead-containing and a potential source of exposure. Activities that would release lead dust or fumes must be performed by workers in accordance with the OSHA standard for removal of lead containing paint. If these materials can remain intact during renovation or demolition, then no other special handling is required.

OSHA COMPLIANCE

To comply with OSHA lead regulation 29 CFR 1926.62, this report should be made available to personnel that will conduct painting operations at this facility. This regulation considers coatings that contain measurable amounts of lead to be lead-based paint and mandates protective measures when a painting or demolition project involves the disturbance of painted components in such a way as to cause airborne emissions of lead particulate (sanding, scraping, grinding, etc.). These protective measures include: hazard communication training, personnel protection (respirators, protective suits, etc.), engineering controls and personnel air monitoring until results of the personnel monitoring indicate airborne lead concentrations below the Action Level (AL) of 30 micrograms per cubic meter as an eight-hour time weighted average (TWA). In lieu of the above protective measures, painting and or demolition personnel may provide objective historical data from previous similar projects to demonstrate that the AL for lead will not be exceeded.

Please contact the undersigned with questions regarding this letter.

Sincerely,

Hiram A. Aguiar
Senior Project Professional, EE&G
EPA Certified Lead Based Paint Risk Assessor

Reviewed by

Jay Sall, C.I.H.
Senior Technical Advisor, EE&G

APPENDIX A

FLAME AAS, METHOD SW 846, 7420
RESULTS

EMSL Analytical, Inc.
200 Route 130 North, Cinnaminson, NJ 08077
Phone/Fax: (856) 303-2500 / (856) 786-5974
http://www.EMSL.com cinnaminsonleadlab@emsl.com

EMSL Order:	201708576
CustomerID:	EEG50
CustomerPO:	
ProjectID:	

Attn: **Hiram Aguiar**
EE & G
5751 Miami Lakes Drive East
Miami Lakes, FL 33014

Phone:	(305) 374-8300
Fax:	(305) 374-8301
Received:	08/24/17 10:00 AM
Collected:	8/23/2017

Project: **COHBWTP - High Service Pump Station / 2017-2532**

Test Report: Lead in Paint Chips by Flame AAS (SW 846 3050B/7000B)*

Client Sample Description	*Lab ID*	*Collected*	*Analyzed*	*Lead Concentration*
1	*201708576-0001*	8/23/2017	8/24/2017	6.3 % wt
	Site: Yellow P. on Diesel Engine			
2	*201708576-0002*	8/23/2017	8/24/2017	3.2 % wt
	Site: Yellow P. on Em. Generator			
3	*201708576-0003*	8/23/2017	8/24/2017	8.8 % wt
	Site: Yellow P. on D.E. Overflow Barrier			
4	*201708576-0004*	8/23/2017	8/24/2017	8.4 % wt
	Site: Yellow P. on Em. Gen. Overflow Barrier			
5	*201708576-0005*	8/23/2017	8/24/2017	9.2 % wt
	Site: Yellow P. on Em. Gen. Support Beam			
6	*201708576-0006*	8/23/2017	8/24/2017	0.051 % wt
	Site: White P. on Em. Gen. Duct			
7	*201708576-0007*	8/23/2017	8/24/2017	<0.0080 % wt
	Site: Beige P. o Int. Wall			
8	*201708576-0008*	8/23/2017	8/24/2017	<0.016 % wt
	Site: Blue P. on Pump 1			
9	*201708576-0009*	8/23/2017	8/24/2017	<0.0090 % wt
	Site: Blue P. on Pump 2			
10	*201708576-0010*	8/23/2017	8/24/2017	<0.010 % wt
	Site: Blue P. on Pump 4			
11	*201708576-0011*	8/23/2017	8/24/2017	<0.021 % wt
	Site: Blue P. on Pump 5			
12	*201708576-0012*	8/23/2017	8/24/2017	<0.010 % wt
	Site: Blue P. on Pump 3			
13	*201708576-0013*	8/23/2017	8/24/2017	<0.026 % wt
	Site: Gray P. on Pump 3			
14	*201708576-0014*	8/23/2017	8/24/2017	<0.010 % wt
	Site: Red P. on Pump 1			
16	*201708576-0016*	8/23/2017	8/24/2017	<0.0080 % wt
	Site: Gray Floor Paint			

Phillip Worby, Lead Laboratory Manager
or other approved signatory

*Analysis following Lead in Paint by EMSL SOP/Determination of Environmental Lead by FLAA. Reporting limit is 0.008 % wt based on the minimum sample weight per our SOP. Unless noted, results in this report are not blank corrected. This report relates only to the samples reported above and may not be reproduced, except in full, without written approval by EMSL. EMSL bears no responsibility for sample collection activities. Samples received in good condition unless otherwise noted. "<" (less than) result signifies that the analyte was not detected at or above the reporting limit. Measurement of uncertainty is available upon request. The QC data associated with the sample results included in this report meet the recovery and precision requirements unless specifically indicated otherwise. Definitions of modifications are available upon request.

Samples analyzed by EMSL Analytical, Inc. Cinnaminson, NJ NELAP Certifications: NJ 03036, NY 10872, PA 68-00367, AIHA-LAP, LLC ELLAP 100194, A2LA 2845.01

Initial report from 08/25/2017 09:05:47

EMSL Analytical, Inc.
200 Route 130 North, Cinnaminson, NJ 08077
Phone/Fax: (856) 303-2500 / (856) 786-5974
http://www.EMSL.com cinnaminsonleadlab@emsl.com

EMSL Order:	201708576
CustomerID:	EEG50
CustomerPO:	
ProjectID:	

Attn: **Hiram Aguiar**
EE & G
5751 Miami Lakes Drive East
Miami Lakes, FL 33014

Phone:	(305) 374-8300
Fax:	(305) 374-8301
Received:	08/24/17 10:00 AM
Collected:	8/23/2017

Project: **COHBWTP - High Service Pump Station / 2017-2532**

Test Report: Lead in Paint Chips by Flame AAS (SW 846 3050B/7000B)*

Client Sample Description	*Lab ID*	*Collected*	*Analyzed*	*Lead Concentration*
18	*201708576-0018*	8/23/2017	8/24/2017	<0.048 % wt
	Site: Beige Ceiling Paint			
19	*201708576-0019*	8/23/2017	8/24/2017	0.10 % wt
	Site: Gray P. on Transformer (Transformer Room)			

Phillip Worby, Lead Laboratory Manager
or other approved signatory

*Analysis following Lead in Paint by EMSL SOP/Determination of Environmental Lead by FLAA. Reporting limit is 0.008 % wt based on the minimum sample weight per our SOP. Unless noted, results in this report are not blank corrected. This report relates only to the samples reported above and may not be reproduced, except in full, without written approval by EMSL. EMSL bears no responsibility for sample collection activities. Samples received in good condition unless otherwise noted. "<" (less than) result signifies that the analyte was not detected at or above the reporting limit. Measurement of uncertainty is available upon request. The QC data associated with the sample results included in this report meet the recovery and precision requirements unless specifically indicated otherwise. Definitions of modifications are available upon request.

Samples analyzed by EMSL Analytical, Inc. Cinnaminson, NJ NELAP Certifications: NJ 03036, NY 10872, PA 68-00367, AIHA-LAP, LLC ELLAP 100194, A2LA 2845.01

Initial report from 08/25/2017 09:05:47

OrderID: 201708576

EMSL ANALYTICAL, INC.
LABORATORY • PRODUCTS • TRAINING

Lead (Pb) Chain of Custody

EMSL Order ID *(Lab Use Only)*: 201708576

EMSL ANALYTICAL, INC.
200 ROUT 130 NORTH
CINNAMINSON, NJ 08077

Company : EE&G Environmental Services, LLC		**EMSL-Bill to:** ☒ Same ☐ Different If Bill to is Different note instructions in Comments**	
Street: 5751 Miami Lakes Drive		*Third Party Billing requires written authorization from third party*	
City: Miami Lakes	**State/Province: FL**	**Zip/Postal Code: 33014**	**Country: USA**
Report To (Name): Hiram Aguiar		**Fax #: 305-374-9004**	
Telephone #: 305-374-8300		**Email Address: Haguiar@eeandg.com**	
Project Name/Number: COHBWTP - High Service Pump Station 2017-2532			
Please Provide Results: ☐ Fax ☒ Email	**Purchase Order:**	**U.S. State Samples Taken:**	

Turnaround Time (TAT) Options* - Please Check

☐ 3 Hours	☐ 6 Hours	☒ 24 Hours	☐ 48 Hours	☐ 3 Days	☐ 4 Days	☐ 5 Days	☐ 10 Days

**Analysis completed in accordance with EMSL's Terms and Conditions located in the Price Guide*

Matrix	Method	Instrument	Reporting Limit	Check
Chips ☐ mg/cm² ☒ % by wt.	SW846-7000B/7420 or AOAC 974.02	Flame Atomic Absorption	0.01%	☒
Air	NIOSH 7082	Flame Atomic Absorption	4 µg/filter	☐
	NIOSH 7105	Graphite Furnace AA	0.03 µg/filter	☐
	NIOSH 7300 modified	ICP-AES	0.5 µg/filter	☐
Wipe* ☐ ASTM ☐ non ASTM *if no box is checked, non-ASTM Wipe is assumed	SW846-7000B/7420	Flame Atomic Absorption	10 µg/wipe	☐
	SW846-6010B or C	ICP-AES	0.5 µg/wipe	☐
TCLP	SW846-1311/7420/SM 3111B	Flame Atomic Absorption	0.4 mg/L (ppm)	☐
	SW846-6010B or C	ICP-AES	0.1 mg/L (ppm)	☐
Soil	SW846-7420	Flame Atomic Absorption	40 mg/kg (ppm)	☐
	SW846-7421	Graphite Furnace AA	0.3 mg/kg (ppm)	☐
	SW86-6010B or C	ICP-AES	1 mg/kg (ppm)	☐
Wastewater	SM3111B or SW846-7000B/7420	Flame Atomic Absorption	0.4 mg/L (ppm)	☐
	EPA 200.9	Graphite Furnace AA	0.003 mg/L (ppm)	☐
	SW846-6010B or C	ICP-AES	1 mg/kg (ppm)	☐
Drinking Water	EPA 200.9	Graphite Furnace AA	0.003 mg/L (ppm)	☐

Other:	**Preservation Method (Water):**
Name of Sampler: Hiram Aguiar	**Signature of Sampler:**

	Sample #	Location	Volume/Area	Date/Time Sampled
1	1	Yellow P. on Diesel Engine	Paint Chip	8-23-17
2	2	Em. Generator		
3	3	D.E. overflow barrier		
4	4	Em. Gen. ↓ ↓		
5	5	EM. Gen. Support Beam		
6	6	White P. on EM. Gen. Duct		

Client Sample #'s	1 -			**Total # of Samples:**	(19) AR
Relinquished (Client):	**Hiram Aguiar**	**Date:**	8-23-17	**Time:**	
Received (Lab):	[signature]	**Date:**	8/24/17	**Time:**	10 Am
Comments:					

Controlled Document --- Lead (Pb) COC – R1 – 3/18/2009

Page 1 of ____ pages

OrderID: 201708576

COHBNTP 2017-2532

EMSL ANALYTICAL, INC.
LABORATORY • PRODUCTS • TRAINING

LEAD (Pb) CHAIN OF CUSTODY

EMSL ORDER ID *(Lab Use Only):* 201708576

EMSL ANALYTICAL, INC.
200 ROUT 130 NORTH
CINNAMINSON, NJ
08077
PHONE: (856) 858-4800
FAX: (856) 858-3899

Additional Pages of the Chain of Custody are only necessary if needed for additional sample information

	Sample #	Location	Volume/Area	Date/Time Sampled
7	7	Beige P. on Int. Wall	Paint Chip	8-23-17
8	8	Blue P. on Pump 1		
9	9	2		
10	10	4		
11	11	5		
12	12	3		
13	13	Gray P. on Pump 3		
14	14	Red P. on Pump 1		
15	15	Orange P. on Pump 1		
16	16	Gray Floor Paint		
17	17	Gray P. on High Voltage Box		
18	18	Beige Ceiling Paint		
19	19	Gray P. on Transformer	(Transformer Km)	

Comments/Special Instructions:

* 15 → 0.01g
17 → 0.003g
samples insufficient - cancelled analysis
emailed 8/24/17, C.D.

Page 2 of 2 pages

Controlled Document – Lead (Pb) COC – R1 – 3/18/2009

APPENDIX B

FIGURES

CITY OF HALLANDALE BEACH
WATER TREATMENT PLANT

HIGH SERVICE PUMP STATION REPLACEMENT

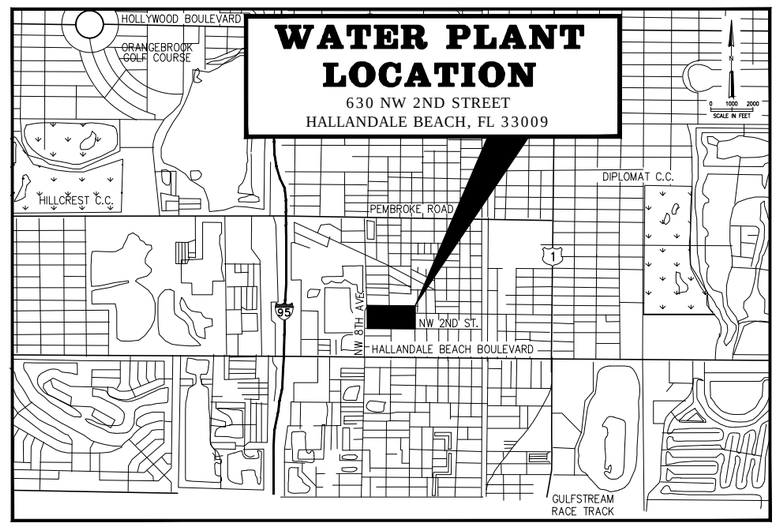

LOCATION MAP

NTS

Hazen

HAZEN AND SAWYER
4000 HOLLYWOOD BOULEVARD, SUITE 750N
HOLLYWOOD, FLORIDA 33021
CERTIFICATE OF AUTHORIZATION NO. : 2771

50% SUBMITTAL

SEPTEMBER 2017

TITLE SHEET AND LOCATION MAP
SHEET 1 OF 20
DRAWING No. G-01

50% SUBMITTAL

PLOT DATE: 8/11/2017 11:08 AM BY: LAURA
XREFS=
File = H:\40621-000 Hallandale High Service Pumps\Drawings\Gen\G-01 Saved by CALI3 Save date = 8/4/2017 10:39 AM

LIST OF DRAWINGS

GENERAL

SHEET TITLE	SHEET DESCRIPTION
G-01	TITTLE SHEET AND LOCATION MAP
G-02	LIST OF DRAWINGS
G-03	NOTES
G-04	ABBREVIATIONS, SYMBOLS AND LEGEND

CIVIL

C-01	EXISTING SITE PLAN
C-02	STAGING PLAN
C-03	PROPOSED SITE PLAN
C-04	YARD PIPING KEY MAP
C-05	TANK LEVEL TRANSMITTER REPLACEMENT

MECHANICAL

M-01	HIGH SERVICE PUMPS DEMOLITION PLAN
M-02	HIGH SERVICE PUMPS DEMOLITION PHOTOS SHEET 1
M-03	HIGH SERVICE PUMPS DEMOLITION PHOTOS SHEET 2
M-04	HIGH SERVICE PUMPS PROPOSED PLAN
M-05	HIGH SERVICE PUMPS SECTION
M-06	
M-07	
M-08	
M-09	MECHANICAL DETAILS SHEET 1
M-10	MECHANICAL DETAILS SHEET 1

STRUCTURAL

S-01	GENERAL STRUCTURAL NOTES
S-02	HIGH SERVICE PUMPS DEMOLITION PLAN
S-03	HIGH SERVICE PUMPS PROPOSED PLAN

ARCHITECTURAL

A-01	PUMP STATION LIFE SAFETY PLAN

ELECTRICAL

SHEET TITLE	SHEET DESCRIPTION
E-01	LEGEND AND SYMBOLS
E-02	GENERAL NOTES AND ABBREVIATIONS
E-03	OVERALL SITE PLAN
E-04	EXISTING ONE-LINE DIAGRAM
E-05	PROPOSED ONE-LINE DIAGRAM
E-06	HIGH SERVICE PUMPS PROPOSED PLAN
E-07	ELECTRICAL ROOM PLAN
E-08	GENERATOR BUILDING
E-09	ELECTRICAL DEMOLITION PHOTOS
E-10	LIME PLANT MCC-2 MODIFICATION

INSTRUMENTATION

I-01	INSTRUMENTATION SYMBOLS AND LEGEND
I-02	SCADA NETWORK DIAGRAM
I-03	HIGH SERVICE PUMP STATION P&ID
I-04	INSTRUMENTATION DETAILS

HVAC

H-01	HVAC NOTES AND SCHEDULES
H-02	HVAC NOTES AND SCHEDULES
H-03	HVAC PLAN

REV	ISSUED FOR	DATE	BY

PROJECT ENGINEER: -
DESIGNED BY: G.A.B.
DRAWN BY: G.B.
CHECKED BY:
IF THIS BAR DOES NOT MEASURE 1" THEN DRAWING IS NOT TO FULL SCALE 0 1/2" 1"

GEORGE A. BROWN, PE NO. 56076

Hazen
HAZEN AND SAWYER
4000 HOLLYWOOD BOULEVARD, SUITE 750N
HOLLYWOOD, FLORIDA 33021
CERTIFICATE OF AUTHORIZATION NO. : 2771

CITY OF HALLANDALE BEACH

WATER TREATMENT PLANT
HIGH SERVICE PUMP REPLACEMENT

Hallandale Beach
PROGRESS. INNOVATION. OPPORTUNITY

LIST OF DRAWINGS

DATE: SEPTEMBER 2017
HAZEN NO.: 40621-000
CONTRACT N0.: 1
DRAWING NUMBER: G-02

50% SUBMITTAL

File: H:\40621-000 HALLANDALE HIGH SERVICE PUMPS\DRAWINGS\GEN\G-02 Saved By ADRIANA Save Date: 2017/09/13 2:22 PM
PLOT DATE: 2017/09/11 11:19:20 AM BY: LAURA

GENERAL NOTES

1. DRAWINGS THAT ILLUSTRATE EXISTING SITE, STRUCTURES, PIPING, ELECTRICAL AND EQUIPMENT ARE BASED UPON RECORD DRAWINGS AVAILABLE UPON REQUEST FOR GENERAL INFORMATIONAL PURPOSES ONLY. REFERENCE THE SECTION ENTITLED "SUMMARY OF WORK".
2. FIELD OBSERVATIONS INDICATE THAT FIELD CONDITIONS DO NOT FULLY MATCH THE ABOVE REFERENCED RECORD DRAWINGS.
3. ALL ELEVATIONS ARE BASED ON THE NATIONAL GEODETIC VERTICAL DATUM OF 1929 (NGVD '29)
4. LOCATION, SIZE, MATERIAL, ALIGNMENT AND ELEVATIONS OF EXISTING FACILITIES HAVE BEEN DETERMINED FROM AVAILABLE RECORDS. THIS INFORMATION IS FURNISHED AS A GUIDE FOR THE CONTRACTOR. THE ENGINEER AND THE OWNER DO NOT GUARANTEE THE ACCURACY OF THESE DATA. THE CONTRACTOR SHALL BE FULLY RESPONSIBLE FOR DETERMINING THE LOCATION AND PROTECTING ALL TYPES OF UTILITIES AND STRUCTURES ENCOUNTERED DURING THE COURSE OF OPERATION ON THIS PROJECT.
5. CONTRACTOR RETAINS FULL RESPONSIBILITY FOR FIELD VERIFICATION OF ALL IMPROVEMENTS TO BE REMOVED FOR THIS WORK. VERIFICATION SHALL INCLUDE STRUCTURAL, ARCHITECTURAL, HVAC, PLUMBING, PROCESS PIPING, ELECTRICAL, IRRIGATION, CONTROLS, EQUIPMENT, FILTER MEDIA AND ANY AND ALL OTHER EXISTING EQUIPMENT WITHIN THE BOUNDARY OF THE WORK, WHETHER SHOWN OR NOT.
6. THE CONTRACTOR IS REQUIRED TO OBTAIN WRITTEN APPROVAL FROM THE ENGINEER FOR ANY DEVIATIONS FROM THE PLANS AND/OR SPECIFICATIONS.
7. THE CONTRACTOR SHALL FIELD VERIFY ALL DIMENSIONS AND ELEVATIONS PRIOR TO COMMENCEMENT OF CONSTRUCTION AND SHALL NOTIFY THE ENGINEER IMMEDIATELY OF ANY REQUIRED PLAN DEVIATIONS.
8. THE CONTRACTOR SHALL BE RESPONSIBLE FOR OBTAINING A DEWATERING PERMIT FROM THE SOUTH FLORIDA WATER MANAGEMENT DISTRICT IF REQUIRED.
9. RESTRAINED JOINT PIPE SHALL BE USED FOR ALL PIPING ON THIS PROJECT. THRUST BLOCKS SHALL NOT BE PERMITTED.
10. CONTRACTOR SHALL PROVIDE A MINIMUM VERTICAL CLEARANCE OF 6" BETWEEN ALL LINES THAT CROSS. CROSSINGS WITH POTABLE WATER LINES SHALL BE AS SHOWN ON THE DRAWINGS.
11. THE CONTRACTOR SHALL RECORD ELEVATIONS OF EXISTING BURIED UTILITIES AT ALL ENCOUNTERED CROSSINGS WITH NEW WORK.
12. ALL CONNECTIONS TO EXISTING PIPING SHALL BE MADE UNDER THE DIRECTION OF THE CITY.
13. MINIMUM DEPTH OF COVER FOR ALL UNDERGROUND PIPING SHALL BE 36" EXCEPT WHERE SHOWN OTHERWISE ON PLANS.
14. PIPE DEFLECTION SHALL NOT EXCEED 75% OF THE MAXIMUM DEFLECTION RECOMMENDED BY THE MANUFACTURER.
15. THE CONTRACTOR SHALL BE RESPONSIBLE AT ALL TIMES THROUGHOUT THE DURATION OF CONSTRUCTION AND UNTIL ACCEPTANCE OF THE WORK FOR THE PROTECTION OF EXISTING AND NEWLY INSTALLED UTILITIES FROM DAMAGE OR DISRUPTION OF SERVICE.
16. THE CONTRACTOR SHALL ADJUST TO FINAL GRADE ALL EXISTING UTILITY CASTINGS INCLUDING VALVE BOXES, MANHOLES, HAND HOLES, PULL BOXES, INLETS AND SIMILAR STRUCTURES IN CONSTRUCTION AREA TO BE OVERLAID WITH ASPHALT.
17. EXISTING BURIED PIPE AND CONDUIT 2" DIAMETER AND SMALLER IS NOT NECESSARILY SHOWN. ELECTRICAL AND INSTRUMENTATION DUCT BANKS NOT SHOWN. WHEN EXCAVATING, THE CONTRACTOR SHALL TAKE ALL NECESSARY PRECAUTIONS TO AVOID DAMAGE TO UNDERGROUND UTILITIES.
18. THE CONTRACTOR SHALL MAKE EXPLORATORY EXCAVATIONS TO VERIFY LOCATIONS AND ELEVATIONS OF UNDERGROUND UTILITIES THAT MAY INTERFERE WITH THE WORK. THE NUMBER OF EXPLORATORY EXCAVATIONS SHALL BE SUFFICIENT TO DETERMINE ALIGNMENT, LOCATION AND ELEVATION.
19. THE WORK TO BE PERFORMED UNDER THESE CONTRACT DOCUMENTS IS AT A FUNCTIONING WATER TREATMENT PLANT WITH A PERMITTED WATER SUPPLY WELLFIELD. THE CONTRACTOR SHALL COMPLY WITH REQUIREMENTS OF THE SPECIFICATIONS, REGULATORY AGENCIES, AND FACILITY OPERATIONS STAFF AT ALL TIMES.
20. THE CONTRACTOR IS ADVISED THAT ALL FITTINGS THAT MAY BE REQUIRED TO MAKE UP VERTICAL ALIGNMENT MAY NOT BE SHOWN ON THE YARD PIPING PLANS.
21. CONTRACTOR SHALL RESTORE ALL LANDSCAPING AND SODDING IMPACTED BY CONSTRUCTION TO ITS ORIGINAL CONDITION OR BETTER.
22. CONTRACTOR SHALL DISPOSE OF ALL DEMOLISHED MATERIALS IN ACCORDANCE WITH LOCAL, STATE AND FEDERAL REGULATIONS.
23. ALL IMPACTED CONSTRUCTION AREAS SHALL BE RETURNED TO PRECONSTRUCTION CONDITIONS OR BETTER BY CONTRACTOR.

EROSION AND SEDIMENT CONTROL NOTES

1. THE CONTRACTOR SHALL PREPARE, OBTAIN APPROVAL OF AND IMPLEMENT A STORM WATER POLLUTION PREVENTION PLAN PER THE SPECIFICATION TITLED "TEMPORARY EROSION AND SEDIMENT CONTROL".
2. CONTRACTOR SHALL EMPLOY BEST MANAGEMENT PRACTICES THROUGHOUT CONSTRUCTION IN ORDER TO ENSURE POLLUTION PREVENTION. CONTRACTOR SHALL COMPLY WITH ALL LOCAL STATE AND OTHER GOVERNMENTAL ENVIRONMENTAL REGULATIONS THROUGHOUT CONSTRUCTION.
3. DURING CONSTRUCTION ALL CATCH BASINS TO BE EQUIPPED WITH FILTER FABRIC AND HAY BALES OVER GRATES.
4. SILT FENCES SHALL BE INSTALLED AS NECESSARY TO CONTROL OR PREVENT DISCHARGE OF SEDIMENT ONTO ADJACENT UNDISTURBED AREAS, OR OFF-SITE AREAS.
5. ALL AREAS DISTURBED DURING CONSTRUCTION SHALL BE STABILIZED WITHIN A REASONABLE PERIOD OF TIME TO ASSURE MINIMUM EROSION OF SOILS.
6. NO LAND CLEARING OR GRADING SHALL BEGIN UNTIL ALL EROSION CONTROL MEASURES HAVE BEEN INSTALLED.
7. ALL EXPOSED AREAS SHALL BE SODDED AS SPECIFIED WITHIN 30 DAYS OF FINAL GRADING.
8. MAINTAIN EROSION CONTROL MEASURES AFTER EACH RAIN AND AT LEAST ONCE A WEEK.
9. THIS PLAN SHALL NOT BE CONSIDERED ALL INCLUSIVE AS THE CONTRACTOR SHALL TAKE ALL NECESSARY PRECAUTIONS TO PREVENT SOIL SEDIMENT FROM LEAVING THE SITE.
10. CONTRACTOR SHALL COMPLY WITH ALL STATE AND LOCAL ORDINANCES THAT APPLY.
11. ADDITIONAL EROSION AND SEDIMENT CONTROL MEASURES WILL BE INSTALLED IF DEEMED NECESSARY BY CITY, COUNTY, AND STATE OF FLORIDA ON SITE INSPECTION, AT NO ADDITIONAL COST TO THE OWNER.
12. LAND DISTURBING ACTIVITIES SHALL NOT COMMENCE UNTIL APPROVAL TO DO SO HAS BEEN RECEIVED BY GOVERNING AUTHORITIES.
13. IF INSTALLATION OF STORM DRAINAGE SYSTEM (WHERE SHOWN ON THE DRAWINGS) SHOULD BE INTERRUPTED BY WEATHER OR NIGHTFALL, THE PIPE ENDS SHALL BE COVERED WITH FILTER FABRIC.
14. ALL EXISTING STRUCTURES, FENCING, TREES, AND ETC. SHOW TO BE REMOVED ON THE DEMOLITION DRAWINGS SHALL BE REMOVED AND DISPOSED OF OFF SITE. BURNING WILL NOT BE ALLOWED ON-SITE.
15. CONTRACTOR SHALL BE RESPONSIBLE TO TAKE WHATEVER MEANS NECESSARY TO ESTABLISH PERMANENT SOIL STABILIZATION.
16. CONTRACTOR IS TO PROVIDE EROSION CONTROL/SEDIMENTATION BARRIER (HAY BALES OR SILTATION CURTAIN) TO PREVENT SILTATION OF ADJACENT PROPERTY, STREETS, STORM SEWERS AND WATER WAYS. IN ADDITION CONTRACTOR SHALL PLACE STRAW, MULCH OR OTHER SUITABLE MATERIAL ON GROUND IN AREAS WHERE CONSTRUCTION RELATED TRAFFIC IS TO ENTER AND EXIT SITE IF IN THE OPINION OF THE ENGINEER AND/OR LOCAL AUTHORITIES IF EXCESSIVE QUANTITIES OF EARTH ARE TRANSPORTED OFF-SITE EITHER BY NATURAL DRAINAGE OR BY VEHICULAR TRAFFIC. THE CONTRACTOR IS TO REMOVE AND CLEAN SAID EARTH TO THE SATISFACTION OF THE ENGINEER AND/OR AUTHORITIES. EROSION CONTROL BARRIER SHALL BE ESTABLISHED AS THE FIRST ITEM OF WORK.

PROPERTY AND FLOOD NOTES

PROPERTY INFO:

FOLIO No.: 514228010010

ADDRESS:

630 NW 2ND STREET
HALLANDALE BEACH, FL 33009

LOCATION INFO:

TOWNSHIP: 51S
RANGE: 42E
SECTION: 28
LATITUDE: N25° 59' 18.24"
LONGITUDE: W80° 09' 18"

FLOOD INFO:

100 YEAR FLOOD ELEVATION: 8.3 (NGVD 1929)
SOURCE: BROWARD COUNTY FLOOD MAP MARCH, 2000.

REV	ISSUED FOR	DATE	BY

PROJECT ENGINEER: -
DESIGNED BY: G.A.B.
DRAWN BY: G.B.
CHECKED BY:
IF THIS BAR DOES NOT MEASURE 1" THEN DRAWING IS NOT TO FULL SCALE 0 1/2" 1"

GEORGE A. BROWN, PE NO. 56076

Hazen
HAZEN AND SAWYER
4000 HOLLYWOOD BOULEVARD, SUITE 750N
HOLLYWOOD, FLORIDA 33021
CERTIFICATE OF AUTHORIZATION NO. : 2771

CITY OF HALLANDALE BEACH

WATER TREATMENT PLANT
HIGH SERVICE PUMP REPLACEMENT

Hallandale Beach
PROSPERITY, INNOVATION, OPPORTUNITY

NOTES

DATE: SEPTEMBER 2017
HAZEN NO.: 40621-000
CONTRACT N0.: 1
DRAWING NUMBER: G-03

50% SUBMITTAL

File: H:\40621-000 HALLANDALE HIGH SERVICE PUMPS\DRAWINGS\GEN\G-03 Saved By LAURA Save Date: 2017/08/11 8:23 AM
PLOT DATE: 2017/08/11 11:08:47 AM BY: LAURA

SYMBOLS

- SOLENOID
- MOTOR OPERATED
- BALL VALVE
- BUTTERFLY VALVE/DAMPER
- CHECK VALVE
- GATE VALVE
- PLUG VALVE
- THREE WAY VALVE
- PRESSURE REDUCING/ RELIEF VALVE
- PRESSURE REGULATING VALVE
- VENTURI METER
- FLAME ARRESTER
- HOSE BIBB (PLAN)
- HOSE BIBB (ELEVATION)
- MECHANICAL COUPLING
- HARNESSED MECHANICAL COUPLING
- GROOVED COUPLING
- HARNESSED EXPANSION JOINT
- EXPANSION JOINT
- GAUGE
- UNION
- MAGNETIC METER
- VENTURI METER
- FIRE HYDRANT
- MANHOLE
- SEALED MANHOLE
- PROPOSED PIPELINE/STRUCTURE
- EXISTING UTILITIES/STRUCTURE
- PROPOSED PIPELINE (DOUBLE LINE IF SCALE OF DRAWING PERMITS)
- WELDED JOINT
- FLANGED JOINT
- MECHANICAL JOINT
- SOCKET WELDED JOINT
- PROPOSED STRUCTURE OR FACILITY
- REDUCER (SINGLE LINE)
- REDUCER (DOUBLE LINE)
- CONCRETE PIPE SUPPORT

ABBREVIATIONS

VALVES, FITTINGS, ETC.

ARV	AIR RELIEF VALVE
BV	BALL VALVE
BF	BLIND FLANGE
BFV	BUTTERFLY VALVE
CGV	CHLORINE GAS VALVE UNDER VACUUM
CV	CHECK VALVE
CPLG	COUPLING
ED	EQUIPMENT DRAIN
EXP JT	EXPANSION JOINT
FH	FIRE HYDRANT
FTG	FITTING
FLG	FLANGE
FD	FLOOR DRAIN
GV	GATE VALVE
HB	HOSE BIBB
LR	LONG RADIUS
MJ	MECHANICAL JOINT
MOV	MOTOR OPERATED VALVE
NPT	NATIONAL PIPE THREAD
PE	PLAIN END
PV	PLUG VALVE
PS	PUMP STATION
PRV	PRESSURE RELIEF VALVE
RD	ROOF DRAIN
SOV	SOLENOID OPERATED VALVE
THD	THREADED
VAC	VACUUM

PIPING

CU	COPPER OR CUBIC
DIP	DUCTILE IRON PIPE
FM	FORCE MAIN
GSP	GALVANIZED STEEL PIPE
IPS	IRON PIPE SIZE
PVC	POLYVINYLCHLORIDE
PCCP	PRECAST CONCRETE CYLINDER PIPE
RCP	REINFORCED CONCRETE PIPE

GENERAL

A/C	AIR CONDITIONER
AL, ALUM	ALUMINUM
APPROX	APPROXIMATE
AFF	ABOVE FINISHED FLOOR
ARCH	ARCHITECTURAL
AS	ANTISCALANT
BD	BLOWDOWN
BLK	BLOCK
BOTT	BOTTOM
BP	BID PACKAGE
BLDG	BUILDING
BSP	BACTERIOLOGICAL SAMPLING POINT
BWD	BACKWASH DRAIN
CB	CATCH BASIN
CA	SODIUM HYDROXIDE (CAUSTIC)
CC	CENTER TO CENTER
CHK'D	CHECKERED
CL	CENTER LINE
CLG	CHLORINE GAS
CLS	CHLORINE SOLUTION
CO	CLEAN OUT
CN	CONCENTRATE WATER
CLGV	CHLORINE GAS - VACUUM
CLR	CLEAR
COL	COLUMN
CO	COMPANY
CONC	CONCRETE
CONST	CONSTRUCTION
CONT	CONTINUOUS
CSD	CLEANING SOLUTION DRAIN
CSR	CLEANING SOLUTION RETURN
CS	CHLORINE SOLUTION
CSS	CLEANING SOLUTION SUPPLY
CW	CONDITIONED WATER
D	DRAIN
DET	DETAIL
DIAG	DIAGONAL
DIA	DIAMETER
DIM	DIMENSION
DISCH	DISCHARGE
DWL	DOWEL
DN	DOWN
DWG	DRAWING
EA	EACH
EE	EACH END
EF	EACH FACE
EW	EACH WAY
ECC	ECCENTRIC
EFF	EFFLUENT
ELEC	ELECTRIC
EL, ELEV	ELEVATION
EOP	EDGE OF PAVEMENT
EQUIP	EQUIPMENT
EXH	EXHAUST
EXIST, EX	EXISTING
EXP	EXPANSION
EXT	EXTERIOR
FIN	FINISH
FE	FIRE EXTINGUISHER
FL	FLOOR
FF	FINISH FLOOR
FLG	FLANGED
FM	FORCE MAIN
FR	FUEL RETURN
FS	FUEL SUPPLY
FSS	FLUSHING SOLUTION SUPPLY
FTG	FOOTING
FW	FINISHED WATER
GALV	GALVANIZED
GPM	GALLONS PER MINUTE
HP	HIGH POINT
HWL	HIGH WATER LEVEL
HORIZ	HORIZONTAL
HWH	HOT WATER HEATER
INFL	INFLUENT
INJ	INJECTION
ID	INSIDE DIAMETER
INSUL	INSULATION
INV	INVERT
JT	JOINT
LG	LONG
LN	LINE
LP	LOW POINT
LWL	LOW WATER LEVEL
MH	MANHOLE
MANUF	MANUFACTURER
MGD	MILLION GALLONS PER DAY
MO	MASONRY OPENING
MAX	MAXIMUM
MECH	MECHANICAL
MIN	MINIMUM
MJ	MECHANICAL JOINT
MOV	MOTOR OPERATED VALVE
NAVD	NORTH AMERICAN VERTICAL DATUM
NF	NANOFILTRATION
NPW	NON POTABLE WATER
NIC	NOT IN CONTRACT
NTS	NOT TO SCALE
NO	NUMBER
OC	ON CENTER
OPNG	OPENING
OD	OUTSIDE DIAMETER
OF	OUTSIDE FACE
OF	OVERFLOW
ORP	OXIDATION REDUCTION POTENTIAL
PCSR	PERMEATE CLEANING SOLUTION RETURN
PM	PERMEATE WATER
PW	POTABLE WATER
LBS/FT	POUNDS PER FOOT
P/L	PROPERTY LINE
RAD, R	RADIUS
RECIR	RECIRCULATION
RED	REDUCING
REHAB	REHABILITATION
REINF	REINFORCING
REQ'D	REQUIRED
RJ	RESTRAINED JOINT
RO	REVERSE OSMOSIS
ROT	ROTATED
R/W, ROW	RIGHT OF WAY
RW	RAW WATER
S	SAMPLE
SAN	SANITARY
SFA	SULFURIC ACID
SECT	SECTION
SEQ	SEQUESTRANT
SH	SODIUM HYPOCHLORITE
SHT	SHEET
SI	SCALE INHIBITOR
SL	SLUDGE
SOF	SOFTENED WATER
SPD	SUMP PUMP DISCHARGE
SPEC	SPECIFICATION
SQ	SQUARE
SS	SANITARY SEWER
SST	STAINLESS STEEL
STL	STEEL
STRUC	STRUCTURAL
SYMM	SYMMETRICAL
TBD	TO BE DETERMINED
TEMP	TEMPORARY
THK	THICK
TI	TEMPERATURE INDICATOR
TOC	TOP OF CONCRETE
TOS	TOP OF SLAB
TYP	TYPICAL
VTR	VENT THROUGH ROOF
VERT	VERTICAL
WTR	WATER
W/L	WATER LEVEL
WWF	WELDED WIRE FABRIC
W/	WITH

SECTION AND DETAIL IDENTIFICATION

SECTION IDENTIFICATION

(1) SECTION CUT ON DRAWING G-1:

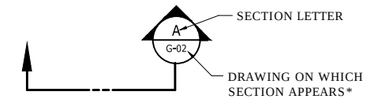

(2) ON DRAWING G-2 THIS SECTION IS IDENTIFIED AS:

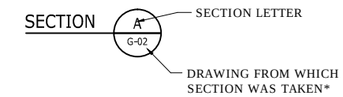

DETAIL IDENTIFICATION

(1) DETAIL CALL-OUT ON DRAWING G-1 AS:

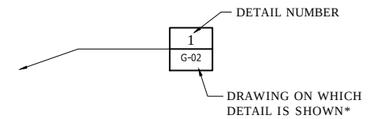

(2) ON DRAWING G-2 THIS DETAIL IDENTIFIED AS:

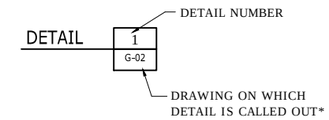

STANDARD DETAIL IDENTIFICATION

(1) DETAIL CALL-OUT ON PLAN OR SECTION:

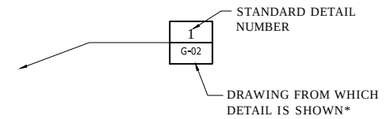

(2) ON DRAWING G-4 THIS DETAIL IDENTIFIED AS:

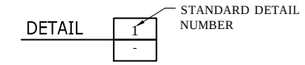

NOTE: IF PLAN AND SECTION (OR DETAIL CALL-OUT AND DETAIL) ARE SHOWN ON SAME DRAWING, DRAWING NUMBER IS REPLACE BY A LINE.

NOTES:

1. ELECTRICAL SYMBOLS SHOWN ON ELECTRICAL SHEETS.
2. FOR WELDING SYMBOLS USE AMERICAN WELDING SOCIETY STANDARD SYMBOLS. SEE AMERICAN INSTITUTE OF STEEL CONSTRUCTION MANUAL.

REV	ISSUED FOR	DATE	BY

PROJECT ENGINEER:	-
DESIGNED BY:	G.A.B.
DRAWN BY:	G.B.
CHECKED BY:	
IF THIS BAR DOES NOT MEASURE 1" THEN DRAWING IS NOT TO FULL SCALE	0 1/2" 1"

GEORGE A. BROWN, PE NO. 56076

Hazen
HAZEN AND SAWYER
4000 HOLLYWOOD BOULEVARD, SUITE 750N
HOLLYWOOD, FLORIDA 33021
CERTIFICATE OF AUTHORIZATION NO. : 2771

CITY OF HALLANDALE BEACH

WATER TREATMENT PLANT
HIGH SERVICE PUMP REPLACEMENT

Hallandale Beach
PROGRESS, INNOVATION, OPPORTUNITY

ABBREVIATIONS,
SYMBOLS AND LEGEND

DATE:	SEPTEMBER 2017
HAZEN NO.:	40621-000
CONTRACT NO.:	1
DRAWING NUMBER:	G-04

50% SUBMITTAL

File: H:\40621-000 HALLANDALE HIGH SERVICE PUMPS\DRAWINGS\GEN\G-04 Saved By LAURA Save Date: 2017/08/11 8:23 AM
PLOT DATE: 2017/08/11 11:08:55 AM BY: LAURA

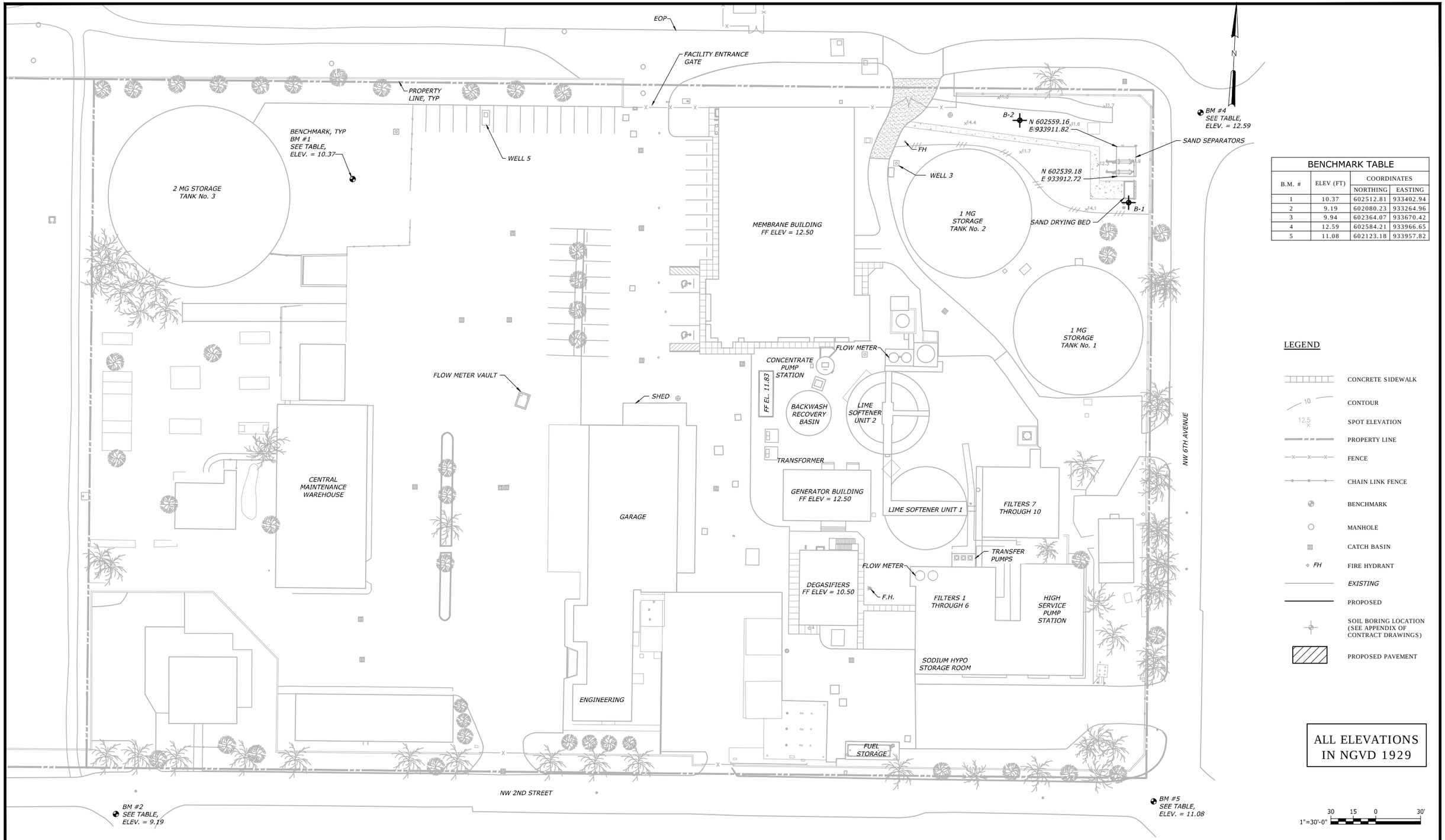

BENCHMARK TABLE

B.M. #	ELEV (FT)	COORDINATES	
		NORTHING	EASTING
1	10.37	602512.81	933402.94
2	9.19	602080.23	933264.96
3	9.94	602364.07	933670.42
4	12.59	602584.21	933966.65
5	11.08	602123.18	933957.82

LEGEND

- CONCRETE SIDEWALK
- CONTOUR (10)
- SPOT ELEVATION (12.5)
- PROPERTY LINE
- FENCE
- CHAIN LINK FENCE
- BENCHMARK
- MANHOLE
- CATCH BASIN
- FH — FIRE HYDRANT
- EXISTING
- PROPOSED
- SOIL BORING LOCATION (SEE APPENDIX OF CONTRACT DRAWINGS)
- PROPOSED PAVEMENT

ALL ELEVATIONS IN NGVD 1929

REV	ISSUED FOR	DATE	BY

PROJECT ENGINEER: -
DESIGNED BY: G.A.B.
DRAWN BY: G.B.
CHECKED BY:
IF THIS BAR DOES NOT MEASURE 1" THEN DRAWING IS NOT TO FULL SCALE 0 1/2" 1"

GEORGE A. BROWN, PE No. 56076

Hazen

HAZEN AND SAWYER
4000 HOLLYWOOD BOULEVARD, SUITE 750N
HOLLYWOOD, FLORIDA 33021
CERTIFICATE OF AUTHORIZATION NO. : 2771

CITY OF HALLANDALE BEACH

WATER TREATMENT PLANT
HIGH SERVICE PUMP REPLACEMENT

Hallandale Beach
PROGRESS. INNOVATION. OPPORTUNITY.

EXISTING SITE PLAN

DATE: SEPTEMBER 2017
HAZEN NO.: 40621-000
CONTRACT NO.: 1
DRAWING NUMBER: C-01

50% SUBMITTAL

File: H:\40621-000 HALLANDALE HIGH SERVICE PUMPS\DRAWINGS\CIVIL\C-01 Saved By LAURA Save Date: 2017/08/09 3:03 PM
PLOT DATE: 2017/08/11 11:06:04 AM BY: LAURA

NOTES:

1. PARKING FOR CONTRACTOR'S VEHICLES IS LIMITED TO STAGING AREA SHOWN.
2. CONTRACTOR TO ENSURE THAT PLANT ACCESS ROADWAY IS KEPT OPEN. OBTAIN PRIOR WRITTEN APPROVAL BY THE CITY BEFORE RESTRICTING OR BLOCKING ACCESS.
3. CONTRACTOR SHALL REFER TO SPECIFICATION 01550 FOR ADDITIONAL REQUIREMENTS REGARDING SITE ACCESS AND STORAGE.
4. CONTRACTOR SHALL REFER TO SPECIFICATION 01510 FOR TEMPORARY UTILITIES AND SERVICES DURING CONSTRUCTION.

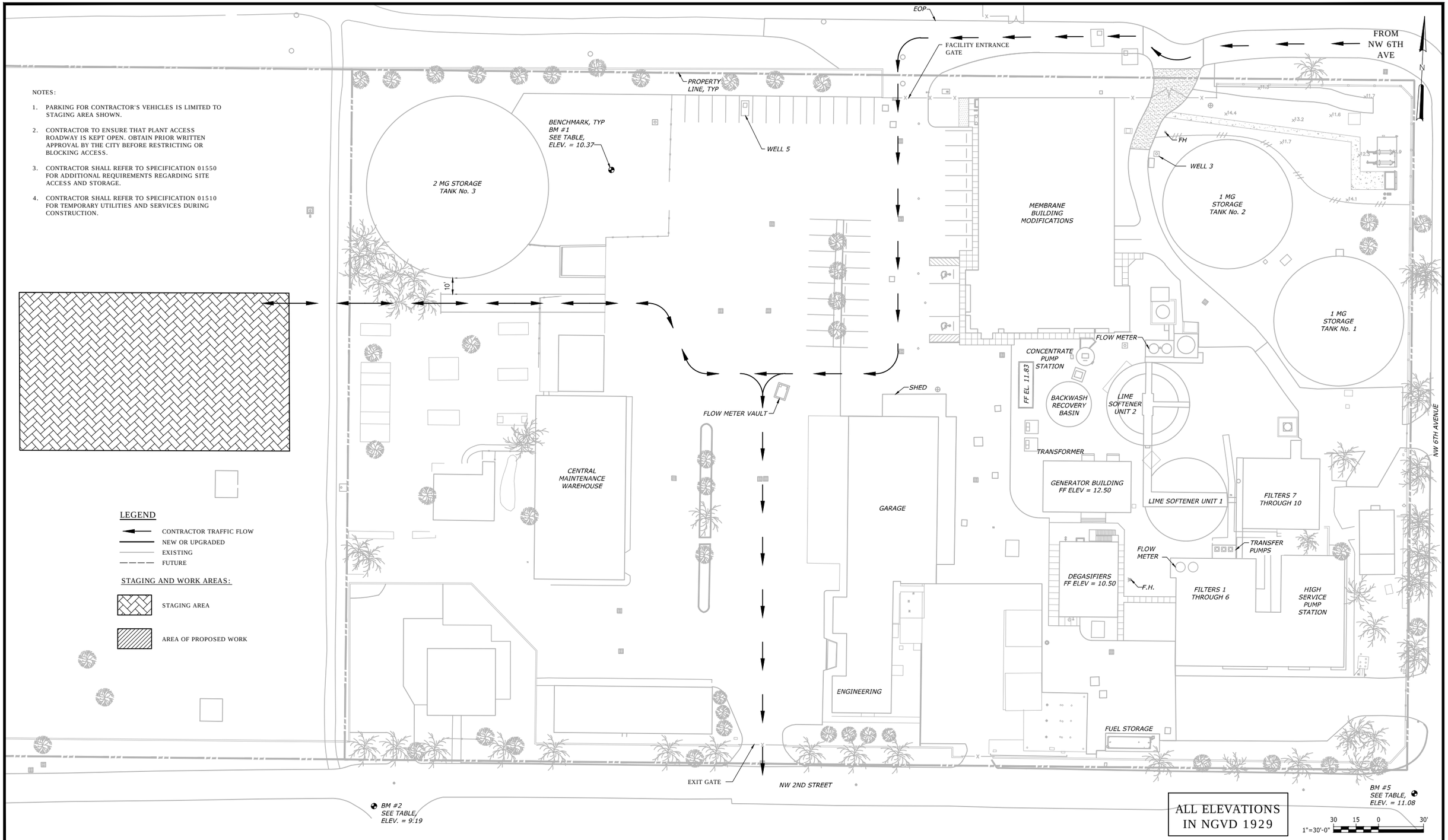

LEGEND

- CONTRACTOR TRAFFIC FLOW
- NEW OR UPGRADED
- EXISTING
- FUTURE

STAGING AND WORK AREAS:

- STAGING AREA
- AREA OF PROPOSED WORK

REV	ISSUED FOR	DATE	BY

PROJECT ENGINEER: -
DESIGNED BY: G.A.B.
DRAWN BY: G.B.
CHECKED BY:
IF THIS BAR DOES NOT MEASURE 1" THEN DRAWING IS NOT TO FULL SCALE 0 1/2" 1"

GEORGE A. BROWN, PE NO. 56076

Hazen

HAZEN AND SAWYER
4000 HOLLYWOOD BOULEVARD, SUITE 750N
HOLLYWOOD, FLORIDA 33021
CERTIFICATE OF AUTHORIZATION NO. : 2771

CITY OF HALLANDALE BEACH

WATER TREATMENT PLANT
HIGH SERVICE PUMP REPLACEMENT

Hallandale Beach
PROGRESS. INNOVATION. OPPORTUNITY

STAGING PLAN

DATE: SEPTEMBER 2017
HAZEN NO.: 40621-000
CONTRACT NO.: 1
DRAWING NUMBER: C-02

50% SUBMITTAL

File: H:\40621-000 HALLANDALE HIGH SERVICE PUMPS\DRAWINGS\Grid\C-02 Saved By: LAURA Save Date: 2017/08/09 3:04 PM
PLOT DATE: 2017/09/11 11:06:17 AM BY: LAURA

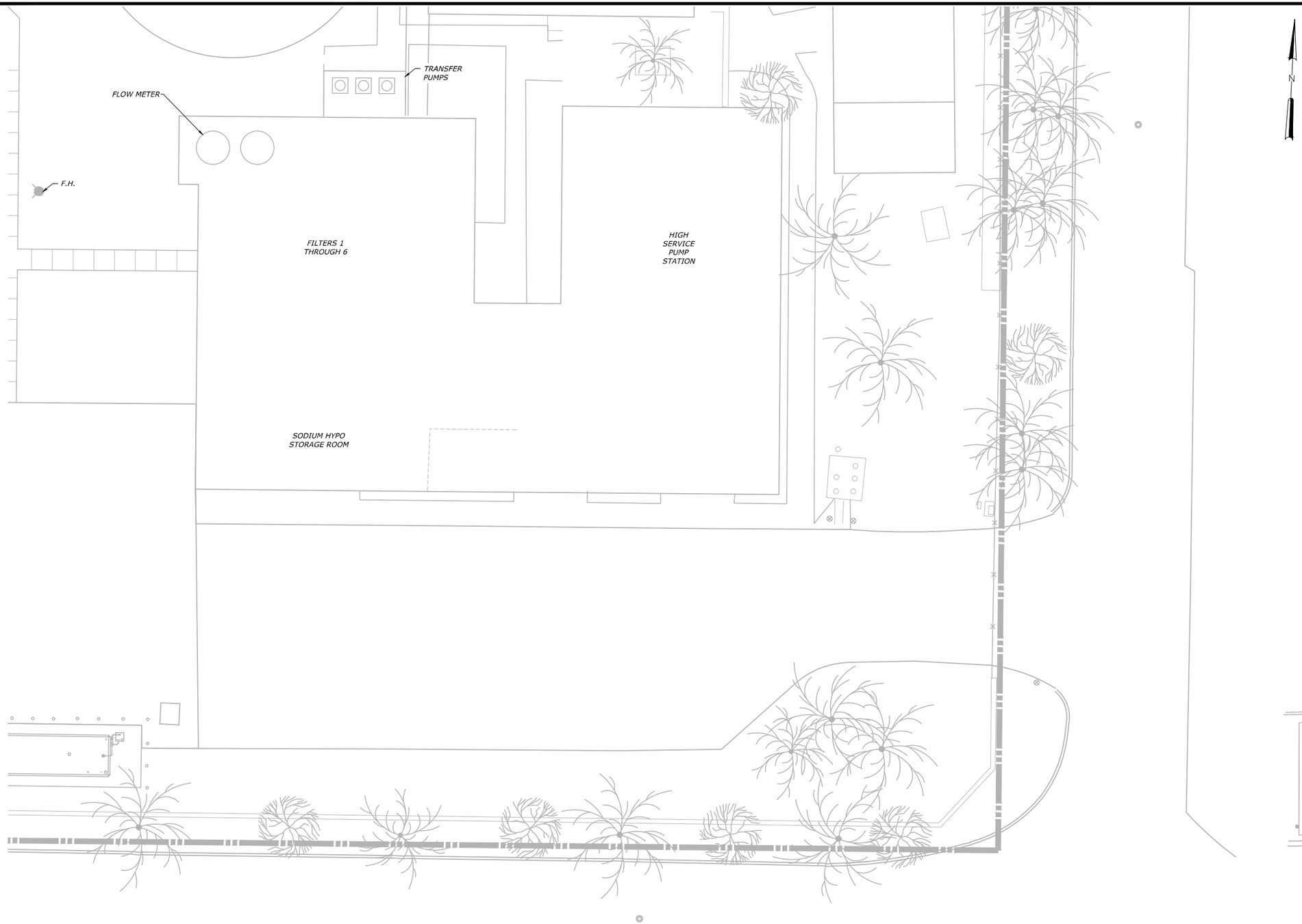

ALL ELEVATIONS IN NGVD 1929

LEGEND:

EXISTING

PROPOSED

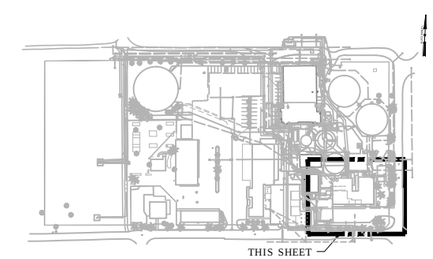

KEY MAP

1"=10'-0" 10 5 0 10'

REV	ISSUED FOR	DATE	BY

PROJECT ENGINEER: -

DESIGNED BY: G.A.B.

DRAWN BY: G.B.

CHECKED BY:

IF THIS BAR DOES NOT MEASURE 1" THEN DRAWING IS NOT TO FULL SCALE 0 1/2" 1"

GEORGE A. BROWN, PE NO. 56076

Hazen

HAZEN AND SAWYER
4000 HOLLYWOOD BOULEVARD, SUITE 750N
HOLLYWOOD, FLORIDA 33021
CERTIFICATE OF AUTHORIZATION NO. : 2771

CITY OF HALLANDALE BEACH

WATER TREATMENT PLANT
HIGH SERVICE PUMP REPLACEMENT

Hallandale Beach
PROGRESS. INNOVATION. OPPORTUNITY

PROPOSED SITE PLAN

DATE: SEPTEMBER 2017

HAZEN NO.: 40621-000

CONTRACT NO.: 1

DRAWING NUMBER: C-03

50% SUBMITTAL

File: H:\40621-000 HALLANDALE HIGH SERVICE PUMPS\DRAWINGS\CIVIL\C-03 Saved By LAURA Save Date: 2017/09/11 10:30 AM
PLOT DATE: 2017/09/11 11:09:43 AM BY: LAURA

1 MG STORAGE TANK No. 1

1 MG STORAGE TANK No. 2

EXISTING TANK LEVEL TRANSMITTER TO BE REMOVED AND REPLACED

SEE DRAWING C-05

WELL 3 AND 8" RW

FH

FLOW METER

WELL 2

LIME SOFTENER UNIT 2

LIME SOFTENER UNIT 1

FILTERS 7 THROUGH 10

HIGH SERVICE PUMP STATION

UTILITY TRANSFORMER VAULT

SODIUM HYPO PUMP ROOM

TRANSFER PUMPS

FILTERS 1 THROUGH 6

FLOW METER

FUEL STORAGE

GENERATOR BUILDING

DEGASIFIERS

BACKWASH RECOVERY BASIN

TRANSFORMER

EXIST CONCENTRATE PUMP STATION

MEMBRANE BUILDING

6 SS

GARAGE

N

KNOW WHAT'S BELOW ALWAYS CALL 811 BEFORE YOU DIG

It's fast. It's free. It's the law.

www.callsunshine.com

ALL ELEVATIONS IN NGVD 1929

LEGEND:

EXISTING

PROPOSED

THIS SHEET

KEY MAP

20 10 0 20'

1"=20'-0"

REV	ISSUED FOR	DATE	BY

PROJECT ENGINEER: -

DESIGNED BY: G.A.B.

DRAWN BY: G.B.

CHECKED BY:

IF THIS BAR DOES NOT MEASURE 1" THEN DRAWING IS NOT TO FULL SCALE 0 1/2" 1"

GEORGE A. BROWN, PE NO. 56076

Hazen

HAZEN AND SAWYER
4000 HOLLYWOOD BOULEVARD, SUITE 750N
HOLLYWOOD, FLORIDA 33021
CERTIFICATE OF AUTHORIZATION NO. : 2771

CITY OF HALLANDALE BEACH

WATER TREATMENT PLANT
HIGH SERVICE PUMP REPLACEMENT

Hallandale Beach
PROGRESS. INNOVATION. OPPORTUNITY.

YARD PIPING KEY MAP

DATE: SEPTEMBER 2017

HAZEN NO.: 40621-000

CONTRACT NO.: 1

DRAWING NUMBER: C-04

50% SUBMITTAL

File: H:\40621-000 HALLANDALE HIGH SERVICE PUMPS\DRAWINGS\Old\C-04 Saved By LAURA Save Date: 2017/08/09 2:47 PM
PLOT DATE: 2017/09/11 11:09:58 AM BY: LAURA

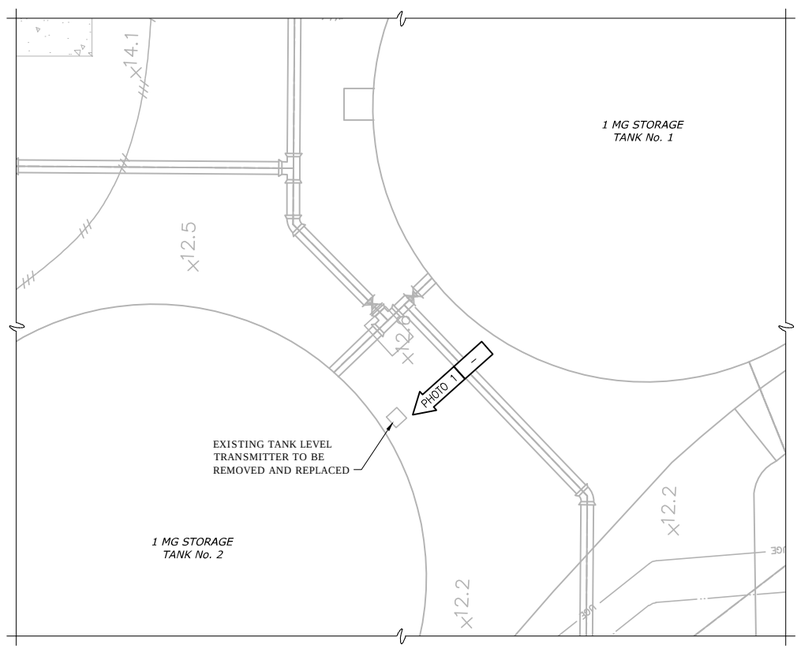

PLAN
1" = 1'-0"

STORAGE TANK LEVEL TRANSMITTER
PHOTO 1
NTS

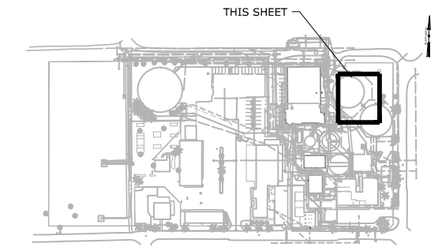

KEY MAP

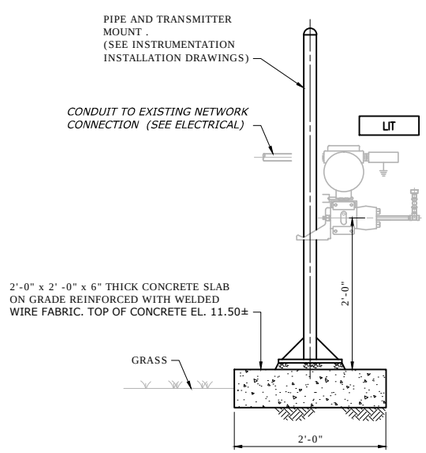

DETAIL 1
NTS -

KNOW WHAT'S BELOW
ALWAYS CALL 811
BEFORE YOU DIG
It's fast. It's free. It's the law.
www.callsunshine.com

ALL ELEVATIONS
IN NGVD 1929

LEGEND:

EXISTING

PROPOSED

DWG PHOTO # — ARROW SHOWS APPROXIMATE LOCATION AND DIRECTION OF PHOTOGRAPH

1"=1'-0" 12" 6 0 1'

REV	ISSUED FOR	DATE	BY

PROJECT ENGINEER: -
DESIGNED BY: G.A.B.
DRAWN BY: G.B.
CHECKED BY:
IF THIS BAR DOES NOT MEASURE 1" THEN DRAWING IS NOT TO FULL SCALE 0 1/2" 1"

GEORGE A. BROWN, PE NO. 56076

Hazen
HAZEN AND SAWYER
4000 HOLLYWOOD BOULEVARD, SUITE 750N
HOLLYWOOD, FLORIDA 33021
CERTIFICATE OF AUTHORIZATION NO. : 2771

CITY OF HALLANDALE BEACH

WATER TREATMENT PLANT
HIGH SERVICE PUMP REPLACEMENT

Hallandale Beach
PROSPERITY. INNOVATION. OPPORTUNITY

TANK LEVEL TRANSMITTER
REPLACEMENT

DATE: SEPTEMBER 2017
HAZEN NO.: 40621-000
CONTRACT NO.: 1
DRAWING NUMBER: C-05

50% SUBMITTAL

File: H:\40621-000 HALLANDALE HIGH SERVICE PUMPS\DRAWINGS\CIVIL\C-05 Saved By LAURA Save Date: 2017/08/11 10:56 AM
PLOT DATE: 2017/08/11 11:10:09 AM BY: LAURA

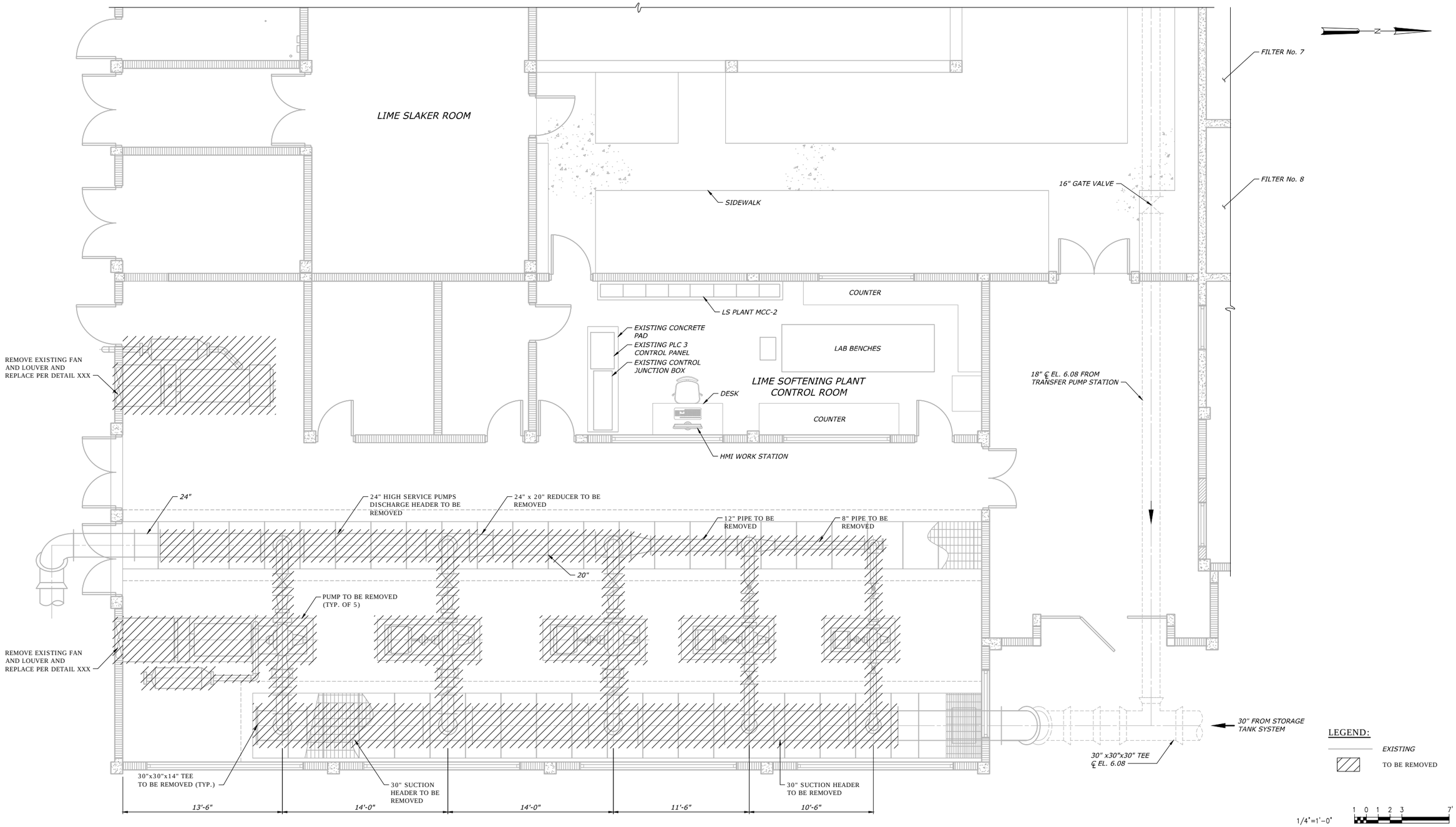

REV	ISSUED FOR	DATE	BY

PROJECT ENGINEER: -

DESIGNED BY: G.A.B.

DRAWN BY: G.B.

CHECKED BY:

IF THIS BAR DOES NOT MEASURE 1" THEN DRAWING IS NOT TO FULL SCALE 0 1/2" 1"

GEORGE A. BROWN, PE NO. 56076

Hazen

HAZEN AND SAWYER
4000 HOLLYWOOD BOULEVARD, SUITE 750N
HOLLYWOOD, FLORIDA 33021
CERTIFICATE OF AUTHORIZATION NO. : 2771

CITY OF HALLANDALE BEACH

WATER TREATMENT PLANT
HIGH SERVICE PUMP REPLACEMENT

Hallandale Beach
PROSPERITY. INNOVATION. OPPORTUNITY.

HIGH SERVICE PUMPS
DEMOLITION PLAN

DATE: SEPTEMBER 2017

HAZEN NO.: 40621-000

CONTRACT N0.: 1

DRAWING NUMBER: M-01

50% SUBMITTAL

File: H:\40621-000 HALLANDALE HIGH SERVICE PUMPS\DRAWINGS\MECH\M-01 Saved By LAURA Save Date: 2017/08/11 11:04 AM
PLOT DATE: 2017/08/11 11:10:18 AM BY: LAURA

PUMP ROOM - DEMO PHOTO 1
NTS

PUMP ROOM - DEMO PHOTO 2
NTS

PUMP ROOM - DEMO PHOTO 3
NTS

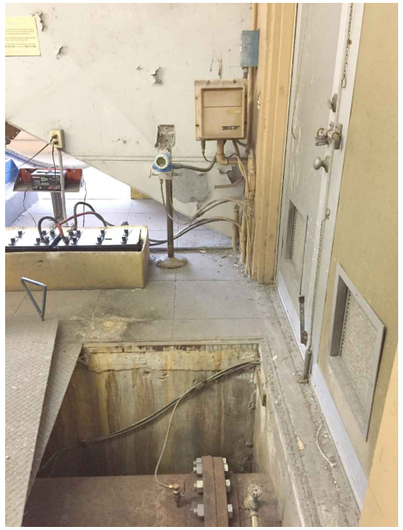

PUMP ROOM - DEMO PHOTO 4
NTS

PUMP ROOM - DEMO PHOTO 5
NTS

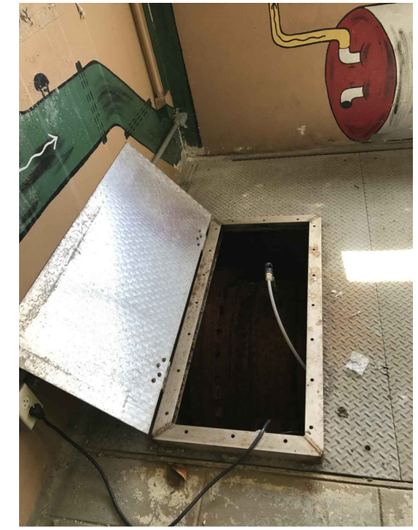

PUMP ROOM - DEMO PHOTO 6
NTS

REV	ISSUED FOR	DATE	BY

PROJECT ENGINEER:	-
DESIGNED BY:	F.A.M.
DRAWN BY:	G.K.
CHECKED BY:	
IF THIS BAR DOES NOT MEASURE 1" THEN DRAWING IS NOT TO FULL SCALE	0 1/2" 1"

GEORGE A. BROWN, PE NO. 56076

Hazen
HAZEN AND SAWYER
4000 HOLLYWOOD BOULEVARD, SUITE 750N
HOLLYWOOD, FLORIDA 33021
CERTIFICATE OF AUTHORIZATION NO. : 2771

CITY OF HALLANDALE BEACH

WATER TREATMENT PLANT
HIGH SERVICE PUMP REPLACEMENT

Hallandale Beach
PROGRESS. INNOVATION. OPPORTUNITY

HIGH SERVICE PUMPS
DEMOLITION PHOTOS
SHEET 1

DATE:	SEPTEMBER 2017
HAZEN NO.:	40621-000
CONTRACT N0.:	1
DRAWING NUMBER:	M-02

50% SUBMITTAL

File: H:\40621-000 HALLANDALE HIGH SERVICE PUMPS\DRAWINGS\MECH\M-02 Saved By: LAURA Save Date: 2017/09/10 11:59 AM
PLOT DATE: 2017/09/11 11:10:30 AM BY: LAURA

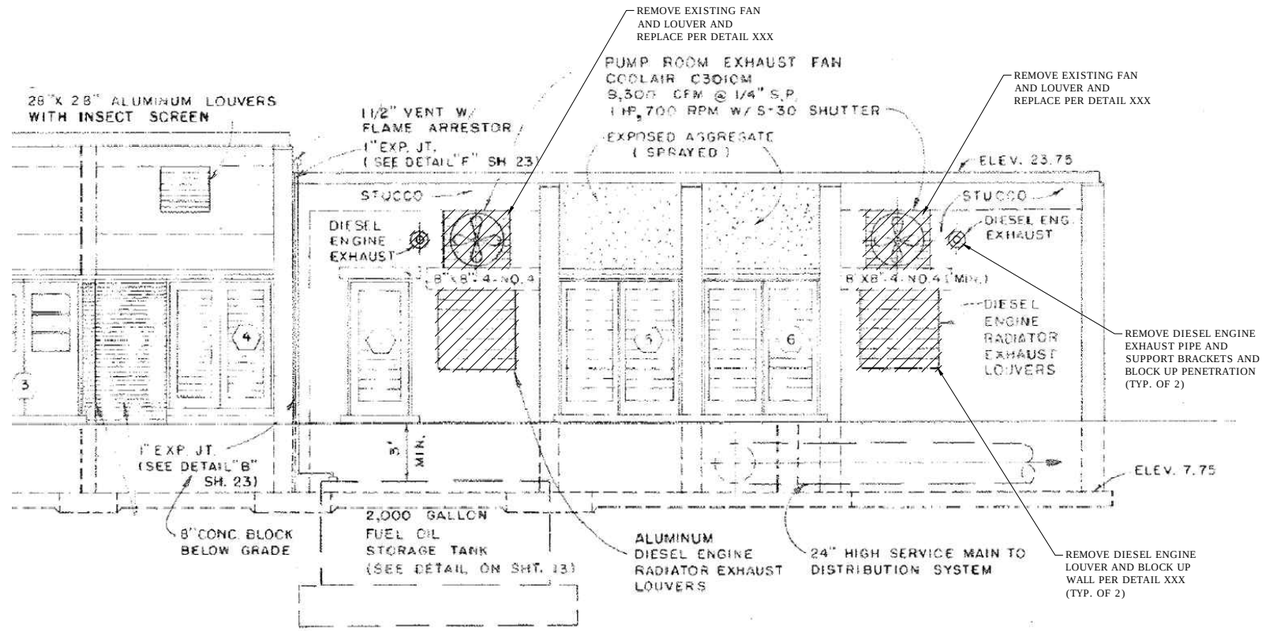

SOUTH ELEVATION

NTS

PUMP ROOM - DEMO PHOTO 7

NTS

HIGH SERVICE PUMP - DEMO PHOTO 8

NTS

LEGEND:

TO BE REMOVED

REV	ISSUED FOR	DATE	BY

PROJECT ENGINEER: -

DESIGNED BY: F.A.M.

DRAWN BY: G.K.

CHECKED BY:

IF THIS BAR DOES NOT MEASURE 1" THEN DRAWING IS NOT TO FULL SCALE 0 1/2" 1"

GEORGE A. BROWN, PE NO. 56076

Hazen

HAZEN AND SAWYER
4000 HOLLYWOOD BOULEVARD, SUITE 750N
HOLLYWOOD, FLORIDA 33021
CERTIFICATE OF AUTHORIZATION NO. : 2771

CITY OF HALLANDALE BEACH

WATER TREATMENT PLANT
HIGH SERVICE PUMP REPLACEMENT

Hallandale Beach
PROGRESS. INNOVATION. OPPORTUNITY

HIGH SERVICE PUMPS
DEMOLITION PHOTOS
SHEET 2

DATE: SEPTEMBER 2017

HAZEN NO.: 40621-000

CONTRACT N0.: 1

DRAWING NUMBER: M-03

50% SUBMITTAL

File: H:\40621-000 HALLANDALE HIGH SERVICE PUMPS\DRAWINGS\MECH\M-03 Saved By: LAURA Save Date: 2017/08/10 2:43 PM
PLOT DATE: 2017/08/11 11:15:39 AM BY: LAURA

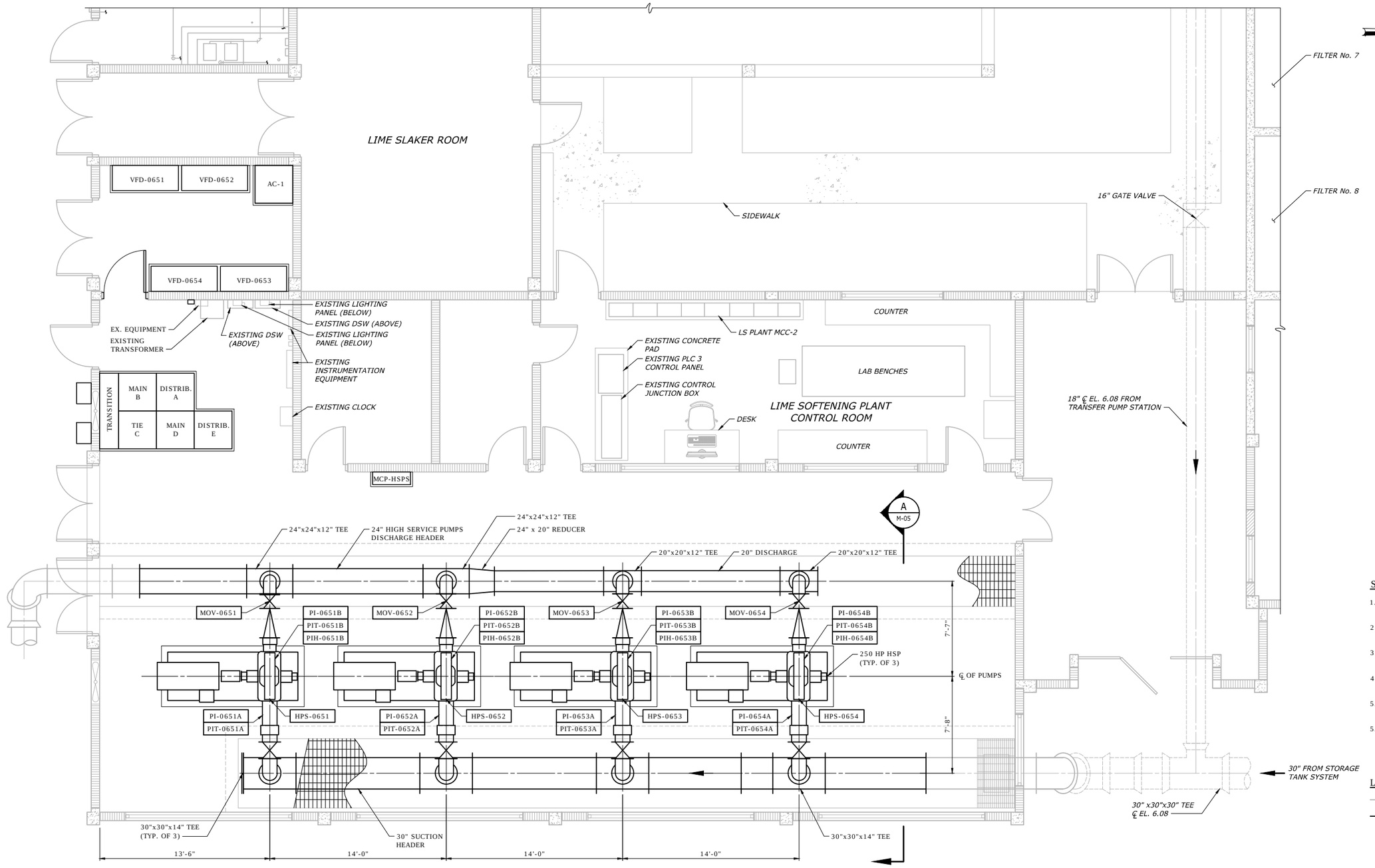

SCOPE OF WORK AT HSPS BUILDING:

1. THREE NEW HIGH SERVICE PUMPS AND PIPING REPLACEMENT.
2. REPLACEMENT OF EXISTING GRATING WITH NEW GRATING AT PIPE TRENCHES.
3. NEW ELECTRICAL AND CONTROLS FOR THREE NEW HIGH SERVICE PUMPS.
4. CONSTRUCTION OF NEW PARTITION WALL AT ELECTRICAL ROOM.
5. INSTALLATION OF NEW DOOR AT ELECTRICAL ROOM.
5. INSTALLATION OF A NEW AIR CONDITIONING SYSTEM AT ELECTRICAL ROOM.

LEGEND:

EXISTING

PROPOSED

1/4"=1'-0" 1 0 1 2 3 7'

REV	ISSUED FOR	DATE	BY

PROJECT ENGINEER: -
DESIGNED BY: G.A.B.
DRAWN BY: G.B.
CHECKED BY:
IF THIS BAR DOES NOT MEASURE 1" THEN DRAWING IS NOT TO FULL SCALE 0 1/2" 1"

GEORGE A. BROWN, PE NO. 56076

Hazen

HAZEN AND SAWYER
4000 HOLLYWOOD BOULEVARD, SUITE 750N
HOLLYWOOD, FLORIDA 33021
CERTIFICATE OF AUTHORIZATION NO. : 2771

CITY OF HALLANDALE BEACH

WATER TREATMENT PLANT
HIGH SERVICE PUMP REPLACEMENT

Hallandale Beach
PROGRESS, INNOVATION, OPPORTUNITY

HIGH SERVICE PUMPS
PROPOSED PLAN

DATE: SEPTEMBER 2017
HAZEN NO.: 40621-000
CONTRACT NO.: 1
DRAWING NUMBER: M-04

50% SUBMITTAL

File: H:\40621-000 HALLANDALE HIGH SERVICE PUMPS\DRAWINGS\MECH\M-04 Saved By LAURA Save Date: 2017/08/11 11:21 AM
PLOT DATE: 2017/08/11 11:22:33 AM BY: LAURA

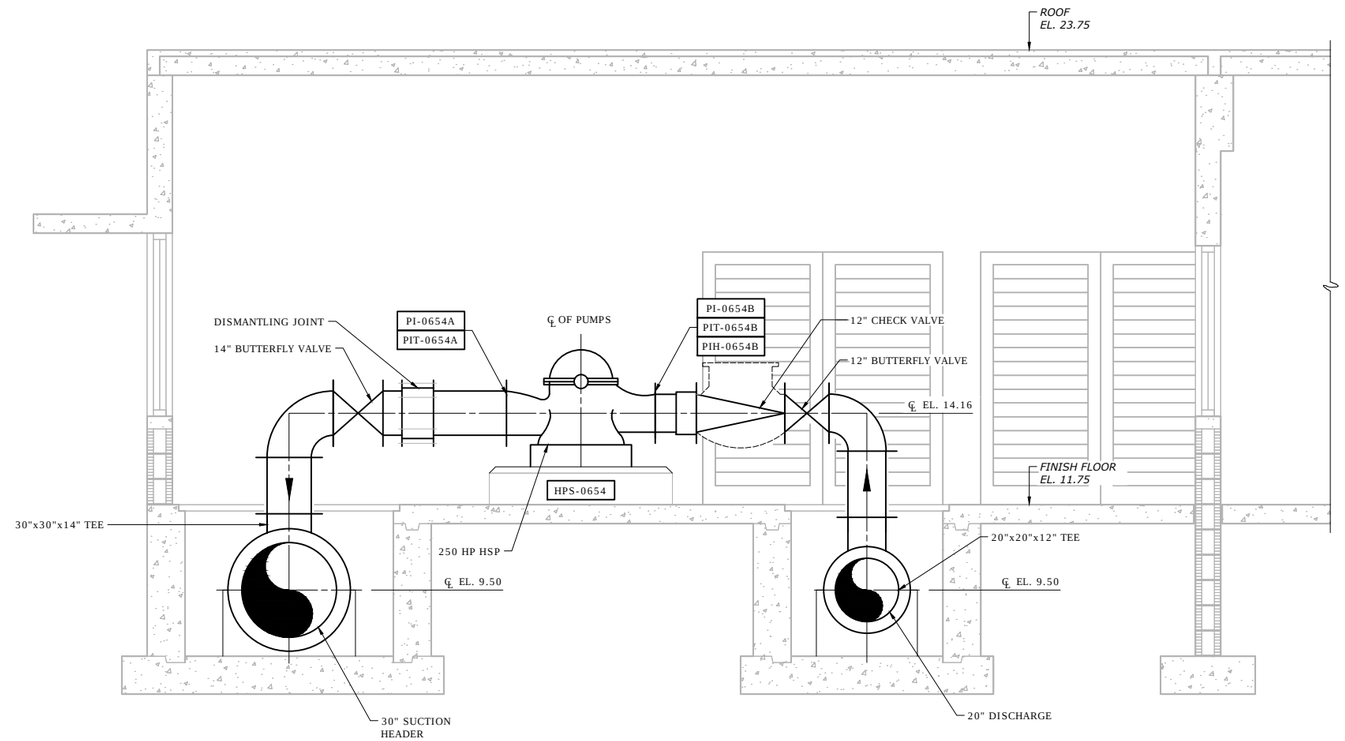

SECTION A / M-04
1/2" = 1'-0"

1/2"=1'-0" 12" 0 1 3'

REV	ISSUED FOR	DATE	BY

PROJECT ENGINEER: -
DESIGNED BY: F.A.M.
DRAWN BY: G.K.
CHECKED BY:
IF THIS BAR DOES NOT MEASURE 1" THEN DRAWING IS NOT TO FULL SCALE 0 1/2" 1"

GEORGE A. BROWN, PE NO. 56076

Hazen

HAZEN AND SAWYER
4000 HOLLYWOOD BOULEVARD, SUITE 750N
HOLLYWOOD, FLORIDA 33021
CERTIFICATE OF AUTHORIZATION NO. : 2771

CITY OF HALLANDALE BEACH

WATER TREATMENT PLANT
HIGH SERVICE PUMP REPLACEMENT

Hallandale Beach
PROGRESS. INNOVATION. OPPORTUNITY

HIGH SERVICE PUMPS
SECTION

DATE: SEPTEMBER 2017
HAZEN NO.: 40621-000
CONTRACT N0.: 1
DRAWING NUMBER: M-05

50% SUBMITTAL

File: H:\40621-000 HALLANDALE HIGH SERVICE PUMPS\DRAWINGS\MECH\M-05 Saved By CALL3 Save Date: 2017/08/11 9:52 AM
PLOT DATE: 2017/08/11 11:10:59 AM BY: LAURA

File: H:\40621-000 HALLANDALE HIGH SERVICE PUMPS\DRAWINGS\MECH\M-06 Saved By: LAURA Save Date: 2017/09/11 10:20 AM
PLOT DATE: 2017/09/11 11:11:05 AM BY: LAURA

REV	ISSUED FOR	DATE	BY

PROJECT ENGINEER:	-
DESIGNED BY:	F.A.M.
DRAWN BY:	G.K.
CHECKED BY:	
IF THIS BAR DOES NOT MEASURE 1" THEN DRAWING IS NOT TO FULL SCALE	0 1/2" 1"

GEORGE A. BROWN, PE NO. 56076

Hazen

HAZEN AND SAWYER
4000 HOLLYWOOD BOULEVARD, SUITE 750N
HOLLYWOOD, FLORIDA 33021
CERTIFICATE OF AUTHORIZATION NO. : 2771

CITY OF HALLANDALE BEACH

WATER TREATMENT PLANT
HIGH SERVICE PUMP REPLACEMENT

Hallandale Beach
PROGRESS, INNOVATION, OPPORTUNITY

XX

DATE:	SEPTEMBER 2017
HAZEN NO.:	40621-000
CONTRACT N0.:	1
DRAWING NUMBER:	M-06

50% SUBMITTAL

File: H:\40621-000 HALLANDALE HIGH SERVICE PUMPS\DRAWINGS\MECH\M-07 Saved By LAURA Save Date: 2017/09/11 10:19 AM
PLOT DATE: 2017/09/11 11:11:12 AM BY: LAURA

REV	ISSUED FOR	DATE	BY

PROJECT ENGINEER:	-
DESIGNED BY:	F.A.M.
DRAWN BY:	G.K.
CHECKED BY:	
IF THIS BAR DOES NOT MEASURE 1" THEN DRAWING IS NOT TO FULL SCALE	0 1/2" 1"

GEORGE A. BROWN, PE NO. 56076

Hazen

HAZEN AND SAWYER
4000 HOLLYWOOD BOULEVARD, SUITE 750N
HOLLYWOOD, FLORIDA 33021
CERTIFICATE OF AUTHORIZATION NO. : 2771

CITY OF HALLANDALE BEACH

WATER TREATMENT PLANT
HIGH SERVICE PUMP REPLACEMENT

Hallandale Beach
PROSPERITY, INNOVATION, OPPORTUNITY

XX

DATE:	SEPTEMBER 2017
HAZEN NO.:	40621-000
CONTRACT N0.:	1
DRAWING NUMBER:	M-07

50% SUBMITTAL

File: H:\40621-000 HALLANDALE HIGH SERVICE PUMPS\DRAWINGS\MECH\M-08 Saved By LAURA Save Date: 2017/09/11 10:19 AM
PLOT DATE: 2017/09/11 11:11:19 AM BY: LAURA

REV	ISSUED FOR	DATE	BY

PROJECT ENGINEER:	-
DESIGNED BY:	F.A.M.
DRAWN BY:	G.K.
CHECKED BY:	
IF THIS BAR DOES NOT MEASURE 1" THEN DRAWING IS NOT TO FULL SCALE	0 1/2" 1"

GEORGE A. BROWN, PE NO. 56076

Hazen

HAZEN AND SAWYER
4000 HOLLYWOOD BOULEVARD, SUITE 750N
HOLLYWOOD, FLORIDA 33021
CERTIFICATE OF AUTHORIZATION NO. : 2771

CITY OF HALLANDALE BEACH

WATER TREATMENT PLANT
HIGH SERVICE PUMP REPLACEMENT

Hallandale Beach
PROGRESS. INNOVATION. OPPORTUNITY

XX

DATE:	SEPTEMBER 2017
HAZEN NO.:	40621-000
CONTRACT N0.:	1
DRAWING NUMBER:	M-08

50% SUBMITTAL

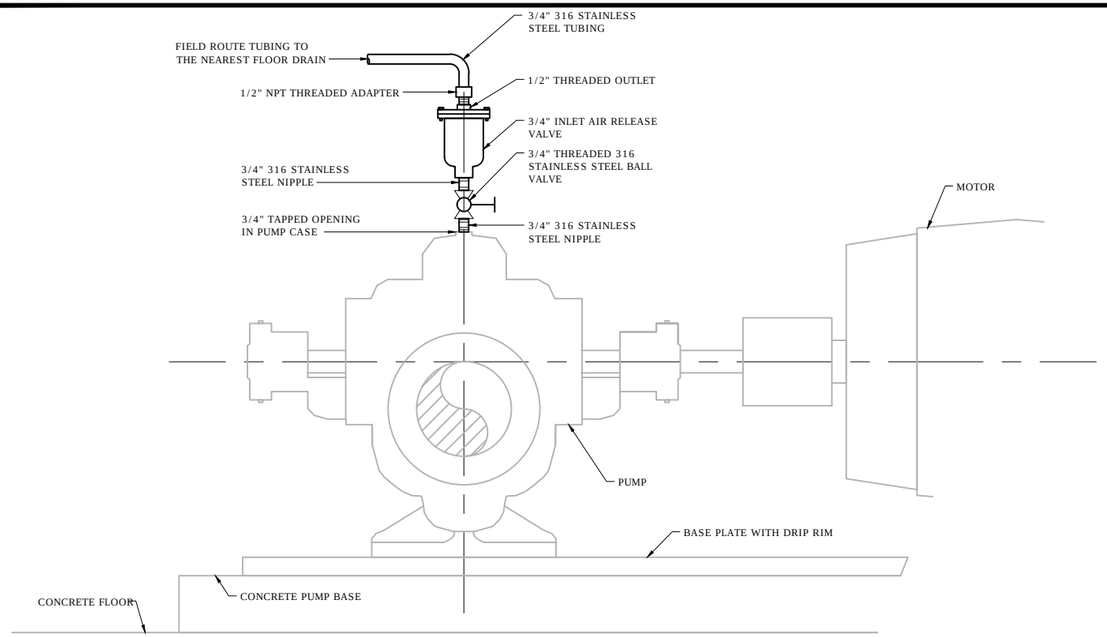

SEAL WATER FLUSING DRAIN

DETAIL 1
NTS -

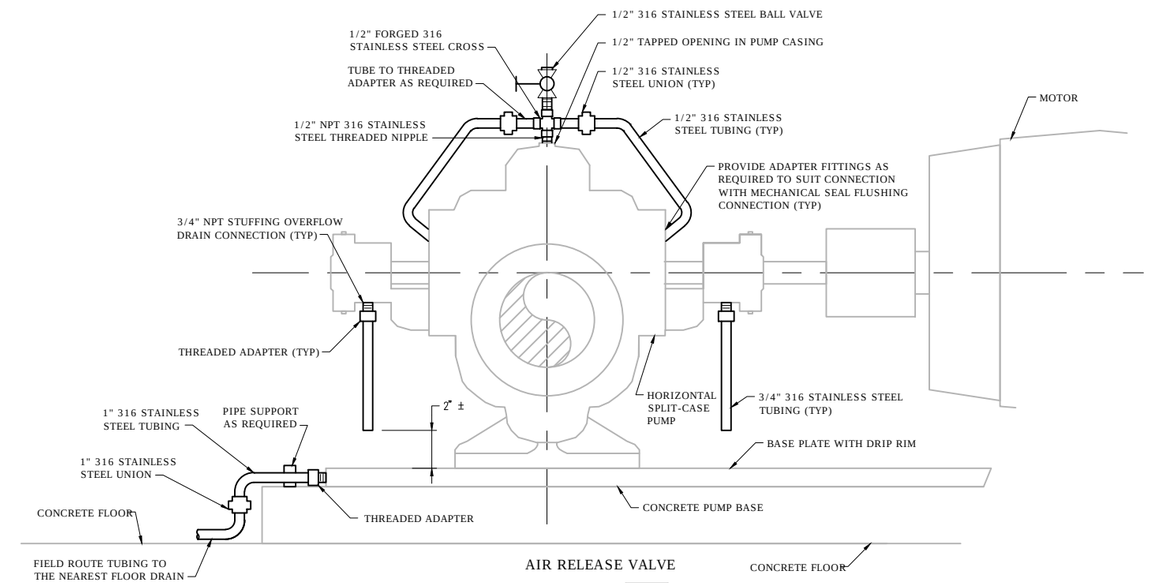

AIR RELEASE VALVE

DETAIL 2
NTS -

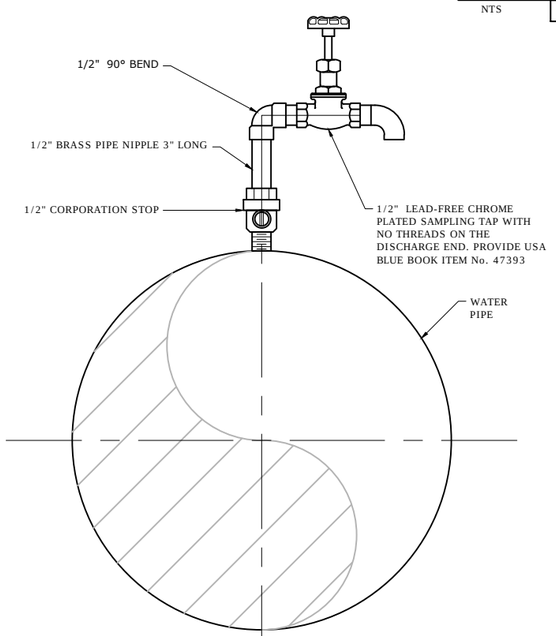

SAMPLE TAP

DETAIL 3
NTS -

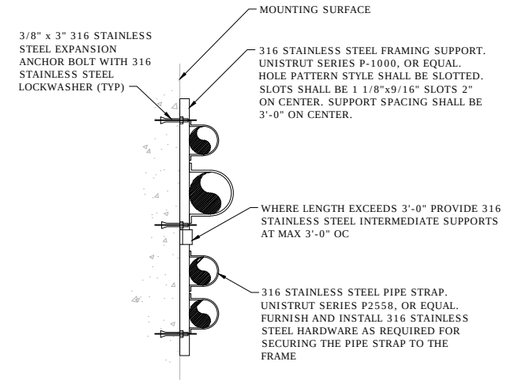

NOTES:

1. THIS DETAIL IS APPLICABLE TO VERTICAL AND HORIZONTAL SURFACES.
2. THIS DETAIL IS APPLICABLE FOR PIPE SIZES 3-INCH DIAMETER AND SMALLER.

FLUSH MOUNTED PIPE SUPPORT

DETAIL 4
NTS -

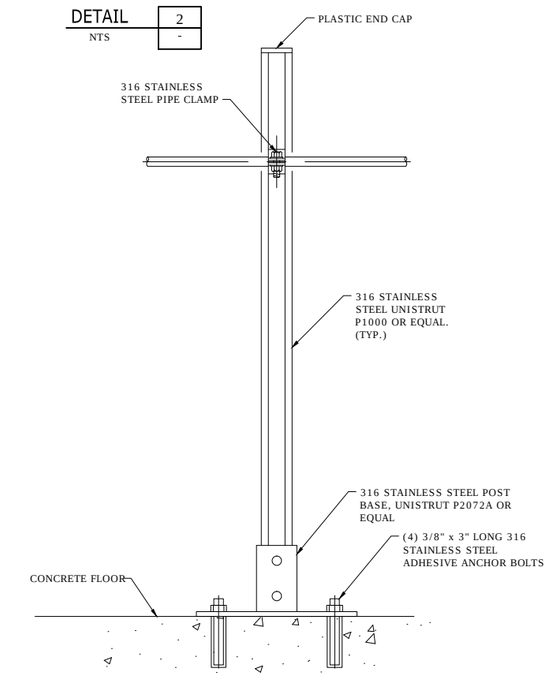

UNISTRUT POST - PIPE SUPPORT

DETAIL 5
NTS -

REV	ISSUED FOR	DATE	BY

PROJECT ENGINEER: -
DESIGNED BY: G.A.B.
DRAWN BY: G.B.
CHECKED BY:
IF THIS BAR DOES NOT MEASURE 1" THEN DRAWING IS NOT TO FULL SCALE 0 1/2" 1"

GEORGE A. BROWN, PE NO. 56076

Hazen
HAZEN AND SAWYER
4000 HOLLYWOOD BOULEVARD, SUITE 750N
HOLLYWOOD, FLORIDA 33021
CERTIFICATE OF AUTHORIZATION NO. : 2771

CITY OF HALLANDALE BEACH

WATER TREATMENT PLANT
HIGH SERVICE PUMP REPLACEMENT

Hallandale Beach
PROSPERITY, INNOVATION, OPPORTUNITY

MECHANICAL DETAILS
SHEET 1

DATE: SEPTEMBER 2017
HAZEN NO.: 40621-000
CONTRACT NO.: 1
DRAWING NUMBER: M-09

50% SUBMITTAL

File: H:\40621-000 HALLANDALE HIGH SERVICE PUMPS\DRAWINGS\MECH\M-09 Saved By LAURA Save Date: 2017/08/11 11:03 AM
PLOT DATE: 2017/08/11 11:11:28 AM BY: LAURA

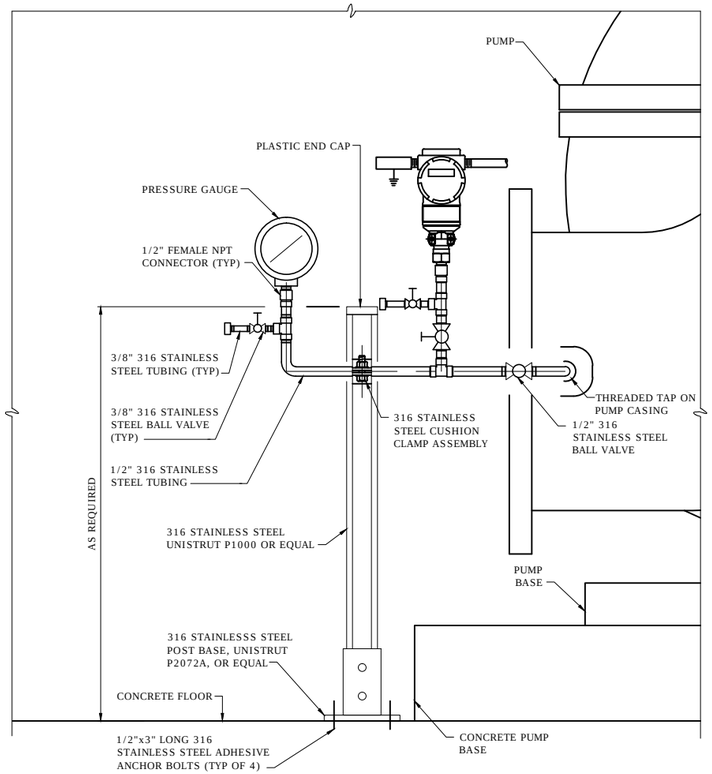

ELEVATION PUMP SUCTION

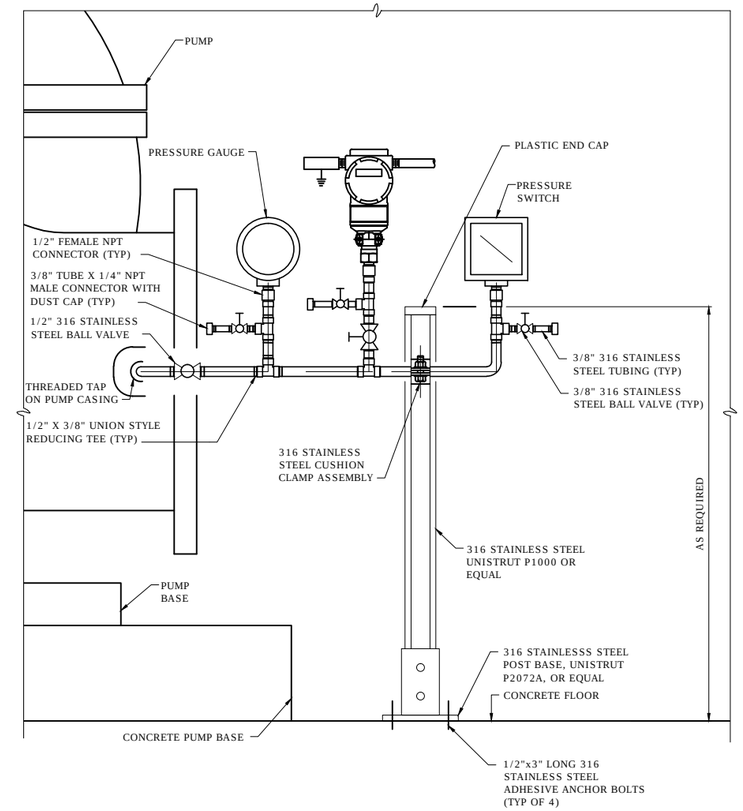

ELEVATION PUMP DISCHARGE

DETAIL	6
NTS	-

REV	ISSUED FOR	DATE	BY

PROJECT ENGINEER:	-
DESIGNED BY:	G.A.B.
DRAWN BY:	G.B.
CHECKED BY:	
IF THIS BAR DOES NOT MEASURE 1" THEN DRAWING IS NOT TO FULL SCALE	0 1/2" 1"

GEORGE A. BROWN, PE NO. 56076

Hazen

HAZEN AND SAWYER
4000 HOLLYWOOD BOULEVARD, SUITE 750N
HOLLYWOOD, FLORIDA 33021
CERTIFICATE OF AUTHORIZATION NO. : 2771

CITY OF HALLANDALE BEACH

WATER TREATMENT PLANT
HIGH SERVICE PUMP REPLACEMENT

Hallandale Beach
PROSPERITY, INNOVATION, OPPORTUNITY

MECHANICAL DETAILS
SHEET 1

DATE:	SEPTEMBER 2017
HAZEN NO.:	40621-000
CONTRACT NO.:	1
DRAWING NUMBER:	M-10

50% SUBMITTAL

File: H:\40621-000 HALLANDALE HIGH SERVICE PUMPS\DRAWINGS\MECH\M-10 Saved By: LAURA Save Date: 2017/09/11 10:59 AM
PLOT DATE: 2017/09/11 11:11:34 AM BY: LAURA

GENERAL STRUCTURAL NOTES

G-1 THESE NOTES ARE GENERAL AND SUPPLEMENT THE SPECIFICATIONS. THESE NOTES APPLY TO THE ENTIRE PROJECT UNLESS MODIFIED OR NOTED OTHERWISE IN THE CONTRACT DOCUMENTS.

G-2 STANDARD DETAILS SHALL BE USED WHEN REFERRED TO OR WHEN NO MORE RESTRICTIVE OR DIFFERENT DETAILS ARE SHOWN ON THE DRAWINGS.

G-3 DESIGN IS IN ACCORDANCE WITH AND CONSTRUCTION SHALL COMPLY WITH THE PROVISIONS OF THE 2014 FLORIDA BUILDING CODE. THE DESIGN LOADS AND OTHER DESIGN VALUES GIVEN IN NOTE G-4 WERE USED FOR DESIGN OF STRUCTURES UNLESS NOTED OTHERWISE ON THE DRAWINGS. SCOPE OF WORK IS CONSIDERED AN ALTERATION LEVEL 2 IN COMPLIANCE WITH THE PRESCRIPTIVE COMPLIANCE METHOD OF THE FLORIDA BUILDING CODE-EXISTING BUILDING.

G-4 LIVE LOADS:

STRUCTURE \ LEVEL	BOTTOM/FIRST FLOOR
HIGH SERVICE PUMP ROOM	300 PSF

-ALL STAIRWAYS, LANDINGS AND PLATFORMS ARE DESIGNED FOR A LIVE LOAD = 100 PSF UNLESS NOTED OTHERWISE.

G-5 ALL DIMENSIONS INDICATED (*) SHALL BE VERIFIED EITHER BY FIELD MEASUREMENTS FOR EXISTING STRUCTURES OR BY SHOP DRAWINGS FOR EQUIPMENT FURNISHED. STRUCTURAL DIMENSIONS NOT SHOWN BUT CONTROLLED BY OR RELATED TO EQUIPMENT SHALL BE VERIFIED BY THE CONTRACTOR WITH THE MANUFACTURER PRIOR TO CONSTRUCTION.

G-6 THE CONTRACTOR IS RESPONSIBLE FOR VERIFYING ALL EXISTING INFORMATION IN THE FIELD AS REQUIRED FOR NEW WORK

G-7 IF A CONFLICT IS FOUND BETWEEN DIFFERENT PORTIONS OF THE CONTRACT DOCUMENTS, THE CONTRACTOR SHALL NOTIFY THE ENGINEER IMMEDIATELY. CONTINUED CONSTRUCTION OF THE AREA IN CONFLICT SHALL BE AT THE CONTRACTOR'S OWN RISK UNTIL THE CONFLICT IS RESOLVED.

G-8 EQUIPMENT ANCHOR BOLT SIZES, TYPES, EMBEDMENT AND PATTERNS SHALL BE VERIFIED WITH THE MANUFACTURER. ALL BOLT PATTERNS SHALL BE TEMPLATED TO INSURE ACCURACY OF PLACEMENT.

G-9 STRUCTURAL DRAWINGS SHALL BE USED IN COORDINATION WITH THE DRAWINGS OF ALL OTHER DISCIPLINES AND MANUFACTURER'S SHOP DRAWINGS.

G-10 STRUCTURES HAVE BEEN DESIGNED FOR OPERATIONAL LOADS ON THE COMPLETED STRUCTURE. DURING CONSTRUCTION, THE STRUCTURES SHALL BE PROTECTED BY BRACING AND TEMPORARY SUPPORTS WHEREVER EXCESSIVE CONSTRUCTION LOADS MAY OCCUR. OVERSTRESSING OF ANY STRUCTURAL ELEMENT IS PROHIBITED.

STRUCTURAL METALS

M-1 DETAIL, FABRICATE, AND ERECT STRUCTURAL STEEL IN ACCORDANCE WITH AISC SPECIFICATION FOR STRUCTURAL STEEL BUILDINGS, AISC 360-05.

M-2 STEEL MATERIAL:
A) STRUCTURAL TUBING: ASTM A500, GRADE B OR A501 (42 KSI)
B) STRUCTURAL PIPE: ASTM A53, TYPE E OR S, GRADE B (35 KSI)
C) PLATES AND BARS: ASTM A36 UNO (36 KSI)
D) STRUCTURAL W SHAPES: ASTM A992 (50 KSI)
E) STRUCTURAL S, M, C,& L SHAPES: ASTM A36 (36 KSI)
F) STRUCTURAL HP SHAPES: ASTM A 572, GRADE 50 (50 KSI)

M-3 PROVIDE MINIMUM 3/4" DIAMETER ASTM A325 HIGH STRENGTH BOLTS WITH FULLY TIGHTENED TYPE N CONNECTIONS FOR STRUCTURAL STEEL UNLESS NOTED OTHERWISE.

M-4 PROVIDE TYPICAL STEEL BEAM CONNECTIONS FOR A CAPACITY OF NOT LESS THAN THE TOTAL UNIFORM LOAD CAPACITY TABULATED IN THE AISC TABLES FOR ALLOWABLE LOADS OF BEAMS UNLESS NOTED OTHERWISE.

M-5 DO NOT PAINT STEEL SURFACES WHICH ARE TO BE WELDED OR ARE TO BE ENCASED IN CONCRETE.

M-6 ALL STAINLESS STEEL FABRICATIONS SHALL BE TYPE 316, UNLESS NOTED OTHERWISE.

M-7 ALUMINUM SHALL BE ALLOY 6061-T6 UNLESS NOTED OTHERWISE.

M-8 ALL BOLTS, ANCHOR BOLTS, AND CONCRETE ANCHORS CONNECTING ALUMINUM SHALL BE TYPE 316 STAINLESS STEEL.

M-9 DETAIL, FABRICATE, AND ERECT ALUMINUM IN ACCORDANCE WITH THE LATEST EDITION OF THE ALUMINUM ASSOCIATION ALUMINUM DESIGN MANUAL.

M-10 ALUMINUM SHALL BE ISOLATED FROM CONTACT WITH CONCRETE AND DISSIMILAR METALS.

M-11 ALL GROOVE AND BUTT WELDS SHALL BE FULL PENETRATION.

M-12 FILLET WELD SIZES SHALL BE THE MINIMUM SIZE REQUIRED BY AISC CODE FOR PLATE SIZES TO BE CONNECTED AND SHALL BE APPLIED TO THE ENTIRE JOINT CONTACT LENGTH, BUT NOT LESS THAN 3/16".

M-13 BOTTOM SURFACES OF BASE PLATES SHALL BE GROUTED TO INSURE FULL BEARING CONTACT WITH CONCRETE SLAB.

M-14 WHENEVER ONE MEMBER IS FASTENED TO ANOTHER WITH FASTENINGS (BOLTS, WELDS, ETC.) SET AT A UNIFORM SPACING, THERE SHALL BE A MINIMUM OF TWO FASTENINGS PER PIECE CONNECTED AND THE FIRST AND LAST FASTENINGS SHALL BE LOCATED NOT TO EXCEED 0.25 OF FASTENER SPACING FROM EACH END.

M-15 BOLTED CONNECTIONS SHALL BE ASSEMBLED AND INSPECTED IN ACCORDANCE WITH RCSC SPECIFICATIONS FOR STRUCTURAL JOINTS USING ASTM A325 OR ASTM A490 BOLTS.

M-16 STRUCTURAL WELDED JOINTS SHALL CONFORM TO THE PROVISIONS OF AWS D1.1, STRUCTURAL WELDING CODE BY AMERICAN WELDING SOCIETY. PROOF OF WELDER CERTIFICATION SHALL BE AVAILABLE AT THE JOB SITE DURING TIMES OF INSPECTION.

M-17 SPECIAL INSPECTIONS SHALL BE IN ACCORDANCE WITH SPECIFICATIONS AND THE BUILDING CODE.

FOUNDATIONS

F-1 NO NEW STRUCTURES ARE PROPOSED FOR CONSTRUCTION UNDER THIS PROJECT.

F-2 ALLOWABLE SOIL BEARING PRESSURE

CONCRETE (CAST-IN-PLACE)

C-1 DESIGN OF CONCRETE ELEMENTS INCLUDING WALLS, FORMED SLABS, BEAMS, AND COLUMNS IS IN ACCORDANCE WITH ACI 318 (CODE REQUIREMENTS FOR STRUCTURAL CONCRETE) AND 350 (CODE REQUIREMENTS FOR ENVIRONMENTAL ENGINEERING CONCRETE STRUCTURES).

C-2 FOR CONCRETE MIX DESIGN SEE SPECIFICATION SECTION 03300.

C-3 CONCRETE STRENGTH CLASSES (28-DAY COMPRESSIVE STRENGTH):
A) CLASS A - (4,000 PSI) CLASS A STRUCTURAL CONCRETE SHALL BE USED IN ALL STRUCTURES UNLESS NOTED OTHERWISE.
B) CLASS B - (4,000 PSI) CLASS B STRUCTURAL CONCRETE SHALL BE USED AT LOCATIONS SHOWN OR APPROVED ON A CASE BY CASE BASIS.
C) CLASS C - (3,000 PSI) CLASS C CONCRETE SHALL BE USED IN ALL CURBS, GUTTERS, CATCH BASINS, FENCE AND GUARD POST EMBEDMENTS, ENCASEMENTS, AND ALL OTHER CONCRETE APPURTENANT TO ELECTRICAL FACILITIES UNLESS NOTED OTHERWISE. CLASS C CONCRETE SHALL ALSO BE USED FOR THRUST BLOCKS, PIPE TRENCH CUT-OFF BLOCKS AND CRADLES, MUDMATS AND CONCRETE FILLS WHERE THEY ARE UNREINFORCED.

C-4 ALL BAR REINFORCING SHALL CONFORM TO ASTM A615, GRADE 60, OR ASTM A706, GRADE 60 WHERE REINFORCEMENT IS TO BE WELDED IN ACCORDANCE WITH AWS D1.4. WELDED WIRE FABRIC SHALL CONFORM TO ASTM A185.

C-5 CONCRETE COVER FOR REINFORCING (UNLESS NOTED OTHERWISE ON THE DRAWINGS):
A) CONCRETE DEPOSITED DIRECTLY AGAINST SOIL: 3"
B) FORMED CONCRETE EXPOSED TO EARTH OR WEATHER
1. SLABS (#5 OR SMALLER) 1 1/2"
2. SLABS (#6 OR LARGER) 2"
3. WALLS 12" OR MORE 2"
4. WALLS LESS THAN 12" (#5 OR SMALLER) 1 1/2"
5. WALLS LESS THAN 12" (#6 OR LARGER) 2"
6. BEAMS AND COLUMNS (TO MAIN REINFORCEMENT) 2"
7. BEAMS AND COLUMNS (TO TIES OR STIRRUPS) 1 1/2"
8. FOR SURFACES EXPOSED TO WATER OR SEWAGE, ADD 1/2" TO ABOVE

C-6 SPLICES SHALL BE CLASS 'B' CONFORMING TO THE PROVISIONS OF ACI 318 UNLESS NOTED OTHERWISE.

C-7 CONSTRUCTION JOINTS SHALL BE LOCATED AS SHOWN ON THE DRAWINGS. CONSTRUCTION JOINTS NOT SHOWN SHALL BE SUBMITTED BY THE CONTRACTOR FOR THE APPROVAL OF THE ENGINEER PRIOR TO SUBMITTING REBAR SHOP DRAWINGS. VERTICAL CONSTRUCTION JOINTS IN WALLS AND HORIZONTAL JOINTS IN SLABS SHALL BE PROVIDED AT A SPACING NOT GREATER THAN 45 FEET ON CENTER. FOR EXPOSED WALLS WITH FLUID OR EARTH ON THE OPPOSITE SIDE, THE SPACING BETWEEN VERTICAL JOINTS SHALL BE A MAXIMUM OF 25 FEET.

C-8 WHERE HORIZONTAL CONSTRUCTION JOINTS, LOCATED ABOVE THE FOUNDATION SLAB, EXTEND BEYOND WHERE NEEDED, THEY SHALL BE TERMINATED AT A VERTICAL CONSTRUCTION JOINT APPROVED BY THE ENGINEER.

C-9 SLABS WITH SLOPING SURFACES SHALL HAVE THE INDICATED SLAB THICKNESS MAINTAINED AS THE MINIMUM. SLAB BOTTOMS CAN EITHER SLOPE WITH THE TOP SURFACE OR BE LEVEL. REINFORCEMENT IN SLABS WITH SLOPING SURFACES SHALL BE PLACED AT THE REQUIRED CLEARANCE FROM THE SLAB SURFACE.

C-10 ALL EXPOSED CORNERS SHALL HAVE A 3/4" CHAMFER OR A 1/2" RADIUS TOOLED CORNER.

C-11 EQUIPMENT SUPPORTS, ANCHORAGES, OPENINGS, RECESSES AND REVEALS NOT SHOWN ON THE STRUCTURAL DRAWINGS BUT REQUIRED BY OTHER CONTRACT DOCUMENTS, SHALL BE PROVIDED FOR PRIOR TO PLACING CONCRETE.

C-12 REINFORCING BARS AND ACCESSORIES SHALL NOT BE IN CONTACT WITH ANY METAL PIPE, PIPE FLANGE, METAL CONDUIT, OR OTHER METAL PARTS EMBEDDED IN CONCRETE. A MINIMUM CLEARANCE OF 2" SHALL BE PROVIDED.

C-13 DOWELS, ANCHOR BOLTS, PIPES, WATERSTOPS AND OTHER EMBEDDED ITEMS SHALL BE HELD SECURELY IN POSITION WHILE CONCRETE IS BEING PLACED.

C-14 CONDUITS AND OTHER SIMILAR ITEMS EMBEDDED IN OR PENETRATING THROUGH CONCRETE SHALL BE SPACED ON CENTER NOT LESS THAN 3 TIMES THEIR OUTSIDE DIMENSION, BUT NOT LESS THAN 2 1/2" CLEAR. WHEN SUCH ITEMS ARE EMBEDDED IN WALLS OR SLABS, THEY SHALL NOT OCCUPY MORE THAN 1/3 OF THE MEMBER THICKNESS.

C-15 AT ALL TYPICAL CURBS, EQUIPMENT PADS, AND PIPE SUPPORT PIERS, REINFORCING DOWELS SHOWN MAY BE REPLACED WITH MATCHING DOWELS SET IN EPOXY IN DRILLED HOLES AS SPECIFIED. DOWELS LOCATED CLOSER THAN 3" FROM ANY EDGE OF CONCRETE SHALL NOT BE REPLACED WITH DRILLED DOWELS.

C-16 DRILLED ADHESIVE DOWELS (WHERE DOWELS ARE SHOWN TO BE PLACED INTO HARDENED CONCRETE):
A) THE HOLE DIAMETER SHALL BE NO LARGER THAN 1/8" GREATER THAN THE DIAMETER OF THE REINFORCING BAR AT THE DEFORMATIONS.
B) THE DEPTH OF EMBEDMENT SHALL BE 12 BAR DIAMETERS, UNLESS NOTED OTHERWISE.
C) ADJUST THE DOWEL LOCATIONS AS NEEDED TO AVOID DRILLING THROUGH ANY REINFORCING BARS. IF THE LOCATION NEEDS TO BE MODIFIED, CONTACT THE ENGINEER.

C-17 CLEAR DISTANCE FROM ANCHOR BOLTS TO ANY CONCRETE EDGE SHALL BE 4" MINIMUM UNLESS NOTED OTHERWISE.

DEMOLITION

D-1 FOR DEMOLITION REQUIREMENTS, REFER TO SPECIFICATION 01540 - DEMOLITION AND REMOVAL OF EXISTING STRUCTURES AND EQUIPMENT.

D-2 CONCRETE DEMOLITION WITHIN STRUCTURES BEING MODIFIED SHALL BE SELECTIVE DEMOLITION BY CORE DRILLING OR SAWCUTTING AND CAREFUL REMOVAL OF CONCRETE SHOWN TO BE REMOVED. NO OVER CUTTING OF AREAS TO BE DEMOLISHED SHALL BE PERMITTED. CONTRACTOR SHALL CORE DRILL CORNERS OF OPENING PRIOR TO SAWCUTTING. EXPLOSIVES AND VIBRATORY HAMMERS SHALL NOT BE USED FOR DEMOLITION WORK.

D-3 UNLESS ANCHORING DEVICES AND/OR REINFORCEMENT IS NOTED TO REMAIN FOLLOWING DEMOLITION, REMOVE AND/OR BURN BACK ANCHORS AND REINFORCEMENT STEEL 1/2" MIN BELOW SURFACE. VOIDS CREATED SHALL BE FILLED WITH EPOXY RESIN BINDER.

D-4 WHERE DRAWINGS INDICATE A CONCRETE EQUIPMENT PAD TO BE DEMOLISHED, THE FLOOR SLAB SURFACE SHALL BE REPAIRED AS APPROVED BY ENGINEER. FOLLOWING SELECT DEMOLITION AND REMOVAL OF THE EQUIPMENT PAD REMOVAL THE REPAIR SHALL BE:
A. SAWCUT THE FLOOR AROUND THE EQUIPMENT PAD PERIMETER TO A DEPTH OF 1/4".
B. SCARIFY AND REMOVE SLAB CONCRETE WITHIN THE PERIMETER TO A NOMINAL 1/4" DEPTH CLEAN AND REMOVE ALL CONCRETE LAITANCE.
C. RESURFACE THE AREA BY APPLYING A POLYMER MODIFIED OR SILICA FUME ENHANCED CEMENTITIOUS REPAIR MORTAR, APPROVED BY THE ENGINEER, FOLLOWING THE MANUFACTURER'S SURFACE PREPARATION AND APPLICATION RECOMMENDATIONS. LEVEL AND FINISH THE SURFACE TO MATCH THE FLOOR SLAB SURROUNDING AREA.

D-5 CONCRETE SURFACES LEFT EXPOSED FOLLOWING DEMOLITION SHALL BE SEALED WITH EPOXY RESIN COATING SUCH AS "SIKAGARD" BY SIKA CORPORATION, "DURACOTE 240" BY TAMMS INDUSTRIES, OR APPROVED EQUAL.

D-6 A DETAILED CONSTRUCTION AND DEMOLITION PLAN SHALL BE SUBMITTED TO THE ENGINEER AND APPROVED BY THE ENGINEER AND OWNER PRIOR TO BEGINNING CONSTRUCTION. ANY SHUTDOWNS SHALL BE SUBMITTED TO, COORDINATED WITH, AND APPROVED BY THE OWNER. ONCE APPROVED, CONTRACTOR SHALL PROVIDE A MINIMUM OF 14 DAYS NOTICE TO OWNER PRIOR TO SHUTDOWN.

EXISTING INFORMATION

X-1 ALL EXISTING INFORMATION SHOWN ON THESE DRAWINGS INCLUDING LOCATION, DIMENSIONS, ELEVATIONS, AND CONFIGURATIONS IS DERIVED FROM RECORD DRAWINGS "WATERWORKS AND SANITARY SEWER EXTENTIONS FOR CITY OF HALLANDALE" JULY 1967, AND IS NOT GUARANTEED TO BE COMPLETE OR CORRECT. RECORD DRAWINGS ARE AVAILABLE FOR REVIEW AT THE CITY'S OFFICES.

X-2 ELEVATIONS IN RECORD DRAWINGS ARE BASED ON THE NATIONAL GEODETIC VERTICAL DATUM OF 1929. ELEVATIONS ON THESE DRAWINGS ARE BASED ON THE NATIONAL GEODETIC VERTICAL DATUM OF 1929.

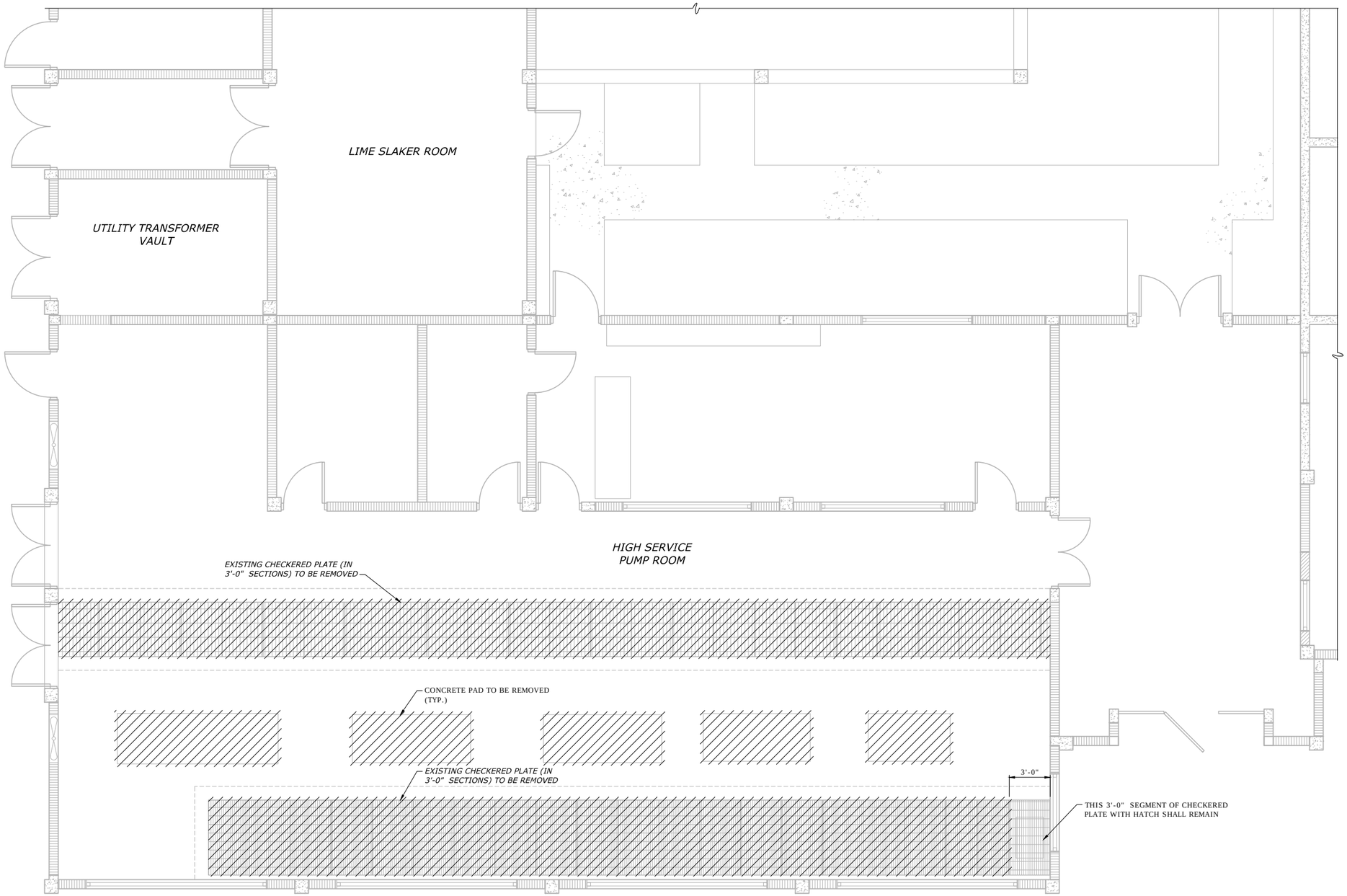

LEGEND:

EXISTING

TO BE REMOVED

1/4"=1'-0"

1 0 1 2 3 7'

REV	ISSUED FOR	DATE	BY

PROJECT ENGINEER:	-
DESIGNED BY:	G.A.B.
DRAWN BY:	G.B.
CHECKED BY:	
IF THIS BAR DOES NOT MEASURE 1" THEN DRAWING IS NOT TO FULL SCALE	0 1/2" 1"

GEORGE A. BROWN, PE NO. 56076

Hazen

HAZEN AND SAWYER
4000 HOLLYWOOD BOULEVARD, SUITE 750N
HOLLYWOOD, FLORIDA 33021
CERTIFICATE OF AUTHORIZATION NO. : 2771

CITY OF HALLANDALE BEACH

WATER TREATMENT PLANT
HIGH SERVICE PUMP REPLACEMENT

Hallandale Beach
PROSPERITY, INNOVATION, OPPORTUNITY

HIGH SERVICE PUMPS
DEMOLITION PLAN

DATE:	SEPTEMBER 2017
HAZEN NO.:	40621-000
CONTRACT NO.:	1
DRAWING NUMBER:	S-02

50% SUBMITTAL

File: H:\40621-000 HALLANDALE HIGH SERVICE PUMPS\DRAWINGS\STRUC\S-02 Saved By LAURA Save Date: 2017/08/11 10:10 AM
PLOT DATE: 2017/08/11 10:11:46 AM BY: LAURA

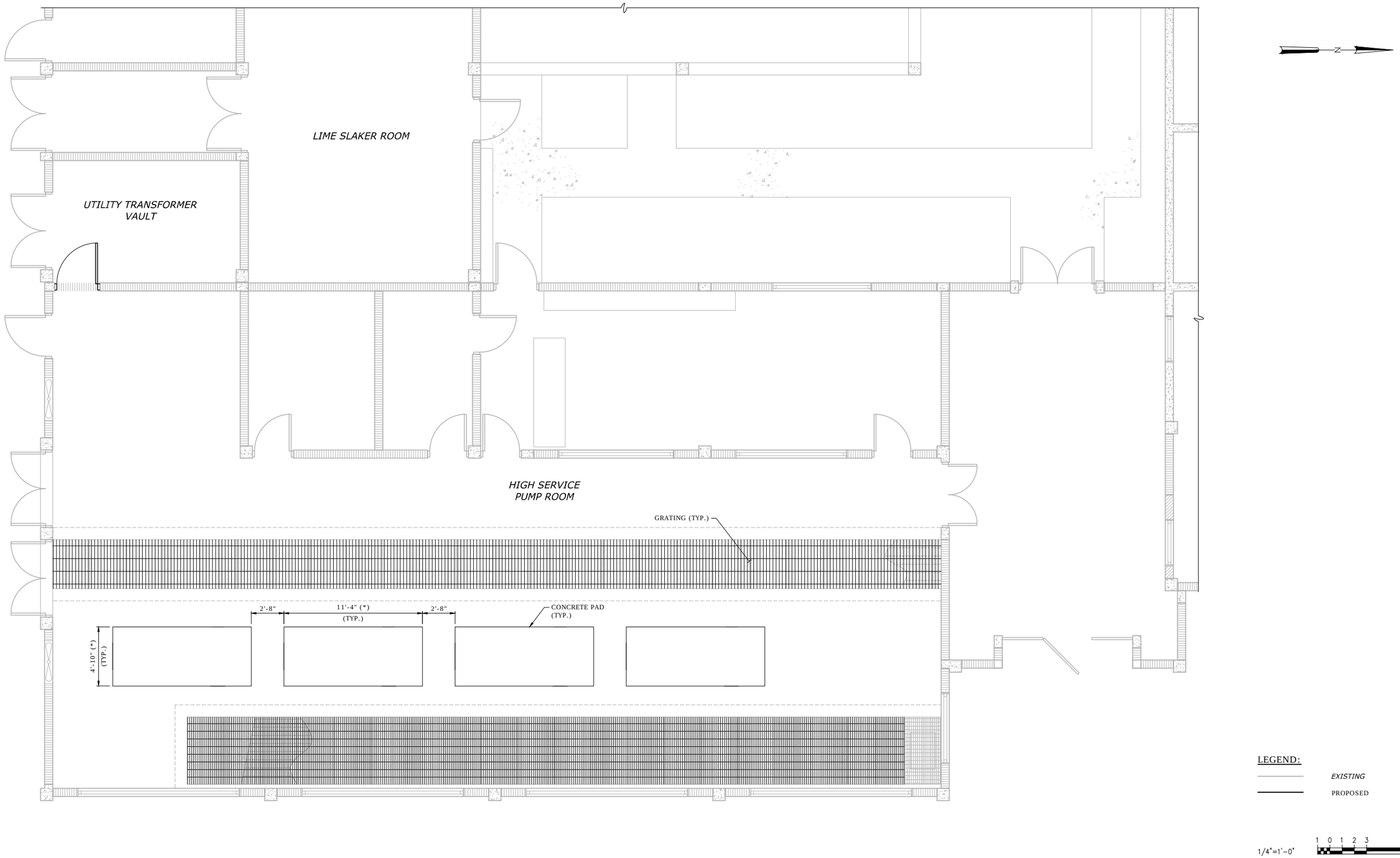

REV	ISSUED FOR	DATE	BY

PROJECT ENGINEER: -
DESIGNED BY: G.A.B.
DRAWN BY: G.B.
CHECKED BY:
IF THIS BAR DOES NOT MEASURE 1" THEN DRAWING IS NOT TO FULL SCALE 0 1/2" 1"

GEORGE A. BROWN, PE NO. 56076

Hazen

HAZEN AND SAWYER
4000 HOLLYWOOD BOULEVARD, SUITE 750N
HOLLYWOOD, FLORIDA 33021
CERTIFICATE OF AUTHORIZATION NO. : 2771

CITY OF HALLANDALE BEACH

WATER TREATMENT PLANT
HIGH SERVICE PUMP REPLACEMENT

Hallandale Beach
PROGRESS. INNOVATION. OPPORTUNITY.

HIGH SERVICE PUMPS
PROPOSED PLAN

DATE: SEPTEMBER 2017
HAZEN NO.: 40621-000
CONTRACT NO.: 1
DRAWING NUMBER: S-03

50% SUBMITTAL

File: H:\40621-000 HALLANDALE HIGH SERVICE PUMPS\DRAWINGS\STRUCT\S-03 Saved By: LAURA Save Date: 2017/08/10 9:50 AM
PLOT DATE: 2017/08/11 11:11:55 AM BY: LAURA

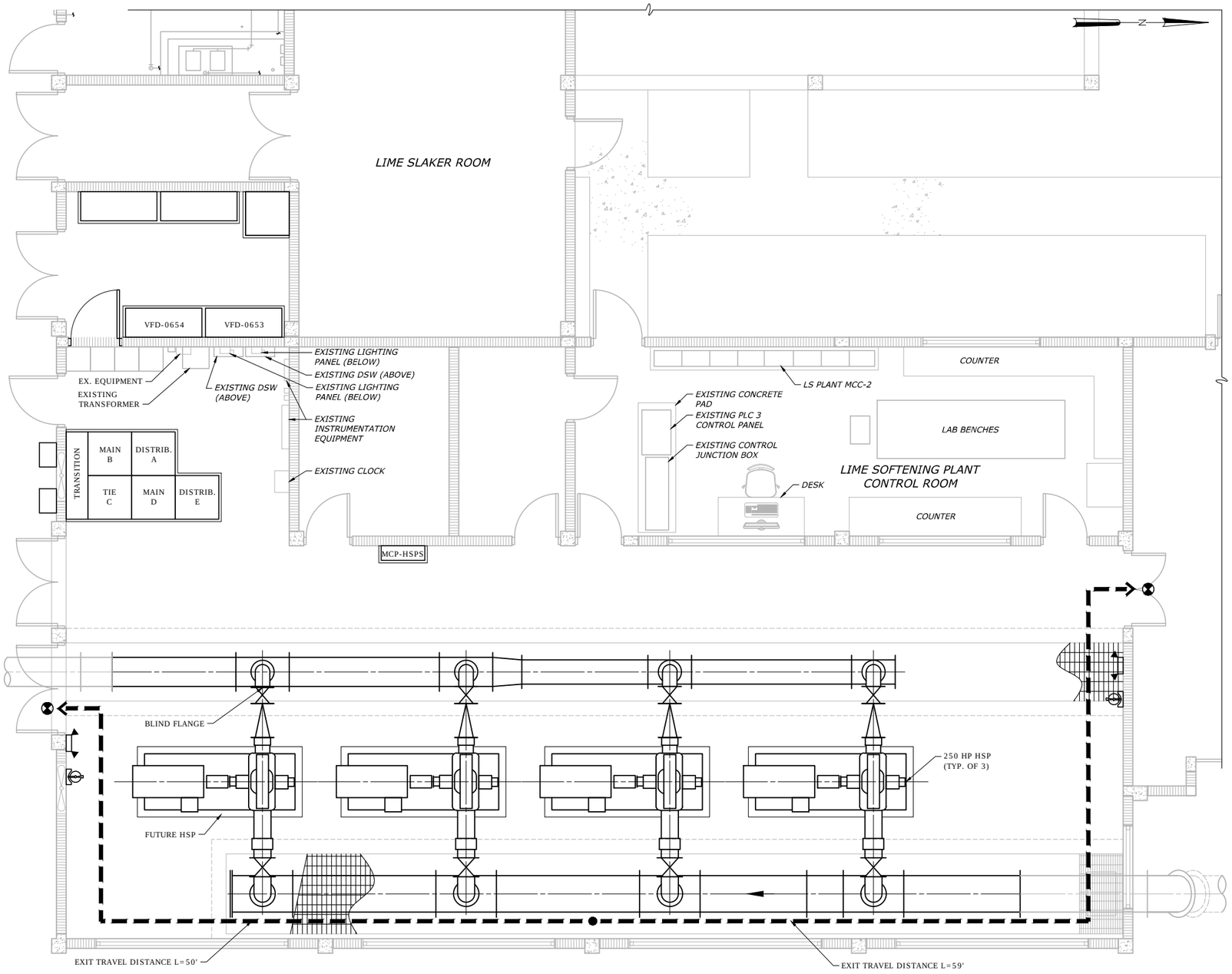

LIFE SAFETY ANALYSIS

CODE REQUIREMENTS

CATEGORY	FBC CHPTER	FBC REQUIREMENTS		FFPC CHAPTER	FFPC REQUIREMENTS	
OCCUPANCY	306.3	F-2, FACTORY INDUSTRIAL LOW-HAZARD (PER FBC306.3)		NFPA 101 40.1.4.1.2	SPECIAL-PURPOSE INDUSTRIAL	
CONSTRUCTION TYPE	602.2	TYPE II-B		NFPA 101 TABLE A8.2.1.1	TYPE II (000)	
	TABLE 503	MAXIMUM NUMBER OF STORIES	3			
		ACTUAL NUMBER OF STORIES	1			
		MAXIMUM AREA (PER FLOOR)	23000 SF			
		ACTUAL AREA	1,267 SF			
		MAXIMUM BUILDING HEIGHT	55 FT			
		ACTUAL BUILDING HEIGHT	13 FT			
OCUPANT LOAD	TABLE 1004.1.2	100 SF/OCCUPANT 945/100=9	9 OCCUP.	NFPA 101 TABLE 7.3.1.2	N/A	
EGRESS CAPACITY	1005.1	0.2 INCHES PER OCCUPANT AT DOORS 9X0.2=1.8	1.8 INCHES	NFPA 101 TABLE 7.3.3.1	0.2 INCHES PER OCCUPANT AT COMPONENTS	N/A
		0.3 INCHES PER OCCUPANT AT STAIRS	2.7 INCHES		0.3 INCHES PER OCCUPANT AT STAIRS	N/A
	1018.2 EXCEPTION 2	MINIMUM CORRIDOR WIDTH	36 INCHES		MINIMUM CORRIDOR WIDTH	36 INCHES
	1009.4 EXCEPTION 1	MINIMUM STAIR WIDTH	36 INCHES	NFPA 101 7.2.2.2.1.2	MINIMUM STAIR WIDTH	36 INCHES
	1008.1.1	MINIMUM CLEAR OPENING OF EXIT DOORS	32 INCHES	NFPA 101 7.2.1.2.3.2	MINIMUM DOOR OPENING	32 INCHES
EXIT ACCESS TRAVEL DISTANCE	TABLE 1016.2	MAXIMUM	300 FT	NFPA 101 TABLE 40.2.6	MAXIMUM	300 FT
COMMON PATH OF TRAVEL	1014.3	MAXIMUM	75 FT	NFPA 101 TABLE 40.2.5	MAXIMUM	50 FT
DEAD END CORRIDORS	1018.4	MAXIMUM	20 FT	NFPA 101 TABLE 40.2.5	MAXIMUM	50 FT
FIRE PROTECTION	TABLE 601 AND TABLE 602	STRUCTURAL FRAME	0 HR	NFPA 101 TABLE.2.1.2	STRUCTURAL FRAME	0 HR
		BEARING WALLS			BEARING WALLS	
		EXTERIOR	0 HR		EXTERIOR	0 HR
		INTERIOR	0 HR		INTERIOR	0 HR
		NON BEARING WALLS			NON BEARING WALLS	
		EXTERIOR (FIRE SEPARATION DISTANCE 5FT<X<100 FT)	N/A		EXTERIOR (FIRE SEPARATION DISTANCE >30 FT)	N/A
		INTERIOR	0 HR		INTERIOR	0 HR
		FLOOR CONSTRUCTION	0 HR		FLOOR CONSTRUCTION	0 HR
		ROOF CONSTRUCTION	0 HR		ROOF CONSTRUCTION	0 HR
	903.2	AUTO FIRE SPRINKLER	NR	NFPA 101 40.3.5	NR	

EXTINGUISHER REQUIREMENTS (NFPA 1, TABLE 13.6.8.2.1.1 UNLESS INDICATED OTHERWISE):

ITEM	AIR COMPRESSOR ROOM	ELECTRICAL ROOM
FIRE CLASS (PER NFPA 10, ARTICLE 5.2.1)	CLASS A	CLASS C
HAZARD CLASS (PER NFPA 10, ARTICLE 5.4.1.1)	LIGHT HAZARD	LIGHT HAZARD
MIN RATING	2-A	2-A
MAX FLOOR AREA (PER EXTINGUISHER)	11,250 SF	11,250 SF
MAX TRAVEL DISTANCE TO EXTINGUISHER	75 FT	75 FT
# OF EXTINGUISHERS NEEDED/ PROVIDED	1 / 1	1 / 1
RATING	3A:40B:C (ABC DRY CHEMICAL TYPE)	3A:40B:C (ABC DRY CHEMICAL TYPE)

LIFE SAFETY LEGEND

- ENTRANCE/EXIT
- DIRECTION OF TRAVEL
- DEAD END CORRIDOR
- FIRE EXTINGUISHER
- EMERGENCY LIGHT FIXTURE
- 1-HOUR FIRE RATED CMU WALL
- NON-FIRE RATED CMU WALL
- FIRE AUDIBLE & VISUAL ALARM
- EXIT SIGN
- EXIT SIGN WALLMOUNT
- FIRE ALARM PULL STATION WALL MOUNTED 48" A.F.F

REV	ISSUED FOR	DATE	BY

PROJECT ENGINEER: -
DESIGNED BY: G.A.B.
DRAWN BY: G.B.
CHECKED BY:
IF THIS BAR DOES NOT MEASURE 1" THEN DRAWING IS NOT TO FULL SCALE 0 1/2" 1"

JEAN PAUL SILA, PE No. 66522

Hazen
HAZEN AND SAWYER
4000 HOLLYWOOD BOULEVARD, SUITE 750N
HOLLYWOOD, FLORIDA 33021
CERTIFICATE OF AUTHORIZATION NO. : 2771

CITY OF HALLANDALE BEACH

WATER TREATMENT PLANT
HIGH SERVICE PUMP REPLACEMENT

Hallandale Beach
PROGRESS. INNOVATION. OPPORTUNITY

PUMP STATION
LIFE SAFETY PLAN

DATE: SEPTEMBER 2017
HAZEN NO.: 40621-000
CONTRACT N0.: 1
DRAWING NUMBER: A-01

50% SUBMITTAL

File: H:\40621-000 HALLANDALE HIGH SERVICE PUMPS\DRAWINGS\ARCH\A-01 Saved By: LAURA Save Date: 2017/08/11 10:23 AM
PLOT DATE: 2017/08/11 11:12:06 AM BY: LAURA

LIGHTING:

X DENOTES FIXTURE TYPE (TYP.)
SEE SPECIFICATION 16500 FOR FIXTURE SCHEDULE
# DENOTES CIRCUIT NUMBER (TYP.)

RECTANGULAR FIXTURE

LEFT: CEILING MOUNTED FIXTURE
RIGHT: WALL MOUNTED FIXTURE

EMERGENCY WALL-MOUNTED FIXTURE:
LEFT: STANDARD
RIGHT: REMOTE-HEAD

LEFT: CEILING MOUNTED EXIT SIGN
RIGHT: WALL MOUNTED EXIT SIGN
SHADED PORTION DENOTES SIGN FACE

POLE-MOUNTED FIXTURE

PHOTOCELL

LEFT: CEILING MOUNTED OCCUPANCY SENSOR
RIGHT: WALL MOUNTED OCCUPANCY SENSOR
X DENOTES TYPE

RECEPTACLES:

X DENOTES RECEPTACLE TYPE (TYP.):
GFCI DENOTES GROUND FAULT CIRCUIT INTERRUPT
UPS DENOTES UNINTERRUPTIBLE POWER SUPPLY
WPCR DENOTES WEATHERPROOF CORROSION RESISTANT
# DENOTES CIRCUIT NUMBER (TYP.)

RECEPTACLES:
LEFT: SIMPLEX
MIDDLE: DUPLEX
RIGHT: QUADRUPLEX

MULTI-OUTLET RECEPTACLE:
LEFT: SIMPLEX
RIGHT: DUPLEX

OTHER RECEPTACLES:
LEFT: 240 VOLT
RIGHT: SPECIAL PURPOSE

HVAC AND FIRE ALARM

FIRE ALARM CONTROL PANEL

FIRE ALARM ANNUNCIATOR PANEL

FIRE ALARM PULL STATION

FIRE ALARM INDICATOR:
X DENOTES ALERT TYPE (TYP.):
A DENOTES AUDIBLE
V DENOTES VISIBLE (# DENOTES STROBE INTENSITY)

FIRE ALARM INDICATOR MOUNTED
ABOVE A FIRE ALARM PULL
STATION

DUCT DETECTOR

SMOKE DETECTOR:
X DENOTES TYPE:
Z DENOTES IONIZATION
P DENOTES PHOTOELECTRIC
T DENOTES THERMAL

HEAT DETECTOR

THERMOSTAT

AMBIENT TEMPERATURE TRANSMITTER

SWITCHES

WALL SWITCH:
X DENOTES TYPE:
NO SUBSCRIPT DENOTES SINGLE-POLE SWITCH
3 DENOTES 3-WAY SWITCH
4 DENOTES 4-WAY SWITCH
M DENOTES MANUAL MOTOR STARTER
# DENOTES CIRCUIT NUMBER
WPCR DENOTES WEATHERPROOF CORROSION RESISTANT

COMBINATION MOTOR STARTER

DISCONNECT SWITCH

LOCAL CONTROL STATION

ELEMENTARY CONTROL SCHEMATICS

3-POSITION SELECTOR SWITCH:
HOA DENOTES HAND/OFF/AUTO
LOR DENOTES LOCAL/OFF/REMOTE
FOR DENOTES FORWARD/OFF/REVERSE

PUSHBUTTON SWITCHES:
LEFT: N.O.
RIGHT: N.C.
TEXT DENOTES LEGEND PLATE

EMERGENCY STOP MUSHROOM HEAD PUSHBUTTON SWITCH (N.C.):
TEXT DENOTES LEGEND PLATE

PUSHBUTTON SWITCH N.C. WITH LOCK-OUT:
TEXT DENOTES LEGEND PLATE

SELECTOR SWITCH:
LEFT: STANDARD
RIGHT: SPRING-RETURN
TEXT DENOTES LEGEND PLATE

SOLID-STATE OVERLOAD RELAY

THERMAL OVERLOAD RELAY

	NO	NC
DISCONNECT SWITCHES		
CONTACTS	X	X
TORQUE SWITCH	–	NS
LIMIT SWITCHES	LS	LS

NOTATION LEGEND:
NO/NC: NORMALLY OPEN/CLOSED
RO/RC: RISE-TO-OPEN/CLOSE
FO/FC: FALL-TO-OPEN/CLOSE
TO/TC: TIME-OPEN/CLOSE

CONTACTS:
TEXT DENOTES COIL ID

SWITCHES:
TEXT DENOTES TAG NUMBER

	NORC	NOFC	NCRO	NCFO
TEMPERATURE SWITCHES/ THERMOSTATS	TS	–	TS	–
PRESSURE SWITCHES	PS	PS	PS	PS
LEVEL SWITCHES	LS	LS	LS	LS
FLOW SWITCHES	FS	FS	FS	FS

	NOTC	NOTO	NCTO	NCTC
TIME DELAY SWITCHES	TD	TD	TD	TD

INDICATOR LIGHT:
LEFT: STANDARD/RIGHT: PUSH-TO-TEST
X DENOTES COLOR

RUN TIME METER

SOLENOID VALVE

MOTOR PROTECTION RELAY

CPT 480/120VAC — CONTROL POWER TRANSFORMER

MECHANICAL INTERLOCK CONNECTION

MOTOR SPACE HEATER

COIL:
X DENOTES TYPE:
M DENOTES MOTOR STARTER
CR DENOTES CONTROL RELAY
TD DENOTES TIME DELAY RELAY
TR DENOTES TIMER RANGE
TS DENOTES TIMER SETPOINT
PR DENOTES INTERPOSING PILOT RELAY
LC DENOTES LIGHTING CONTACTOR
Y DENOTES REFERENCE LINE NUMBER

EQUIPMENT/DEVICE LOCATION SYMBOLS

LOCATED IN MCC

LOCATED IN STAND-ALONE MOTOR STARTER/CONTROLLER

LOCATED IN FIELD

LOCATED AT PANEL:
X DENOTES PANEL ID:
L DENOTES LOCAL CONTROL STATION

SINGLE-LINE DIAGRAMS

XFMR
kVA
480-120/208V
3P/4W
DRY TRANS
TRANSFORMER

PROTECTIVE RELAY:
NUMBER DENOTES IEEE DEVICE FUNCTION

MOTOR AND TYPICAL ADDITIONAL DEVICES:
TSH: TEMPERATURE SWITCH
MSH: MOTOR SPACE HEATER
CF: COOLING FAN
TE: TEMPERATURE ELEMENT
ME: MOISTURE DETECTOR

INSTRUMENT TAG:
X DENOTES INSTRUMENT TYPE
Y DENOTES INSTRUMENT NUMBER
SEE DRAWING I1 FOR INSTRUMENT ABBREVIATIONS

100A — FUSE

100A 3P — FUSED DISCONNECT SWITCH

30A 3P — DISCONNECT SWITCH

30A 3P — FUSED DISCONNECT SWITCH

LOW-VOLTAGE POWER CIRCUIT BREAKER:
LEFT: FIXED-MOUNT
RIGHT: DRAWOUT
E.O. DENOTES ELECTRICALLY OPERATED
LSIG DENOTES INSTALLED TRIP FUNCTIONS:
L DENOTES LONG-TIME
S DENOTES SHORT-TIME
I DENOTES INSTANTANEOUS
G DENOTES GROUND FAULT
Z DENOTES ZONE-SELECTIVE INTERLOCKING
CTR DENOTES BREAKER-SPECIFIC CT AND RATIOS

MEDIUM-VOLTAGE DRAWOUT POWER CIRCUIT BREAKER:
E.O. DENOTES ELECTRICALLY OPERATED
BATT. DENOTES BATTERY BACKUP POWER

LOW-VOLTAGE MOLDED CASE CIRCUIT BREAKER
LEFT: THERMAL-MAGNETIC TRIP UNIT
RIGHT: ELECTRONIC TRIP UNIT

30A MCP — MOTOR CIRCUIT PROTECTOR

GROUND

600:5 (3) — CT:
NUMBERS DENOTE CT WINDING RATIO AND CT QUANTITY

50:5 (1) — GFCT:
NUMBERS DENOTE GFCT WINDING RATIO AND GFCT QUANTITY

480:120 (3) — PT:
NUMBERS DENOTE PT WINDING VOLTAGES AND PT QUANTITY

DRAW-OUT ELEMENT

LEFT: PANELBOARD
RIGHT: COMBINATION POWER UNIT
X DENOTES PANEL ID

LIGHTNING ARRESTOR

SINGLE-LINE DIAGRAMS, CONT'D.

LEFT: RESISTOR
RIGHT: LINE REACTOR:
#% DENOTES IMPEDANCE

CAPACITOR

SHUNT TRIP

SURGE PROTECTIVE DEVICE

KIRK-KEY INTERLOCK

LEFT: FVNR STARTER:
X DENOTES NEMA SIZE
DP DENOTES DEFINITE PURPOSE CONTACTOR
RIGHT: FVR STARTER

LEFT: VFD WITH LINE REACTOR
MIDDLE: VFD WITH HARMONIC FILTER
RIGHT: VFD WITH LINE REACTOR AND FVNR BYPASS
X DENOTES NEMA SIZE

LEFT: RVSS STARTER
RIGHT: RVSS STARTER WITH FVNR BYPASS
X DENOTES NEMA SIZE

VFD WITH RVSS BYPASS

RVAT STARTER:
X DENOTES NEMA SIZE
#% DENOTES TAP SETTING

SINGLE-LINE DIAGRAMS, CONT'D.

GENERATOR

CONTACTOR-STYLE ATS OR MTS

CONTACTOR-STYLE ATS OR MTS WITH OFF POSITION

CONTACTOR-STYLE ATS OR MTS, SERVICE-ENTRANCE RATED

MCCB-STYLE ATS OR MTS

DRAWOUT CB-STYLE ATS OR MTS

MISC PLAN VIEW SYMBOLS

EQUIPMENT CONNECTION

GROUND RODS:
LEFT: BURIED
RIGHT: IN TESTWELL

DUCTBANK SECTION CUT IDENTIFIER:
DBXX DENOTES DUCTBANK ID
EXX DENOTES DRAWING NUMBER
WHERE SECTION CUT IS LOCATED

DUCTBANK TAG:
X DENOTES DUCTBANK ID

CABLE TRAY TAG:
X DENOTES CABLE TRAY ID
Y DENOTES SCHEDULE REFERENCE

INSTRUMENT TAG:
X DENOTES INSTRUMENT TYPE
# DENOTES INSTRUMENT NUMBER
SEE DRAWING I1 FOR INSTRUMENT ABBREVIATIONS

CONDUIT TAGS:
P DENOTES POWER
C DENOTES CONTROL
I DENOTES INSTRUMENTATION
XXXX DENOTES CONDUIT ID
XXX-XXX DENOTES CONDUIT ID

COMMUNICATIONS

TELEPHONE OR NETWORK DROP

PAGER RECEPTACLE

HORN/LIGHT DEVICE

PA UNIT

WIRING

CONDUIT HOME RUN

CONDUIT EXPOSED

CONCRETE ENCASED CONDUIT

CONDUIT CONCEALED

FLEXIBLE CONDUIT

CONCRETE ENCASED DUCTBANK

LEFT: CONDUIT RISE (TURN UP)
RIGHT: CONDUIT DROP (TURN DOWN)

REV	ISSUED FOR	DATE	BY

PROJECT ENGINEER: -
DESIGNED BY: F.A.M.
DRAWN BY: G.K.
CHECKED BY:
IF THIS BAR DOES NOT MEASURE 1" THEN DRAWING IS NOT TO FULL SCALE — 0 1/2" 1"

J. BRAD PICKETT, PE NO. 74106

Hazen
HAZEN AND SAWYER
4000 HOLLYWOOD BOULEVARD, SUITE 750N
HOLLYWOOD, FLORIDA 33021
CERTIFICATE OF AUTHORIZATION NO. : 2771

CITY OF HALLANDALE BEACH

WATER TREATMENT PLANT
HIGH SERVICE PUMP REPLACEMENT

Hallandale Beach
PROGRESS. INNOVATION. OPPORTUNITY

LEGEND AND SYMBOLS

DATE: SEPTEMBER 2017
HAZEN NO.: 40621-000
CONTRACT N0.: 1
DRAWING NUMBER: E-01

50% SUBMITTAL

File: H:\40621-000 HALLANDALE HIGH SERVICE PUMPS\DRAWINGS\ELEC\E-01 Saved By: CALLS Save Date: 2017/08/10 12:12 PM
PLOT DATE: 2017/08/11 11:12:24 AM BY: LAURA

ABBREVIATIONS

AE	ANALYSIS ELEMENT
AHU	AIR HANDLING UNIT
AIC	AMPERE INTERRUPTING CAPACITY
AIT	ANALYSIS INDICATING TRANSMITTER
ANSI	AMERICAN NATIONAL STANDARDS INSTITUTE
ASCE	AMERICAN SOCIETY OF CIVIL ENGINEERS
ASME	AMERICAN SOCIETY OF MECHANICAL ENGINEERS
AF	AMPERE FRAME
AT	AMPERE TRIP
ATS	AUTOMATIC TRANSFER SWITCH
BC	BYPASS CONTACTOR
BKR	BREAKER
(L/V)CP	(LOCAL/VENDOR) CONTROL PANEL
CPT	CONTROL POWER TRANSFORMER
CT	CURRENT TRANSFORMER
DB	DUCTBANK
DSW	DISCONNECT SWITCH
EHH	ELECTRIC HAND HOLE
EMH	ELECTRIC MANHOLE
EO	ELECTRICALLY OPERATED
ETM	ELAPSED TIME METER
ETU	ELECTRONIC TRIP UNIT
FAAP	FIRE ALARM ANNUNCIATOR PANEL
FACP	FIRE ALARM CONTROL PANEL
FS	FLOW SWITCH
FSL	FLOW SWITCH LOW
FVNR	FULL VOLTAGE NON-REVERSING
FVR	FULL VOLTAGE REVERSING
GFCI	GROUND FAULT CIRCUIT INTERRUPTER
GFCT	GROUND FAULT CURRENT TRANSFORMER
GNG	GO-NO GO
GND	GROUND
HOA	HAND-OFF-AUTO
HPU	HYDRAULIC POWER UNIT
IC	INPUT CONTACTOR
IEEE	INSTITUTE OF ELECTRICAL AND ELECTRONICS ENGINEERS
ISO	INTERNATIONAL ORGANIZATION FOR STANDARDIZATION
JB	JUNCTION BOX
LCS	LOCAL CONTROL STATION
LP	LIGHTING PANEL
LS	LEVEL SWITCH
LSL	LEVEL SWITCH LOW
LSLL	LEVEL SWITCH LOW-LOW
LSH	LEVEL SWITCH HIGH
LSHH	LEVEL SWITCH HIGH-HIGH
LT	LEVEL TRANSMITTER
MFR	MULTI-FUNCTION RELAY
MH	MANHOLE
MOD	MOTOR OPERATED DAMPER
MOG	MOTOR OPERATED GATE
MOL	MOTOR OPERATED LOUVER
MOV	MOTOR OPERATED VALVE
MPR	MOTOR PROTECTION RELAY
MTD	MOUNTED
MTS	MANUAL TRANSFER SWITCH
MWTS	MOTOR WINDING TEMPERATURE SWITCH
NC	NORMALLY CLOSED
NEC	NATIONAL ELECTRICAL CODE
NEMA	NATIONAL ELECTRICAL MANUFACTURERS ASSN
NFPA	NATIONAL FIRE PROTECTION ASSOCIATION
NO	NORMALLY OPEN
NTS	NOT TO SCALE
OC	OUTPUT CONTACTOR
OL	OVERLOAD

ABBREVIATIONS, CONT.

PB	PULLBOX
PC	PHOTOCELL
PCC	POINT OF COMMON COUPLING
PE	PRESSURE ELEMENT
PIT	PRESSURE INDICATING TRANSMITTER
PLC	PROGRAMMABLE LOGIC CONTROLLER
PP	POWER PANEL
PST	PHASE SHIFTING TRANSFORMER
PT	POTENTIAL TRANSFORMER
PTT	PUSH TO TEST
RCS	REMOTE CONTROL STATION
RECP	RECEPTACLE
RIO	REMOTE I/O
RM	ROOM
RTD	RESISTANCE THERMAL DEVICE
RTU	REMOTE TELEMETRY UNIT
RVAT	REDUCED VOLTAGE AUTO TRANSFORMER
RVSS	REDUCED VOLTAGE SOLID STATE
SA	SUPPLY AIR
S.E.	SERVICE ENTRANCE
SP. C.	SPARE CONDUIT
SPD	SURGE PROTECTIVE DEVICE
SST	STAINLESS STEEL
TB	TEST BLOCK
TC	TIMED CLOSE
TO	TIMED OPEN
TSH	TWISTED SHIELDED
TX	TRANSFORMER
TYP	TYPICAL
UPS	UNINTERRUPTIBLE POWER SUPPLY
VFD	VARIABLE FREQUENCY DRIVE
WPCR	WEATHER PROOF CORROSION RESISTANT
WT	WALK THROUGH
XFMR	TRANSFORMER

NOTES:

1. UNLESS SPECIFICALLY NOTED OTHERWISE, ALL UNDERGROUND CONCRETE ENCASED ELECTRICAL CONDUITS SHALL BE PER STANDARD DETAIL 1611801.
2. THE INSTALLATION OF ALL CONCRETE ENCASED ELECTRICAL CONDUITS SHALL COMPLY WITH ACI 318, SECTION 6.3. CONTRACTOR SHALL SUPPLY EXPANSION JOINT FITTINGS AS REQUIRED FOR THERMAL EXPANSION AND DEFLECTION.
3. BOND ALL NEW CONCRETE ENCASED GROUND CONDUCTORS TO EXISTING GROUND CONDUCTORS IN ALL MANHOLES, PULL BOXES, CABLE TRAYS, AND SIMILAR LOCATIONS WHERE APPLICABLE.
4. UNLESS OTHERWISE SPECIFIED OR NOTED, ALL WALL MOUNTED ELECTRICAL PANELS, ENCLOSURES, AND SIMILAR EQUIPMENT SHALL BE MOUNTED 6'-6" (MAX) FROM THE TOP OF THE PANEL TO FINISHED FLOOR OR GRADE.
5. UNLESS OTHERWISE NOTED, ALL LIGHTING SWITCHES, CONTROL SWITCHES, AND SIMILAR EQUIPMENT SHALL BE MOUNTED WITH THEIR CENTERLINE APPROXIMATELY 4'-0" ABOVE FINISHED FLOOR, SLAB, OR GRADE.
6. A SEPARATE EQUIPMENT GROUNDING CONDUCTOR SHALL BE PROVIDED FOR EACH CIRCUIT (SEPARATE CONDUCTOR IN THE CONDUIT). THE CONDUCTOR SHALL BE TERMINATED AT THE PROPER DEVICE, TERMINAL, OR LUG AT THE POWER SOURCE (MCC GROUND BUS, PANELBOARD GROUND BUS, ETC.). GROUND CONDUCTOR SIZE SHALL BE PER THE LATEST EDITION OF THE NEC.
7. ELECTRICAL SYSTEMS INSTALLED IN HAZARDOUS LOCATIONS SHALL BE CONSTRUCTED IN ACCORDANCE WITH CHAPTER 5, ART. 500 OF THE LATEST EDITION OF THE NEC. CONTRACTOR SHALL SEAL ALL CONDUITS LEAVING HAZARDOUS AREAS. WALL AND FLOOR OPENINGS SHALL BE SEALED WITH FIREPROOF COMPOUND.
8. ALL EQUIPMENT LOCATED IN HAZARDOUS AREAS SHALL BE SUITABLE FOR THE CLASS, DIVISION, AND GROUP RATING OF THE LOCATION.
9. UNLESS SPECIFICALLY NOTED OTHERWISE, EXISTING PAVEMENT SHALL BE SAW CUT AND REMOVED TO ALLOW FOR THE INSTALLATION OF NEW ELECTRICAL DUCTBANKS. AFTER INSTALLATION, REPLACE PAVEMENT WITH NEW TO MATCH ORIGINAL CONDITIONS.
10. LIGHTNING PROTECTION SHALL BE PROVIDED FOR THE STRUCTURES INDICATED ON THE DRAWINGS AND IN ACCORDANCE WITH SECTION 16670.
11. REFERENCE SECTION 01520 FOR CONSTRUCTION SEQUENCING REQUIREMENTS.
12. CONDUIT HOMERUNS ARE NOT SHOWN ON DRAWINGS. CONTRACTOR SHALL REFER TO CONDUIT AND WIRE SCHEDULE, RISER DIAGRAMS, SINGLE LINE DIAGRAMS, AND OTHER DRAWINGS FOR CONDUIT AND WIRE REQUIREMENTS.
13. ALL ELECTRICAL COMPONENTS AND SYSTEMS AND NON-BUILDING STRUCTURES SHALL BE DESIGNED IN ACCORDANCE WITH THE SEISMIC PROVISIONS STIPULATED IN SECTION 9.6 OF ASCE 7-02/05 AND SECTIONS 1621 & 1622 OF IBC 2003/2006 AND SHALL HAVE AN IMPORTANCE FACTOR, I_p, OF 1.5.
14. ALL ELECTRICAL COMPONENTS AND SYSTEMS SHALL REQUIRE A CERTIFICATE OF COMPLIANCE IN ACCORDANCE WITH SECTION 9.6.3.6 OF ASCE 7-02/05.

REV	ISSUED FOR	DATE	BY

PROJECT ENGINEER: -
DESIGNED BY: F.A.M.
DRAWN BY: G.K.
CHECKED BY:
IF THIS BAR DOES NOT MEASURE 1" THEN DRAWING IS NOT TO FULL SCALE 0 1/2" 1"

J. BRAD PICKETT, PE NO. 74106

Hazen
HAZEN AND SAWYER
4000 HOLLYWOOD BOULEVARD, SUITE 750N
HOLLYWOOD, FLORIDA 33021
CERTIFICATE OF AUTHORIZATION NO. : 2771

CITY OF HALLANDALE BEACH

WATER TREATMENT PLANT
HIGH SERVICE PUMP REPLACEMENT

Hallandale Beach
PROSPERITY, INNOVATION, OPPORTUNITY

GENERAL NOTES AND ABBREVIATIONS

DATE: SEPTEMBER 2017
HAZEN NO.: 40621-000
CONTRACT NO.: 1
DRAWING NUMBER: E-02

50% SUBMITTAL

File: H:\40621-000 HALLANDALE HIGH SERVICE PUMPS\DRAWINGS\ELEC\E-02 Saved By CALLS Save Date: 2017/08/10 12:12 PM
PLOT DATE: 2017/08/11 11:12:32 AM BY: LAURA

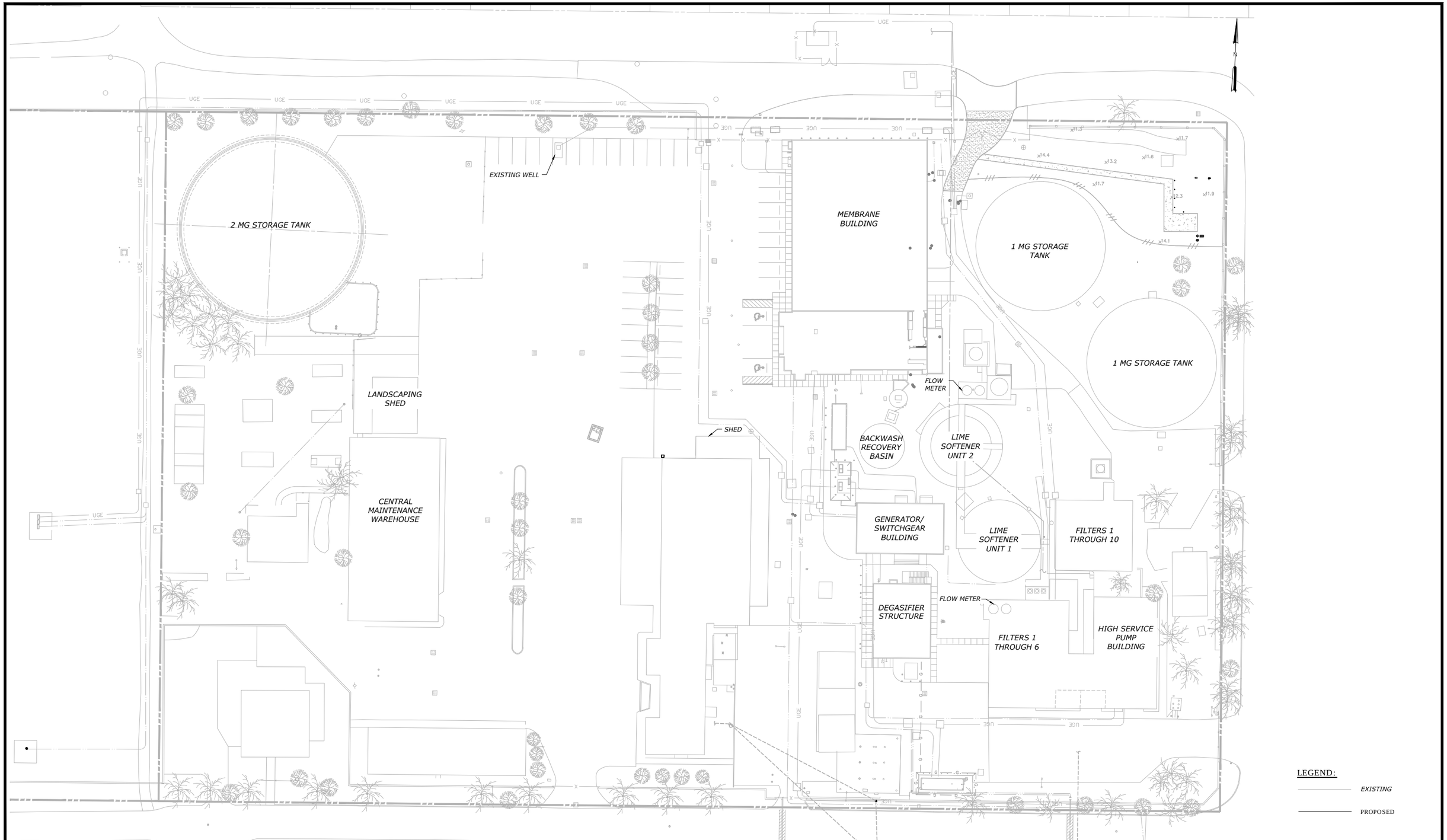

REV	ISSUED FOR	DATE	BY

PROJECT ENGINEER:	-
DESIGNED BY:	G.A.B.
DRAWN BY:	G.B.
CHECKED BY:	
IF THIS BAR DOES NOT MEASURE 1" THEN DRAWING IS NOT TO FULL SCALE	0 1/2" 1"

J. BRAD PICKETT, PE NO. 74106

Hazen

HAZEN AND SAWYER
4000 HOLLYWOOD BOULEVARD, SUITE 750N
HOLLYWOOD, FLORIDA 33021
CERTIFICATE OF AUTHORIZATION NO. : 2771

CITY OF HALLANDALE BEACH

WATER TREATMENT PLANT
HIGH SERVICE PUMP REPLACEMENT

Hallandale Beach
PROSPER, INNOVATION, OPPORTUNITY

OVERALL SITE PLAN

DATE:	SEPTEMBER 2017
HAZEN NO.:	40621-000
CONTRACT NO.:	1
DRAWING NUMBER:	E-03

50% SUBMITTAL

File: H:\40621-000 HALLANDALE HIGH SERVICE PUMPS\DRAWINGS\ELEC\E-03 Saved By CALLS Save Date: 2017/08/10 12:12 PM
PLOT DATE: 2017/08/11 11:12:43 AM BY: LAURA

File: H:\40621-000 HALLANDALE HIGH SERVICE PUMPS\DRAWINGS\ELEC\E-04 Saved By CALLS Save Date: 2017/08/11 9:05 AM
PLOT DATE: 2017/08/11 11:12:52 AM BY: LAURA

REV	ISSUED FOR	DATE	BY

PROJECT ENGINEER:	-
DESIGNED BY:	F.A.M.
DRAWN BY:	G.K.
CHECKED BY:	
IF THIS BAR DOES NOT MEASURE 1" THEN DRAWING IS NOT TO FULL SCALE	0 1/2" 1"

J. BRAD PICKETT, PE NO. 74106

Hazen

HAZEN AND SAWYER
4000 HOLLYWOOD BOULEVARD, SUITE 750N
HOLLYWOOD, FLORIDA 33021
CERTIFICATE OF AUTHORIZATION NO. : 2771

CITY OF HALLANDALE BEACH

WATER TREATMENT PLANT
HIGH SERVICE PUMP REPLACEMENT

Hallandale Beach
PROGRESS. INNOVATION. OPPORTUNITY

EXISTING ONE-LINE DIAGRAM

DATE:	SEPTEMBER 2017
HAZEN NO.:	40621-000
CONTRACT N0.:	1
DRAWING NUMBER:	E-04

50% SUBMITTAL

File: H:\40621-000 HALLANDALE HIGH SERVICE PUMPS\DRAWINGS\ELEC\E-05 Saved By CALLS Save Date: 2017/08/11 9:05 AM
PLOT DATE: 2017/08/11 11:15:01 AM BY: LAURA

REV	ISSUED FOR	DATE	BY

PROJECT ENGINEER:	-
DESIGNED BY:	F.A.M.
DRAWN BY:	G.K.
CHECKED BY:	
IF THIS BAR DOES NOT MEASURE 1" THEN DRAWING IS NOT TO FULL SCALE	0 1/2" 1"

J. BRAD PICKETT, PE NO. 74106

Hazen

HAZEN AND SAWYER
4000 HOLLYWOOD BOULEVARD, SUITE 750N
HOLLYWOOD, FLORIDA 33021
CERTIFICATE OF AUTHORIZATION NO. : 2771

CITY OF HALLANDALE BEACH

WATER TREATMENT PLANT
HIGH SERVICE PUMP REPLACEMENT

Hallandale Beach
PROGRESS. INNOVATION. OPPORTUNITY

PROPOSED ONE-LINE DIAGRAM

DATE:	SEPTEMBER 2017
HAZEN NO.:	40621-000
CONTRACT N0.:	1
DRAWING NUMBER:	E-05

50% SUBMITTAL

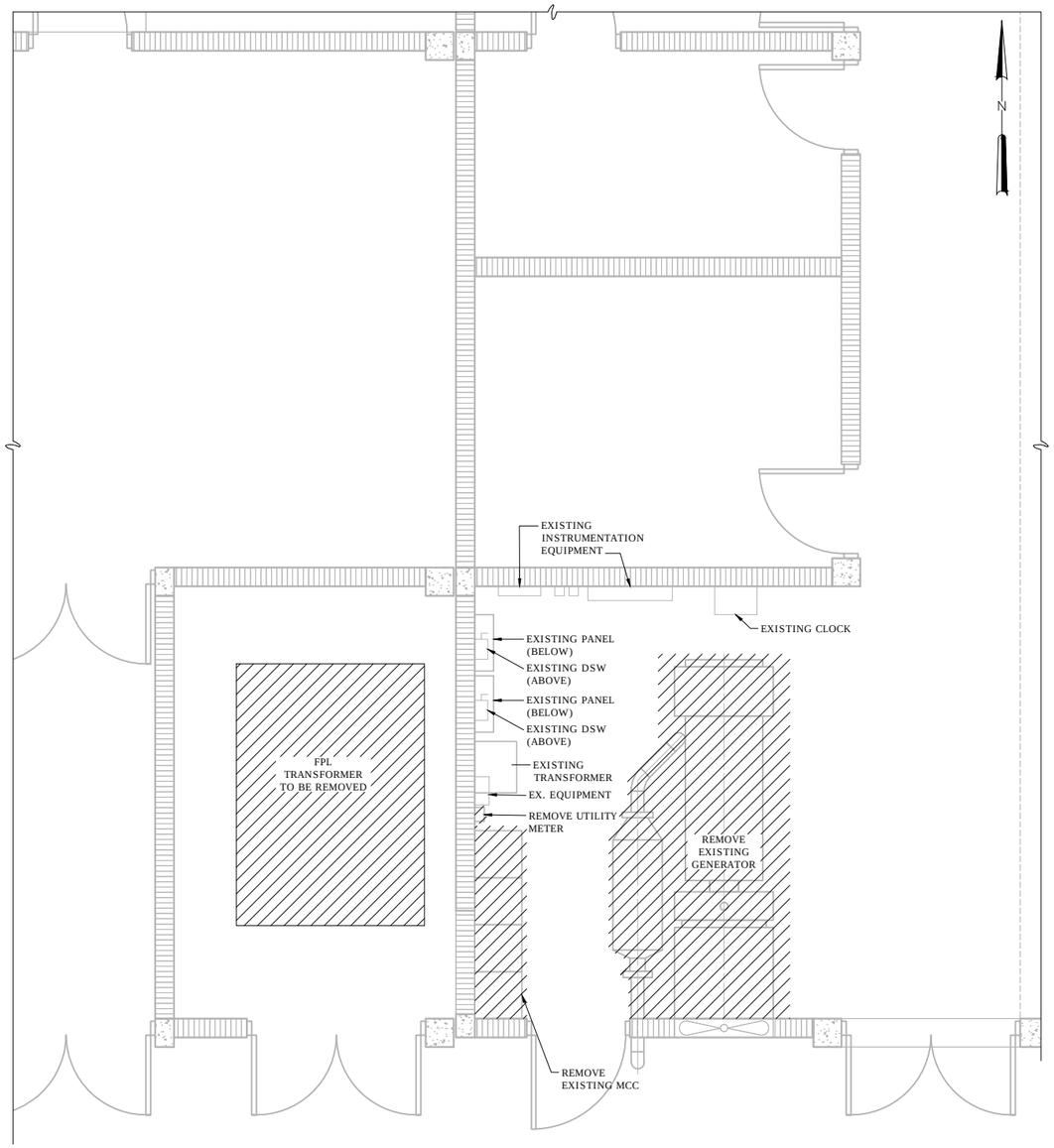

DEMOLITION PLAN

3/8" = 1'-0"

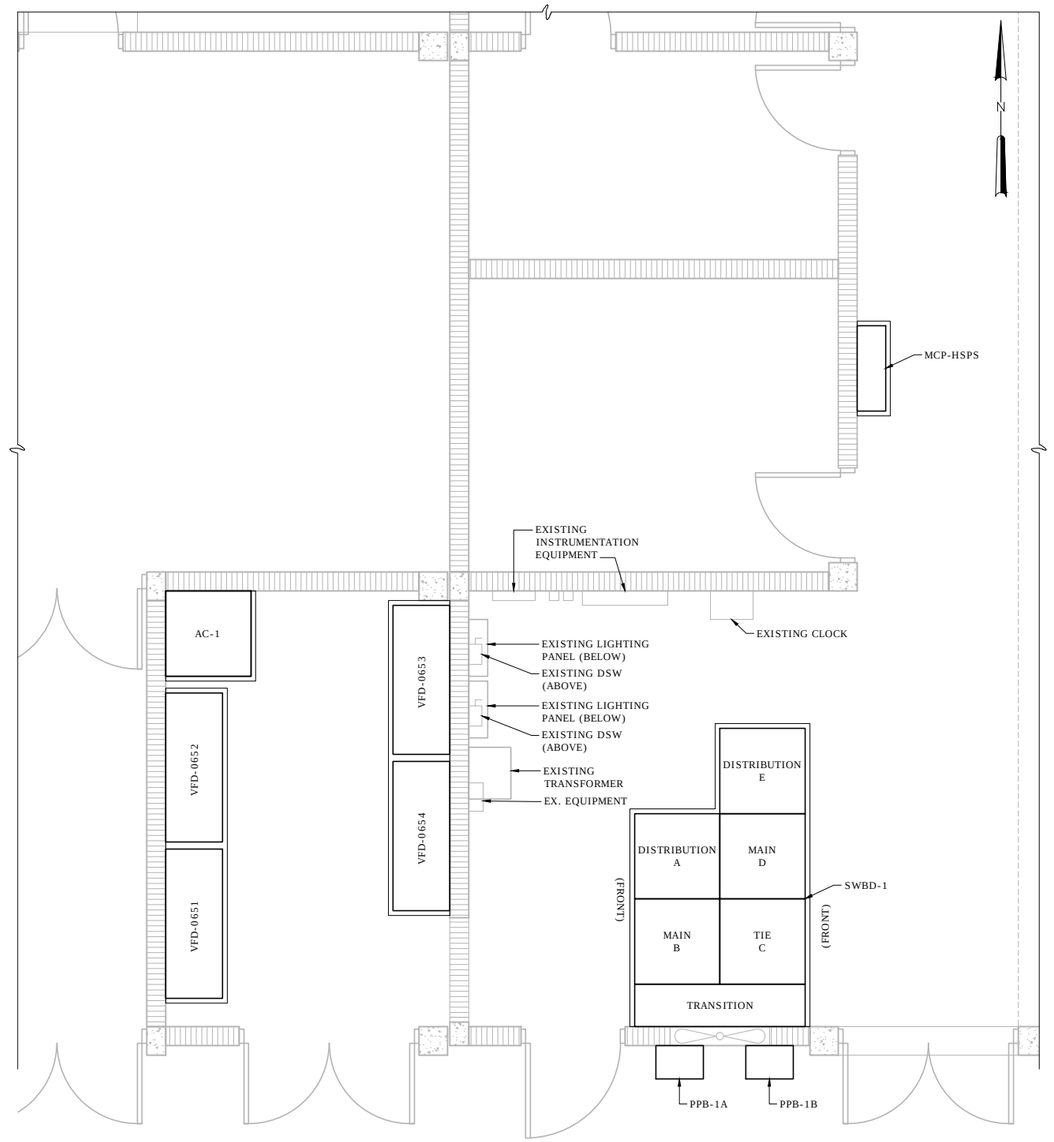

MODIFIED PLAN

3/8" = 1'-0"

LEGEND:

EXISTING

PROPOSED

3/8"=1'-0"

12" 0 1 2 4'

REV	ISSUED FOR	DATE	BY

PROJECT ENGINEER:	-
DESIGNED BY:	F.A.M.
DRAWN BY:	G.K.
CHECKED BY:	

IF THIS BAR DOES NOT MEASURE 1" THEN DRAWING IS NOT TO FULL SCALE 0 1/2" 1"

J. BRAD PICKETT, PE NO. 74106

Hazen

HAZEN AND SAWYER
4000 HOLLYWOOD BOULEVARD, SUITE 750N
HOLLYWOOD, FLORIDA 33021
CERTIFICATE OF AUTHORIZATION NO. : 2771

CITY OF HALLANDALE BEACH

WATER TREATMENT PLANT
HIGH SERVICE PUMP REPLACEMENT

Hallandale Beach
PRIDE-TY, INNOVATION, OPPORTUNITY

ELECTRICAL ROOM PLAN

DATE:	SEPTEMBER 2017
HAZEN NO.:	40621-000
CONTRACT NO.:	1
DRAWING NUMBER:	E-07

50% SUBMITTAL

File: H:\40621-000 HALLANDALE HIGH SERVICE PUMPS\DRAWINGS\ELECT\E-07 Saved By GALS Save Date: 2017/08/10 12:10 PM
PLOT DATE: 2017/08/11 11:13:24 AM BY: LAURA

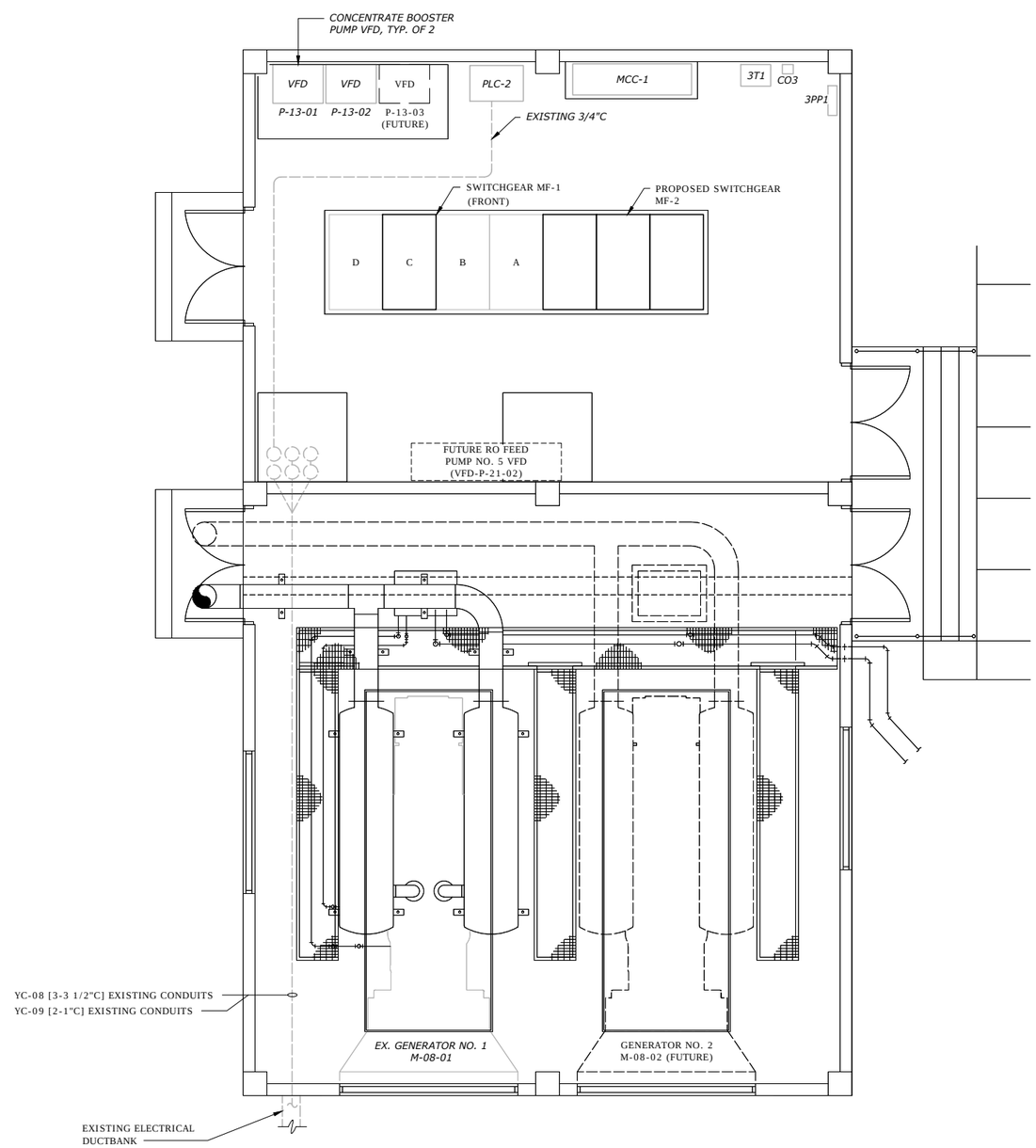

N

LEGEND:

- EXISTING
- PROPOSED
- FUTURE

1/4"=1'-0" 1 0 1 2 3 7'

REV	ISSUED FOR	DATE	BY

PROJECT ENGINEER:	-
DESIGNED BY:	F.A.M.
DRAWN BY:	G.K.
CHECKED BY:	
IF THIS BAR DOES NOT MEASURE 1" THEN DRAWING IS NOT TO FULL SCALE	0 1/2" 1"

J. BRAD PICKETT, PE NO. 74106

Hazen

HAZEN AND SAWYER
4000 HOLLYWOOD BOULEVARD, SUITE 750N
HOLLYWOOD, FLORIDA 33021
CERTIFICATE OF AUTHORIZATION NO. : 2771

CITY OF HALLANDALE BEACH

WATER TREATMENT PLANT
HIGH SERVICE PUMP REPLACEMENT

Hallandale Beach
PROSPERITY, INNOVATION, OPPORTUNITY

GENERATOR BUILDING

DATE:	SEPTEMBER 2017
HAZEN NO.:	40621-000
CONTRACT NO.:	1
DRAWING NUMBER:	E-08

50% SUBMITTAL

File: H:\40621-000 HALLANDALE HIGH SERVICE PUMPS\DRAWINGS\ELEC\E-08 Saved By CALLS Save Date: 2017/08/10 12:11 PM
PLOT DATE: 2017/08/11 11:13:36 AM BY: LAURA

PHOTO 1 - LS PLANT MCC-1

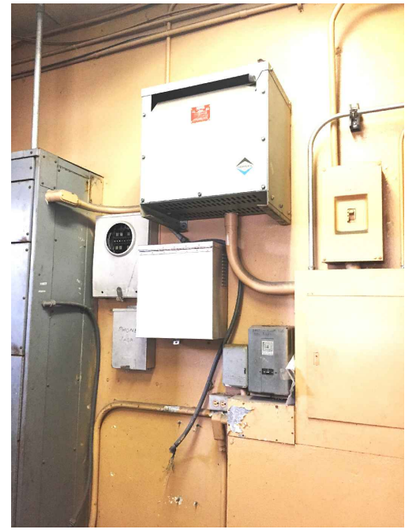

PHOTO 2 - XFMR AT LS PLANT MCC-1

PHOTO 3 - GENERATOR

PHOTO 4 - FPL TRANSFORMER ROOM

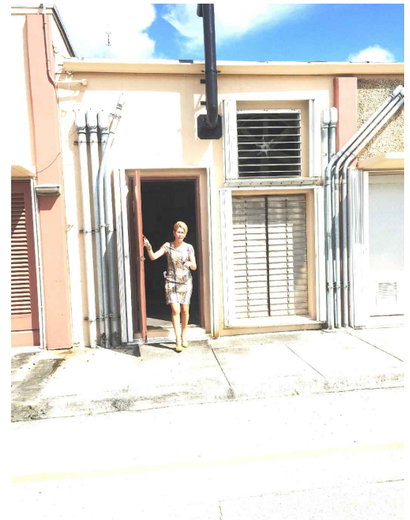

PHOTO 5 - ELECTRICAL CONDUIT

REV	ISSUED FOR	DATE	BY

PROJECT ENGINEER: -
DESIGNED BY: F.A.M.
DRAWN BY: G.K.
CHECKED BY:
IF THIS BAR DOES NOT MEASURE 1" THEN DRAWING IS NOT TO FULL SCALE 0 1/2" 1"

J. BRAD PICKETT, PE NO. 74106

Hazen
HAZEN AND SAWYER
4000 HOLLYWOOD BOULEVARD, SUITE 750N
HOLLYWOOD, FLORIDA 33021
CERTIFICATE OF AUTHORIZATION NO. : 2771

CITY OF HALLANDALE BEACH

WATER TREATMENT PLANT
HIGH SERVICE PUMP REPLACEMENT

Hallandale Beach
PROSPERITY, INNOVATION, OPPORTUNITY

ELECTRICAL DEMOLITION
PHOTOS

DATE: SEPTEMBER 2017
HAZEN NO.: 40621-000
CONTRACT NO.: 1
DRAWING NUMBER: E-09

50% SUBMITTAL

File: H:\40621-000 HALLANDALE HIGH SERVICE PUMPS\DRAWINGS\ELEC\E-09 Saved By CALL3 Save Date: 2017/08/11 9:13 AM
PLOT DATE: 2017/08/11 11:13:47 AM By: LAURA

PHOTO 5 - LS PLANT MCC-2

REV	ISSUED FOR	DATE	BY

PROJECT ENGINEER: -
DESIGNED BY: F.A.M.
DRAWN BY: G.K.
CHECKED BY:
IF THIS BAR DOES NOT MEASURE 1" THEN DRAWING IS NOT TO FULL SCALE 0 1/2" 1"

J. BRAD PICKETT, PE NO. 74106

Hazen
HAZEN AND SAWYER
4000 HOLLYWOOD BOULEVARD, SUITE 750N
HOLLYWOOD, FLORIDA 33021
CERTIFICATE OF AUTHORIZATION NO. : 2771

CITY OF HALLANDALE BEACH

WATER TREATMENT PLANT
HIGH SERVICE PUMP REPLACEMENT

Hallandale Beach
PROGRESS. INNOVATION. OPPORTUNITY

LIME PLANT MCC-2
MODIFICATION

DATE: SEPTEMBER 2017
HAZEN NO.: 40621-000
CONTRACT N0.: 1
DRAWING NUMBER: E-10

50% SUBMITTAL

File: H:\40621-000 HALLANDALE HIGH SERVICE PUMPS\DRAWINGS\ELEC\E-10 Saved By CALL3 Save Date: 2017/08/11 9:10 AM
PLOT DATE: 2017/08/11 11:12:17 AM BY: LAURA

INSTRUMENT AND FUNCTION SYMBOLS

LOCATION AND ACCESSIBILITY	SHARED DISPLAY/SHARED CONTROL: PRIMARY CHOICE OR BASIC PROCESS CONTROL SYSTEM	SHARED DISPLAY/SHARED CONTROL: ALTERNATE CHOICE OR SAFETY INSTRUMENTED SYSTEM	COMPUTER SYSTEMS AND SOFTWARE	DISCRETE
- LOCATED IN FIELD - NOT PANEL, CABINET, OR CONSOLE MOUNTED - VISIBLE AT FIELD LOCATION - NORMALLY OPERATOR ACCESSIBLE	ABCD 12345	ABCD 12345	ABCD 12345	ABCD 12345
- LOCATED IN OR ON FRONT OF CENTRAL OR MAIN PANEL OR CONSOLE - VISIBLE ON FRONT OF PANEL OR ON VIDEO DISPLAY - NORMALLY OPERATOR ACCESSIBLE AT PANEL FRONT OR CONSOLE	ABCD 12345	ABCD 12345	ABCD 12345	ABCD 12345
- LOCATED IN REAR OF CENTRAL OR MAIN PANEL - LOCATED IN CABINET BEHIND PANEL - NOT VISIBLE ON FRONT OF PANEL OR ON VIDEO DISPLAY - NOT NORMALLY OPERATOR ACCESSIBLE AT PANEL OR CONSOLE	ABCD 12345	ABCD 12345	ABCD 12345	ABCD 12345
- LOCATED IN OR ON FRONT OF SECONDARY OR LOCAL PANEL OR CONSOLE - VISIBLE ON FRONT OF PANEL OR ON VIDEO DISPLAY - NORMALLY OPERATOR ACCESSIBLE AT PANEL FRONT OR CONSOLE	ABCD 12345	ABCD 12345	ABCD 12345	ABCD 12345
- LOCATED IN REAR OF SECONDARY OR LOCAL PANEL - LOCATED IN FIELD CABINET - NOT NORMALLY OPERATOR ACCESSIBLE AT PANEL OR CONSOLE	ABCD 12345	ABCD 12345	ABCD 12345	ABCD 12345

X — SUFFIX (X) TO DIFFERENTIATE BETWEEN INSTRUMENTS AND FUNCTIONS THAT WOULD OTHERWISE HAVE THE SAME IDENTIFICATION.

SINGLE INSTRUMENT OR OTHER COMPONENT HAVING MULTIPLE FUNCTIONS OR SHARING A COMMON HOUSING

(ZZZ) — DESIGNATIONS OF CONTROL FUNCTIONS (ZZZ) ASSOCIATED WITH INSTRUMENT OR OTHER COMPONENTS.

AHC -	AUTO/HOLD/CLOSE	OC -	OPEN/CLOSE
AM -	AUTO/MANUAL	OSC -	OPEN/STOP/CLOSED
CALC -	CALCULATION	POT -	POTENTIOMETER
DEV -	DEVIATION	RL -	RAISE/LOWER
MOA -	MANUAL/OFF/AUTO	RS -	RUN/STOP
HOR -	HAND/OFF/REMOTE	RSL -	RAISE/STOP/LOWER
LOS -	LOCKOUT STOP	SD -	SHUTDOWN
LR -	LOCAL/REMOTE	SEL -	SELECT
LSR -	LOCAL/STOP/REMOTE	SP -	SET POINT
00 -	ON / OFF	SR -	START/RESET
		SS -	STOP/START

ABCD 12345 — INSTRUMENT WITH COMPUTING OR CONVERTING FUNCTION

ABCD 12345 — CONTROL SYSTEM COMPUTING FUNCTION

CONVERT

E - VOLTAGE	H - HYDRAULIC
I - CURRENT	O - ELECTROMAGNETIC, SONIC
P - PNEUMATIC	R - RESISTANCE (ELECT.)
A - ANALOG	D - DIGITAL
B - BINARY	

COMPUTE

SUMMING	PROPORTIONAL	DIFFERENCE
SUBTRACTOR	DERIVATIVE	HIGH SELECTING
MULTIPLYING	AVERAGING	LOW SELECTING
DIVIDING	RATIO	INTEGRAL
ROOT EXTRACTION	PID	COMPLEX FUNCTION

= 1, 2, 3, etc.
REFER TO NOTE ON SAME SHEET FOR BRIEF DESCRIPTION

* — ELECTRICAL CONTROL INTERLOCK

\# — COMPLEX INTERLOCK
= 1, 2, 3, etc.
REFER TO NOTE ON SAME SHEET FOR BRIEF DESCRIPTION

AND — AND LOGIC

OR — OR LOGIC

ABCD 1234 — PILOT LIGHT

VALVE, GATE, AND ACTUATOR SYMBOLS

GATE VALVE
PLUG VALVE
GLOBE VALVE
BALL VALVE
BUTTERFLY VALVE
BALL CHECK VALVE
SWING CHECK VALVE
CHECK VALVE
3-WAY VALVE
3-WAY BALL VALVE
DIAPHRAGM VALVE
PINCH VALVE
NEEDLE VALVE
SLUICE GATE
STOP/SLIDE GATE
SOLENOID ACTUATOR
PNEUMATIC ACTUATOR

BACKFLOW PREVENTER
PRESSURE RELIEF VALVE
VACUUM RELIEF VALVE
COMBINATION VACUUM AND PRESSURE RELIEF VALVE
PRESSURE-REDUCING REGULATOR
BACKPRESSURE REGULATOR
AIR RELEASE VALVE
ROTARY MOTOR
ELECTROHYDRAULIC ACTUATOR
MANUAL ACTUATOR

PUMP AND EQUIPMENT SYMBOLS

CENTRIFUGAL WET PIT PUMP (OR DRY-PIT SUBMERSIBLE)
BLOWER (CENTRIFUGAL)
GEAR PUMP OR BLOWER (POSITIVE DISPLACEMENT)
CHOPPER PUMP
PISTON PUMP
DIAPHRAGM PUMP
ROTARY LOBE PUMP OR BLOWER (POSITIVE DISPLACEMENT)
METERING PUMP
COMPRESSOR
PROGRESSIVE CAVITY PUMP
VERTICAL PUMP
INLINE GRINDER
CENTRIFUGAL PUMP
SCREW CENTRIFUGAL PUMP
MIXER

IDENTIFICATION LETTERS

	FIRST LETTERS: MEASURED OR INITIATING VARIABLE	FIRST LETTERS: VARIABLE MODIFIER	SUCCEEDING LETTERS: READOUT/ PASSIVE FUNCTION	SUCCEEDING LETTERS: OUTPUT/ ACTIVE FUNCTION	SUCCEEDING LETTERS: FUNCTION MODIFIER
A	ANALYSIS		ALARM		
B	BURNER, COMBUSTION		USER'S CHOICE	USER'S CHOICE	USER'S CHOICE
C	CONDUCTIVITY			CONTROL	CLOSE
D	DENSITY (MASS) OR SPECIFIC	DIFFERENCE, DIFFERENTIAL			DEVIATION
E	GRAVITY VOLTAGE (EMF)		SENSOR, PRIMARY ELEMENT		
F	FLOW, FLOW RATE	RATIO			
G	USER'S CHOICE		GLASS, GAUGE, VIEWING DEVICE		
H	HAND				HIGH
I	CURRENT		INDICATE		
J	POWER		SCAN		
K	TIME, SCHEDULE	TIME RATE OF CHANGE		CONTROL STATION	
L	LEVEL		LIGHT		LOW
M	MOISTURE OR HUMIDITY	MOMENTARY			MIDDLE, INTERMEDIATE
N	TORQUE		USER'S CHOICE	USER'S CHOICE	USER'S CHOICE
O	USER'S CHOICE		ORIFICE, RESTRICTION		OPEN
P	PRESSURE		POINT (TEST CONNECTION)		
Q	QUANTITY	INTEGRATE, TOTALIZE	INTEGRATE, TOTALIZE		
R	RADIATION		RECORD		RUN
S	SPEED, FREQUENCY	SAFETY		SWITCH	STOP
T	TEMPERATURE			TRANSMIT	
U	MULTIVARIABLE		MULTIFUNCTION	MULTIFUNCTION	
V	VIBRATION, MECHANICAL ANALYSIS			VALVE, DAMPER, LOUVER	
W	WEIGHT, FORCE		WELL PROBE		
X	UNCLASSIFIED	X-AXIS	ACCESSORY DEVICES, UNCLASSIFIED	UNCLASSIFIED	UNCLASSIFIED
Y	EVENT, STATE, PRESENCE	Y-AXIS		AUXILIARY DEVICES	
Z	POSITION, DIMENSION	Z-AXIS, SAFETY INSTRUMENTED SYSTEM		DRIVER, ACTUATOR, UNCLASSIFIED FINAL CONTROL ELEMENT	

MISCELLANEOUS SYMBOLS

EXPANSION JOINT
QUICK CONNECT
BLIND FLANGE
FLEXIBLE HOSE
CALIBRATION CYLINDER
PULSATION DAMPENER
EXPANSION TANK
HORN
HORN/STROBE
RUPTURE DISK
VENT
DIAPHRAGM SEAL
FULL LINE OR TAPPED RING SEAL
DRAIN
XXXX-YYYYY — EQUIPMENT OR PANEL TAG
MOTOR
FILTER
AIR FILTER
STATIC MIXER
INJECTOR

PRIMARY ELEMENT SYMBOLS

MAGNETIC FLOW METER
SONIC FLOW METER
THERMAL MASS FLOW METER
TURBINE OR PROPELLER FLOW METER
VENTURI FLOW METER
AVERAGING PITOT TUBE
VORTEX FLOW METER
POSITIVE DISPLACEMENT FLOW METER
PARSHALL FLUME
WEIR
ORIFICE PLATE
FICV — ROTAMETER WITH INTEGRAL VALVE
XX — XX: RF=ADMITTANCE/CAPACITANCE MAN=MANOMETER
ULTRASONIC LEVEL SENSOR
SUBMERSIBLE LEVEL SENSOR
NON-CONTACT RADAR LEVEL SENSOR
GUIDED WAVE RADAR LEVEL SENSOR
FLOAT LEVEL SWITCH
CAPACITANCE LEVEL SENSOR

ANALYTICAL ABBREVIATIONS

AXX 12345 (ZZZ) — ANALYSIS INSTRUMENT

(ZZZ) = ALK - ALKALINITY
CH4 - METHANE
CL2 - CHLORINE
COMB - COMBUSTIBLE GAS
CON - CONDUCTIVITY
DO - DISSOLVED OXYGEN
IR - INFRARED
H2S - HYDROGEN SULFIDE
LEL - LOWER EXPLOSIVE LIMIT
METH - METHANOL VAPOR
NH3 - AMMONIA
NO3 - NITRATE
O2 - OXYGEN
O3 - OZONE
ORP - OXIDATION/REDUCTION POTENTIAL
PETRO - PETROLEUM VAPOR
PH - HYDROGEN ION CONCENTRATION
PO4 - PHOSPHATE
SO2 - SULFUR DIOXIDE
TH - TOTAL HARDNESS
TSS - TOTAL SUSPENDED SOLIDS
TURB - TURBIDITY
UV - ULTRAVIOLET

GENERAL NOTES

1. SYMBOLS AND NOMENCLATURE ARE BASED ON ANSI/ISA-5.1-2009.
2. REFER TO LEGEND SHEETS OF OTHER DISCIPLINES FOR ADDITIONAL SYMBOLS AND ABBREVIATIONS.
3. REFER TO SPECIFICATIONS FOR ADDITIONAL DETAIL ON CONTROL SYSTEM FUNCTIONAL REQUIREMENTS.
4. INSTRUMENTS AND PANELS DENOTED WITH AN ASTERISK (*) ARE PROVIDED BY OTHER DISCIPLINES. REFER TO THE DRAWINGS AND SPECIFICATIONS OF OTHER DISCIPLINES FOR ADDITIONAL DETAIL.
5. POWER SUPPLIES FOR LOOPS OR SYSTEMS SHALL BE FURNISHED BY THE INSTRUMENTATION SUPPLIER TO MEET THE PARTICULAR CHARACTERISTICS (E.G., VOLTAGE AND CURRENT REQUIREMENTS) OF COMPONENTS IN EACH LOOP OR SYSTEM.

LINE SYMBOLS AND LEGEND

MAJOR PROCESS PIPES OR CHANNELS
SECONDARY PROCESS OR MECHANICAL CONNECTION
AIR SUPPLY OR SIGNAL
ELECTRICAL SIGNAL/ COPPER CABLE
DATA LINK OR INTERNAL SOFTWARE LINK
FO — FIBER OPTIC CABLE
C6 — CAT6 CABLE
PROCESS/SIGNALS NOT CONNECTED (CROSSING)
PROCESS/SIGNALS CONNECTED
TAG / DRAWING — OFF-SHEET CONNECTOR
DISCRETE ELECTRICAL SIGNALS
DISCRETE DIGITAL SIGNALS
ANALOG ELECTRICAL SIGNALS
ANALOG DIGITAL SIGNALS

REV	ISSUED FOR	DATE	BY

PROJECT ENGINEER: -
DESIGNED BY: K.R.D.
DRAWN BY: K.R.D.
CHECKED BY:
IF THIS BAR DOES NOT MEASURE 1" THEN DRAWING IS NOT TO FULL SCALE — 0 1/2" 1"

KEITH R. DINNEN
NO. 78757

Hazen
HAZEN AND SAWYER
4000 HOLLYWOOD BOULEVARD, SUITE 750N
HOLLYWOOD, FLORIDA 33021
CERTIFICATE OF AUTHORIZATION NO. : 2771

CITY OF HALLANDALE BEACH
WATER TREATMENT PLANT
HIGH SERVICE PUMP REPLACEMENT

Hallandale Beach — PROGRESS. INNOVATION. OPPORTUNITY

INSTRUMENTATION SYMBOLS AND LEGEND

DATE: SEPTEMBER 2017
HAZEN NO.: 40621-000
CONTRACT N0.: 1
DRAWING NUMBER: I-01

50% SUBMITTAL

File: H:\40621-000 HALLANDALE HIGH SERVICE PUMPS\DRAWINGS\MEST\I-01 Saved By LAURA Save Date: 2017/08/11 11:28 AM
PLOT DATE: 2017/08/11 11:33:45 AM BY: LAURA

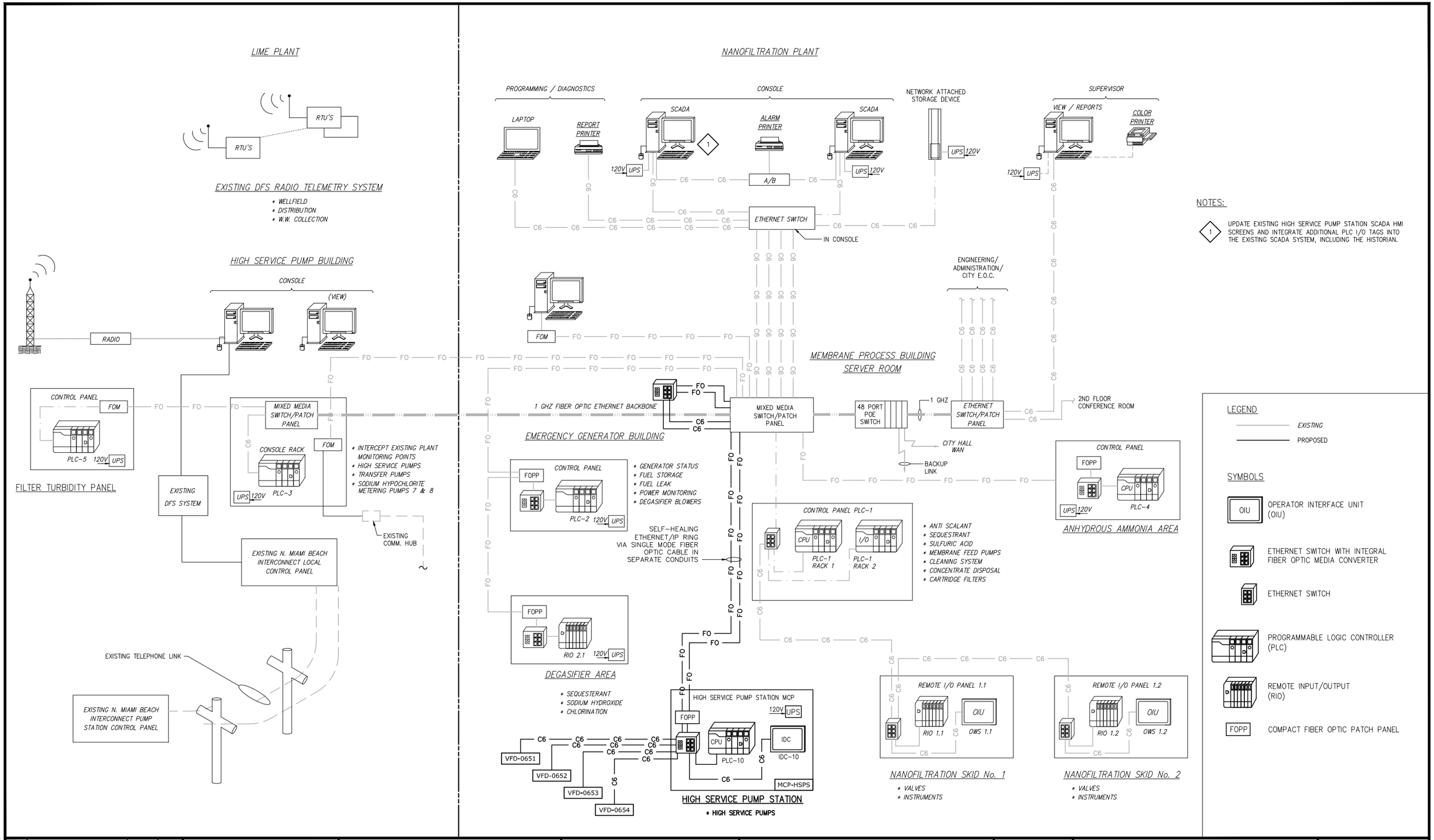

REV	ISSUED FOR	DATE	BY

PROJECT ENGINEER: -
DESIGNED BY: K.R.D.
DRAWN BY: K.R.D.
CHECKED BY:
IF THIS BAR DOES NOT MEASURE 1" THEN DRAWING IS NOT TO FULL SCALE 0 1/2" 1"

KEITH R. DINNEN
NO. 78757

Hazen
HAZEN AND SAWYER
4000 HOLLYWOOD BOULEVARD, SUITE 750N
HOLLYWOOD, FLORIDA 33021
CERTIFICATE OF AUTHORIZATION NO. : 2771

CITY OF HALLANDALE BEACH

WATER TREATMENT PLANT
HIGH SERVICE PUMP REPLACEMENT

Hallandale Beach
PROGRESS. INNOVATION. OPPORTUNITY

SCADA NETWORK DIAGRAM

DATE: SEPTEMBER 2017
HAZEN NO.: 40621-000
CONTRACT NO.: 1
DRAWING NUMBER: I-02

50% SUBMITTAL

File: H:\40621-000 HALLANDALE HIGH SERVICE PUMPS\DRAWINGS\INSTU-02 Saved By LAURA Save Date: 2017/09/11 11:28 AM
PLOT DATE: 2017/09/11 11:35:47 AM BY: LAURA

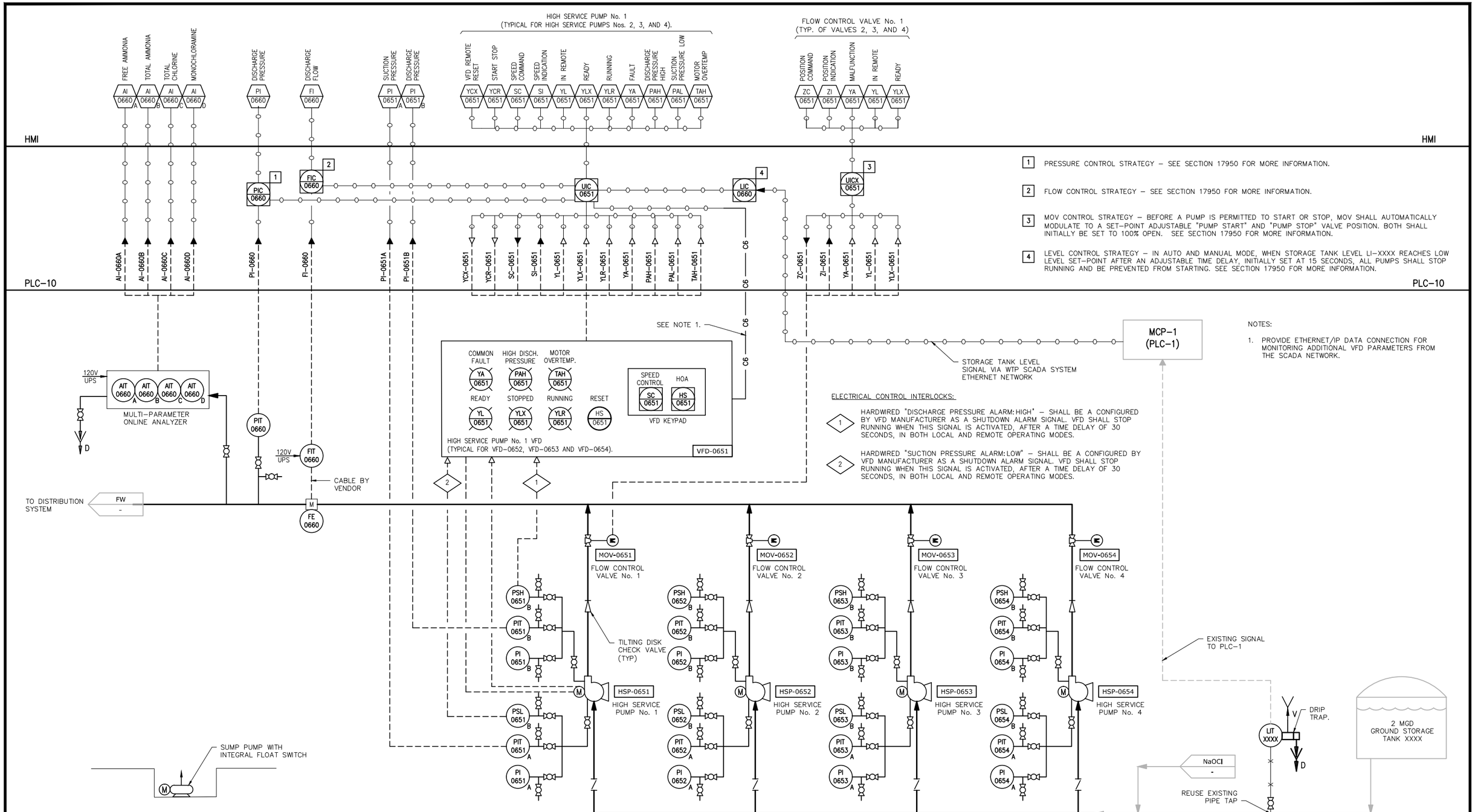

REV	ISSUED FOR	DATE	BY

PROJECT ENGINEER: -
DESIGNED BY: K.R.D.
DRAWN BY: K.R.D.
CHECKED BY:
IF THIS BAR DOES NOT MEASURE 1" THEN DRAWING IS NOT TO FULL SCALE 0 1/2" 1"

KEITH R. DINNEN
NO. 78757

Hazen
HAZEN AND SAWYER
4000 HOLLYWOOD BOULEVARD, SUITE 750N
HOLLYWOOD, FLORIDA 33021
CERTIFICATE OF AUTHORIZATION NO. : 2771

CITY OF HALLANDALE BEACH

WATER TREATMENT PLANT
HIGH SERVICE PUMP REPLACEMENT

Hallandale Beach
PROGRESS. INNOVATION. OPPORTUNITY

HIGH SERVICE PUMP STATION
P&ID

DATE: SEPTEMBER 2017
HAZEN NO.: 40621-000
CONTRACT NO.: 1
DRAWING NUMBER: I-03

50% SUBMITTAL

File: H:\40621-000 HALLANDALE HIGH SERVICE PUMPS\DRAWINGS\INSTU-03 Saved By LAURA Save Date: 2017/09/11 11:28 AM
PLOT DATE: 2017/09/11 11:35:48 AM BY: LAURA

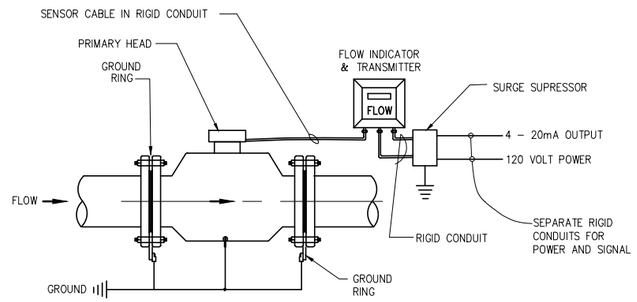

NOTE:
STRAIGHT INLET RUN MINIMUM OF 5x DIAMETER AND OUTLET RUN MINIMUM OF 2x DIAMETER
FOLLOW MANUFACTURER'S INSTALLAION INSTRUCTIONS

MAGNETIC FLOW METER

DETAIL STD
N.T.S. –

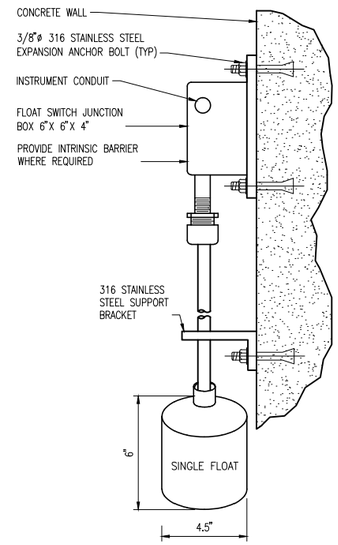

SLIDING FLOAT SWITCH

DETAIL STD
N.T.S. –

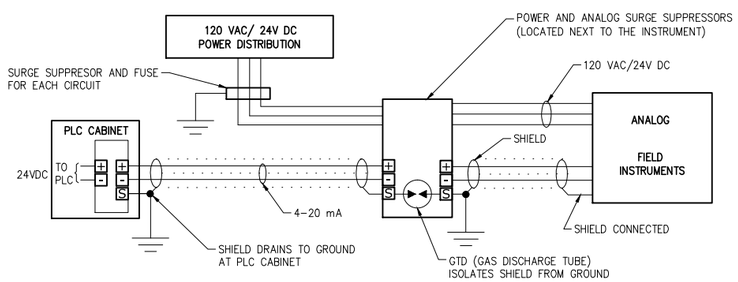

4–WIRE FIELD TRANSMITTERS (AC AND DC)

DETAIL STD
N.T.S. –

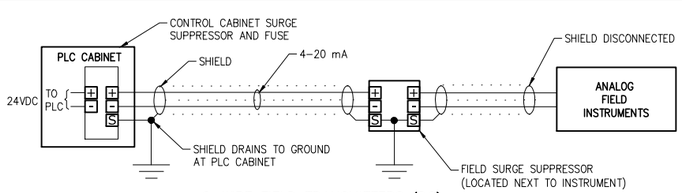

2–WIRE FIELD TRANSMITTERS (DC)

DETAIL STD
N.T.S. –

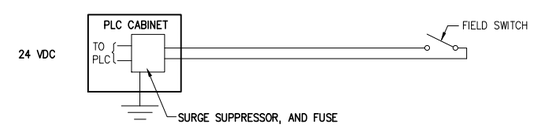

DISCRETE PLC/INPUT CIRCUIT

DETAIL STD
N.T.S. –

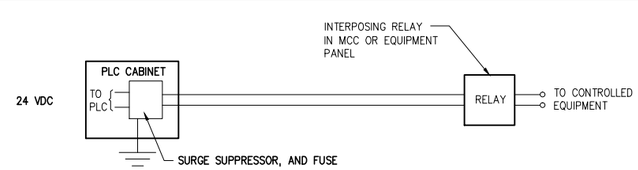

DISCRETE PLC/OUTPUT CIRCUIT

DETAIL STD
N.T.S. –

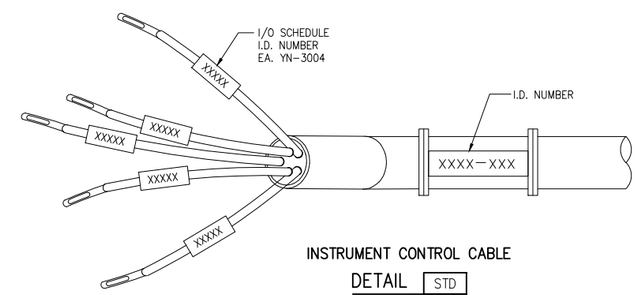

INSTRUMENT CONTROL CABINET

DETAIL STD
N.T.S. –

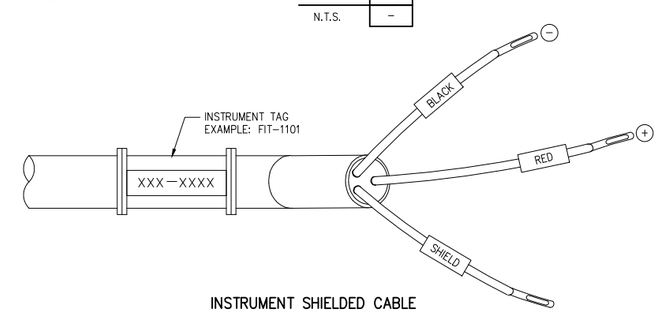

INSTRUMENT SHIELDED CABLE

DETAIL STD
N.T.S. –

REV	ISSUED FOR	DATE	BY

PROJECT ENGINEER:	-
DESIGNED BY:	K.R.D.
DRAWN BY:	K.R.D.
CHECKED BY:	
IF THIS BAR DOES NOT MEASURE 1" THEN DRAWING IS NOT TO FULL SCALE	0 1/2" 1"

KEITH R. DINNEN
NO. 78757

Hazen

HAZEN AND SAWYER
4000 HOLLYWOOD BOULEVARD, SUITE 750N
HOLLYWOOD, FLORIDA 33021
CERTIFICATE OF AUTHORIZATION NO. : 2771

CITY OF HALLANDALE BEACH

WATER TREATMENT PLANT
HIGH SERVICE PUMP REPLACEMENT

Hallandale Beach
PROGRESS. INNOVATION. OPPORTUNITY

INSTRUMENTATION DETAILS

DATE:	SEPTEMBER 2017
HAZEN NO.:	40621-000
CONTRACT N0.:	1
DRAWING NUMBER:	I-04

50% SUBMITTAL

File: H:\40621-000 HALLANDALE HIGH SERVICE PUMPS\DRAWINGS\INSTU-04 Saved By LAURA Save Date: 2017/09/11 11:26 AM
PLOT DATE: 2017/09/11 11:35:50 AM BY: LAURA

HVAC GENERAL NOTES

1. DESIGN IS IN ACCORDANCE WITH AND CONSTRUCTION SHALL COMPLY WITH THE PROVISIONS OF THE FLORIDA BUILDING CODE 5TH EDITION (2014).
2. EQUIPMENT SIZES AND LOCATIONS ARE APPROXIMATE. ACTUAL DIMENSIONS TO BE DETERMINED BY EQUIPMENT FURNISHED. COORDINATE HVAC WORK WITH THE WORK OF ALL OTHER TRADES.
3. FINAL OPENING DIMENSIONS, CONCRETE PAD SIZES, AND LOCATIONS MUST BE COORDINATED DURING CONSTRUCTION WITH ACCEPTED SHOP DRAWINGS.
4. FINAL SIZES OF FLOOR/ROOF/WALL OPENINGS, DUCT PLENUMS, TRANSITIONS AND PIPING CONNECTIONS TO ALL EQUIPMENT SHALL BE DETERMINED BY EQUIPMENT FURNISHED.
5. THE DRAWINGS ARE SCHEMATIC IN NATURE AND SHOW INTENDED GENERAL LOCATION OF HVAC EQUIPMENT AND SYSTEMS. NOT ALL OFFSETS AND REQUIRED FITTINGS FOR ACTUAL FIELD INSTALLATION ARE INTENDED TO BE SHOWN FOR INSTALLATION OF SYSTEMS IN THE SPACE AVAILABLE IN CONSIDERATION OF WORK OF OTHER TRADES AND FIELD CONDITIONS. CONTRACTOR SHALL PROVIDE ADDITIONAL OFFSETS IN DUCTWORK AND PIPING AS REQUIRED TO AVOID SUCH INTERFERENCES OR FIELD CONDITIONS AT NO ADDITIONAL COST TO THE ORIGINAL CONTRACT AMOUNT.
6. COORDINATE THE REQUIREMENTS FOR HVAC OPENINGS AND SLEEVES IN BUILDING ELEMENTS WITH THE GENERAL CONTRACTOR.
7. CONTRACTOR SHALL REFER TO SPECIFICATION SECTION 09900 FOR PAINTING REQUIREMENTS UNLESS OTHERWISE NOTED.
8. REFER TO ELECTRICAL DRAWINGS OR SPECIFICATIONS FOR INTERLOCKING WIRING REQUIREMENTS.
9. PROVIDE ADEQUATE SUPPORT, PER THE MANUFACTURER'S RECOMMENDATIONS, FOR ALL HVAC EQUIPMENT.
10. CONTRACTOR SHALL BE RESPONSIBLE FOR CHECKING ELECTRICAL RATINGS FROM CERTIFIED DRAWINGS OF EQUIPMENT AND SHALL MAKE ANY BRANCH CIRCUIT DISTRIBUTION MODIFICATION REQUIREMENTS WITHOUT ANY ADDITIONAL COST TO OWNER. THE CONTRACTOR SHALL SUBMIT A SCHEDULE OF SUCH CHANGES FOR APPROVAL BY ENGINEER.
11. WHEREVER THE REQUIREMENTS AND REGULATIONS OF STATE, FEDERAL AND LOCAL AUTHORITIES HAVING JURISDICTION DIFFER FROM THE DRAWINGS OR SPECIFICATIONS, THEY SHALL TAKE PRECEDENCE AND SHALL BE MADE PART OF THE CONTRACT (EXCEPT WHERE THE DRAWINGS OR SPECIFICATIONS ARE MORE STRINGENT).
12. THERMOSTATS, SENSORS, AND/OR CONTROL PANEL LOCATIONS SHOWN ARE APPROXIMATE AND SHALL BE COORDINATED TO SUIT FIELD CONDITIONS.
13. INSTALL WALL MTD SENSORS, CONTROLS AND THERMOSTATS 4'-0" ABOVE FINISHED FLOOR UNLESS OTHERWISE NOTED. ALIGN WITH OTHER NEARBY ITEMS SUCH AS LIGHT SWITCHES. DO NOT INSTALL CLOSER THAN 6-INCHES FROM EDGE OF DOOR FRAME OR CORNER OF WALL. WHERE CONFLICTS MAY OCCUR WITH ITEMS SUCH AS LIGHT SWITCHES, MOUNT THE SENSOR OR CONTROL DEVICE 4'-6" ABOVE FINISHED FLOOR CENTERED ABOVE THE LIGHT SWITCH.
14. COORDINATE THE LOCATIONS OF HVAC ITEMS EXPOSED IN FINISHED SPACES WITH ARCHITECTURAL FEATURES INDICATED ON THE DRAWINGS.
15. PROVIDE ADEQUATE MEANS OF ACCESS CLEARANCE FOR ALL HVAC/MECHANICAL EQUIPMENT AND SYSTEMS THAT REQUIRE ACCESS FOR PROPER OPERATION, MAINTENANCE AND REPAIR PER RECOMMENDED MANUFACTURER CLEARANCES.
16. HVAC CONTRACTOR SHALL PROVIDE ALL FIRE STOPPING AND PIPE SLEEVES FOR ALL PIPE AND DUCT PENETRATIONS THRU FIRE RATED BUILDING ASSEMBLIES.
17. CONTRACTOR SHALL OBTAIN AND PAY ALL FEES RELATED TO PERMITTING, AND INSPECTIONS.
18. FOR ADDITIONAL REQUIREMENTS SEE SPECIFICATIONS.

FAN SCHEDULE

PARAMETER	HIGH SERVICE PUMP STATION	HIGH SERVICE PUMP STATION
EQUIPMENT ID	FAN-5611	FAN-5612
AREA SERVED	HIGH SERVICE PUMP ROOM	HIGH SERVICE PUMP ROOM
SERVICE	DUTY	BACKUP
LOCATION	ROOF	ROOF
DUTY	EXHAUST	EXHAUST
FAN TYPE	CENTRIFUGAL UP-BLAST	CENTRIFUGAL UP-BLAST
SPECIAL REQUIREMENTS	HIGH WIND RATED	HIGH WIND RATED
DRIVE TYPE	BELT DRIVE	BELT DRIVE
FAN SPEED	733 RPM	733 RPM
AIR QUANTITY	11,000 CFM	11,000 CFM
APPROX. AIR CHANGES PER HOUR	18	18
TOTAL STATIC PRESSURE	0.38" WG	0.38" WG
SOUND	21 SONES	21 SONES
FAN MOTOR	4 HP	4 HP
MAXIMUM BREAK HORSEPOWER	3 BHP	3 BHP
MOTOR TYPE	TEFC	TEFC
ELECTRICAL	460V / 3P / 60HZ	460V / 3P / 60HZ
MANUFACTURER	GREENHECK	GREENHECK
MODEL NUMBER	CUBE-300	CUBE-300
ROOF OPENING	32.5" X 32.5"	32.5" X 32.5"
WEIGHT	300	300
FAN CONTROL	HOA	HOA
BACKDRAFT DAMPER	30" X 30"	30" X 30"
BACKDRAFT DAMPER TYPE	GRAVITY	GRAVITY

FAN SCHEDULE NOTES:

1. PROVIDE COMBINATION DISCONNECT SWITCH/STARTER, SUPPLIED BY ELECTRICAL CONTRACTOR, COORDINATED BY VENTILATION CONTRACTOR.
2. PROVIDE PREMIUM EFFICIENCY TEFC ELECTRIC MOTOR WITH THERMAL OVERLOADS. ELECTRIC MOTOR WITH 1.5 SERVICE FACTOR.
3. FAN SHALL COMPLY WITH UL-705 "STANDARD FOR POWER VENTILATORS".
4. HEAVY GAUGE ALUMINUM HOUSING, BACKWARD INCLINED ALUMINUM, WITH SERVICE SWITCH NEMA 3R TOGGLE - JUNCTION BOX FACTORY MOUNTED AND WIRED, ENTIRE FAN AND HOUSING ASSEMBLY AND ACCESSORIES AND ROOF CURB WITH "HI-PRO" POLYESTER COATING - COLOR GRAY FOR ENTIRE FAN ASSEMBLY AND FACTORY MOUNTED ACCESSORIES, VARIABLE DRIVE ADJUSTABLE PULLEYS, ALUMINUM BIRD SCREEN, 24-INCH HIGH WIND RATED FACTORY ROOF CURB, BEARINGS WITH GREASE FITTINGS, AND LIFTING LUGS.
5. FAN SHALL BE AMCA SOUND AND AIR PERFORMANCE LABELED.
6. FAN AND ROOF CURBS SHALL HAVE MIAMI-DADE NOTICE OF ACCEPTANCE (NOA) PRODUCT APPROVALS. SUBMIT NOA WITH SHOP DRAWING.
7. ENTIRE FAN AND CURB ASSEMBLY SHALL BE DESIGNED TO COMPLY WITH THE FLORIDA BUILDING CODE TO WITHSTAND WIND LOADING BASED ON ASCE-7 DESIGN CRITERIA FOR WORST CASE CONDITIONS IN FLORIDA. SUBMIT SHOP DRAWINGS FOR PERMIT AND REVIEW SIGNED AND SEALED BY THE CONTRACTOR'S FLORIDA REGISTERED PROFESSIONAL ENGINEER.
8. FAN AND CURB SHALL BE INSTALLED IN COMPLIANCE WITH MIAMI-DADE NOTICE OF ACCEPTANCE AND SHOP DRAWINGS.
9. FANS SHALL BE CONTROLLED BY A HAND-OFF-AUTO SWITCH. IN THE "HAND" POSITION, THE FAN SHALL RUN CONTINUOUSLY. IN THE "OFF" POSITION, THE FAN WILL NOT RUN. IN THE "AUTO" POSITION, THE FAN SHALL BE CONTROLLED BY A THERMOSTAT.
10. FACTORY SUPPLIED GRAVITY TYPE BACKDRAFT DAMPER, FIELD MOUNTED.

REV	ISSUED FOR	DATE	BY

PROJECT ENGINEER: -
DESIGNED BY: F.A.M.
DRAWN BY: L.M.S.
CHECKED BY:
IF THIS BAR DOES NOT MEASURE 1" THEN DRAWING IS NOT TO FULL SCALE 0 1/2" 1"

GEORGE A. BROWN, PE NO. 56076

Hazen
HAZEN AND SAWYER
4000 HOLLYWOOD BOULEVARD, SUITE 750N
HOLLYWOOD, FLORIDA 33021
CERTIFICATE OF AUTHORIZATION NO. : 2771

CITY OF HALLANDALE BEACH

WATER TREATMENT PLANT
HIGH SERVICE PUMP REPLACEMENT

Hallandale Beach
PROSPERITY, INNOVATION, OPPORTUNITY

HVAC NOTES AND SCHEDULES

DATE: SEPTEMBER 2017
HAZEN NO.: 40621-000
CONTRACT N0.: 1
DRAWING NUMBER: H-01

50% SUBMITTAL

File: H:\40621-000 HALLANDALE HIGH SERVICE PUMPS\DRAWINGS\HVAC\H-01 Saved By LAURA Save Date: 2017/08/11 10:13 AM
PLOT DATE: 2017/08/11 11:14:28 AM BY: LAURA

LOUVER SCHEDULE

MARK	QTY	BUILDING	MANUFACTURER	MODEL NO.	MATERIAL	LOUVER TYPE	FRAME		MASONRY OPENING		DAMPER		DESIGN WIND PRESSURE		FREE AREA (SQFT)	AIR FLOW (CFM)	STATIC PRESSURE DROP (IN WG)	FREE AREA VELOCITY (FPM)	OPTIONS				
							FINISH	DEPTH	WIDTH	HEIGHT	GRAVITY	FIRE	+ (PSF)	- (PSF)					BIRD SCREEN	INSECT SCREEN	SECURITY BARS	FILTER	PERIMETER FLANGE
L-1	2	SODIUM HYPOCHLORITE STORAGE TANKS ROOM	GREENHECK	EHH-601D	ALUMINUM	INTAKE, FIXED, WIND-DRIVEN RAIN RESISTANT STATIONARY	KYNAR	6"	4'-0"	6'-0"					11.77	5,500	0.23	467	X				
L-2	3	SODIUM HYPOCHLORITE FEED PUMP ROOM	GREENHECK	EHH-601D	ALUMINUM	INTAKE, FIXED, WIND-DRIVEN RAIN RESISTANT STATIONARY	KYNAR	6"	2'-0"	6'-0"					5.56	717	0.23	129	X				

OUTDOOR WALL MOUNTED AIR CONDITIONER

MARK No.	LOCATION	AREA SERVED	MANUFACTURER & MODEL No.	*CAPACITY BTU/HR		FAN DATA				FILTER		ELECTRIC HEAT		ELECTRIC				NOTES
				TOTAL	SENSIBLE	RPM/BHP	CFM	H.P.	E.S.P.	NUMBER	SIZE INCHES	STAGES	K.W.	MCA	WS	OPD	V/P/HZ	
AC-1	ELECTRICAL ROOM	ELECTRICAL ROOM	BARD W36AAD-C	36,400	25,800	1100/0.33	1100	0.33	0.3	1	16 X 30 X 1	1	5	12	#14	15	460 / 3 / 60	1,2,3,4,5
AC-2	ELECTRICAL ROOM	ELECTRICAL ROOM	BARD W36AAD-C	36,400	25,800	1100/0.33	1100	0.33	0.3	1	16 X 30 X 1	1	5	12	#14	15	460 / 3 / 60	1,2,3,4,5

* 67° F EWB, 80° F EDB AND 95° F DB AMBIENT

NOTES:
1. STAINLESS STEEL CABINET. 2. 10.0 EER. 3. HONEYWELL 6000 7-DAY PROGRAMMABLE DIGITAL THERMOSTAT WITH AUTO CHANGEOVER, AND TEMPORARY SET POINT OVERRIDE FEATURE. PROVIDE WITH 5 YEAR WARRANTY. 4. PHENOLIC COATED COILS. 5. BARD SUPPLY AND RETURN AIR GRILLES.

FLORIDA BUILDING CODE TABLE 1522.3 ROOF MOUNTED EQUIPMENT HEIGHT REQUIREMENTS

WIDTH OF EQUIPMENT (INCHES)	HEIGHT OF LEGS (INCHES)
UP TO 24"	14"
25" TO 36"	18"
37" TO 48"	24"
49" TO 60"	30"
61" AND WIDER	48"

NOTE:

ROOF MOUNTED EXHAUST FANS SHALL MOUNTED A MINIMUM OF 24" ABOVE ROOF TO COMPLY WITH TABLE 1522.3 ON THE 2014 FLORIDA BUILDING CODE (MECHANICAL).

DESIGN TEMPERATURE CONDITIONS (DEGREE FAHRENHEIT)

OUTSIDE	SODIUM HYPOCHLORITE STORAGE AND PUMP ROOMS	ELECTRICAL ROOM
WINTER: 45 Dry Bulb	WINTER: 45 Dry Bulb	WINTER: 70 Dry Bulb
SUMMER: 92 Dry Bulb / 79 Wet Bulb	SUMMER: 92 Dry Bulb / 79 Wet Bulb	SUMMER: 70 Dry Bulb

REV	ISSUED FOR	DATE	BY

PROJECT ENGINEER: -
DESIGNED BY: F.A.M.
DRAWN BY: L.M.S.
CHECKED BY:
IF THIS BAR DOES NOT MEASURE 1" THEN DRAWING IS NOT TO FULL SCALE 0 1/2" 1"

GEORGE A. BROWN, PE NO. 56076

Hazen
HAZEN AND SAWYER
4000 HOLLYWOOD BOULEVARD, SUITE 750N
HOLLYWOOD, FLORIDA 33021
CERTIFICATE OF AUTHORIZATION NO. : 2771

CITY OF HALLANDALE BEACH

WATER TREATMENT PLANT
HIGH SERVICE PUMP REPLACEMENT

Hallandale Beach
PROGRESS. INNOVATION. OPPORTUNITY

HVAC NOTES AND SCHEDULES

DATE: SEPTEMBER 2017
HAZEN NO.: 40621-000
CONTRACT N0.: 1
DRAWING NUMBER: H-02

50% SUBMITTAL

File: H:\40621-000 HALLANDALE HIGH SERVICE PUMPS\DRAWINGS\HVAC\H-02 Saved By LAURA Save Date: 2017/08/09 2:15 PM
PLOT DATE: 2017/08/11 11:14:34 AM BY: LAURA

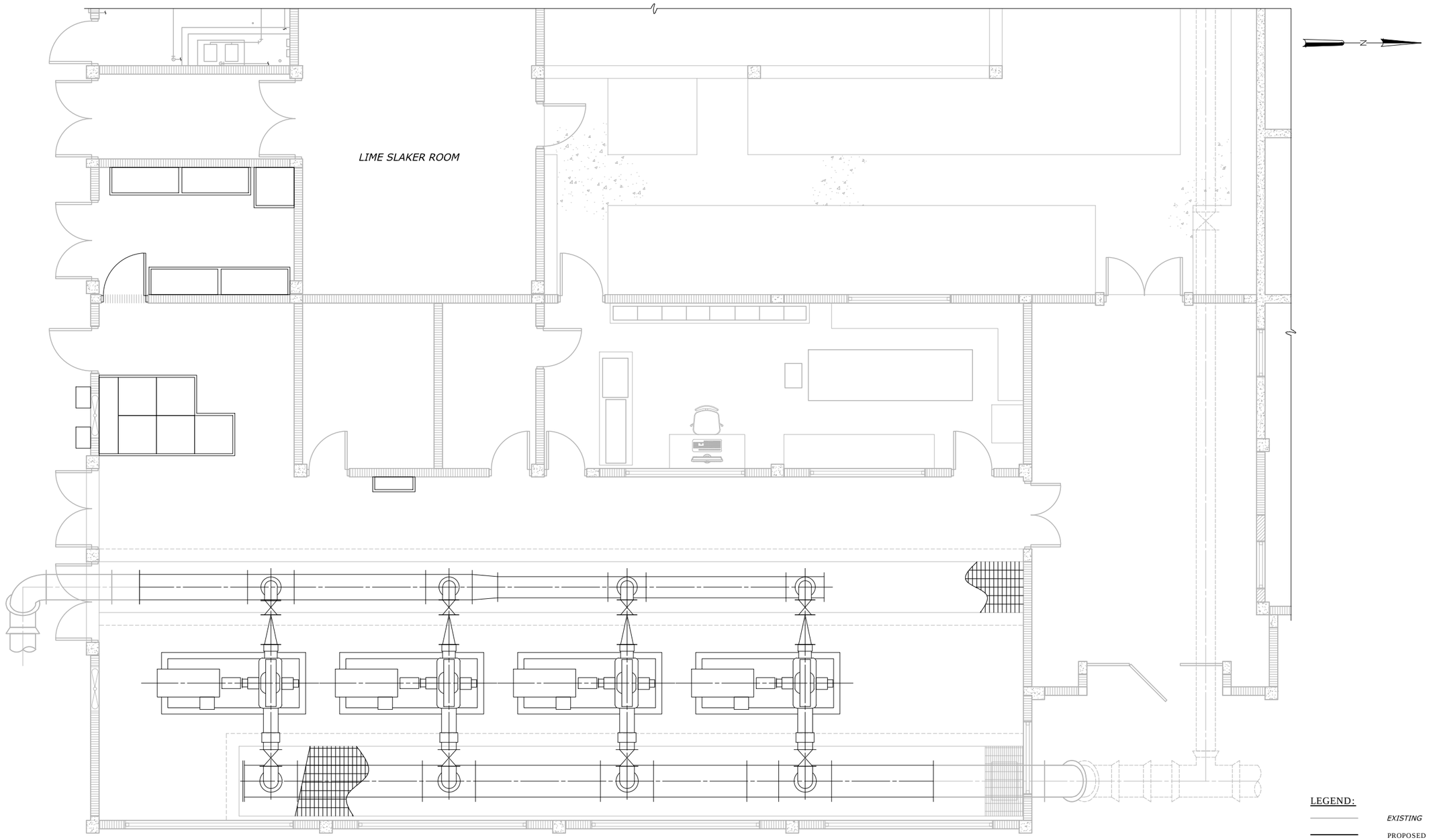

LEGEND:

EXISTING

PROPOSED

1/4"=1'-0"

1 0 1 2 3 7'

REV	ISSUED FOR	DATE	BY

PROJECT ENGINEER:	-
DESIGNED BY:	F.A.M.
DRAWN BY:	G.K.
CHECKED BY:	

IF THIS BAR DOES NOT MEASURE 1" THEN DRAWING IS NOT TO FULL SCALE 0 1/2" 1"

GEORGE A. BROWN, PE NO. 56076

Hazen

HAZEN AND SAWYER
4000 HOLLYWOOD BOULEVARD, SUITE 750N
HOLLYWOOD, FLORIDA 33021
CERTIFICATE OF AUTHORIZATION NO. : 2771

CITY OF HALLANDALE BEACH

WATER TREATMENT PLANT
HIGH SERVICE PUMP REPLACEMENT

Hallandale Beach
PRIDE-TO, INNOVATION, OPPORTUNITY

HVAC PLAN

DATE:	SEPTEMBER 2017
HAZEN NO.:	40621-000
CONTRACT N0.:	1
DRAWING NUMBER:	H-03

50% SUBMITTAL

File: H:\40621-000 HALLANDALE HIGH SERVICE PUMPS\DRAWINGS\HVAC\H-03 Saved By LAURA Save Date: 2017/08/11 10:20 AM
PLOT DATE: 2017/08/11 11:14:47 AM BY: LAURA

APPENDIX C

PHOTOGRAPHS

Photograph #1: Subject area transformer room tested for LBP.

Photograph #2: Subject area pump room tested for LBP.

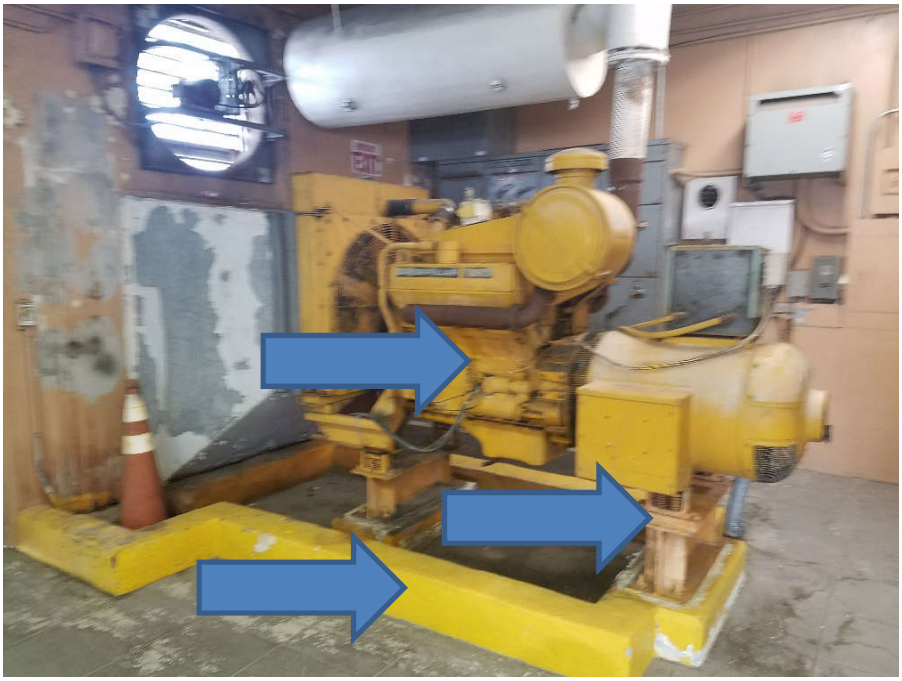

Photograph #3: LBP identified on W. diesel engine (DE), DEG support beam, DE overflow barrier.

Photograph #4: LBP identified on E. diesel engine (DE), DEG support beam, DE overflow barrier.

APPENDIX D

CERTIFICATES

United States Environmental Protection Agency

This is to certify that

Hiram A Aguiar

has fulfilled the requirements of the Toxic Substances Control Act (TSCA) Section 402, and has received certification to conduct lead-based paint activities pursuant to 40 CFR Part 745.226 as:

Risk Assessor

In the Jurisdiction of:

All EPA Administered Lead-based Paint Activities Program States, Tribes and Territories

This certification is valid from the date of issuance and expires August 01, 2020

LBP-R-9781-1

Certification #

May 24, 2017

Issued On

Adrienne Priselac, Manager, Toxics Office

Land Division

United States Environmental Protection Agency

This is to certify that

EE&G Environmental Services, LLC

has fulfilled the requirements of the Toxic Substances Control Act (TSCA) Section 402, and has received certification to conduct lead-based paint activities pursuant to 40 CFR Part 745.226

In the Jurisdiction of:

All EPA Administered Lead-based Paint Activities Program States, Tribes and Territories

This certification is valid from the date of issuance and expires September 22, 2019

LBP-10142-1

Certification #

September 30, 2016

Issued On

Michelle Price, Chief

Lead, Heavy Metals, and Inorganics Branch

City of Hallandale Beach
Water Treatment Plant
High Service Pump Replacement

Attachment B
Asbestos Pre-renovation Survey

The attached report is provided for informational purposes with the Contract Documents. The attached report is not a part of the Contract Documents. The City of Hallandale Beach and Hazen and Sawyer make no guarantee, either expressed or implied, as to its accuracy or completeness.

EE&G
Environmental Services, LLC

5751 Miami Lakes Drive
Miami Lakes, Florida 33014-2417
Tel (305) 374-8300
Fax (305) 374-9004
www.eeandg.com

September 13, 2017
EE&G Project No. 2017-2532

Mr. George A. Brown
Hazen and Sawyer
4000 Hollywood Boulevard, Suite 750N
Hollywood, Florida 33021

Subject: Asbestos Pre-renovation Survey
High Service Pump Station Replacement Project
Hallandale Beach Water Treatment Plant
630 NW 2nd Street
Hallandale Beach, Florida 33009

Dear Mr. Brown:

EE&G Environmental Services, LLC (EE&G) was retained by Hazen and Sawyer (Client) to conduct an asbestos survey of the high service pump station replacement project at the Hallandale Beach Water Treatment Plant located at 630 NW 2nd Street, Hallandale Beach, Florida. The survey was performed on August 23, 2017, by Mr. Hiram Aguiar of EE&G certified under the Asbestos Hazard Emergency Response Act, (AHERA). The purpose of this asbestos survey was to identify the presence, extent, and condition of asbestos-containing materials (ACM) that may be impacted as a result of planned renovations for compliance with the Environmental Protection Agency (EPA) National Emissions Standards for Hazardous Air Pollutants (NESHAP), Broward County and applicable State and Federal Guidelines.

INSPECTION METHODS

The specified interior building materials were inspected for suspect ACM, unless otherwise noted. Each observed suspect material was described and sampled. Samples were collected according to procedures established by EPA in 40 CFR 763.

Samples were sent to American Asbestos Laboratories in Tampa, Florida for analysis. Upon arrival at the laboratory, the samples were logged-in and stored for analysis. Analyses were performed using the polarized light microscopy (PLM) method of asbestos detection using guidelines and procedures established in the Method for the Determination of Asbestos in Bulk Building Materials (EPA-600/R-93-116 July, 1993). Results were provided as percent (%) asbestos by volume. Samples found to contain greater than 1% asbestos were considered positive and listed as ACM.

LIMITATIONS OF SURVEY

This asbestos inspection report has been prepared by EE&G in a manner consistent with industry standards exercised by members of the profession practicing under similar conditions. No other warranty, expressed or implied is made. The intent of this survey report is to assist the owner or client in locating ACM. Under no circumstances is this survey to be utilized as a proposal or a project specification document without the expressed written consent of EE&G. The survey was conducted to identify suspect ACM in accessible interior areas of the subject areas. If other areas at this location are to be impacted during planned or future renovations, a separate asbestos survey of these areas will be required. Some ACM may not have been discovered due to inaccessibility or missing/incomplete plans. Suspect materials discovered

subsequent to the issue of this survey report should be sampled and analyzed to determine asbestos content and to initiate appropriate responses.

Analyses were carried out by PLM. While the most commonly accepted analytical method for detecting asbestos in bulk materials, PLM is known to have limited resolution and may not detect extremely small asbestos fibers. Certain materials, notably vinyl floor tiles, may contain extremely fine asbestos fibers that are beyond the resolution of PLM.

EE&G's interpretations and recommendations are based upon the results of sample collection and analyses in compliance with environmental regulations, quality control and assurance standards, and the scope of work as indicated in EE&G's proposal. The results, conclusions, and recommendations contained in this report pertain to conditions observed at the time of the survey. Other conditions elsewhere in the subject building(s) may differ from those in the inspected/surveyed locations and, such conditions are unknown, may change over time, and have not been considered.

This report was prepared solely for the use of EE&G's client, and is not intended for use by third party beneficiaries. The client shall indemnify and hold EE&G harmless against liability for loss arising out of or relating to reliance by a third party on work performed thereunder, or the contents of this report. EE&G will not be held responsible for the interpretation or use by others of data developed pursuant to the compilation of this report, or for use of segregated portions of this report.

SURVEY AREA DESCRIPTION AND OBSERVATIONS

High Service Pump Station Replacement Project

The subject one story building was constructed of concrete and metal on concrete foundation. The interior walls of the subject area were observed to be painted and non-painted concrete block. The floors were unfinished concrete slab. No suspect heating, ventilation, and air-conditioning ductwork was observed in the subject area. Pipe insulation was observed on the exhaust pipe and tank of the diesel engines. EE&G reviewed Client provided plans (attached) in order to determine building materials likely to be impacted during the renovation. Upon review, EE&G designed this survey to include and be limited to sampling of suspect materials of the pumps, plumbing components, and diesel engine of the subject area.

RESULTS

The results of the PLM analyses and assessment of suspect ACM are as follows:

Asbestos-containing materials (ACM)

Asbestos was found in amounts greater than 1 percent in the following materials and therefore are considered ACM:

- White pipe insulation (east and west diesel engines). Approximately 5 linear feet (LF)
- White muffler/tank insulation (east and west diesel engines). Two mufflers/tanks.

Nonasbestos-containing materials

Asbestos was not detected in the following materials sampled during this inspection:

- Black pipe wrap.
- Black pump gasket.
- Gray stucco on concrete pump pads.
- Gray stucco on overflow barrier stucco.

The original laboratory report is attached.

CONCLUSIONS

The white insulation around the diesel engines exhaust system (pipe and muffler/tank) was found to be ACM. If other specific areas at this location are to be impacted during planned renovations, an asbestos survey of these areas will be required. Suspect materials discovered after this inspection should be sampled and analyzed to determine asbestos content and to initiate appropriate responses.

RECOMMENDATIONS FOR REGULATED ACM (RACM)

The white insulation around the diesel engines exhaust system (pipe and muffler/tank) was identified as RACM. These materials must be removed prior to renovation activities that will crush, abrade, or pulverize its matrix. Removal and disposal of these materials must be performed by a Florida-licensed Asbestos Contractor. If these materials are not to be impacted during the renovation, then no other special handling is required.

The Broward County Environmental Protection and Growth Management Department (EPGMD) requires notification of intent to renovate or demolish a structure that contains ACM. Notification must be sent at least 10 working days prior to the start of any construction activities. The general contractor should also keep a copy of this survey at the site during the entire project as proof of compliance with 40 CFR 61 (NESHAP).

EE&G appreciates the opportunity to provide you and your organization with environmental consulting services. If you have any questions or require further clarifications, please do not hesitate to contact us at (305) 374-8300.

Sincerely,

Certified AHERA Building Inspector
Senior Project Professional, EE&G

Reviewed by

Jay W. Sall, CIH
IH Practice Director, EE&G
Asbestos Consultant #AX0000011

Attachments

PLM LABORATORY RESULTS

AAL
American Asbestos Laboratories

Monday, Aug 28 2017, 12:42 PM

REPORT

SENT TO:	**HAZEN & SAWYER, P.C.** **4000 HOLLYWOOD BOULEVARD, SUITE 750N** **HOLLYWOOD, FL 33021** **GEORGE A. BROWN**	***PREPARED BY:***	AAL Asbestos Department 5005 WEST LAUREL STREET SUITE 110 TAMPA, FL 33607 NVLAP Lab Code 101775 (813) 287-1005
Phone:	**(954) 987-0066** ***Fax:*** **(954) 987-2949**		
Email:	**gbrown@hazenandsawyer.com**		

Thank you for your business.

Analysis: *Polarized Light Microscopy (PLM) with dispersion staining techniques according to the United States (US) Environmental Protection Agency (EPA) 'Method for the Determination of Asbestos in Bulk Building Materials', EPA/600/R-93-116, July 1993.*

Sample Type:	***BULK***	***Date in:***	Thursday, August 24, 2017
# of Samples:	13	***Date out:***	Monday, Aug 28 2017
		Transported:	FEDEX
Work Order#	T1708084	***Sampled by:***	HIRAM AGUIAR
AAL Project#	2017-2532	***Received by:***	KIA
Project:	COHBWTP-HIGH SERVICE PUMP STATION		

Authorized Analyst
KHANDAKER ANAM

Laboratory Manager
KHANDAKER ANAM

Due to the small size of asbestos fibers associated with vinyl floor tiles, TEM analysis is recommended for all floor tiles containing <1% or no detectable asbestos by visual estimation.

This report may not be reproduced except in full, without the written approval of AAL. AAL will not be held responsible for the use of its reports issued in part to third parties or authorized agents of the client.

This report shall not be used by the client to claim product endorsement by NVLAP nor any agency of the United States Government. All NVLAP reports displaying NVLAP logo must have at least one signature to be valid.

The following analytical results presented in this report pertain only to the samples analyzed. American Asbestos Laboratories assumes no responsibility for whether the samples accurately represent the material in question

AAL

LABORATORY BULK SAMPLE ANALYSIS REPORT

CLIENT: HAZEN & SAWYER, P.C.
PROJECT: COHBWTP-HIGH SERVICE PUMP STATION
Work Order: T1708084

Asbestos analysis of bulk materials via EPA 600/R/93/116 Method using Polarized Light Miscroscopy (PLM).

Dash No.	ANA	DESCRIPTION	LOCATION	Sample No.	PERCENT ASBESTOS FIBERS CHRY	AMOS	CROC	TREM	ANTH	OTHER	%NON-ASB NON FIB	FIBERS
01 A	KIA	WHITE PIPE INSULATION	DIESEL ENGINE	1	20 - 25						Other: 65- 75	Cellulose: 5- 10
02 A	KIA	WHITE TANK INSULATION	DIESEL ENGINE	2	15 - 20						Other: 70- 80	Cellulose: 5- 10
03 A	KIA	WHITE PIPE INSULATION	EMERGENCY GENERATO	0	20 - 25						Other: 73- 79	Cellulose: 1- 2
04 A	KIA	WHITE TANK INSULATION	EMERGENCY GENERATO	4	20 - 25						Other: 65- 75	Cellulose: 5- 10
05 A	KIA	BLACK PIPE WRAP	DIESEL ENGINE	5	NO ASBESTOS DETECTED						Other: 95- 98	Synthetec: 2- 5
05 B	KIA	BLACK PIPE WRAP	EMERGENCY GENERATO	6	NO ASBESTOS DETECTED						Other: 95- 98	Synthetec: 2- 5
06 A	KIA	BLACK GASKET	PUMP 1	7	NO ASBESTOS DETECTED						Other: 98- 99	Cellulose: 1- 2

Report Continued on Next Page

CLIENT: HAZEN & SAWYER, P.C.
PROJECT: COHBWTP-HIGH SERVICE PUMP STATION
Work Order: T1708084

LABORATORY BULK SAMPLE ANALYSIS REPORT CONTINUED

Dash No.	ANA	DESCRIPTION	LOCATION	Sample No.	PERCENT ASBESTOS FIBERS						%NON-ASB	
					CHRY	AMOS	CROC	TREM	ANTH	OTHER	NON FIB	FIBERS
07 A	KIA	GREY STUCCO ON CONCRETE PAD	PUMP 1	8	NO ASBESTOS DETECTED						Other: 98- 99	Cellulose: 1- 2
07 B	KIA	GREY STUCCO ON CONCRETE PAD	PUMP 2	9	NO ASBESTOS DETECTED						Other: 98- 99	Cellulose: 1- 2
07 C	KIA	GREY STUCCO ON CONCRETE PAD	PUMP 3	10	NO ASBESTOS DETECTED						Other: 98- 99	Cellulose: 1- 2
07 D	KIA	GREY STUCCO ON CONCRETE PAD	PUMP 4	11	NO ASBESTOS DETECTED						Other: 98- 99	Cellulose: 1- 2
08 A	KIA	GREY OVERFLOW BARRIER STUCCO	EMERGENCY GENERATO	12	NO ASBESTOS DETECTED						Other: 98- 99	Cellulose: 1- 2
08 B	KIA	GREY OVERFLOW BARRIER STUCCO	DIESEL ENGINE	13	NO ASBESTOS DETECTED						Other: 98- 99	Cellulose: 1- 2

Quality Control Officer

Analytical results pertain only to the sample(s) analyzed. All Samples analyzed were acceptable for analysis.

ABBREVIATIONS: ANA = Analyst; ASB = Asbestos; CHRY = Chrysotile; AMOS = Amosite; CROC = Crocidolite; TERM = Term/Act; ANTH = Anthophylite; ACT = Actinolite; AL = Aluminum; BLK = Black; BACK = Backing; BL = Blue; BRN = Brown; C = Cellulose; CALC = Calcareous; CPT = Carpet; CTL = Ceiling Tile; CEM = Cement; COV = Cover; DEB = Debris; FG = Fiberglass; FIB = Fibrous; MAS = Mastic; MAT = Material; MIC = Micaceous; MW = Mineral Wool; ORG = Orange; PAI = Paint; PAP = Paper; PL = Plaster; PLAS = Plastic; PWDR = Powder; RCF = Refractory Ceramic Fiber; RUB = Rubber; SIL = Silver; SR = Sheet Rock; S = Synthetic; SUB = Substance; TEXT = Textured; TR = Trace; TRAN = Transite; TREM = Tremolite; VERM = Vermiculite; VYL = Vinyl; W = Wollastonite; WH = White; YEL = Yellow.

T170884

EE&G

EE&G Environmental Services, LLC
5751 Miami Lakes Drive
Miami Lakes, Florida 33014

BULK TRANSMITTAL FORM
CHAIN OF CUSTODY

CLIENT: Hazen and Sawyer

CLIENT CONTACT: George A. Brown

DATE COLLECTED: 8-23-17

DATE SENT: "

STOP AT FIRST POSITIVE: Y (N) (circle one)

PROJECT: COHBWTP - High Service Pump ST.

PROJECT NUMBER: 2017-2532

PHASE/TASK: Survey

DATE VERBAL NEEDED: 24 Hours

DATE WRITTEN NEEDED: "

SAMPLE PREFIX _____

SAMPLE NUMBER	COLOR	SAMPLE DESCRIPTION	SAMPLE LOCATION
1.	White	Pipe insulation	Diesel Engine
2.	↓	Tank	↓
3.		Pipe	Emergency Generator
4.		Tank	↓
5.	Black	Pipe wrap	Diesel Engine
6.	↓	↓	Emergency Generator
7.		Gasket	Pump 1
8.	Gray	Stucco on concrete pad	Pump 1
9.	↓	↓	2
10.			3
11.			4
12.		overflow basin stucco	Emergency Generator
13.		↓	Diesel Engine
14.			
15.			
16.			
17.			
18.			
19.			
20.			

CHAIN OF CUSTODY:

DATE/TIME	PRINT NAME/SIGNATURE	PURPOSE
8-23-17	Hiram Aguiar	C T A
		C T A
		C T A

C= Collection T= Transportation A= Analysis

RECEIVED
AUG 24 2017

FIGURES

CITY OF HALLANDALE BEACH
WATER TREATMENT PLANT

HIGH SERVICE PUMP STATION REPLACEMENT

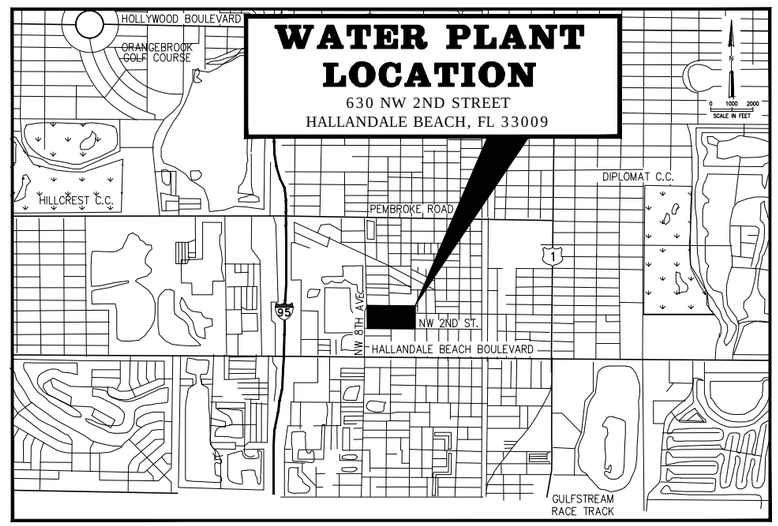

LOCATION MAP

NTS

Hazen

HAZEN AND SAWYER
4000 HOLLYWOOD BOULEVARD, SUITE 750N
HOLLYWOOD, FLORIDA 33021
CERTIFICATE OF AUTHORIZATION NO. : 2771

50% SUBMITTAL

SEPTEMBER 2017

TITLE SHEET AND LOCATION MAP
SHEET 1 OF 20
DRAWING No. G-01

50% SUBMITTAL

PLOT DATE: 8/11/2017 11:08 AM BY: LAURA
XREFS=
File = H:\40621-000 Hallandale High Service Pumps\Drawings\Gen\G-01 Saved by CALI3 Save date = 8/4/2017 10:39 AM

LIST OF DRAWINGS

GENERAL

SHEET TITLE	SHEET DESCRIPTION
G-01	TITTLE SHEET AND LOCATION MAP
G-02	LIST OF DRAWINGS
G-03	NOTES
G-04	ABBREVIATIONS, SYMBOLS AND LEGEND

CIVIL

C-01	EXISTING SITE PLAN
C-02	STAGING PLAN
C-03	PROPOSED SITE PLAN
C-04	YARD PIPING KEY MAP
C-05	TANK LEVEL TRANSMITTER REPLACEMENT

MECHANICAL

M-01	HIGH SERVICE PUMPS DEMOLITION PLAN
M-02	HIGH SERVICE PUMPS DEMOLITION PHOTOS SHEET 1
M-03	HIGH SERVICE PUMPS DEMOLITION PHOTOS SHEET 2
M-04	HIGH SERVICE PUMPS PROPOSED PLAN
M-05	HIGH SERVICE PUMPS SECTION
M-06	
M-07	
M-08	
M-09	MECHANICAL DETAILS SHEET 1
M-10	MECHANICAL DETAILS SHEET 1

STRUCTURAL

S-01	GENERAL STRUCTURAL NOTES
S-02	HIGH SERVICE PUMPS DEMOLITION PLAN
S-03	HIGH SERVICE PUMPS PROPOSED PLAN

ARCHITECTURAL

A-01	PUMP STATION LIFE SAFETY PLAN

ELECTRICAL

SHEET TITLE	SHEET DESCRIPTION
E-01	LEGEND AND SYMBOLS
E-02	GENERAL NOTES AND ABBREVIATIONS
E-03	OVERALL SITE PLAN
E-04	EXISTING ONE-LINE DIAGRAM
E-05	PROPOSED ONE-LINE DIAGRAM
E-06	HIGH SERVICE PUMPS PROPOSED PLAN
E-07	ELECTRICAL ROOM PLAN
E-08	GENERATOR BUILDING
E-09	ELECTRICAL DEMOLITION PHOTOS
E-10	LIME PLANT MCC-2 MODIFICATION

INSTRUMENTATION

I-01	INSTRUMENTATION SYMBOLS AND LEGEND
I-02	SCADA NETWORK DIAGRAM
I-03	HIGH SERVICE PUMP STATION P&ID
I-04	INSTRUMENTATION DETAILS

HVAC

H-01	HVAC NOTES AND SCHEDULES
H-02	HVAC NOTES AND SCHEDULES
H-03	HVAC PLAN

REV	ISSUED FOR	DATE	BY

PROJECT ENGINEER: -
DESIGNED BY: G.A.B.
DRAWN BY: G.B.
CHECKED BY:
IF THIS BAR DOES NOT MEASURE 1" THEN DRAWING IS NOT TO FULL SCALE 0 1/2" 1"

GEORGE A. BROWN, PE NO. 56076

Hazen
HAZEN AND SAWYER
4000 HOLLYWOOD BOULEVARD, SUITE 750N
HOLLYWOOD, FLORIDA 33021
CERTIFICATE OF AUTHORIZATION NO. : 2771

CITY OF HALLANDALE BEACH

WATER TREATMENT PLANT
HIGH SERVICE PUMP REPLACEMENT

Hallandale Beach
PROGRESS. INNOVATION. OPPORTUNITY

LIST OF DRAWINGS

DATE: SEPTEMBER 2017
HAZEN NO.: 40621-000
CONTRACT N0.: 1
DRAWING NUMBER: G-02

50% SUBMITTAL

File: H:\40621-000 HALLANDALE HIGH SERVICE PUMPS\DRAWINGS\GEN\G-02 Saved By ADRIANA Save Date: 2017/09/13 2:22 PM
PLOT DATE: 2017/09/11 11:19:20 AM BY: LAURA

GENERAL NOTES

1. DRAWINGS THAT ILLUSTRATE EXISTING SITE, STRUCTURES, PIPING, ELECTRICAL AND EQUIPMENT ARE BASED UPON RECORD DRAWINGS AVAILABLE UPON REQUEST FOR GENERAL INFORMATIONAL PURPOSES ONLY. REFERENCE THE SECTION ENTITLED "SUMMARY OF WORK".
2. FIELD OBSERVATIONS INDICATE THAT FIELD CONDITIONS DO NOT FULLY MATCH THE ABOVE REFERENCED RECORD DRAWINGS.
3. ALL ELEVATIONS ARE BASED ON THE NATIONAL GEODETIC VERTICAL DATUM OF 1929 (NGVD '29)
4. LOCATION, SIZE, MATERIAL, ALIGNMENT AND ELEVATIONS OF EXISTING FACILITIES HAVE BEEN DETERMINED FROM AVAILABLE RECORDS. THIS INFORMATION IS FURNISHED AS A GUIDE FOR THE CONTRACTOR. THE ENGINEER AND THE OWNER DO NOT GUARANTEE THE ACCURACY OF THESE DATA. THE CONTRACTOR SHALL BE FULLY RESPONSIBLE FOR DETERMINING THE LOCATION AND PROTECTING ALL TYPES OF UTILITIES AND STRUCTURES ENCOUNTERED DURING THE COURSE OF OPERATION ON THIS PROJECT.
5. CONTRACTOR RETAINS FULL RESPONSIBILITY FOR FIELD VERIFICATION OF ALL IMPROVEMENTS TO BE REMOVED FOR THIS WORK. VERIFICATION SHALL INCLUDE STRUCTURAL, ARCHITECTURAL, HVAC, PLUMBING, PROCESS PIPING, ELECTRICAL, IRRIGATION, CONTROLS, EQUIPMENT, FILTER MEDIA AND ANY AND ALL OTHER EXISTING EQUIPMENT WITHIN THE BOUNDARY OF THE WORK, WHETHER SHOWN OR NOT.
6. THE CONTRACTOR IS REQUIRED TO OBTAIN WRITTEN APPROVAL FROM THE ENGINEER FOR ANY DEVIATIONS FROM THE PLANS AND/OR SPECIFICATIONS.
7. THE CONTRACTOR SHALL FIELD VERIFY ALL DIMENSIONS AND ELEVATIONS PRIOR TO COMMENCEMENT OF CONSTRUCTION AND SHALL NOTIFY THE ENGINEER IMMEDIATELY OF ANY REQUIRED PLAN DEVIATIONS.
8. THE CONTRACTOR SHALL BE RESPONSIBLE FOR OBTAINING A DEWATERING PERMIT FROM THE SOUTH FLORIDA WATER MANAGEMENT DISTRICT IF REQUIRED.
9. RESTRAINED JOINT PIPE SHALL BE USED FOR ALL PIPING ON THIS PROJECT. THRUST BLOCKS SHALL NOT BE PERMITTED.
10. CONTRACTOR SHALL PROVIDE A MINIMUM VERTICAL CLEARANCE OF 6" BETWEEN ALL LINES THAT CROSS. CROSSINGS WITH POTABLE WATER LINES SHALL BE AS SHOWN ON THE DRAWINGS.
11. THE CONTRACTOR SHALL RECORD ELEVATIONS OF EXISTING BURIED UTILITIES AT ALL ENCOUNTERED CROSSINGS WITH NEW WORK.
12. ALL CONNECTIONS TO EXISTING PIPING SHALL BE MADE UNDER THE DIRECTION OF THE CITY.
13. MINIMUM DEPTH OF COVER FOR ALL UNDERGROUND PIPING SHALL BE 36" EXCEPT WHERE SHOWN OTHERWISE ON PLANS.
14. PIPE DEFLECTION SHALL NOT EXCEED 75% OF THE MAXIMUM DEFLECTION RECOMMENDED BY THE MANUFACTURER.
15. THE CONTRACTOR SHALL BE RESPONSIBLE AT ALL TIMES THROUGHOUT THE DURATION OF CONSTRUCTION AND UNTIL ACCEPTANCE OF THE WORK FOR THE PROTECTION OF EXISTING AND NEWLY INSTALLED UTILITIES FROM DAMAGE OR DISRUPTION OF SERVICE.
16. THE CONTRACTOR SHALL ADJUST TO FINAL GRADE ALL EXISTING UTILITY CASTINGS INCLUDING VALVE BOXES, MANHOLES, HAND HOLES, PULL BOXES, INLETS AND SIMILAR STRUCTURES IN CONSTRUCTION AREA TO BE OVERLAID WITH ASPHALT.
17. EXISTING BURIED PIPE AND CONDUIT 2" DIAMETER AND SMALLER IS NOT NECESSARILY SHOWN. ELECTRICAL AND INSTRUMENTATION DUCT BANKS NOT SHOWN. WHEN EXCAVATING, THE CONTRACTOR SHALL TAKE ALL NECESSARY PRECAUTIONS TO AVOID DAMAGE TO UNDERGROUND UTILITIES.
18. THE CONTRACTOR SHALL MAKE EXPLORATORY EXCAVATIONS TO VERIFY LOCATIONS AND ELEVATIONS OF UNDERGROUND UTILITIES THAT MAY INTERFERE WITH THE WORK. THE NUMBER OF EXPLORATORY EXCAVATIONS SHALL BE SUFFICIENT TO DETERMINE ALIGNMENT, LOCATION AND ELEVATION.
19. THE WORK TO BE PERFORMED UNDER THESE CONTRACT DOCUMENTS IS AT A FUNCTIONING WATER TREATMENT PLANT WITH A PERMITTED WATER SUPPLY WELLFIELD. THE CONTRACTOR SHALL COMPLY WITH REQUIREMENTS OF THE SPECIFICATIONS, REGULATORY AGENCIES, AND FACILITY OPERATIONS STAFF AT ALL TIMES.
20. THE CONTRACTOR IS ADVISED THAT ALL FITTINGS THAT MAY BE REQUIRED TO MAKE UP VERTICAL ALIGNMENT MAY NOT BE SHOWN ON THE YARD PIPING PLANS.
21. CONTRACTOR SHALL RESTORE ALL LANDSCAPING AND SODDING IMPACTED BY CONSTRUCTION TO ITS ORIGINAL CONDITION OR BETTER.
22. CONTRACTOR SHALL DISPOSE OF ALL DEMOLISHED MATERIALS IN ACCORDANCE WITH LOCAL, STATE AND FEDERAL REGULATIONS.
23. ALL IMPACTED CONSTRUCTION AREAS SHALL BE RETURNED TO PRECONSTRUCTION CONDITIONS OR BETTER BY CONTRACTOR.

EROSION AND SEDIMENT CONTROL NOTES

1. THE CONTRACTOR SHALL PREPARE, OBTAIN APPROVAL OF AND IMPLEMENT A STORM WATER POLLUTION PREVENTION PLAN PER THE SPECIFICATION TITLED "TEMPORARY EROSION AND SEDIMENT CONTROL".
2. CONTRACTOR SHALL EMPLOY BEST MANAGEMENT PRACTICES THROUGHOUT CONSTRUCTION IN ORDER TO ENSURE POLLUTION PREVENTION. CONTRACTOR SHALL COMPLY WITH ALL LOCAL STATE AND OTHER GOVERNMENTAL ENVIRONMENTAL REGULATIONS THROUGHOUT CONSTRUCTION.
3. DURING CONSTRUCTION ALL CATCH BASINS TO BE EQUIPPED WITH FILTER FABRIC AND HAY BALES OVER GRATES.
4. SILT FENCES SHALL BE INSTALLED AS NECESSARY TO CONTROL OR PREVENT DISCHARGE OF SEDIMENT ONTO ADJACENT UNDISTURBED AREAS, OR OFF-SITE AREAS.
5. ALL AREAS DISTURBED DURING CONSTRUCTION SHALL BE STABILIZED WITHIN A REASONABLE PERIOD OF TIME TO ASSURE MINIMUM EROSION OF SOILS.
6. NO LAND CLEARING OR GRADING SHALL BEGIN UNTIL ALL EROSION CONTROL MEASURES HAVE BEEN INSTALLED.
7. ALL EXPOSED AREAS SHALL BE SODDED AS SPECIFIED WITHIN 30 DAYS OF FINAL GRADING.
8. MAINTAIN EROSION CONTROL MEASURES AFTER EACH RAIN AND AT LEAST ONCE A WEEK.
9. THIS PLAN SHALL NOT BE CONSIDERED ALL INCLUSIVE AS THE CONTRACTOR SHALL TAKE ALL NECESSARY PRECAUTIONS TO PREVENT SOIL SEDIMENT FROM LEAVING THE SITE.
10. CONTRACTOR SHALL COMPLY WITH ALL STATE AND LOCAL ORDINANCES THAT APPLY.
11. ADDITIONAL EROSION AND SEDIMENT CONTROL MEASURES WILL BE INSTALLED IF DEEMED NECESSARY BY CITY, COUNTY, AND STATE OF FLORIDA ON SITE INSPECTION, AT NO ADDITIONAL COST TO THE OWNER.
12. LAND DISTURBING ACTIVITIES SHALL NOT COMMENCE UNTIL APPROVAL TO DO SO HAS BEEN RECEIVED BY GOVERNING AUTHORITIES.
13. IF INSTALLATION OF STORM DRAINAGE SYSTEM (WHERE SHOWN ON THE DRAWINGS) SHOULD BE INTERRUPTED BY WEATHER OR NIGHTFALL, THE PIPE ENDS SHALL BE COVERED WITH FILTER FABRIC.
14. ALL EXISTING STRUCTURES, FENCING, TREES, AND ETC. SHOW TO BE REMOVED ON THE DEMOLITION DRAWINGS SHALL BE REMOVED AND DISPOSED OF OFF SITE. BURNING WILL NOT BE ALLOWED ON-SITE.
15. CONTRACTOR SHALL BE RESPONSIBLE TO TAKE WHATEVER MEANS NECESSARY TO ESTABLISH PERMANENT SOIL STABILIZATION.
16. CONTRACTOR IS TO PROVIDE EROSION CONTROL/SEDIMENTATION BARRIER (HAY BALES OR SILTATION CURTAIN) TO PREVENT SILTATION OF ADJACENT PROPERTY, STREETS, STORM SEWERS AND WATER WAYS. IN ADDITION CONTRACTOR SHALL PLACE STRAW, MULCH OR OTHER SUITABLE MATERIAL ON GROUND IN AREAS WHERE CONSTRUCTION RELATED TRAFFIC IS TO ENTER AND EXIT SITE IF IN THE OPINION OF THE ENGINEER AND/OR LOCAL AUTHORITIES IF EXCESSIVE QUANTITIES OF EARTH ARE TRANSPORTED OFF-SITE EITHER BY NATURAL DRAINAGE OR BY VEHICULAR TRAFFIC. THE CONTRACTOR IS TO REMOVE AND CLEAN SAID EARTH TO THE SATISFACTION OF THE ENGINEER AND/OR AUTHORITIES. EROSION CONTROL BARRIER SHALL BE ESTABLISHED AS THE FIRST ITEM OF WORK.

PROPERTY AND FLOOD NOTES

PROPERTY INFO:

FOLIO No.: 514228010010

ADDRESS:

630 NW 2ND STREET
HALLANDALE BEACH, FL 33009

LOCATION INFO:

TOWNSHIP: 51S
RANGE: 42E
SECTION: 28
LATITUDE: N25° 59' 18.24"
LONGITUDE: W80° 09' 18"

FLOOD INFO:

100 YEAR FLOOD ELEVATION: 8.3 (NGVD 1929)
SOURCE: BROWARD COUNTY FLOOD MAP MARCH, 2000.

REV	ISSUED FOR	DATE	BY

PROJECT ENGINEER: -
DESIGNED BY: G.A.B.
DRAWN BY: G.B.
CHECKED BY:
IF THIS BAR DOES NOT MEASURE 1" THEN DRAWING IS NOT TO FULL SCALE 0 1/2" 1"

GEORGE A. BROWN, PE NO. 56076

Hazen
HAZEN AND SAWYER
4000 HOLLYWOOD BOULEVARD, SUITE 750N
HOLLYWOOD, FLORIDA 33021
CERTIFICATE OF AUTHORIZATION NO. : 2771

CITY OF HALLANDALE BEACH

WATER TREATMENT PLANT
HIGH SERVICE PUMP REPLACEMENT

Hallandale Beach
PROSPERITY, INNOVATION, OPPORTUNITY

NOTES

DATE: SEPTEMBER 2017
HAZEN NO.: 40621-000
CONTRACT N0.: 1
DRAWING NUMBER: G-03

50% SUBMITTAL

File: H:\40621-000 HALLANDALE HIGH SERVICE PUMPS\DRAWINGS\GEN\G-03 Saved By LAURA Save Date: 2017/08/11 8:23 AM
PLOT DATE: 2017/08/11 11:08:47 AM BY: LAURA

SYMBOLS

- SOLENOID
- MOTOR OPERATED
- BALL VALVE
- BUTTERFLY VALVE/DAMPER
- CHECK VALVE
- GATE VALVE
- PLUG VALVE
- THREE WAY VALVE
- PRESSURE REDUCING/ RELIEF VALVE
- PRESSURE REGULATING VALVE
- VENTURI METER
- FLAME ARRESTER
- HOSE BIBB (PLAN)
- HOSE BIBB (ELEVATION)
- MECHANICAL COUPLING
- HARNESSED MECHANICAL COUPLING
- GROOVED COUPLING
- HARNESSED EXPANSION JOINT
- EXPANSION JOINT
- GAUGE
- UNION
- MAGNETIC METER
- VENTURI METER
- FIRE HYDRANT
- MANHOLE
- SEALED MANHOLE
- PROPOSED PIPELINE/STRUCTURE
- EXISTING UTILITIES/STRUCTURE
- PROPOSED PIPELINE (DOUBLE LINE IF SCALE OF DRAWING PERMITS)
- WELDED JOINT
- FLANGED JOINT
- MECHANICAL JOINT
- SOCKET WELDED JOINT
- PROPOSED STRUCTURE OR FACILITY
- REDUCER (SINGLE LINE)
- REDUCER (DOUBLE LINE)
- CONCRETE PIPE SUPPORT

ABBREVIATIONS

VALVES, FITTINGS, ETC.

ARV	AIR RELIEF VALVE
BV	BALL VALVE
BF	BLIND FLANGE
BFV	BUTTERFLY VALVE
CGV	CHLORINE GAS VALVE UNDER VACUUM
CV	CHECK VALVE
CPLG	COUPLING
ED	EQUIPMENT DRAIN
EXP JT	EXPANSION JOINT
FH	FIRE HYDRANT
FTG	FITTING
FLG	FLANGE
FD	FLOOR DRAIN
GV	GATE VALVE
HB	HOSE BIBB
LR	LONG RADIUS
MJ	MECHANICAL JOINT
MOV	MOTOR OPERATED VALVE
NPT	NATIONAL PIPE THREAD
PE	PLAIN END
PV	PLUG VALVE
PS	PUMP STATION
PRV	PRESSURE RELIEF VALVE
RD	ROOF DRAIN
SOV	SOLENOID OPERATED VALVE
THD	THREADED
VAC	VACUUM

PIPING

CU	COPPER OR CUBIC
DIP	DUCTILE IRON PIPE
FM	FORCE MAIN
GSP	GALVANIZED STEEL PIPE
IPS	IRON PIPE SIZE
PVC	POLYVINYLCHLORIDE
PCCP	PRECAST CONCRETE CYLINDER PIPE
RCP	REINFORCED CONCRETE PIPE

GENERAL

A/C	AIR CONDITIONER
AL, ALUM	ALUMINUM
APPROX	APPROXIMATE
AFF	ABOVE FINISHED FLOOR
ARCH	ARCHITECTURAL
AS	ANTISCALANT
BD	BLOWDOWN
BLK	BLOCK
BOTT	BOTTOM
BP	BID PACKAGE
BLDG	BUILDING
BSP	BACTERIOLOGICAL SAMPLING POINT
BWD	BACKWASH DRAIN
CB	CATCH BASIN
CA	SODIUM HYDROXIDE (CAUSTIC)
CC	CENTER TO CENTER
CHK'D	CHECKERED
CL	CENTER LINE
CLG	CHLORINE GAS
CLS	CHLORINE SOLUTION
CO	CLEAN OUT
CN	CONCENTRATE WATER
CLGV	CHLORINE GAS - VACUUM
CLR	CLEAR
COL	COLUMN
CO	COMPANY
CONC	CONCRETE
CONST	CONSTRUCTION
CONT	CONTINUOUS
CSD	CLEANING SOLUTION DRAIN
CSR	CLEANING SOLUTION RETURN
CS	CHLORINE SOLUTION
CSS	CLEANING SOLUTION SUPPLY
CW	CONDITIONED WATER
D	DRAIN
DET	DETAIL
DIAG	DIAGONAL
DIA	DIAMETER
DIM	DIMENSION
DISCH	DISCHARGE
DWL	DOWEL
DN	DOWN
DWG	DRAWING
EA	EACH
EE	EACH END
EF	EACH FACE
EW	EACH WAY
ECC	ECCENTRIC
EFF	EFFLUENT
ELEC	ELECTRIC
EL, ELEV	ELEVATION
EOP	EDGE OF PAVEMENT
EQUIP	EQUIPMENT
EXH	EXHAUST
EXIST, EX	EXISTING
EXP	EXPANSION
EXT	EXTERIOR
FIN	FINISH
FE	FIRE EXTINGUISHER
FL	FLOOR
FF	FINISH FLOOR
FLG	FLANGED
FM	FORCE MAIN
FR	FUEL RETURN
FS	FUEL SUPPLY
FSS	FLUSHING SOLUTION SUPPLY
FTG	FOOTING
FW	FINISHED WATER
GALV	GALVANIZED
GPM	GALLONS PER MINUTE
HP	HIGH POINT
HWL	HIGH WATER LEVEL
HORIZ	HORIZONTAL
HWH	HOT WATER HEATER
INFL	INFLUENT
INJ	INJECTION
ID	INSIDE DIAMETER
INSUL	INSULATION
INV	INVERT
JT	JOINT
LG	LONG
LN	LINE
LP	LOW POINT
LWL	LOW WATER LEVEL
MH	MANHOLE
MANUF	MANUFACTURER
MGD	MILLION GALLONS PER DAY
MO	MASONRY OPENING
MAX	MAXIMUM
MECH	MECHANICAL
MIN	MINIMUM
MJ	MECHANICAL JOINT
MOV	MOTOR OPERATED VALVE
NAVD	NORTH AMERICAN VERTICAL DATUM
NF	NANOFILTRATION
NPW	NON POTABLE WATER
NIC	NOT IN CONTRACT
NTS	NOT TO SCALE
NO	NUMBER
OC	ON CENTER
OPNG	OPENING
OD	OUTSIDE DIAMETER
OF	OUTSIDE FACE
OF	OVERFLOW
ORP	OXIDATION REDUCTION POTENTIAL
PCSR	PERMEATE CLEANING SOLUTION RETURN
PM	PERMEATE WATER
PW	POTABLE WATER
LBS/FT	POUNDS PER FOOT
P/L	PROPERTY LINE
RAD, R	RADIUS
RECIR	RECIRCULATION
RED	REDUCING
REHAB	REHABILITATION
REINF	REINFORCING
REQ'D	REQUIRED
RJ	RESTRAINED JOINT
RO	REVERSE OSMOSIS
ROT	ROTATED
R/W, ROW	RIGHT OF WAY
RW	RAW WATER
S	SAMPLE
SAN	SANITARY
SFA	SULFURIC ACID
SECT	SECTION
SEQ	SEQUESTRANT
SH	SODIUM HYPOCHLORITE
SHT	SHEET
SI	SCALE INHIBITOR
SL	SLUDGE
SOF	SOFTENED WATER
SPD	SUMP PUMP DISCHARGE
SPEC	SPECIFICATION
SQ	SQUARE
SS	SANITARY SEWER
SST	STAINLESS STEEL
STL	STEEL
STRUC	STRUCTURAL
SYMM	SYMMETRICAL
TBD	TO BE DETERMINED
TEMP	TEMPORARY
THK	THICK
TI	TEMPERATURE INDICATOR
TOC	TOP OF CONCRETE
TOS	TOP OF SLAB
TYP	TYPICAL
VTR	VENT THROUGH ROOF
VERT	VERTICAL
WTR	WATER
W/L	WATER LEVEL
WWF	WELDED WIRE FABRIC
W/	WITH

SECTION AND DETAIL IDENTIFICATION

SECTION IDENTIFICATION

(1) SECTION CUT ON DRAWING G-1:

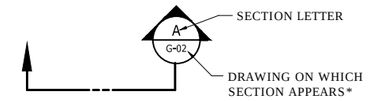

(2) ON DRAWING G-2 THIS SECTION IS IDENTIFIED AS:

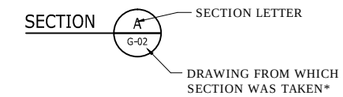

DETAIL IDENTIFICATION

(1) DETAIL CALL-OUT ON DRAWING G-1 AS:

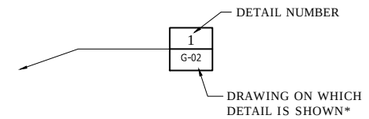

(2) ON DRAWING G-2 THIS DETAIL IDENTIFIED AS:

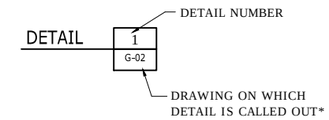

STANDARD DETAIL IDENTIFICATION

(1) DETAIL CALL-OUT ON PLAN OR SECTION:

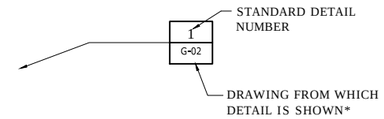

(2) ON DRAWING G-4 THIS DETAIL IDENTIFIED AS:

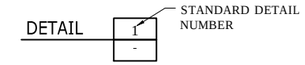

NOTE: IF PLAN AND SECTION (OR DETAIL CALL-OUT AND DETAIL) ARE SHOWN ON SAME DRAWING, DRAWING NUMBER IS REPLACE BY A LINE.

NOTES:

1. ELECTRICAL SYMBOLS SHOWN ON ELECTRICAL SHEETS.
2. FOR WELDING SYMBOLS USE AMERICAN WELDING SOCIETY STANDARD SYMBOLS. SEE AMERICAN INSTITUTE OF STEEL CONSTRUCTION MANUAL.

REV	ISSUED FOR	DATE	BY

PROJECT ENGINEER:	-
DESIGNED BY:	G.A.B.
DRAWN BY:	G.B.
CHECKED BY:	
IF THIS BAR DOES NOT MEASURE 1" THEN DRAWING IS NOT TO FULL SCALE	0 1/2" 1"

GEORGE A. BROWN, PE NO. 56076

Hazen
HAZEN AND SAWYER
4000 HOLLYWOOD BOULEVARD, SUITE 750N
HOLLYWOOD, FLORIDA 33021
CERTIFICATE OF AUTHORIZATION NO. : 2771

CITY OF HALLANDALE BEACH

WATER TREATMENT PLANT
HIGH SERVICE PUMP REPLACEMENT

Hallandale Beach
PROGRESS, INNOVATION, OPPORTUNITY

ABBREVIATIONS,
SYMBOLS AND LEGEND

DATE:	SEPTEMBER 2017
HAZEN NO.:	40621-000
CONTRACT NO.:	1
DRAWING NUMBER:	G-04

50% SUBMITTAL

File: H:\40621-000 HALLANDALE HIGH SERVICE PUMPS\DRAWINGS\GEN\G-04 Saved By LAURA Save Date: 2017/08/11 8:23 AM
PLOT DATE: 2017/08/11 11:08:55 AM BY: LAURA

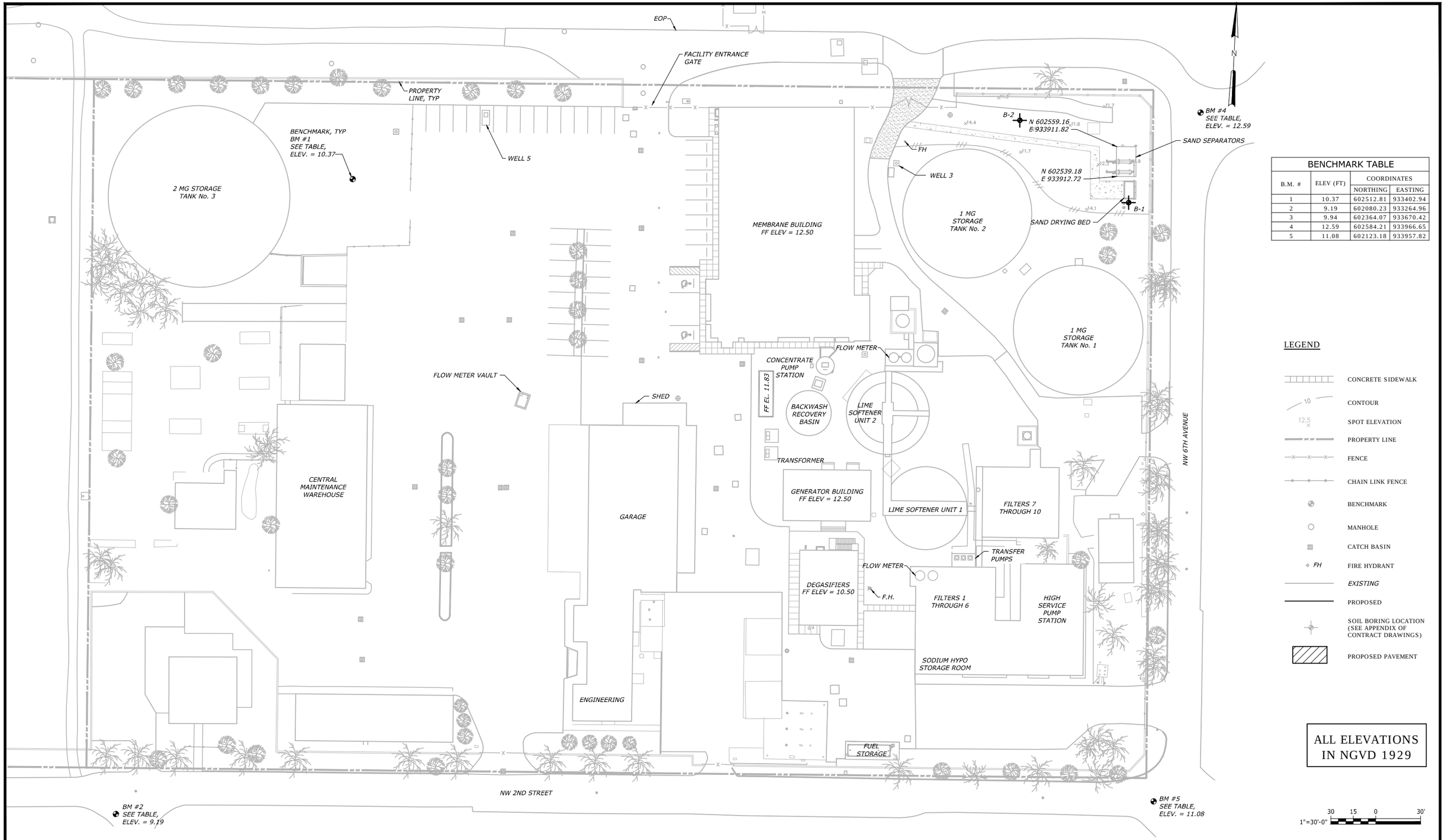

BENCHMARK TABLE

B.M. #	ELEV (FT)	COORDINATES	
		NORTHING	EASTING
1	10.37	602512.81	933402.94
2	9.19	602080.23	933264.96
3	9.94	602364.07	933670.42
4	12.59	602584.21	933966.65
5	11.08	602123.18	933957.82

LEGEND

- CONCRETE SIDEWALK
- CONTOUR (10)
- SPOT ELEVATION (12.5)
- PROPERTY LINE
- FENCE
- CHAIN LINK FENCE
- BENCHMARK
- MANHOLE
- CATCH BASIN
- FH — FIRE HYDRANT
- EXISTING
- PROPOSED
- SOIL BORING LOCATION (SEE APPENDIX OF CONTRACT DRAWINGS)
- PROPOSED PAVEMENT

ALL ELEVATIONS IN NGVD 1929

REV	ISSUED FOR	DATE	BY

PROJECT ENGINEER: -
DESIGNED BY: G.A.B.
DRAWN BY: G.B.
CHECKED BY:
IF THIS BAR DOES NOT MEASURE 1" THEN DRAWING IS NOT TO FULL SCALE 0 1/2" 1"

GEORGE A. BROWN, PE No. 56076

Hazen

HAZEN AND SAWYER
4000 HOLLYWOOD BOULEVARD, SUITE 750N
HOLLYWOOD, FLORIDA 33021
CERTIFICATE OF AUTHORIZATION NO. : 2771

CITY OF HALLANDALE BEACH

WATER TREATMENT PLANT
HIGH SERVICE PUMP REPLACEMENT

Hallandale Beach
PROGRESS. INNOVATION. OPPORTUNITY.

EXISTING SITE PLAN

DATE: SEPTEMBER 2017
HAZEN NO.: 40621-000
CONTRACT NO.: 1
DRAWING NUMBER: C-01

50% SUBMITTAL

File: H:\40621-000 HALLANDALE HIGH SERVICE PUMPS\DRAWINGS\CIVIL\C-01 Saved By LAURA Save Date: 2017/08/09 3:03 PM
PLOT DATE: 2017/08/11 11:06:04 AM BY: LAURA

NOTES:

1. PARKING FOR CONTRACTOR'S VEHICLES IS LIMITED TO STAGING AREA SHOWN.
2. CONTRACTOR TO ENSURE THAT PLANT ACCESS ROADWAY IS KEPT OPEN. OBTAIN PRIOR WRITTEN APPROVAL BY THE CITY BEFORE RESTRICTING OR BLOCKING ACCESS.
3. CONTRACTOR SHALL REFER TO SPECIFICATION 01550 FOR ADDITIONAL REQUIREMENTS REGARDING SITE ACCESS AND STORAGE.
4. CONTRACTOR SHALL REFER TO SPECIFICATION 01510 FOR TEMPORARY UTILITIES AND SERVICES DURING CONSTRUCTION.

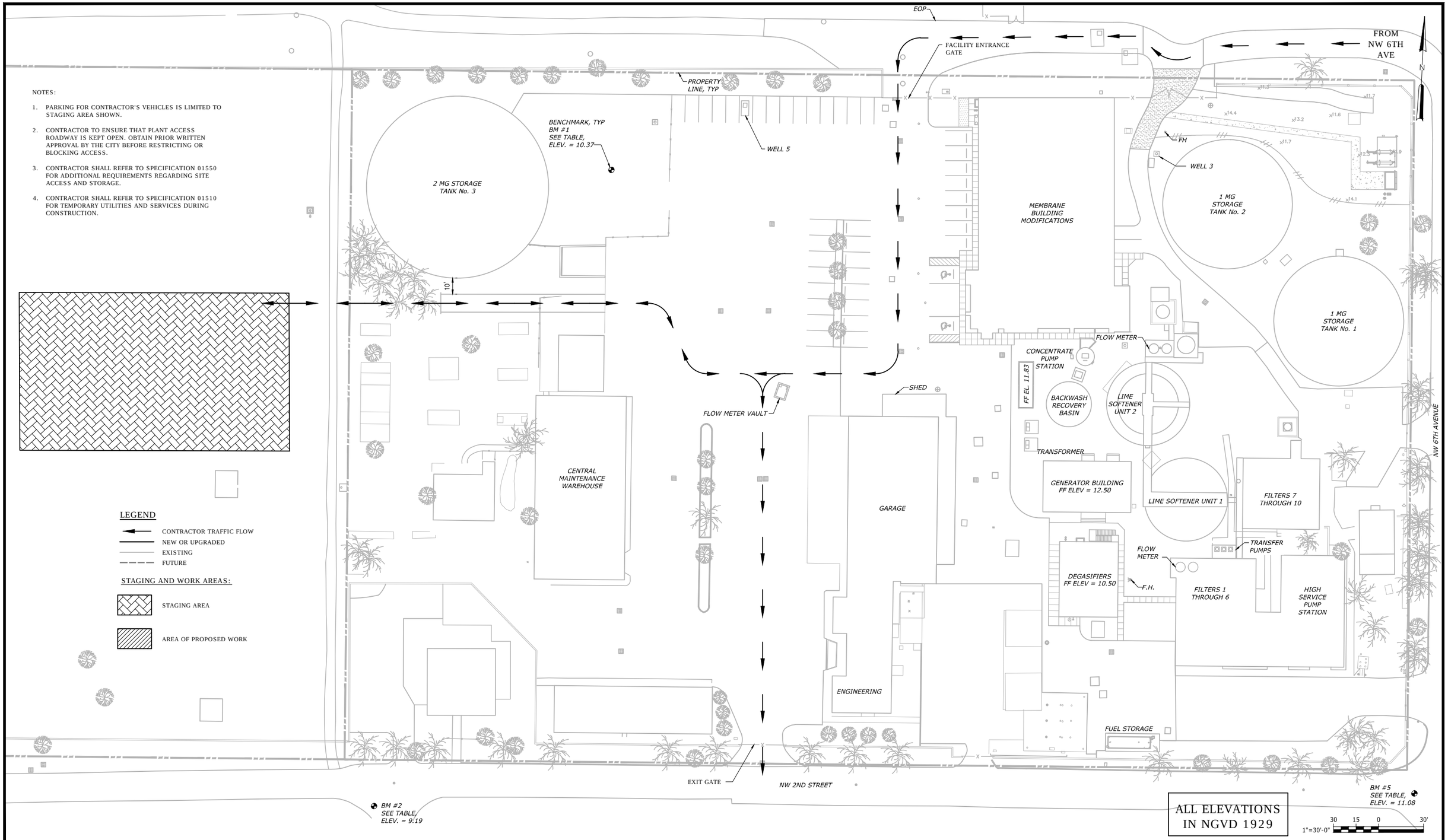

LEGEND

- CONTRACTOR TRAFFIC FLOW
- NEW OR UPGRADED
- EXISTING
- FUTURE

STAGING AND WORK AREAS:

- STAGING AREA
- AREA OF PROPOSED WORK

REV	ISSUED FOR	DATE	BY

PROJECT ENGINEER: -
DESIGNED BY: G.A.B.
DRAWN BY: G.B.
CHECKED BY:
IF THIS BAR DOES NOT MEASURE 1" THEN DRAWING IS NOT TO FULL SCALE 0 1/2" 1"

GEORGE A. BROWN, PE NO. 56076

Hazen

HAZEN AND SAWYER
4000 HOLLYWOOD BOULEVARD, SUITE 750N
HOLLYWOOD, FLORIDA 33021
CERTIFICATE OF AUTHORIZATION NO. : 2771

CITY OF HALLANDALE BEACH

WATER TREATMENT PLANT
HIGH SERVICE PUMP REPLACEMENT

Hallandale Beach
PROGRESS. INNOVATION. OPPORTUNITY

STAGING PLAN

DATE: SEPTEMBER 2017
HAZEN NO.: 40621-000
CONTRACT NO.: 1
DRAWING NUMBER: C-02

50% SUBMITTAL

File: H:\40621-000 HALLANDALE HIGH SERVICE PUMPS\DRAWINGS\Grid\C-02 Saved By: LAURA Save Date: 2017/08/09 3:04 PM
PLOT DATE: 2017/09/11 11:06:17 AM BY: LAURA

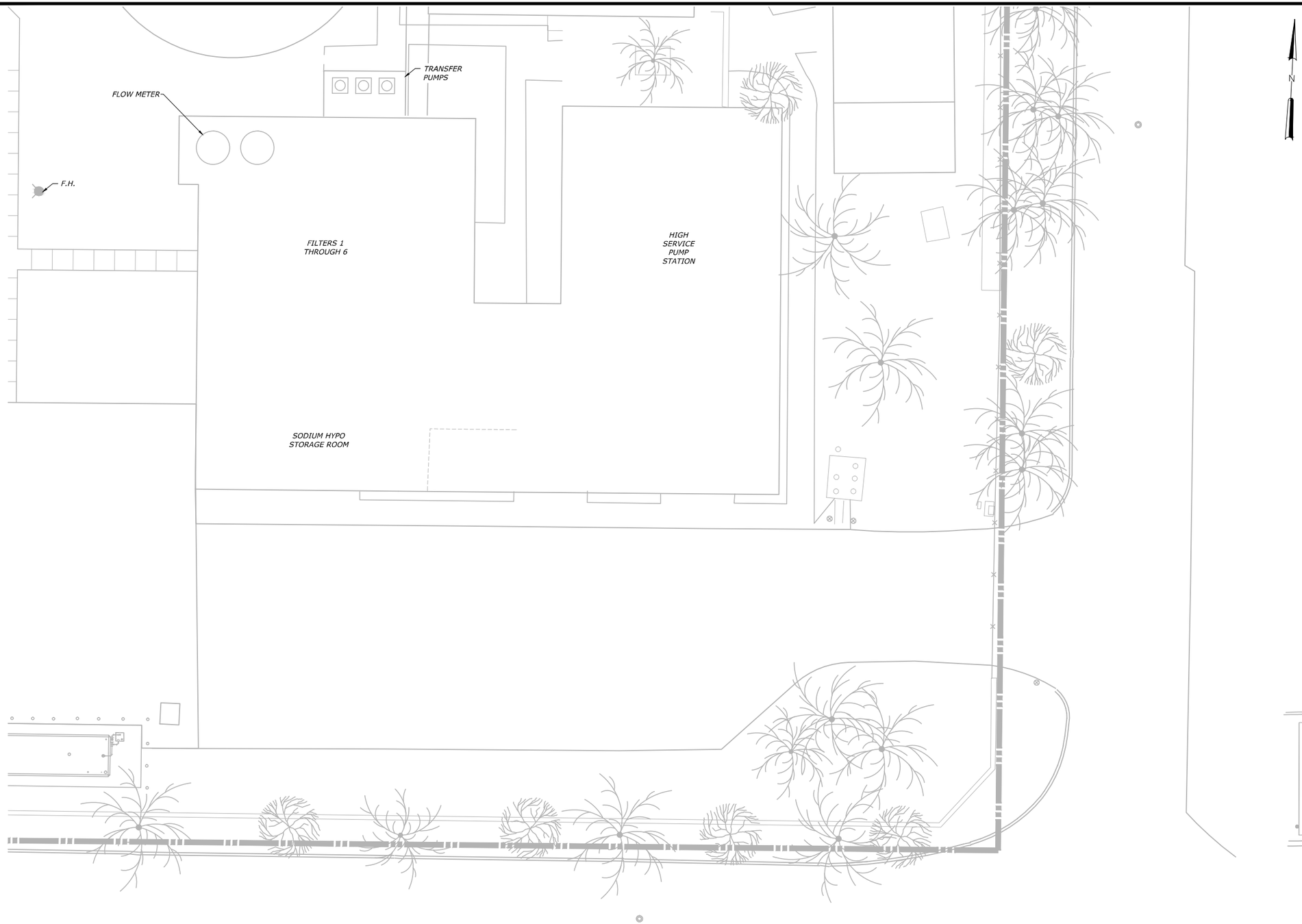

ALL ELEVATIONS IN NGVD 1929

LEGEND:

EXISTING

PROPOSED

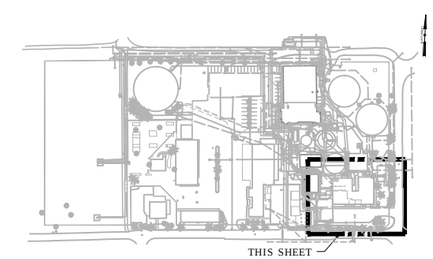

KEY MAP

1"=10'-0" 10 5 0 10'

REV	ISSUED FOR	DATE	BY

PROJECT ENGINEER: -

DESIGNED BY: G.A.B.

DRAWN BY: G.B.

CHECKED BY:

IF THIS BAR DOES NOT MEASURE 1" THEN DRAWING IS NOT TO FULL SCALE 0 1/2" 1"

GEORGE A. BROWN, PE NO. 56076

Hazen

HAZEN AND SAWYER
4000 HOLLYWOOD BOULEVARD, SUITE 750N
HOLLYWOOD, FLORIDA 33021
CERTIFICATE OF AUTHORIZATION NO. : 2771

CITY OF HALLANDALE BEACH

WATER TREATMENT PLANT
HIGH SERVICE PUMP REPLACEMENT

Hallandale Beach
PROGRESS. INNOVATION. OPPORTUNITY

PROPOSED SITE PLAN

DATE: SEPTEMBER 2017

HAZEN NO.: 40621-000

CONTRACT NO.: 1

DRAWING NUMBER: C-03

50% SUBMITTAL

File: H:\40621-000 HALLANDALE HIGH SERVICE PUMPS\DRAWINGS\CIVIL\C-03 Saved By LAURA Save Date: 2017/09/11 10:30 AM
PLOT DATE: 2017/09/11 11:09:43 AM BY: LAURA

1 MG STORAGE TANK No. 1

1 MG STORAGE TANK No. 2

EXISTING TANK LEVEL TRANSMITTER TO BE REMOVED AND REPLACED

SEE DRAWING C-05

WELL 3 AND 8" RW

FH

FLOW METER

WELL 2

LIME SOFTENER UNIT 2

LIME SOFTENER UNIT 1

FILTERS 7 THROUGH 10

HIGH SERVICE PUMP STATION

UTILITY TRANSFORMER VAULT

SODIUM HYPO PUMP ROOM

TRANSFER PUMPS

FILTERS 1 THROUGH 6

FLOW METER

FUEL STORAGE

GENERATOR BUILDING

DEGASIFIERS

BACKWASH RECOVERY BASIN

TRANSFORMER

EXIST CONCENTRATE PUMP STATION

MEMBRANE BUILDING

6 SS

GARAGE

N

KNOW WHAT'S BELOW ALWAYS CALL 811 BEFORE YOU DIG

It's fast. It's free. It's the law.

www.callsunshine.com

ALL ELEVATIONS IN NGVD 1929

LEGEND:

EXISTING

PROPOSED

THIS SHEET

KEY MAP

20 10 0 20'

1"=20'-0"

REV	ISSUED FOR	DATE	BY

PROJECT ENGINEER: -

DESIGNED BY: G.A.B.

DRAWN BY: G.B.

CHECKED BY:

IF THIS BAR DOES NOT MEASURE 1" THEN DRAWING IS NOT TO FULL SCALE 0 1/2" 1"

GEORGE A. BROWN, PE NO. 56076

Hazen

HAZEN AND SAWYER
4000 HOLLYWOOD BOULEVARD, SUITE 750N
HOLLYWOOD, FLORIDA 33021
CERTIFICATE OF AUTHORIZATION NO. : 2771

CITY OF HALLANDALE BEACH

WATER TREATMENT PLANT
HIGH SERVICE PUMP REPLACEMENT

Hallandale Beach
PROGRESS. INNOVATION. OPPORTUNITY.

YARD PIPING KEY MAP

DATE: SEPTEMBER 2017

HAZEN NO.: 40621-000

CONTRACT NO.: 1

DRAWING NUMBER: C-04

50% SUBMITTAL

File: H:\40621-000 HALLANDALE HIGH SERVICE PUMPS\DRAWINGS\Old\C-04 Saved By LAURA Save Date: 2017/08/09 2:47 PM
PLOT DATE: 2017/09/11 11:09:58 AM BY: LAURA

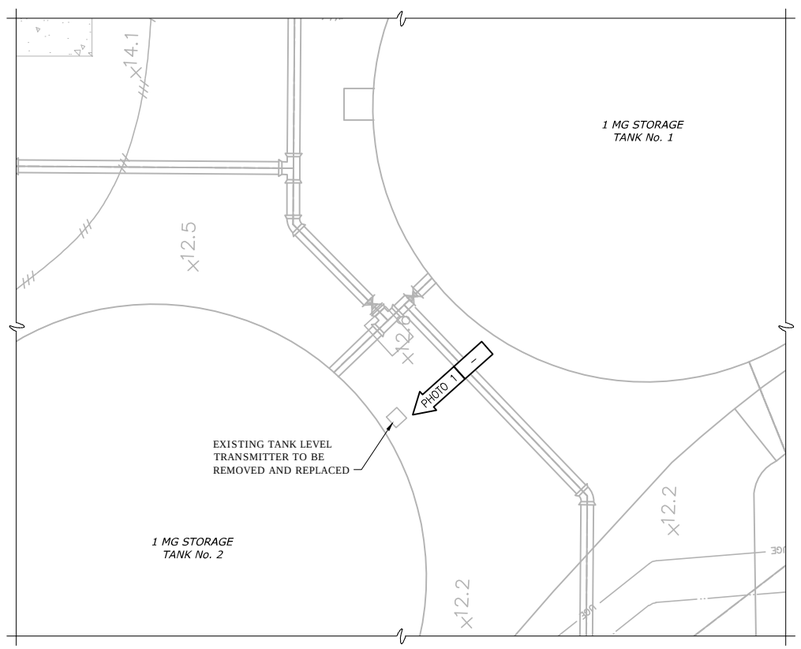

PLAN
1" = 1'-0"

STORAGE TANK LEVEL TRANSMITTER
PHOTO 1
NTS

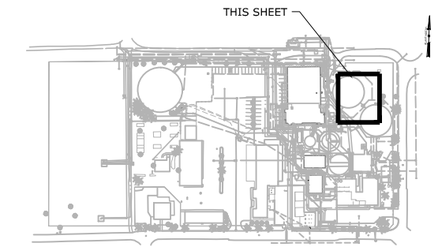

KEY MAP

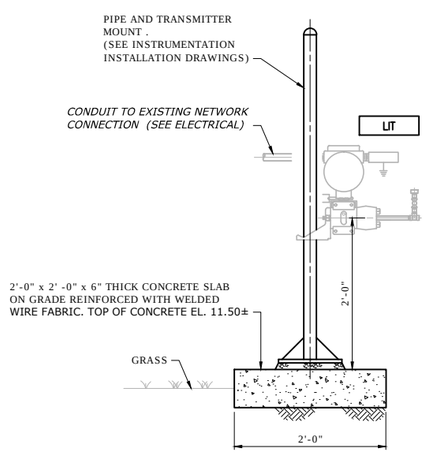

DETAIL 1
NTS -

KNOW WHAT'S BELOW
ALWAYS CALL 811
BEFORE YOU DIG
It's fast. It's free. It's the law.
www.callsunshine.com

ALL ELEVATIONS
IN NGVD 1929

LEGEND:

EXISTING

PROPOSED

DWG PHOTO # — ARROW SHOWS APPROXIMATE LOCATION AND DIRECTION OF PHOTOGRAPH

1"=1'-0" 12" 6 0 1'

REV	ISSUED FOR	DATE	BY

PROJECT ENGINEER: -
DESIGNED BY: G.A.B.
DRAWN BY: G.B.
CHECKED BY:
IF THIS BAR DOES NOT MEASURE 1" THEN DRAWING IS NOT TO FULL SCALE 0 1/2" 1"

GEORGE A. BROWN, PE NO. 56076

Hazen
HAZEN AND SAWYER
4000 HOLLYWOOD BOULEVARD, SUITE 750N
HOLLYWOOD, FLORIDA 33021
CERTIFICATE OF AUTHORIZATION NO. : 2771

CITY OF HALLANDALE BEACH

WATER TREATMENT PLANT
HIGH SERVICE PUMP REPLACEMENT

Hallandale Beach
PROSPERITY. INNOVATION. OPPORTUNITY

TANK LEVEL TRANSMITTER
REPLACEMENT

DATE: SEPTEMBER 2017
HAZEN NO.: 40621-000
CONTRACT NO.: 1
DRAWING NUMBER: C-05

50% SUBMITTAL

File: H:\40621-000 HALLANDALE HIGH SERVICE PUMPS\DRAWINGS\CIVIL\C-05 Saved By LAURA Save Date: 2017/08/11 10:56 AM
PLOT DATE: 2017/08/11 11:10:09 AM BY: LAURA

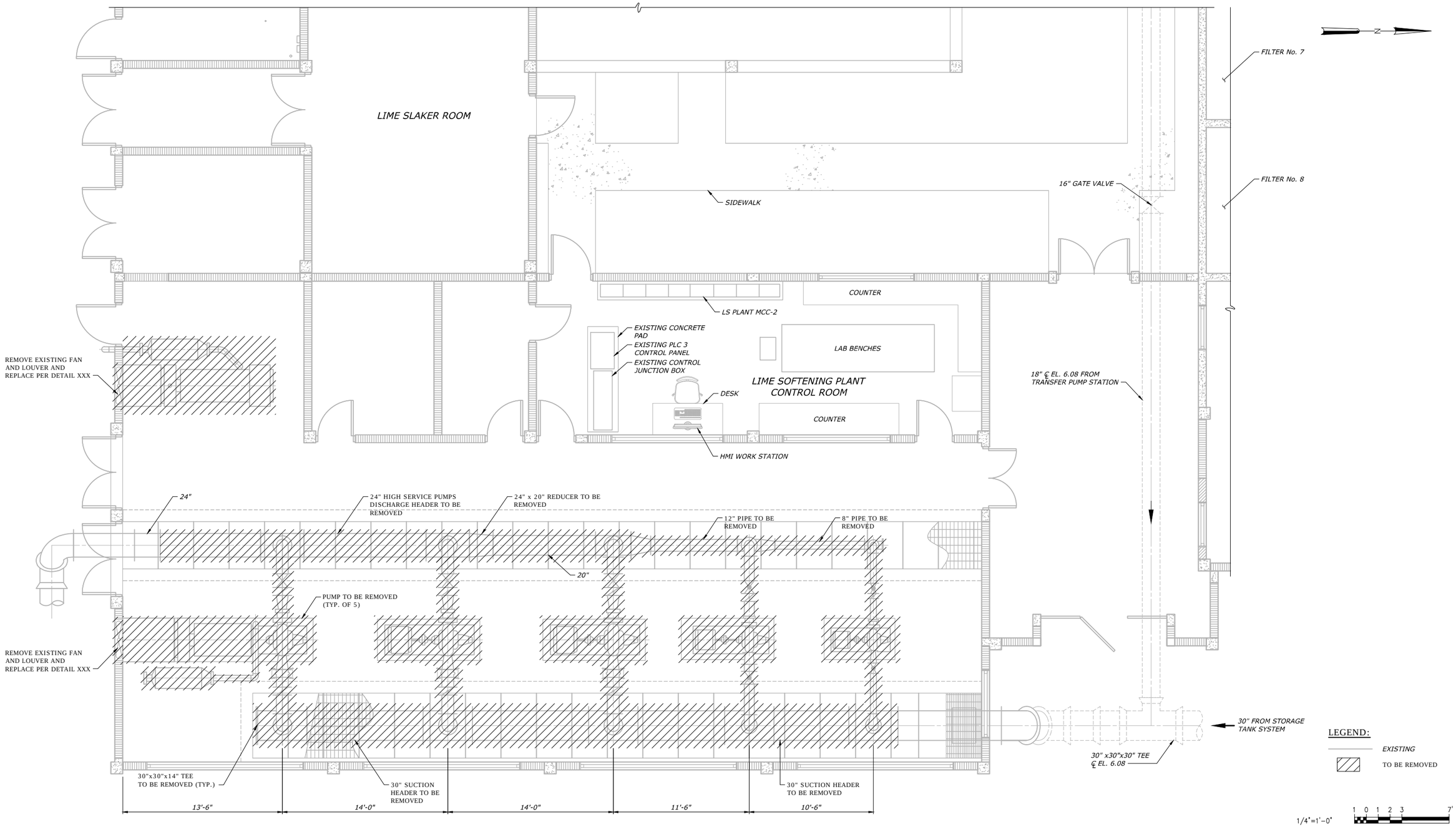

REV	ISSUED FOR	DATE	BY

PROJECT ENGINEER: -

DESIGNED BY: G.A.B.

DRAWN BY: G.B.

CHECKED BY:

IF THIS BAR DOES NOT MEASURE 1" THEN DRAWING IS NOT TO FULL SCALE 0 1/2" 1"

GEORGE A. BROWN, PE NO. 56076

Hazen

HAZEN AND SAWYER
4000 HOLLYWOOD BOULEVARD, SUITE 750N
HOLLYWOOD, FLORIDA 33021
CERTIFICATE OF AUTHORIZATION NO. : 2771

CITY OF HALLANDALE BEACH

WATER TREATMENT PLANT
HIGH SERVICE PUMP REPLACEMENT

Hallandale Beach
PROSPERITY. INNOVATION. OPPORTUNITY.

HIGH SERVICE PUMPS
DEMOLITION PLAN

DATE: SEPTEMBER 2017

HAZEN NO.: 40621-000

CONTRACT N0.: 1

DRAWING NUMBER: M-01

50% SUBMITTAL

File: H:\40621-000 HALLANDALE HIGH SERVICE PUMPS\DRAWINGS\MECH\M-01 Saved By LAURA Save Date: 2017/08/11 11:04 AM
PLOT DATE: 2017/08/11 11:10:18 AM BY: LAURA

PUMP ROOM - DEMO PHOTO 1
NTS

PUMP ROOM - DEMO PHOTO 2
NTS

PUMP ROOM - DEMO PHOTO 3
NTS

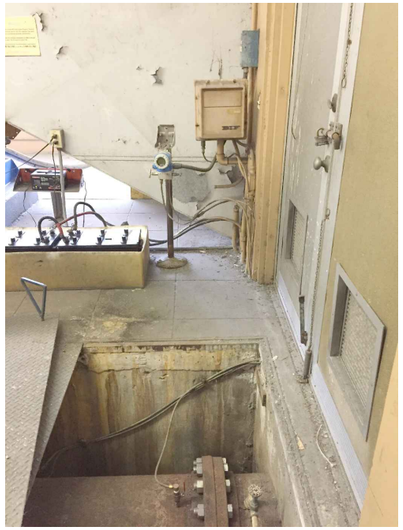

PUMP ROOM - DEMO PHOTO 4
NTS

PUMP ROOM - DEMO PHOTO 5
NTS

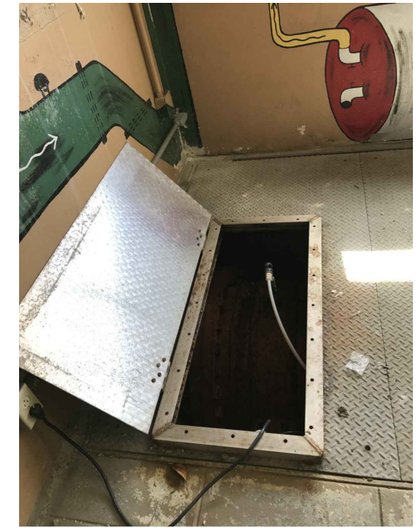

PUMP ROOM - DEMO PHOTO 6
NTS

REV	ISSUED FOR	DATE	BY

PROJECT ENGINEER:	-
DESIGNED BY:	F.A.M.
DRAWN BY:	G.K.
CHECKED BY:	
IF THIS BAR DOES NOT MEASURE 1" THEN DRAWING IS NOT TO FULL SCALE	0 1/2" 1"

GEORGE A. BROWN, PE NO. 56076

Hazen
HAZEN AND SAWYER
4000 HOLLYWOOD BOULEVARD, SUITE 750N
HOLLYWOOD, FLORIDA 33021
CERTIFICATE OF AUTHORIZATION NO. : 2771

CITY OF HALLANDALE BEACH

WATER TREATMENT PLANT
HIGH SERVICE PUMP REPLACEMENT

Hallandale Beach
PROGRESS. INNOVATION. OPPORTUNITY

HIGH SERVICE PUMPS
DEMOLITION PHOTOS
SHEET 1

DATE:	SEPTEMBER 2017
HAZEN NO.:	40621-000
CONTRACT N0.:	1
DRAWING NUMBER:	M-02

50% SUBMITTAL

File: H:\40621-000 HALLANDALE HIGH SERVICE PUMPS\DRAWINGS\MECH\M-02 Saved By: LAURA Save Date: 2017/09/10 11:59 AM
PLOT DATE: 2017/09/11 11:10:30 AM BY: LAURA

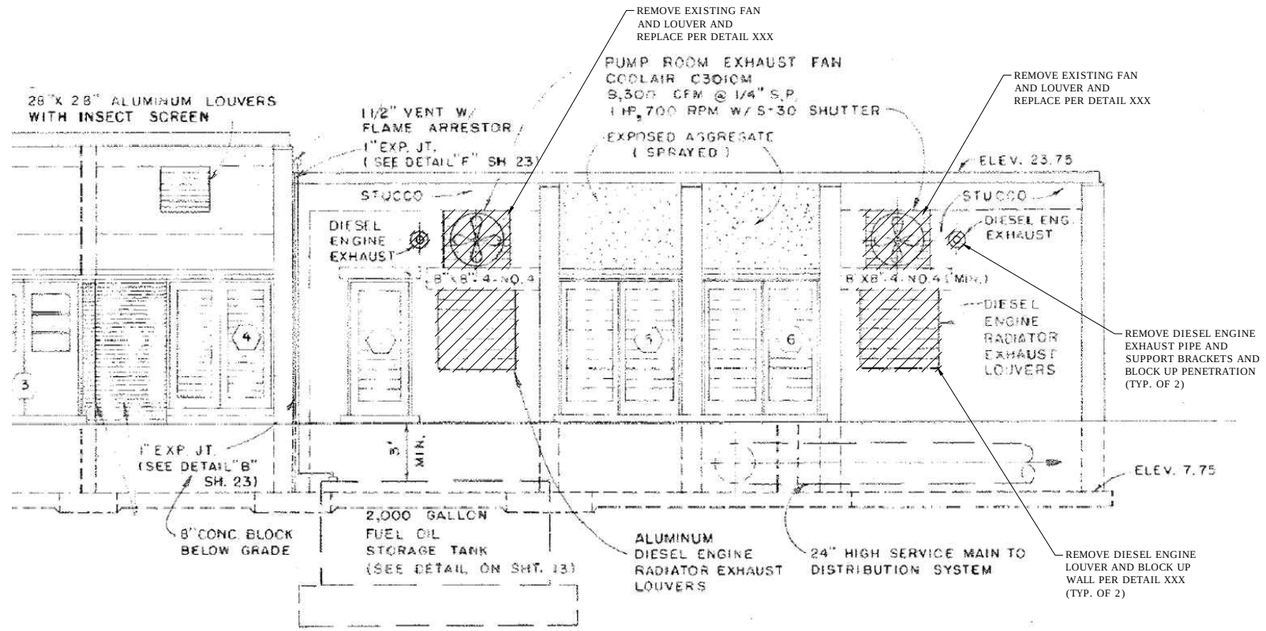

SOUTH ELEVATION

NTS

PUMP ROOM - DEMO PHOTO 7

NTS

HIGH SERVICE PUMP - DEMO PHOTO 8

NTS

LEGEND:

TO BE REMOVED

REV	ISSUED FOR	DATE	BY

PROJECT ENGINEER: -

DESIGNED BY: F.A.M.

DRAWN BY: G.K.

CHECKED BY:

IF THIS BAR DOES NOT MEASURE 1" THEN DRAWING IS NOT TO FULL SCALE 0 1/2" 1"

GEORGE A. BROWN, PE NO. 56076

Hazen

HAZEN AND SAWYER
4000 HOLLYWOOD BOULEVARD, SUITE 750N
HOLLYWOOD, FLORIDA 33021
CERTIFICATE OF AUTHORIZATION NO. : 2771

CITY OF HALLANDALE BEACH

WATER TREATMENT PLANT
HIGH SERVICE PUMP REPLACEMENT

Hallandale Beach
PROGRESS. INNOVATION. OPPORTUNITY

HIGH SERVICE PUMPS
DEMOLITION PHOTOS
SHEET 2

DATE: SEPTEMBER 2017

HAZEN NO.: 40621-000

CONTRACT N0.: 1

DRAWING NUMBER: M-03

50% SUBMITTAL

File: H:\40621-000 HALLANDALE HIGH SERVICE PUMPS\DRAWINGS\MECH\M-03 Saved By: LAURA Save Date: 2017/08/10 2:43 PM
PLOT DATE: 2017/08/11 11:15:39 AM BY: LAURA

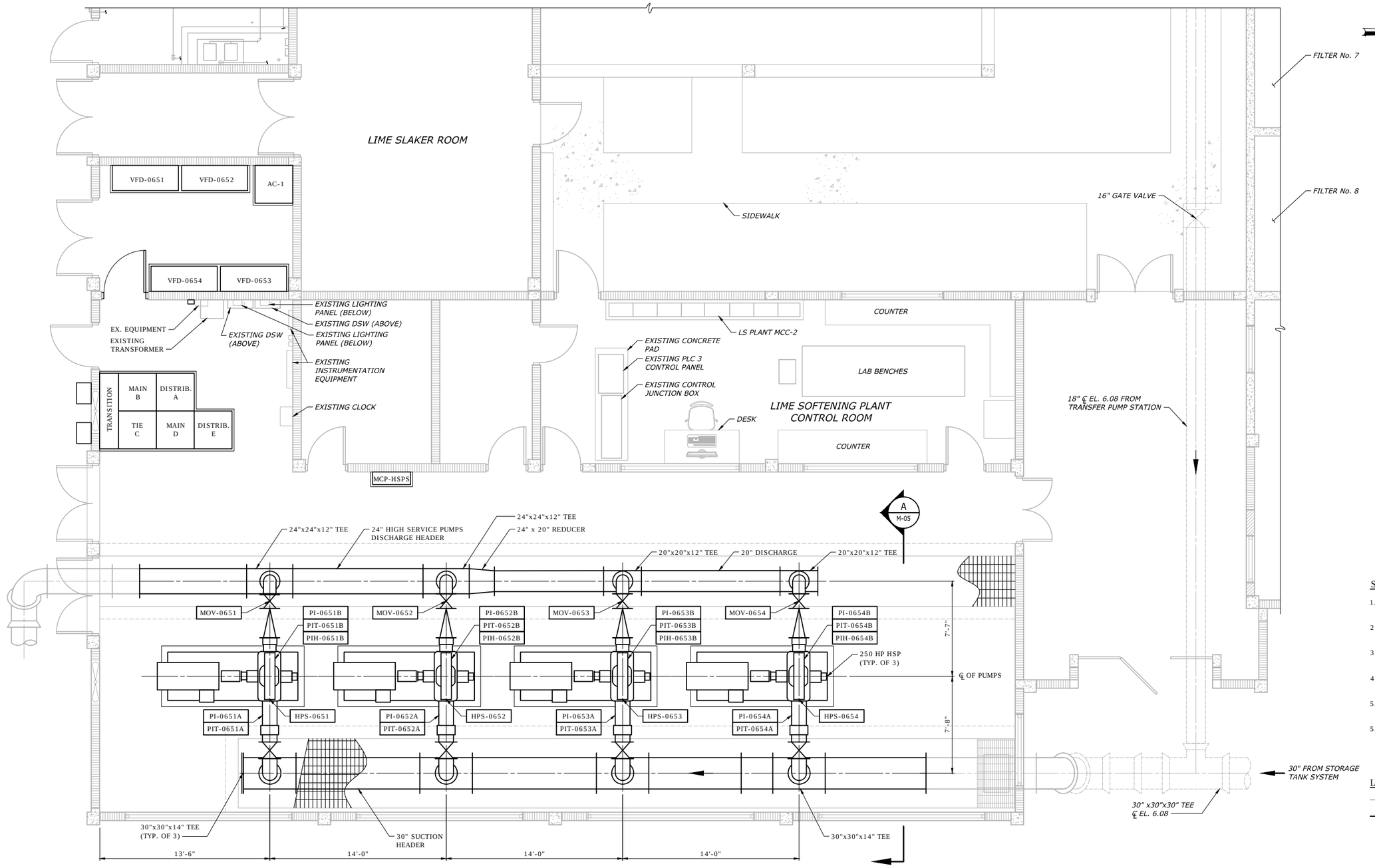

SCOPE OF WORK AT HSPS BUILDING:

1. THREE NEW HIGH SERVICE PUMPS AND PIPING REPLACEMENT.
2. REPLACEMENT OF EXISTING GRATING WITH NEW GRATING AT PIPE TRENCHES.
3. NEW ELECTRICAL AND CONTROLS FOR THREE NEW HIGH SERVICE PUMPS.
4. CONSTRUCTION OF NEW PARTITION WALL AT ELECTRICAL ROOM.
5. INSTALLATION OF NEW DOOR AT ELECTRICAL ROOM.
5. INSTALLATION OF A NEW AIR CONDITIONING SYSTEM AT ELECTRICAL ROOM.

LEGEND:

EXISTING

PROPOSED

1/4"=1'-0" 1 0 1 2 3 7'

REV	ISSUED FOR	DATE	BY

PROJECT ENGINEER: -
DESIGNED BY: G.A.B.
DRAWN BY: G.B.
CHECKED BY:
IF THIS BAR DOES NOT MEASURE 1" THEN DRAWING IS NOT TO FULL SCALE 0 1/2" 1"

GEORGE A. BROWN, PE NO. 56076

Hazen

HAZEN AND SAWYER
4000 HOLLYWOOD BOULEVARD, SUITE 750N
HOLLYWOOD, FLORIDA 33021
CERTIFICATE OF AUTHORIZATION NO. : 2771

CITY OF HALLANDALE BEACH

WATER TREATMENT PLANT
HIGH SERVICE PUMP REPLACEMENT

Hallandale Beach
PROGRESS, INNOVATION, OPPORTUNITY

HIGH SERVICE PUMPS
PROPOSED PLAN

DATE: SEPTEMBER 2017
HAZEN NO.: 40621-000
CONTRACT NO.: 1
DRAWING NUMBER: M-04

50% SUBMITTAL

File: H:\40621-000 HALLANDALE HIGH SERVICE PUMPS\DRAWINGS\MECH\M-04 Saved By LAURA Save Date: 2017/08/11 11:21 AM
PLOT DATE: 2017/08/11 11:22:33 AM BY: LAURA

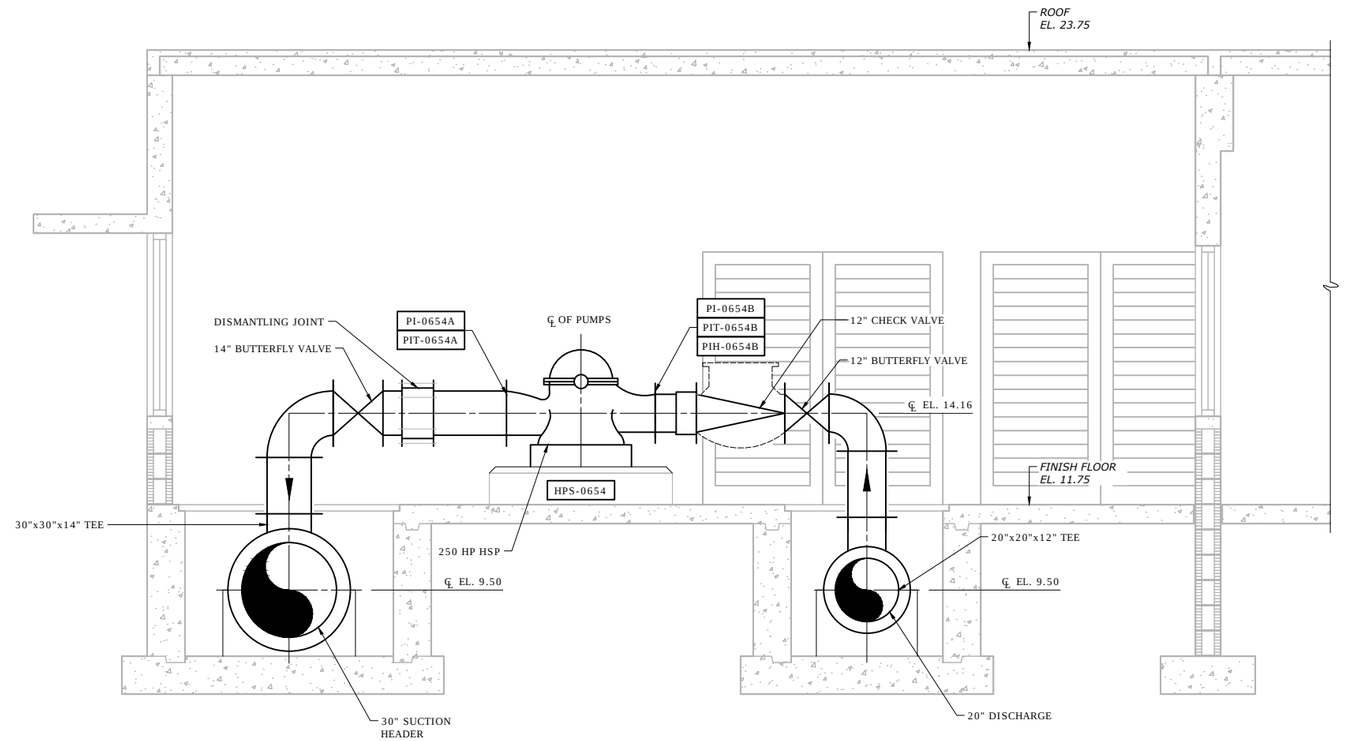

SECTION A / M-04
1/2" = 1'-0"

1/2"=1'-0" 12" 0 1 3'

REV	ISSUED FOR	DATE	BY

PROJECT ENGINEER: -
DESIGNED BY: F.A.M.
DRAWN BY: G.K.
CHECKED BY:
IF THIS BAR DOES NOT MEASURE 1" THEN DRAWING IS NOT TO FULL SCALE 0 1/2" 1"

GEORGE A. BROWN, PE NO. 56076

Hazen

HAZEN AND SAWYER
4000 HOLLYWOOD BOULEVARD, SUITE 750N
HOLLYWOOD, FLORIDA 33021
CERTIFICATE OF AUTHORIZATION NO. : 2771

CITY OF HALLANDALE BEACH

WATER TREATMENT PLANT
HIGH SERVICE PUMP REPLACEMENT

Hallandale Beach
PROGRESS. INNOVATION. OPPORTUNITY

HIGH SERVICE PUMPS
SECTION

DATE: SEPTEMBER 2017
HAZEN NO.: 40621-000
CONTRACT N0.: 1
DRAWING NUMBER: M-05

50% SUBMITTAL

File: H:\40621-000 HALLANDALE HIGH SERVICE PUMPS\DRAWINGS\MECH\M-05 Saved By CALL3 Save Date: 2017/08/11 9:52 AM
PLOT DATE: 2017/08/11 11:10:59 AM BY: LAURA

File: H:\40621-000 HALLANDALE HIGH SERVICE PUMPS\DRAWINGS\MECH\M-06 Saved By: LAURA Save Date: 2017/09/11 10:20 AM
PLOT DATE: 2017/09/11 11:11:05 AM BY: LAURA

REV	ISSUED FOR	DATE	BY

PROJECT ENGINEER:	-
DESIGNED BY:	F.A.M.
DRAWN BY:	G.K.
CHECKED BY:	
IF THIS BAR DOES NOT MEASURE 1" THEN DRAWING IS NOT TO FULL SCALE	0 1/2" 1"

GEORGE A. BROWN, PE NO. 56076

Hazen

HAZEN AND SAWYER
4000 HOLLYWOOD BOULEVARD, SUITE 750N
HOLLYWOOD, FLORIDA 33021
CERTIFICATE OF AUTHORIZATION NO. : 2771

CITY OF HALLANDALE BEACH

WATER TREATMENT PLANT
HIGH SERVICE PUMP REPLACEMENT

Hallandale Beach
PROGRESS, INNOVATION, OPPORTUNITY

XX

DATE:	SEPTEMBER 2017
HAZEN NO.:	40621-000
CONTRACT N0.:	1
DRAWING NUMBER:	M-06

50% SUBMITTAL

File: H:\40621-000 HALLANDALE HIGH SERVICE PUMPS\DRAWINGS\MECH\M-07 Saved By LAURA Save Date: 2017/09/11 10:19 AM
PLOT DATE: 2017/09/11 11:11:12 AM BY: LAURA

REV	ISSUED FOR	DATE	BY

PROJECT ENGINEER:	-
DESIGNED BY:	F.A.M.
DRAWN BY:	G.K.
CHECKED BY:	
IF THIS BAR DOES NOT MEASURE 1" THEN DRAWING IS NOT TO FULL SCALE	0 1/2" 1"

GEORGE A. BROWN, PE NO. 56076

Hazen

HAZEN AND SAWYER
4000 HOLLYWOOD BOULEVARD, SUITE 750N
HOLLYWOOD, FLORIDA 33021
CERTIFICATE OF AUTHORIZATION NO. : 2771

CITY OF HALLANDALE BEACH

WATER TREATMENT PLANT
HIGH SERVICE PUMP REPLACEMENT

Hallandale Beach
PROSPERITY, INNOVATION, OPPORTUNITY

XX

DATE:	SEPTEMBER 2017
HAZEN NO.:	40621-000
CONTRACT N0.:	1
DRAWING NUMBER:	M-07

50% SUBMITTAL

File: H:\40621-000 HALLANDALE HIGH SERVICE PUMPS\DRAWINGS\MECH\M-08 Saved By LAURA Save Date: 2017/09/11 10:19 AM
PLOT DATE: 2017/09/11 11:11:19 AM BY: LAURA

REV	ISSUED FOR	DATE	BY

PROJECT ENGINEER:	-
DESIGNED BY:	F.A.M.
DRAWN BY:	G.K.
CHECKED BY:	
IF THIS BAR DOES NOT MEASURE 1" THEN DRAWING IS NOT TO FULL SCALE	0 1/2" 1"

GEORGE A. BROWN, PE NO. 56076

Hazen

HAZEN AND SAWYER
4000 HOLLYWOOD BOULEVARD, SUITE 750N
HOLLYWOOD, FLORIDA 33021
CERTIFICATE OF AUTHORIZATION NO. : 2771

CITY OF HALLANDALE BEACH

WATER TREATMENT PLANT
HIGH SERVICE PUMP REPLACEMENT

Hallandale Beach
PROGRESS. INNOVATION. OPPORTUNITY

XX

DATE:	SEPTEMBER 2017
HAZEN NO.:	40621-000
CONTRACT N0.:	1
DRAWING NUMBER:	M-08

50% SUBMITTAL

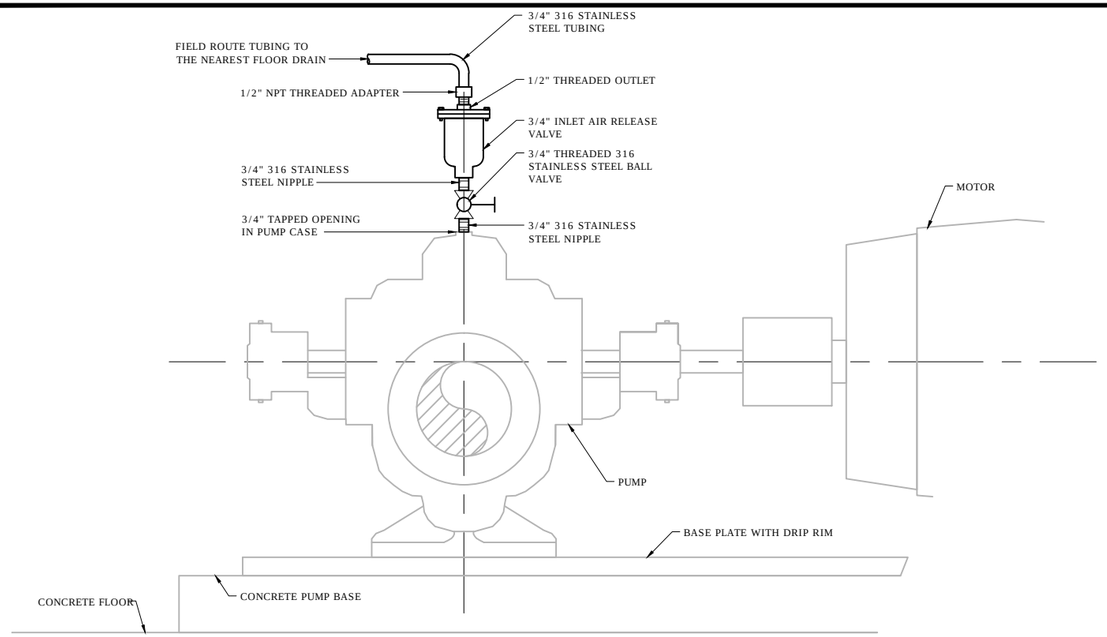

SEAL WATER FLUSING DRAIN

DETAIL 1
NTS -

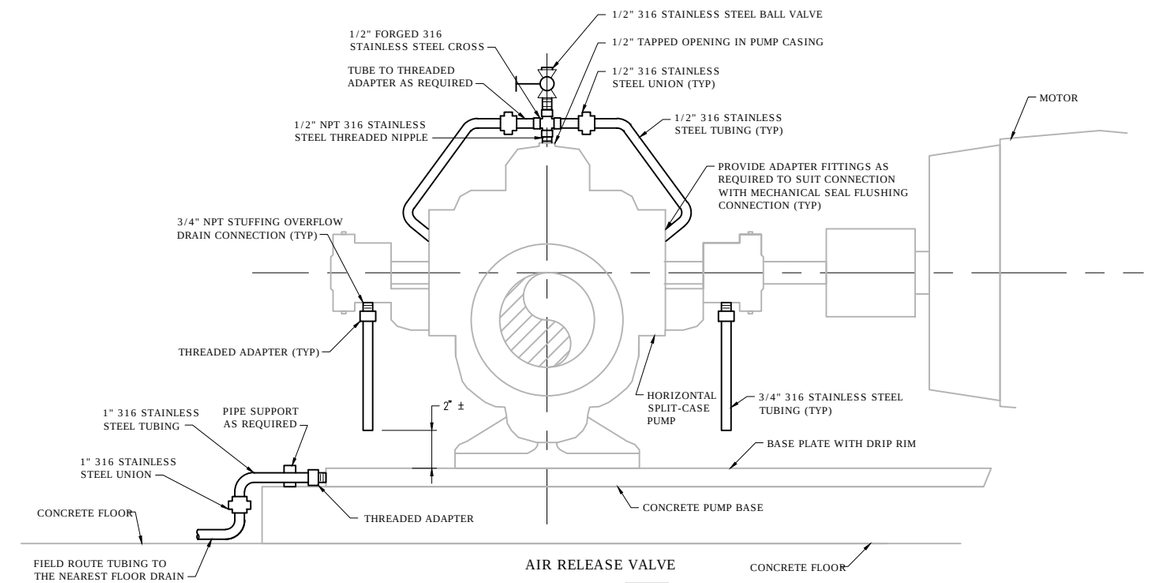

AIR RELEASE VALVE

DETAIL 2
NTS -

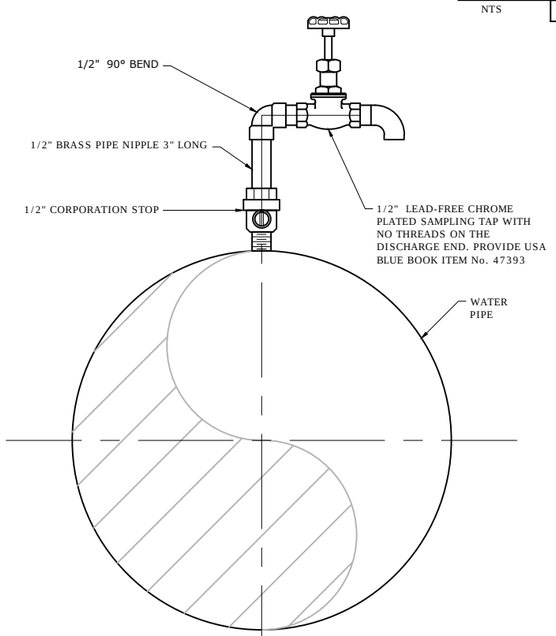

SAMPLE TAP

DETAIL 3
NTS -

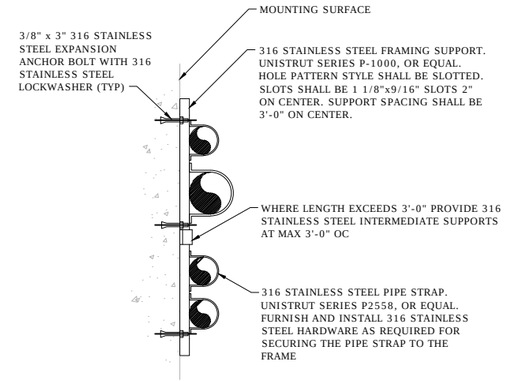

NOTES:

1. THIS DETAIL IS APPLICABLE TO VERTICAL AND HORIZONTAL SURFACES.
2. THIS DETAIL IS APPLICABLE FOR PIPE SIZES 3-INCH DIAMETER AND SMALLER.

FLUSH MOUNTED PIPE SUPPORT

DETAIL 4
NTS -

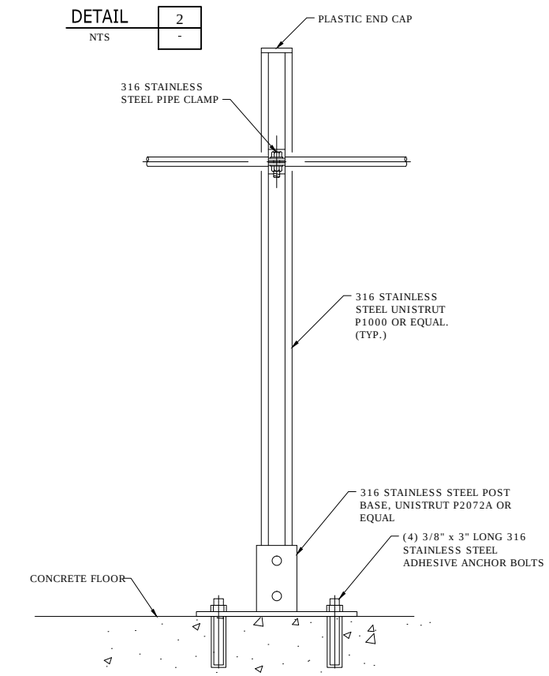

UNISTRUT POST - PIPE SUPPORT

DETAIL 5
NTS -

REV	ISSUED FOR	DATE	BY

PROJECT ENGINEER: -
DESIGNED BY: G.A.B.
DRAWN BY: G.B.
CHECKED BY:
IF THIS BAR DOES NOT MEASURE 1" THEN DRAWING IS NOT TO FULL SCALE 0 1/2" 1"

GEORGE A. BROWN, PE NO. 56076

Hazen
HAZEN AND SAWYER
4000 HOLLYWOOD BOULEVARD, SUITE 750N
HOLLYWOOD, FLORIDA 33021
CERTIFICATE OF AUTHORIZATION NO. : 2771

CITY OF HALLANDALE BEACH

WATER TREATMENT PLANT
HIGH SERVICE PUMP REPLACEMENT

Hallandale Beach
PROSPERITY, INNOVATION, OPPORTUNITY

MECHANICAL DETAILS
SHEET 1

DATE: SEPTEMBER 2017
HAZEN NO.: 40621-000
CONTRACT NO.: 1
DRAWING NUMBER: M-09

50% SUBMITTAL

File: H:\40621-000 HALLANDALE HIGH SERVICE PUMPS\DRAWINGS\MECH\M-09 Saved By LAURA Save Date: 2017/08/11 11:03 AM
PLOT DATE: 2017/08/11 11:11:28 AM BY: LAURA

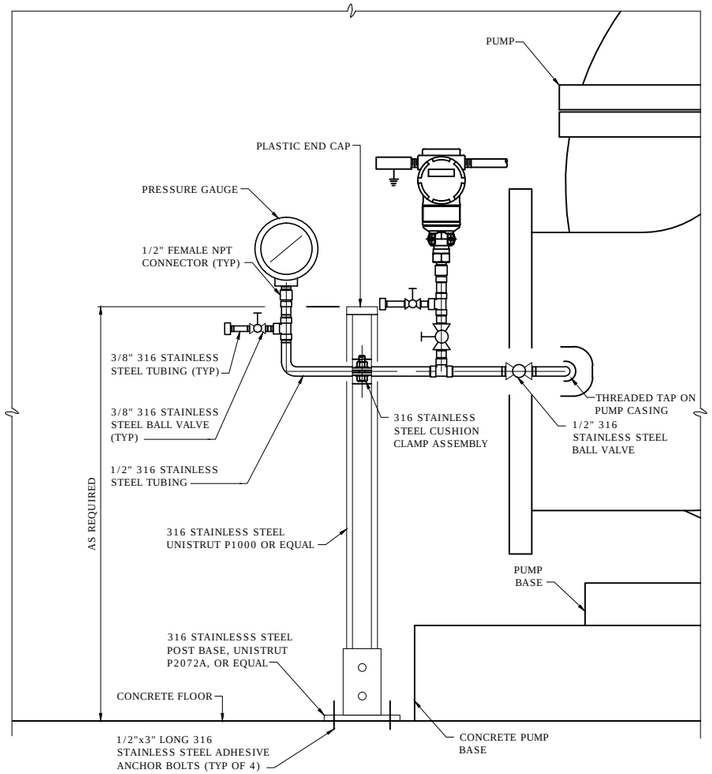

ELEVATION PUMP SUCTION

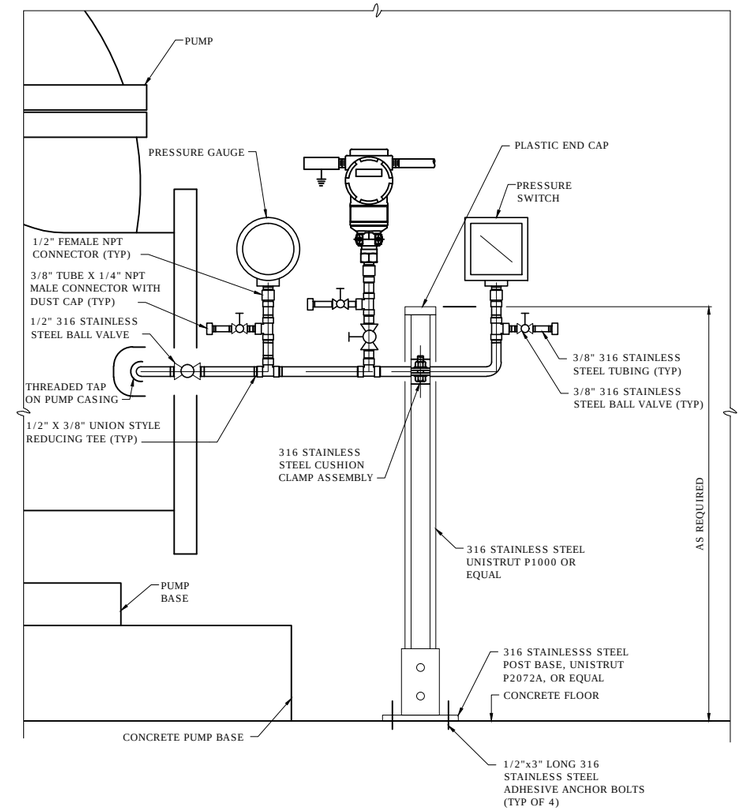

ELEVATION PUMP DISCHARGE

DETAIL	6
NTS	-

REV	ISSUED FOR	DATE	BY

PROJECT ENGINEER:	-
DESIGNED BY:	G.A.B.
DRAWN BY:	G.B.
CHECKED BY:	
IF THIS BAR DOES NOT MEASURE 1" THEN DRAWING IS NOT TO FULL SCALE	0 1/2" 1"

GEORGE A. BROWN, PE NO. 56076

Hazen

HAZEN AND SAWYER
4000 HOLLYWOOD BOULEVARD, SUITE 750N
HOLLYWOOD, FLORIDA 33021
CERTIFICATE OF AUTHORIZATION NO. : 2771

CITY OF HALLANDALE BEACH

WATER TREATMENT PLANT
HIGH SERVICE PUMP REPLACEMENT

Hallandale Beach
PROSPERITY, INNOVATION, OPPORTUNITY

MECHANICAL DETAILS
SHEET 1

DATE:	SEPTEMBER 2017
HAZEN NO.:	40621-000
CONTRACT NO.:	1
DRAWING NUMBER:	M-10

50% SUBMITTAL

File: H:\40621-000 HALLANDALE HIGH SERVICE PUMPS\DRAWINGS\MECH\M-10 Saved By: LAURA Save Date: 2017/09/11 10:59 AM
PLOT DATE: 2017/09/11 11:11:34 AM BY: LAURA

GENERAL STRUCTURAL NOTES

G-1 THESE NOTES ARE GENERAL AND SUPPLEMENT THE SPECIFICATIONS. THESE NOTES APPLY TO THE ENTIRE PROJECT UNLESS MODIFIED OR NOTED OTHERWISE IN THE CONTRACT DOCUMENTS.

G-2 STANDARD DETAILS SHALL BE USED WHEN REFERRED TO OR WHEN NO MORE RESTRICTIVE OR DIFFERENT DETAILS ARE SHOWN ON THE DRAWINGS.

G-3 DESIGN IS IN ACCORDANCE WITH AND CONSTRUCTION SHALL COMPLY WITH THE PROVISIONS OF THE 2014 FLORIDA BUILDING CODE. THE DESIGN LOADS AND OTHER DESIGN VALUES GIVEN IN NOTE G-4 WERE USED FOR DESIGN OF STRUCTURES UNLESS NOTED OTHERWISE ON THE DRAWINGS. SCOPE OF WORK IS CONSIDERED AN ALTERATION LEVEL 2 IN COMPLIANCE WITH THE PRESCRIPTIVE COMPLIANCE METHOD OF THE FLORIDA BUILDING CODE-EXISTING BUILDING.

G-4 LIVE LOADS:

STRUCTURE \ LEVEL	BOTTOM/FIRST FLOOR
HIGH SERVICE PUMP ROOM	300 PSF

-ALL STAIRWAYS, LANDINGS AND PLATFORMS ARE DESIGNED FOR A LIVE LOAD = 100 PSF UNLESS NOTED OTHERWISE.

G-5 ALL DIMENSIONS INDICATED (*) SHALL BE VERIFIED EITHER BY FIELD MEASUREMENTS FOR EXISTING STRUCTURES OR BY SHOP DRAWINGS FOR EQUIPMENT FURNISHED. STRUCTURAL DIMENSIONS NOT SHOWN BUT CONTROLLED BY OR RELATED TO EQUIPMENT SHALL BE VERIFIED BY THE CONTRACTOR WITH THE MANUFACTURER PRIOR TO CONSTRUCTION.

G-6 THE CONTRACTOR IS RESPONSIBLE FOR VERIFYING ALL EXISTING INFORMATION IN THE FIELD AS REQUIRED FOR NEW WORK

G-7 IF A CONFLICT IS FOUND BETWEEN DIFFERENT PORTIONS OF THE CONTRACT DOCUMENTS, THE CONTRACTOR SHALL NOTIFY THE ENGINEER IMMEDIATELY. CONTINUED CONSTRUCTION OF THE AREA IN CONFLICT SHALL BE AT THE CONTRACTOR'S OWN RISK UNTIL THE CONFLICT IS RESOLVED.

G-8 EQUIPMENT ANCHOR BOLT SIZES, TYPES, EMBEDMENT AND PATTERNS SHALL BE VERIFIED WITH THE MANUFACTURER. ALL BOLT PATTERNS SHALL BE TEMPLATED TO INSURE ACCURACY OF PLACEMENT.

G-9 STRUCTURAL DRAWINGS SHALL BE USED IN COORDINATION WITH THE DRAWINGS OF ALL OTHER DISCIPLINES AND MANUFACTURER'S SHOP DRAWINGS.

G-10 STRUCTURES HAVE BEEN DESIGNED FOR OPERATIONAL LOADS ON THE COMPLETED STRUCTURE. DURING CONSTRUCTION, THE STRUCTURES SHALL BE PROTECTED BY BRACING AND TEMPORARY SUPPORTS WHEREVER EXCESSIVE CONSTRUCTION LOADS MAY OCCUR. OVERSTRESSING OF ANY STRUCTURAL ELEMENT IS PROHIBITED.

STRUCTURAL METALS

M-1 DETAIL, FABRICATE, AND ERECT STRUCTURAL STEEL IN ACCORDANCE WITH AISC SPECIFICATION FOR STRUCTURAL STEEL BUILDINGS, AISC 360-05.

M-2 STEEL MATERIAL:
A) STRUCTURAL TUBING: ASTM A500, GRADE B OR A501 (42 KSI)
B) STRUCTURAL PIPE: ASTM A53, TYPE E OR S, GRADE B (35 KSI)
C) PLATES AND BARS: ASTM A36 UNO (36 KSI)
D) STRUCTURAL W SHAPES: ASTM A992 (50 KSI)
E) STRUCTURAL S, M, C,& L SHAPES: ASTM A36 (36 KSI)
F) STRUCTURAL HP SHAPES: ASTM A 572, GRADE 50 (50 KSI)

M-3 PROVIDE MINIMUM 3/4" DIAMETER ASTM A325 HIGH STRENGTH BOLTS WITH FULLY TIGHTENED TYPE N CONNECTIONS FOR STRUCTURAL STEEL UNLESS NOTED OTHERWISE.

M-4 PROVIDE TYPICAL STEEL BEAM CONNECTIONS FOR A CAPACITY OF NOT LESS THAN THE TOTAL UNIFORM LOAD CAPACITY TABULATED IN THE AISC TABLES FOR ALLOWABLE LOADS OF BEAMS UNLESS NOTED OTHERWISE.

M-5 DO NOT PAINT STEEL SURFACES WHICH ARE TO BE WELDED OR ARE TO BE ENCASED IN CONCRETE.

M-6 ALL STAINLESS STEEL FABRICATIONS SHALL BE TYPE 316, UNLESS NOTED OTHERWISE.

M-7 ALUMINUM SHALL BE ALLOY 6061-T6 UNLESS NOTED OTHERWISE.

M-8 ALL BOLTS, ANCHOR BOLTS, AND CONCRETE ANCHORS CONNECTING ALUMINUM SHALL BE TYPE 316 STAINLESS STEEL.

M-9 DETAIL, FABRICATE, AND ERECT ALUMINUM IN ACCORDANCE WITH THE LATEST EDITION OF THE ALUMINUM ASSOCIATION ALUMINUM DESIGN MANUAL.

M-10 ALUMINUM SHALL BE ISOLATED FROM CONTACT WITH CONCRETE AND DISSIMILAR METALS.

M-11 ALL GROOVE AND BUTT WELDS SHALL BE FULL PENETRATION.

M-12 FILLET WELD SIZES SHALL BE THE MINIMUM SIZE REQUIRED BY AISC CODE FOR PLATE SIZES TO BE CONNECTED AND SHALL BE APPLIED TO THE ENTIRE JOINT CONTACT LENGTH, BUT NOT LESS THAN 3/16".

M-13 BOTTOM SURFACES OF BASE PLATES SHALL BE GROUTED TO INSURE FULL BEARING CONTACT WITH CONCRETE SLAB.

M-14 WHENEVER ONE MEMBER IS FASTENED TO ANOTHER WITH FASTENINGS (BOLTS, WELDS, ETC.) SET AT A UNIFORM SPACING, THERE SHALL BE A MINIMUM OF TWO FASTENINGS PER PIECE CONNECTED AND THE FIRST AND LAST FASTENINGS SHALL BE LOCATED NOT TO EXCEED 0.25 OF FASTENER SPACING FROM EACH END.

M-15 BOLTED CONNECTIONS SHALL BE ASSEMBLED AND INSPECTED IN ACCORDANCE WITH RCSC SPECIFICATIONS FOR STRUCTURAL JOINTS USING ASTM A325 OR ASTM A490 BOLTS.

M-16 STRUCTURAL WELDED JOINTS SHALL CONFORM TO THE PROVISIONS OF AWS D1.1, STRUCTURAL WELDING CODE BY AMERICAN WELDING SOCIETY. PROOF OF WELDER CERTIFICATION SHALL BE AVAILABLE AT THE JOB SITE DURING TIMES OF INSPECTION.

M-17 SPECIAL INSPECTIONS SHALL BE IN ACCORDANCE WITH SPECIFICATIONS AND THE BUILDING CODE.

FOUNDATIONS

F-1 NO NEW STRUCTURES ARE PROPOSED FOR CONSTRUCTION UNDER THIS PROJECT.

F-2 ALLOWABLE SOIL BEARING PRESSURE

CONCRETE (CAST-IN-PLACE)

C-1 DESIGN OF CONCRETE ELEMENTS INCLUDING WALLS, FORMED SLABS, BEAMS, AND COLUMNS IS IN ACCORDANCE WITH ACI 318 (CODE REQUIREMENTS FOR STRUCTURAL CONCRETE) AND 350 (CODE REQUIREMENTS FOR ENVIRONMENTAL ENGINEERING CONCRETE STRUCTURES).

C-2 FOR CONCRETE MIX DESIGN SEE SPECIFICATION SECTION 03300.

C-3 CONCRETE STRENGTH CLASSES (28-DAY COMPRESSIVE STRENGTH):
A) CLASS A - (4,000 PSI) CLASS A STRUCTURAL CONCRETE SHALL BE USED IN ALL STRUCTURES UNLESS NOTED OTHERWISE.
B) CLASS B - (4,000 PSI) CLASS B STRUCTURAL CONCRETE SHALL BE USED AT LOCATIONS SHOWN OR APPROVED ON A CASE BY CASE BASIS.
C) CLASS C - (3,000 PSI) CLASS C CONCRETE SHALL BE USED IN ALL CURBS, GUTTERS, CATCH BASINS, FENCE AND GUARD POST EMBEDMENTS, ENCASEMENTS, AND ALL OTHER CONCRETE APPURTENANT TO ELECTRICAL FACILITIES UNLESS NOTED OTHERWISE. CLASS C CONCRETE SHALL ALSO BE USED FOR THRUST BLOCKS, PIPE TRENCH CUT-OFF BLOCKS AND CRADLES, MUDMATS AND CONCRETE FILLS WHERE THEY ARE UNREINFORCED.

C-4 ALL BAR REINFORCING SHALL CONFORM TO ASTM A615, GRADE 60, OR ASTM A706, GRADE 60 WHERE REINFORCEMENT IS TO BE WELDED IN ACCORDANCE WITH AWS D1.4. WELDED WIRE FABRIC SHALL CONFORM TO ASTM A185.

C-5 CONCRETE COVER FOR REINFORCING (UNLESS NOTED OTHERWISE ON THE DRAWINGS):
A) CONCRETE DEPOSITED DIRECTLY AGAINST SOIL: 3"
B) FORMED CONCRETE EXPOSED TO EARTH OR WEATHER
1. SLABS (#5 OR SMALLER) 1 1/2"
2. SLABS (#6 OR LARGER) 2"
3. WALLS 12" OR MORE 2"
4. WALLS LESS THAN 12" (#5 OR SMALLER) 1 1/2"
5. WALLS LESS THAN 12" (#6 OR LARGER) 2"
6. BEAMS AND COLUMNS (TO MAIN REINFORCEMENT) 2"
7. BEAMS AND COLUMNS (TO TIES OR STIRRUPS) 1 1/2"
8. FOR SURFACES EXPOSED TO WATER OR SEWAGE, ADD 1/2" TO ABOVE

C-6 SPLICES SHALL BE CLASS 'B' CONFORMING TO THE PROVISIONS OF ACI 318 UNLESS NOTED OTHERWISE.

C-7 CONSTRUCTION JOINTS SHALL BE LOCATED AS SHOWN ON THE DRAWINGS. CONSTRUCTION JOINTS NOT SHOWN SHALL BE SUBMITTED BY THE CONTRACTOR FOR THE APPROVAL OF THE ENGINEER PRIOR TO SUBMITTING REBAR SHOP DRAWINGS. VERTICAL CONSTRUCTION JOINTS IN WALLS AND HORIZONTAL JOINTS IN SLABS SHALL BE PROVIDED AT A SPACING NOT GREATER THAN 45 FEET ON CENTER. FOR EXPOSED WALLS WITH FLUID OR EARTH ON THE OPPOSITE SIDE, THE SPACING BETWEEN VERTICAL JOINTS SHALL BE A MAXIMUM OF 25 FEET.

C-8 WHERE HORIZONTAL CONSTRUCTION JOINTS, LOCATED ABOVE THE FOUNDATION SLAB, EXTEND BEYOND WHERE NEEDED, THEY SHALL BE TERMINATED AT A VERTICAL CONSTRUCTION JOINT APPROVED BY THE ENGINEER.

C-9 SLABS WITH SLOPING SURFACES SHALL HAVE THE INDICATED SLAB THICKNESS MAINTAINED AS THE MINIMUM. SLAB BOTTOMS CAN EITHER SLOPE WITH THE TOP SURFACE OR BE LEVEL. REINFORCEMENT IN SLABS WITH SLOPING SURFACES SHALL BE PLACED AT THE REQUIRED CLEARANCE FROM THE SLAB SURFACE.

C-10 ALL EXPOSED CORNERS SHALL HAVE A 3/4" CHAMFER OR A 1/2" RADIUS TOOLED CORNER.

C-11 EQUIPMENT SUPPORTS, ANCHORAGES, OPENINGS, RECESSES AND REVEALS NOT SHOWN ON THE STRUCTURAL DRAWINGS BUT REQUIRED BY OTHER CONTRACT DOCUMENTS, SHALL BE PROVIDED FOR PRIOR TO PLACING CONCRETE.

C-12 REINFORCING BARS AND ACCESSORIES SHALL NOT BE IN CONTACT WITH ANY METAL PIPE, PIPE FLANGE, METAL CONDUIT, OR OTHER METAL PARTS EMBEDDED IN CONCRETE. A MINIMUM CLEARANCE OF 2" SHALL BE PROVIDED.

C-13 DOWELS, ANCHOR BOLTS, PIPES, WATERSTOPS AND OTHER EMBEDDED ITEMS SHALL BE HELD SECURELY IN POSITION WHILE CONCRETE IS BEING PLACED.

C-14 CONDUITS AND OTHER SIMILAR ITEMS EMBEDDED IN OR PENETRATING THROUGH CONCRETE SHALL BE SPACED ON CENTER NOT LESS THAN 3 TIMES THEIR OUTSIDE DIMENSION, BUT NOT LESS THAN 2 1/2" CLEAR. WHEN SUCH ITEMS ARE EMBEDDED IN WALLS OR SLABS, THEY SHALL NOT OCCUPY MORE THAN 1/3 OF THE MEMBER THICKNESS.

C-15 AT ALL TYPICAL CURBS, EQUIPMENT PADS, AND PIPE SUPPORT PIERS, REINFORCING DOWELS SHOWN MAY BE REPLACED WITH MATCHING DOWELS SET IN EPOXY IN DRILLED HOLES AS SPECIFIED. DOWELS LOCATED CLOSER THAN 3" FROM ANY EDGE OF CONCRETE SHALL NOT BE REPLACED WITH DRILLED DOWELS.

C-16 DRILLED ADHESIVE DOWELS (WHERE DOWELS ARE SHOWN TO BE PLACED INTO HARDENED CONCRETE):
A) THE HOLE DIAMETER SHALL BE NO LARGER THAN 1/8" GREATER THAN THE DIAMETER OF THE REINFORCING BAR AT THE DEFORMATIONS.
B) THE DEPTH OF EMBEDMENT SHALL BE 12 BAR DIAMETERS, UNLESS NOTED OTHERWISE.
C) ADJUST THE DOWEL LOCATIONS AS NEEDED TO AVOID DRILLING THROUGH ANY REINFORCING BARS. IF THE LOCATION NEEDS TO BE MODIFIED, CONTACT THE ENGINEER.

C-17 CLEAR DISTANCE FROM ANCHOR BOLTS TO ANY CONCRETE EDGE SHALL BE 4" MINIMUM UNLESS NOTED OTHERWISE.

DEMOLITION

D-1 FOR DEMOLITION REQUIREMENTS, REFER TO SPECIFICATION 01540 - DEMOLITION AND REMOVAL OF EXISTING STRUCTURES AND EQUIPMENT.

D-2 CONCRETE DEMOLITION WITHIN STRUCTURES BEING MODIFIED SHALL BE SELECTIVE DEMOLITION BY CORE DRILLING OR SAWCUTTING AND CAREFUL REMOVAL OF CONCRETE SHOWN TO BE REMOVED. NO OVER CUTTING OF AREAS TO BE DEMOLISHED SHALL BE PERMITTED. CONTRACTOR SHALL CORE DRILL CORNERS OF OPENING PRIOR TO SAWCUTTING. EXPLOSIVES AND VIBRATORY HAMMERS SHALL NOT BE USED FOR DEMOLITION WORK.

D-3 UNLESS ANCHORING DEVICES AND/OR REINFORCEMENT IS NOTED TO REMAIN FOLLOWING DEMOLITION, REMOVE AND/OR BURN BACK ANCHORS AND REINFORCEMENT STEEL 1/2" MIN BELOW SURFACE. VOIDS CREATED SHALL BE FILLED WITH EPOXY RESIN BINDER.

D-4 WHERE DRAWINGS INDICATE A CONCRETE EQUIPMENT PAD TO BE DEMOLISHED, THE FLOOR SLAB SURFACE SHALL BE REPAIRED AS APPROVED BY ENGINEER. FOLLOWING SELECT DEMOLITION AND REMOVAL OF THE EQUIPMENT PAD REMOVAL THE REPAIR SHALL BE:
A. SAWCUT THE FLOOR AROUND THE EQUIPMENT PAD PERIMETER TO A DEPTH OF 1/4".
B. SCARIFY AND REMOVE SLAB CONCRETE WITHIN THE PERIMETER TO A NOMINAL 1/4" DEPTH CLEAN AND REMOVE ALL CONCRETE LAITANCE.
C. RESURFACE THE AREA BY APPLYING A POLYMER MODIFIED OR SILICA FUME ENHANCED CEMENTITIOUS REPAIR MORTAR, APPROVED BY THE ENGINEER, FOLLOWING THE MANUFACTURER'S SURFACE PREPARATION AND APPLICATION RECOMMENDATIONS. LEVEL AND FINISH THE SURFACE TO MATCH THE FLOOR SLAB SURROUNDING AREA.

D-5 CONCRETE SURFACES LEFT EXPOSED FOLLOWING DEMOLITION SHALL BE SEALED WITH EPOXY RESIN COATING SUCH AS "SIKAGARD" BY SIKA CORPORATION, "DURACOTE 240" BY TAMMS INDUSTRIES, OR APPROVED EQUAL.

D-6 A DETAILED CONSTRUCTION AND DEMOLITION PLAN SHALL BE SUBMITTED TO THE ENGINEER AND APPROVED BY THE ENGINEER AND OWNER PRIOR TO BEGINNING CONSTRUCTION. ANY SHUTDOWNS SHALL BE SUBMITTED TO, COORDINATED WITH, AND APPROVED BY THE OWNER. ONCE APPROVED, CONTRACTOR SHALL PROVIDE A MINIMUM OF 14 DAYS NOTICE TO OWNER PRIOR TO SHUTDOWN.

EXISTING INFORMATION

X-1 ALL EXISTING INFORMATION SHOWN ON THESE DRAWINGS INCLUDING LOCATION, DIMENSIONS, ELEVATIONS, AND CONFIGURATIONS IS DERIVED FROM RECORD DRAWINGS "WATERWORKS AND SANITARY SEWER EXTENTIONS FOR CITY OF HALLANDALE" JULY 1967, AND IS NOT GUARANTEED TO BE COMPLETE OR CORRECT. RECORD DRAWINGS ARE AVAILABLE FOR REVIEW AT THE CITY'S OFFICES.

X-2 ELEVATIONS IN RECORD DRAWINGS ARE BASED ON THE NATIONAL GEODETIC VERTICAL DATUM OF 1929. ELEVATIONS ON THESE DRAWINGS ARE BASED ON THE NATIONAL GEODETIC VERTICAL DATUM OF 1929.

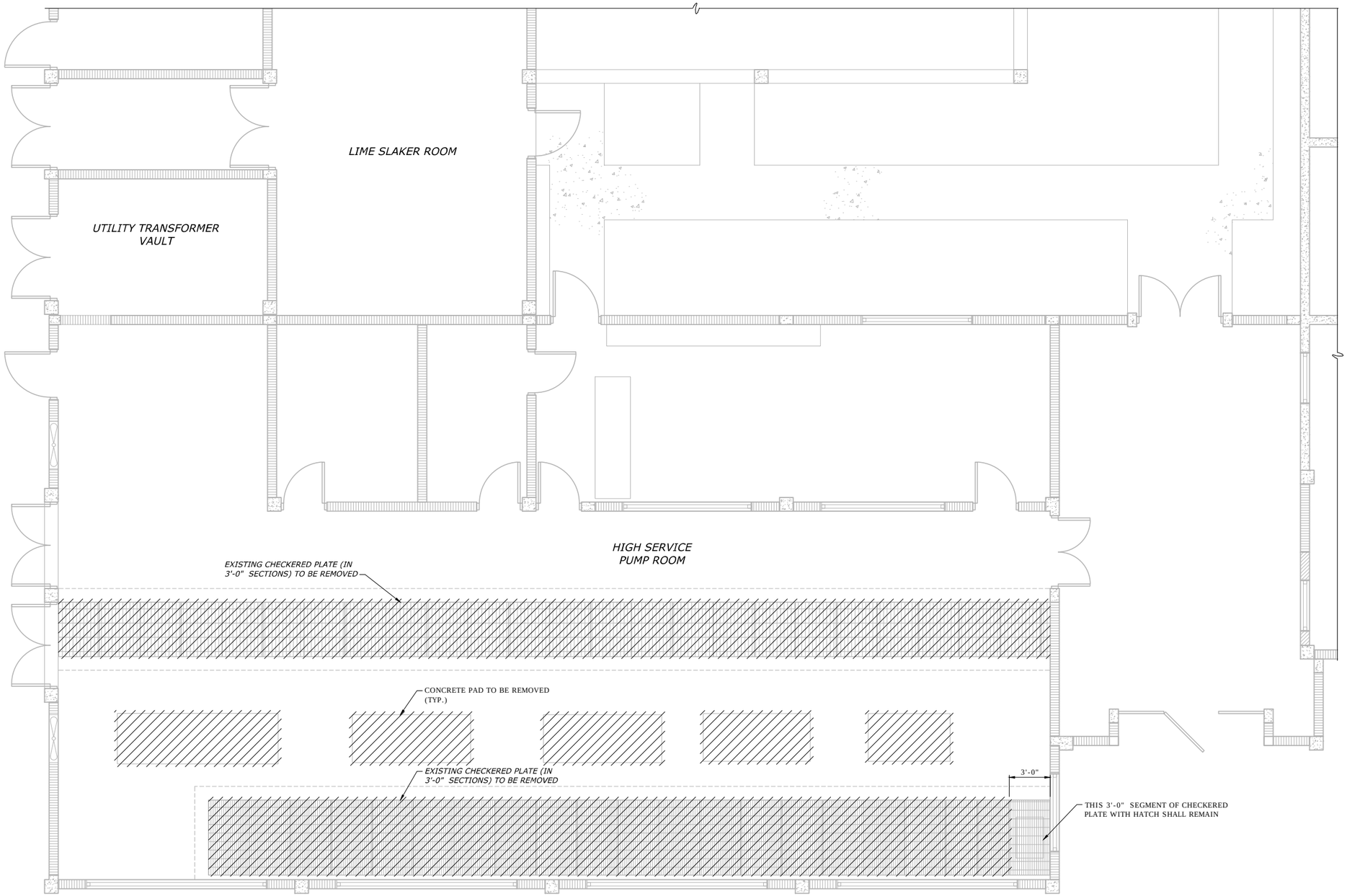

LEGEND:

EXISTING

TO BE REMOVED

1/4"=1'-0"

1 0 1 2 3 7'

REV	ISSUED FOR	DATE	BY

PROJECT ENGINEER:	-
DESIGNED BY:	G.A.B.
DRAWN BY:	G.B.
CHECKED BY:	
IF THIS BAR DOES NOT MEASURE 1" THEN DRAWING IS NOT TO FULL SCALE	0 1/2" 1"

GEORGE A. BROWN, PE NO. 56076

Hazen

HAZEN AND SAWYER
4000 HOLLYWOOD BOULEVARD, SUITE 750N
HOLLYWOOD, FLORIDA 33021
CERTIFICATE OF AUTHORIZATION NO. : 2771

CITY OF HALLANDALE BEACH

WATER TREATMENT PLANT
HIGH SERVICE PUMP REPLACEMENT

Hallandale Beach
PROSPERITY, INNOVATION, OPPORTUNITY

HIGH SERVICE PUMPS
DEMOLITION PLAN

DATE:	SEPTEMBER 2017
HAZEN NO.:	40621-000
CONTRACT NO.:	1
DRAWING NUMBER:	S-02

50% SUBMITTAL

File: H:\40621-000 HALLANDALE HIGH SERVICE PUMPS\DRAWINGS\STRUC\S-02 Saved By LAURA Save Date: 2017/08/11 10:10 AM
PLOT DATE: 2017/08/11 10:11:46 AM BY: LAURA

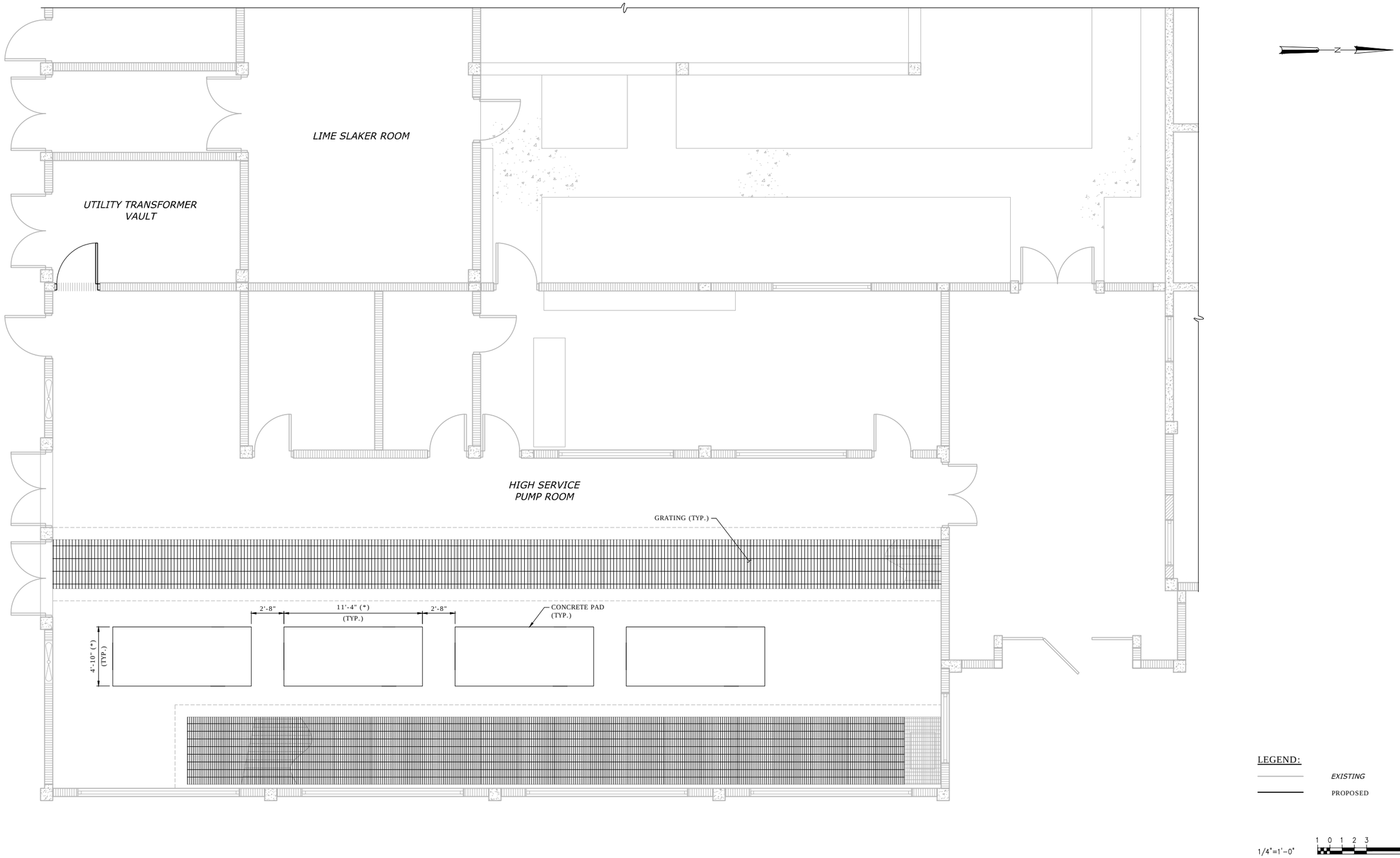

REV	ISSUED FOR	DATE	BY

PROJECT ENGINEER: -
DESIGNED BY: G.A.B.
DRAWN BY: G.B.
CHECKED BY:
IF THIS BAR DOES NOT MEASURE 1" THEN DRAWING IS NOT TO FULL SCALE 0 1/2" 1"

GEORGE A. BROWN, PE NO. 56076

Hazen

HAZEN AND SAWYER
4000 HOLLYWOOD BOULEVARD, SUITE 750N
HOLLYWOOD, FLORIDA 33021
CERTIFICATE OF AUTHORIZATION NO. : 2771

CITY OF HALLANDALE BEACH

WATER TREATMENT PLANT
HIGH SERVICE PUMP REPLACEMENT

Hallandale Beach
PROGRESS. INNOVATION. OPPORTUNITY.

HIGH SERVICE PUMPS
PROPOSED PLAN

DATE: SEPTEMBER 2017
HAZEN NO.: 40621-000
CONTRACT NO.: 1
DRAWING NUMBER: S-03

50% SUBMITTAL

File: H:\40621-000 HALLANDALE HIGH SERVICE PUMPS\DRAWINGS\STRUCT\S-03 Saved By: LAURA Save Date: 2017/08/10 9:50 AM
PLOT DATE: 2017/08/11 11:11:55 AM BY: LAURA

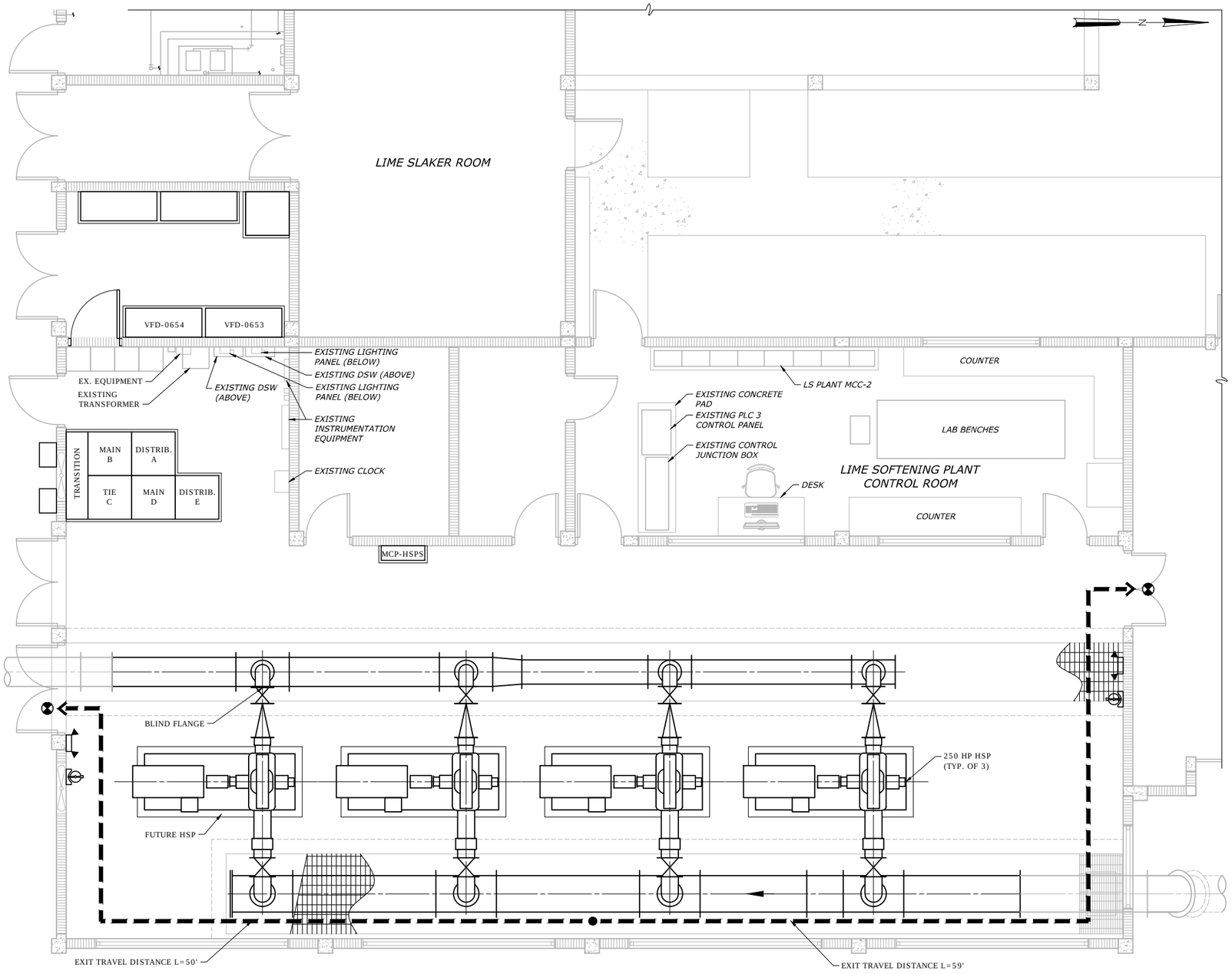

LIFE SAFETY ANALYSIS

CODE REQUIREMENTS

CATEGORY	FBC CHPTER	FBC REQUIREMENTS		FFPC CHAPTER	FFPC REQUIREMENTS	
OCCUPANCY	306.3	F-2, FACTORY INDUSTRIAL LOW-HAZARD (PER FBC306.3)		NFPA 101 40.1.4.1.2	SPECIAL-PURPOSE INDUSTRIAL	
CONSTRUCTION TYPE	602.2	TYPE II-B		NFPA 101 TABLE A8.2.1.1	TYPE II (000)	
	TABLE 503	MAXIMUM NUMBER OF STORIES	3			
		ACTUAL NUMBER OF STORIES	1			
		MAXIMUM AREA (PER FLOOR)	23000 SF			
		ACTUAL AREA	1,267 SF			
		MAXIMUM BUILDING HEIGHT	55 FT			
		ACTUAL BUILDING HEIGHT	13 FT			
OCUPANT LOAD	TABLE 1004.1.2	100 SF/OCCUPANT 945/100=9	9 OCCUP.	NFPA 101 TABLE 7.3.1.2	N/A	
EGRESS CAPACITY	1005.1	0.2 INCHES PER OCCUPANT AT DOORS 9X0.2=1.8	1.8 INCHES	NFPA 101 TABLE 7.3.3.1	0.2 INCHES PER OCCUPANT AT COMPONENTS	N/A
		0.3 INCHES PER OCCUPANT AT STAIRS	2.7 INCHES		0.3 INCHES PER OCCUPANT AT STAIRS	N/A
	1018.2 EXCEPTION 2	MINIMUM CORRIDOR WIDTH	36 INCHES		MINIMUM CORRIDOR WIDTH	36 INCHES
	1009.4 EXCEPTION 1	MINIMUM STAIR WIDTH	36 INCHES	NFPA 101 7.2.2.2.1.2	MINIMUM STAIR WIDTH	36 INCHES
	1008.1.1	MINIMUM CLEAR OPENING OF EXIT DOORS	32 INCHES	NFPA 101 7.2.1.2.3.2	MINIMUM DOOR OPENING	32 INCHES
EXIT ACCESS TRAVEL DISTANCE	TABLE 1016.2	MAXIMUM	300 FT	NFPA 101 TABLE 40.2.6	MAXIMUM	300 FT
COMMON PATH OF TRAVEL	1014.3	MAXIMUM	75 FT	NFPA 101 TABLE 40.2.5	MAXIMUM	50 FT
DEAD END CORRIDORS	1018.4	MAXIMUM	20 FT	NFPA 101 TABLE 40.2.5	MAXIMUM	50 FT
FIRE PROTECTION	TABLE 601 AND TABLE 602	STRUCTURAL FRAME	0 HR	NFPA 101 TABLE.2.1.2	STRUCTURAL FRAME	0 HR
		BEARING WALLS			BEARING WALLS	
		EXTERIOR	0 HR		EXTERIOR	0 HR
		INTERIOR	0 HR		INTERIOR	0 HR
		NON BEARING WALLS			NON BEARING WALLS	
		EXTERIOR (FIRE SEPARATION DISTANCE 5FT<X<100 FT)	N/A		EXTERIOR (FIRE SEPARATION DISTANCE >30 FT)	N/A
		INTERIOR	0 HR		INTERIOR	0 HR
		FLOOR CONSTRUCTION	0 HR		FLOOR CONSTRUCTION	0 HR
		ROOF CONSTRUCTION	0 HR		ROOF CONSTRUCTION	0 HR
	903.2	AUTO FIRE SPRINKLER	NR	NFPA 101 40.3.5	NR	

EXTINGUISHER REQUIREMENTS (NFPA 1, TABLE 13.6.8.2.1.1 UNLESS INDICATED OTHERWISE):

ITEM	AIR COMPRESSOR ROOM	ELECTRICAL ROOM
FIRE CLASS (PER NFPA 10, ARTICLE 5.2.1)	CLASS A	CLASS C
HAZARD CLASS (PER NFPA 10, ARTICLE 5.4.1.1)	LIGHT HAZARD	LIGHT HAZARD
MIN RATING	2-A	2-A
MAX FLOOR AREA (PER EXTINGUISHER)	11,250 SF	11,250 SF
MAX TRAVEL DISTANCE TO EXTINGUISHER	75 FT	75 FT
# OF EXTINGUISHERS NEEDED/ PROVIDED	1 / 1	1 / 1
RATING	3A:40B:C (ABC DRY CHEMICAL TYPE)	3A:40B:C (ABC DRY CHEMICAL TYPE)

LIFE SAFETY LEGEND

- ENTRANCE/EXIT
- DIRECTION OF TRAVEL
- DEAD END CORRIDOR
- FIRE EXTINGUISHER
- EMERGENCY LIGHT FIXTURE
- 1-HOUR FIRE RATED CMU WALL
- NON-FIRE RATED CMU WALL
- FIRE AUDIBLE & VISUAL ALARM
- EXIT SIGN
- EXIT SIGN WALLMOUNT
- FIRE ALARM PULL STATION WALL MOUNTED 48" A.F.F

REV	ISSUED FOR	DATE	BY

PROJECT ENGINEER: -
DESIGNED BY: G.A.B.
DRAWN BY: G.B.
CHECKED BY:
IF THIS BAR DOES NOT MEASURE 1" THEN DRAWING IS NOT TO FULL SCALE 0 1/2" 1"

JEAN PAUL SILA, PE No. 66522

Hazen
HAZEN AND SAWYER
4000 HOLLYWOOD BOULEVARD, SUITE 750N
HOLLYWOOD, FLORIDA 33021
CERTIFICATE OF AUTHORIZATION NO. : 2771

CITY OF HALLANDALE BEACH

WATER TREATMENT PLANT
HIGH SERVICE PUMP REPLACEMENT

Hallandale Beach
PROGRESS. INNOVATION. OPPORTUNITY

PUMP STATION
LIFE SAFETY PLAN

DATE: SEPTEMBER 2017
HAZEN NO.: 40621-000
CONTRACT N0.: 1
DRAWING NUMBER: A-01

50% SUBMITTAL

File: H:\40621-000 HALLANDALE HIGH SERVICE PUMPS\DRAWINGS\ARCH\A-01 Saved By: LAURA Save Date: 2017/08/11 10:23 AM
PLOT DATE: 2017/08/11 11:12:06 AM BY: LAURA

LIGHTING:

X DENOTES FIXTURE TYPE (TYP.)
SEE SPECIFICATION 16500 FOR FIXTURE SCHEDULE
# DENOTES CIRCUIT NUMBER (TYP.)

RECTANGULAR FIXTURE

LEFT: CEILING MOUNTED FIXTURE
RIGHT: WALL MOUNTED FIXTURE

EMERGENCY WALL-MOUNTED FIXTURE:
LEFT: STANDARD
RIGHT: REMOTE-HEAD

LEFT: CEILING MOUNTED EXIT SIGN
RIGHT: WALL MOUNTED EXIT SIGN
SHADED PORTION DENOTES SIGN FACE

POLE-MOUNTED FIXTURE

PHOTOCELL

LEFT: CEILING MOUNTED OCCUPANCY SENSOR
RIGHT: WALL MOUNTED OCCUPANCY SENSOR
X DENOTES TYPE

RECEPTACLES:

X DENOTES RECEPTACLE TYPE (TYP.):
GFCI DENOTES GROUND FAULT CIRCUIT INTERRUPT
UPS DENOTES UNINTERRUPTIBLE POWER SUPPLY
WPCR DENOTES WEATHERPROOF CORROSION RESISTANT
# DENOTES CIRCUIT NUMBER (TYP.)

RECEPTACLES:
LEFT: SIMPLEX
MIDDLE: DUPLEX
RIGHT: QUADRUPLEX

MULTI-OUTLET RECEPTACLE:
LEFT: SIMPLEX
RIGHT: DUPLEX

OTHER RECEPTACLES:
LEFT: 240 VOLT
RIGHT: SPECIAL PURPOSE

HVAC AND FIRE ALARM

FIRE ALARM CONTROL PANEL

FIRE ALARM ANNUNCIATOR PANEL

FIRE ALARM PULL STATION

FIRE ALARM INDICATOR:
X DENOTES ALERT TYPE (TYP.):
A DENOTES AUDIBLE
V DENOTES VISIBLE (# DENOTES STROBE INTENSITY)

FIRE ALARM INDICATOR MOUNTED
ABOVE A FIRE ALARM PULL
STATION

DUCT DETECTOR

SMOKE DETECTOR:
X DENOTES TYPE:
Z DENOTES IONIZATION
P DENOTES PHOTOELECTRIC
T DENOTES THERMAL

HEAT DETECTOR

THERMOSTAT

AMBIENT TEMPERATURE TRANSMITTER

SWITCHES

WALL SWITCH:
X DENOTES TYPE:
NO SUBSCRIPT DENOTES SINGLE-POLE SWITCH
3 DENOTES 3-WAY SWITCH
4 DENOTES 4-WAY SWITCH
M DENOTES MANUAL MOTOR STARTER
# DENOTES CIRCUIT NUMBER
WPCR DENOTES WEATHERPROOF CORROSION RESISTANT

COMBINATION MOTOR STARTER

DISCONNECT SWITCH

LOCAL CONTROL STATION

ELEMENTARY CONTROL SCHEMATICS

3-POSITION SELECTOR SWITCH:
HOA DENOTES HAND/OFF/AUTO
LOR DENOTES LOCAL/OFF/REMOTE
FOR DENOTES FORWARD/OFF/REVERSE

PUSHBUTTON SWITCHES:
LEFT: N.O.
RIGHT: N.C.
TEXT DENOTES LEGEND PLATE

EMERGENCY STOP MUSHROOM HEAD PUSHBUTTON SWITCH (N.C.):
TEXT DENOTES LEGEND PLATE

PUSHBUTTON SWITCH N.C. WITH LOCK-OUT:
TEXT DENOTES LEGEND PLATE

SELECTOR SWITCH:
LEFT: STANDARD
RIGHT: SPRING-RETURN
TEXT DENOTES LEGEND PLATE

SOLID-STATE OVERLOAD RELAY

THERMAL OVERLOAD RELAY

	NO	NC
DISCONNECT SWITCHES		
CONTACTS	X	X
TORQUE SWITCH	–	NS
LIMIT SWITCHES	LS	LS

NOTATION LEGEND:
NO/NC: NORMALLY OPEN/CLOSED
RO/RC: RISE-TO-OPEN/CLOSE
FO/FC: FALL-TO-OPEN/CLOSE
TO/TC: TIME-OPEN/CLOSE

CONTACTS:
TEXT DENOTES COIL ID

SWITCHES:
TEXT DENOTES TAG NUMBER

	NORC	NOFC	NCRO	NCFO
TEMPERATURE SWITCHES/ THERMOSTATS	TS	–	TS	–
PRESSURE SWITCHES	PS	PS	PS	PS
LEVEL SWITCHES	LS	LS	LS	LS
FLOW SWITCHES	FS	FS	FS	FS

	NOTC	NOTO	NCTO	NCTC
TIME DELAY SWITCHES	TD	TD	TD	TD

INDICATOR LIGHT:
LEFT: STANDARD/RIGHT: PUSH-TO-TEST
X DENOTES COLOR

RUN TIME METER

SOLENOID VALVE

MOTOR PROTECTION RELAY

CPT 480/120VAC — CONTROL POWER TRANSFORMER

MECHANICAL INTERLOCK CONNECTION

MOTOR SPACE HEATER

COIL:
X DENOTES TYPE:
M DENOTES MOTOR STARTER
CR DENOTES CONTROL RELAY
TD DENOTES TIME DELAY RELAY
TR DENOTES TIMER RANGE
TS DENOTES TIMER SETPOINT
PR DENOTES INTERPOSING PILOT RELAY
LC DENOTES LIGHTING CONTACTOR
Y DENOTES REFERENCE LINE NUMBER

EQUIPMENT/DEVICE LOCATION SYMBOLS

LOCATED IN MCC

LOCATED IN STAND-ALONE MOTOR STARTER/CONTROLLER

LOCATED IN FIELD

LOCATED AT PANEL:
X DENOTES PANEL ID:
L DENOTES LOCAL CONTROL STATION

SINGLE-LINE DIAGRAMS

XFMR
kVA
480-120/208V
3P/4W
DRY TRANS
TRANSFORMER

PROTECTIVE RELAY:
NUMBER DENOTES IEEE DEVICE FUNCTION

MOTOR AND TYPICAL ADDITIONAL DEVICES:
TSH: TEMPERATURE SWITCH
MSH: MOTOR SPACE HEATER
CF: COOLING FAN
TE: TEMPERATURE ELEMENT
ME: MOISTURE DETECTOR

INSTRUMENT TAG:
X DENOTES INSTRUMENT TYPE
Y DENOTES INSTRUMENT NUMBER
SEE DRAWING I1 FOR INSTRUMENT ABBREVIATIONS

100A — FUSE

100A 3P — FUSED DISCONNECT SWITCH

30A 3P — DISCONNECT SWITCH

30A 3P — FUSED DISCONNECT SWITCH

LOW-VOLTAGE POWER CIRCUIT BREAKER:
LEFT: FIXED-MOUNT
RIGHT: DRAWOUT
E.O. DENOTES ELECTRICALLY OPERATED
LSIG DENOTES INSTALLED TRIP FUNCTIONS:
L DENOTES LONG-TIME
S DENOTES SHORT-TIME
I DENOTES INSTANTANEOUS
G DENOTES GROUND FAULT
Z DENOTES ZONE-SELECTIVE INTERLOCKING
CTR DENOTES BREAKER-SPECIFIC CT AND RATIOS

MEDIUM-VOLTAGE DRAWOUT POWER CIRCUIT BREAKER:
E.O. DENOTES ELECTRICALLY OPERATED
BATT. DENOTES BATTERY BACKUP POWER

LOW-VOLTAGE MOLDED CASE CIRCUIT BREAKER
LEFT: THERMAL-MAGNETIC TRIP UNIT
RIGHT: ELECTRONIC TRIP UNIT

30A MCP — MOTOR CIRCUIT PROTECTOR

GROUND

600:5 (3) — CT:
NUMBERS DENOTE CT WINDING RATIO AND CT QUANTITY

50:5 (1) — GFCT:
NUMBERS DENOTE GFCT WINDING RATIO AND GFCT QUANTITY

480:120 (3) — PT:
NUMBERS DENOTE PT WINDING VOLTAGES AND PT QUANTITY

DRAW-OUT ELEMENT

LEFT: PANELBOARD
RIGHT: COMBINATION POWER UNIT
X DENOTES PANEL ID

LIGHTNING ARRESTOR

SINGLE-LINE DIAGRAMS, CONT'D.

LEFT: RESISTOR
RIGHT: LINE REACTOR:
#% DENOTES IMPEDANCE

CAPACITOR

SHUNT TRIP

SURGE PROTECTIVE DEVICE

KIRK-KEY INTERLOCK

LEFT: FVNR STARTER:
X DENOTES NEMA SIZE
DP DENOTES DEFINITE PURPOSE CONTACTOR
RIGHT: FVR STARTER

LEFT: VFD WITH LINE REACTOR
MIDDLE: VFD WITH HARMONIC FILTER
RIGHT: VFD WITH LINE REACTOR AND FVNR BYPASS
X DENOTES NEMA SIZE

LEFT: RVSS STARTER
RIGHT: RVSS STARTER WITH FVNR BYPASS
X DENOTES NEMA SIZE

VFD WITH RVSS BYPASS

RVAT STARTER:
X DENOTES NEMA SIZE
#% DENOTES TAP SETTING

SINGLE-LINE DIAGRAMS, CONT'D.

GENERATOR

CONTACTOR-STYLE ATS OR MTS

CONTACTOR-STYLE ATS OR MTS WITH OFF POSITION

CONTACTOR-STYLE ATS OR MTS, SERVICE-ENTRANCE RATED

MCCB-STYLE ATS OR MTS

DRAWOUT CB-STYLE ATS OR MTS

MISC PLAN VIEW SYMBOLS

EQUIPMENT CONNECTION

GROUND RODS:
LEFT: BURIED
RIGHT: IN TESTWELL

DUCTBANK SECTION CUT IDENTIFIER:
DBXX DENOTES DUCTBANK ID
EXX DENOTES DRAWING NUMBER
WHERE SECTION CUT IS LOCATED

DUCTBANK TAG:
X DENOTES DUCTBANK ID

CABLE TRAY TAG:
X DENOTES CABLE TRAY ID
Y DENOTES SCHEDULE REFERENCE

INSTRUMENT TAG:
X DENOTES INSTRUMENT TYPE
# DENOTES INSTRUMENT NUMBER
SEE DRAWING I1 FOR INSTRUMENT ABBREVIATIONS

CONDUIT TAGS:
P DENOTES POWER
C DENOTES CONTROL
I DENOTES INSTRUMENTATION
XXXX DENOTES CONDUIT ID
XXX-XXX DENOTES CONDUIT ID

COMMUNICATIONS

TELEPHONE OR NETWORK DROP

PAGER RECEPTACLE

HORN/LIGHT DEVICE

PA UNIT

WIRING

CONDUIT HOME RUN

CONDUIT EXPOSED

CONCRETE ENCASED CONDUIT

CONDUIT CONCEALED

FLEXIBLE CONDUIT

CONCRETE ENCASED DUCTBANK

LEFT: CONDUIT RISE (TURN UP)
RIGHT: CONDUIT DROP (TURN DOWN)

REV	ISSUED FOR	DATE	BY

PROJECT ENGINEER: -
DESIGNED BY: F.A.M.
DRAWN BY: G.K.
CHECKED BY:
IF THIS BAR DOES NOT MEASURE 1" THEN DRAWING IS NOT TO FULL SCALE — 0 1/2" 1"

J. BRAD PICKETT, PE NO. 74106

Hazen
HAZEN AND SAWYER
4000 HOLLYWOOD BOULEVARD, SUITE 750N
HOLLYWOOD, FLORIDA 33021
CERTIFICATE OF AUTHORIZATION NO. : 2771

CITY OF HALLANDALE BEACH

WATER TREATMENT PLANT
HIGH SERVICE PUMP REPLACEMENT

Hallandale Beach
PROGRESS. INNOVATION. OPPORTUNITY

LEGEND AND SYMBOLS

DATE: SEPTEMBER 2017
HAZEN NO.: 40621-000
CONTRACT N0.: 1
DRAWING NUMBER: E-01

50% SUBMITTAL

File: H:\40621-000 HALLANDALE HIGH SERVICE PUMPS\DRAWINGS\ELEC\E-01 Saved By: CALLS Save Date: 2017/08/10 12:12 PM
PLOT DATE: 2017/08/11 11:12:24 AM BY: LAURA

ABBREVIATIONS

AE	ANALYSIS ELEMENT
AHU	AIR HANDLING UNIT
AIC	AMPERE INTERRUPTING CAPACITY
AIT	ANALYSIS INDICATING TRANSMITTER
ANSI	AMERICAN NATIONAL STANDARDS INSTITUTE
ASCE	AMERICAN SOCIETY OF CIVIL ENGINEERS
ASME	AMERICAN SOCIETY OF MECHANICAL ENGINEERS
AF	AMPERE FRAME
AT	AMPERE TRIP
ATS	AUTOMATIC TRANSFER SWITCH
BC	BYPASS CONTACTOR
BKR	BREAKER
(L/V)CP	(LOCAL/VENDOR) CONTROL PANEL
CPT	CONTROL POWER TRANSFORMER
CT	CURRENT TRANSFORMER
DB	DUCTBANK
DSW	DISCONNECT SWITCH
EHH	ELECTRIC HAND HOLE
EMH	ELECTRIC MANHOLE
EO	ELECTRICALLY OPERATED
ETM	ELAPSED TIME METER
ETU	ELECTRONIC TRIP UNIT
FAAP	FIRE ALARM ANNUNCIATOR PANEL
FACP	FIRE ALARM CONTROL PANEL
FS	FLOW SWITCH
FSL	FLOW SWITCH LOW
FVNR	FULL VOLTAGE NON-REVERSING
FVR	FULL VOLTAGE REVERSING
GFCI	GROUND FAULT CIRCUIT INTERRUPTER
GFCT	GROUND FAULT CURRENT TRANSFORMER
GNG	GO-NO GO
GND	GROUND
HOA	HAND-OFF-AUTO
HPU	HYDRAULIC POWER UNIT
IC	INPUT CONTACTOR
IEEE	INSTITUTE OF ELECTRICAL AND ELECTRONICS ENGINEERS
ISO	INTERNATIONAL ORGANIZATION FOR STANDARDIZATION
JB	JUNCTION BOX
LCS	LOCAL CONTROL STATION
LP	LIGHTING PANEL
LS	LEVEL SWITCH
LSL	LEVEL SWITCH LOW
LSLL	LEVEL SWITCH LOW-LOW
LSH	LEVEL SWITCH HIGH
LSHH	LEVEL SWITCH HIGH-HIGH
LT	LEVEL TRANSMITTER
MFR	MULTI-FUNCTION RELAY
MH	MANHOLE
MOD	MOTOR OPERATED DAMPER
MOG	MOTOR OPERATED GATE
MOL	MOTOR OPERATED LOUVER
MOV	MOTOR OPERATED VALVE
MPR	MOTOR PROTECTION RELAY
MTD	MOUNTED
MTS	MANUAL TRANSFER SWITCH
MWTS	MOTOR WINDING TEMPERATURE SWITCH
NC	NORMALLY CLOSED
NEC	NATIONAL ELECTRICAL CODE
NEMA	NATIONAL ELECTRICAL MANUFACTURERS ASSN
NFPA	NATIONAL FIRE PROTECTION ASSOCIATION
NO	NORMALLY OPEN
NTS	NOT TO SCALE
OC	OUTPUT CONTACTOR
OL	OVERLOAD

ABBREVIATIONS, CONT.

PB	PULLBOX
PC	PHOTOCELL
PCC	POINT OF COMMON COUPLING
PE	PRESSURE ELEMENT
PIT	PRESSURE INDICATING TRANSMITTER
PLC	PROGRAMMABLE LOGIC CONTROLLER
PP	POWER PANEL
PST	PHASE SHIFTING TRANSFORMER
PT	POTENTIAL TRANSFORMER
PTT	PUSH TO TEST
RCS	REMOTE CONTROL STATION
RECP	RECEPTACLE
RIO	REMOTE I/O
RM	ROOM
RTD	RESISTANCE THERMAL DEVICE
RTU	REMOTE TELEMETRY UNIT
RVAT	REDUCED VOLTAGE AUTO TRANSFORMER
RVSS	REDUCED VOLTAGE SOLID STATE
SA	SUPPLY AIR
S.E.	SERVICE ENTRANCE
SP. C.	SPARE CONDUIT
SPD	SURGE PROTECTIVE DEVICE
SST	STAINLESS STEEL
TB	TEST BLOCK
TC	TIMED CLOSE
TO	TIMED OPEN
TSH	TWISTED SHIELDED
TX	TRANSFORMER
TYP	TYPICAL
UPS	UNINTERRUPTIBLE POWER SUPPLY
VFD	VARIABLE FREQUENCY DRIVE
WPCR	WEATHER PROOF CORROSION RESISTANT
WT	WALK THROUGH
XFMR	TRANSFORMER

NOTES:

1. UNLESS SPECIFICALLY NOTED OTHERWISE, ALL UNDERGROUND CONCRETE ENCASED ELECTRICAL CONDUITS SHALL BE PER STANDARD DETAIL 1611801.
2. THE INSTALLATION OF ALL CONCRETE ENCASED ELECTRICAL CONDUITS SHALL COMPLY WITH ACI 318, SECTION 6.3. CONTRACTOR SHALL SUPPLY EXPANSION JOINT FITTINGS AS REQUIRED FOR THERMAL EXPANSION AND DEFLECTION.
3. BOND ALL NEW CONCRETE ENCASED GROUND CONDUCTORS TO EXISTING GROUND CONDUCTORS IN ALL MANHOLES, PULL BOXES, CABLE TRAYS, AND SIMILAR LOCATIONS WHERE APPLICABLE.
4. UNLESS OTHERWISE SPECIFIED OR NOTED, ALL WALL MOUNTED ELECTRICAL PANELS, ENCLOSURES, AND SIMILAR EQUIPMENT SHALL BE MOUNTED 6'-6" (MAX) FROM THE TOP OF THE PANEL TO FINISHED FLOOR OR GRADE.
5. UNLESS OTHERWISE NOTED, ALL LIGHTING SWITCHES, CONTROL SWITCHES, AND SIMILAR EQUIPMENT SHALL BE MOUNTED WITH THEIR CENTERLINE APPROXIMATELY 4'-0" ABOVE FINISHED FLOOR, SLAB, OR GRADE.
6. A SEPARATE EQUIPMENT GROUNDING CONDUCTOR SHALL BE PROVIDED FOR EACH CIRCUIT (SEPARATE CONDUCTOR IN THE CONDUIT). THE CONDUCTOR SHALL BE TERMINATED AT THE PROPER DEVICE, TERMINAL, OR LUG AT THE POWER SOURCE (MCC GROUND BUS, PANELBOARD GROUND BUS, ETC.). GROUND CONDUCTOR SIZE SHALL BE PER THE LATEST EDITION OF THE NEC.
7. ELECTRICAL SYSTEMS INSTALLED IN HAZARDOUS LOCATIONS SHALL BE CONSTRUCTED IN ACCORDANCE WITH CHAPTER 5, ART. 500 OF THE LATEST EDITION OF THE NEC. CONTRACTOR SHALL SEAL ALL CONDUITS LEAVING HAZARDOUS AREAS. WALL AND FLOOR OPENINGS SHALL BE SEALED WITH FIREPROOF COMPOUND.
8. ALL EQUIPMENT LOCATED IN HAZARDOUS AREAS SHALL BE SUITABLE FOR THE CLASS, DIVISION, AND GROUP RATING OF THE LOCATION.
9. UNLESS SPECIFICALLY NOTED OTHERWISE, EXISTING PAVEMENT SHALL BE SAW CUT AND REMOVED TO ALLOW FOR THE INSTALLATION OF NEW ELECTRICAL DUCTBANKS. AFTER INSTALLATION, REPLACE PAVEMENT WITH NEW TO MATCH ORIGINAL CONDITIONS.
10. LIGHTNING PROTECTION SHALL BE PROVIDED FOR THE STRUCTURES INDICATED ON THE DRAWINGS AND IN ACCORDANCE WITH SECTION 16670.
11. REFERENCE SECTION 01520 FOR CONSTRUCTION SEQUENCING REQUIREMENTS.
12. CONDUIT HOMERUNS ARE NOT SHOWN ON DRAWINGS. CONTRACTOR SHALL REFER TO CONDUIT AND WIRE SCHEDULE, RISER DIAGRAMS, SINGLE LINE DIAGRAMS, AND OTHER DRAWINGS FOR CONDUIT AND WIRE REQUIREMENTS.
13. ALL ELECTRICAL COMPONENTS AND SYSTEMS AND NON-BUILDING STRUCTURES SHALL BE DESIGNED IN ACCORDANCE WITH THE SEISMIC PROVISIONS STIPULATED IN SECTION 9.6 OF ASCE 7-02/05 AND SECTIONS 1621 & 1622 OF IBC 2003/2006 AND SHALL HAVE AN IMPORTANCE FACTOR, I_p, OF 1.5.
14. ALL ELECTRICAL COMPONENTS AND SYSTEMS SHALL REQUIRE A CERTIFICATE OF COMPLIANCE IN ACCORDANCE WITH SECTION 9.6.3.6 OF ASCE 7-02/05.

REV	ISSUED FOR	DATE	BY

PROJECT ENGINEER: -
DESIGNED BY: F.A.M.
DRAWN BY: G.K.
CHECKED BY:
IF THIS BAR DOES NOT MEASURE 1" THEN DRAWING IS NOT TO FULL SCALE 0 1/2" 1"

J. BRAD PICKETT, PE NO. 74106

Hazen
HAZEN AND SAWYER
4000 HOLLYWOOD BOULEVARD, SUITE 750N
HOLLYWOOD, FLORIDA 33021
CERTIFICATE OF AUTHORIZATION NO. : 2771

CITY OF HALLANDALE BEACH

WATER TREATMENT PLANT
HIGH SERVICE PUMP REPLACEMENT

Hallandale Beach
PROSPERITY, INNOVATION, OPPORTUNITY

GENERAL NOTES AND ABBREVIATIONS

DATE: SEPTEMBER 2017
HAZEN NO.: 40621-000
CONTRACT NO.: 1
DRAWING NUMBER: E-02

50% SUBMITTAL

File: H:\40621-000 HALLANDALE HIGH SERVICE PUMPS\DRAWINGS\ELEC\E-02 Saved By CALLS Save Date: 2017/08/10 12:12 PM
PLOT DATE: 2017/08/11 11:12:32 AM BY: LAURA

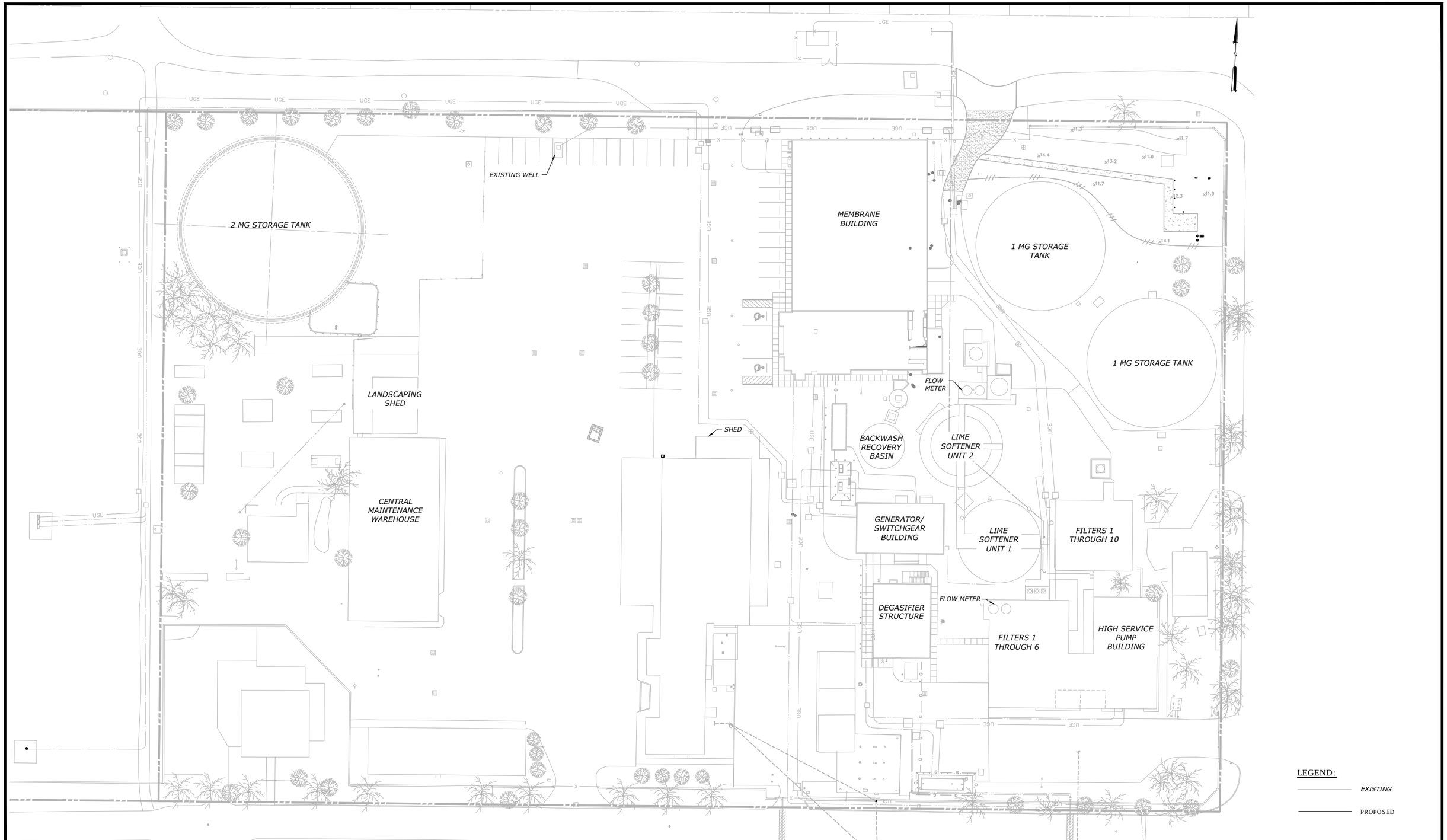

REV	ISSUED FOR	DATE	BY

PROJECT ENGINEER:	-
DESIGNED BY:	G.A.B.
DRAWN BY:	G.B.
CHECKED BY:	
IF THIS BAR DOES NOT MEASURE 1" THEN DRAWING IS NOT TO FULL SCALE	0 1/2" 1"

J. BRAD PICKETT, PE NO. 74106

Hazen

HAZEN AND SAWYER
4000 HOLLYWOOD BOULEVARD, SUITE 750N
HOLLYWOOD, FLORIDA 33021
CERTIFICATE OF AUTHORIZATION NO. : 2771

CITY OF HALLANDALE BEACH

WATER TREATMENT PLANT
HIGH SERVICE PUMP REPLACEMENT

Hallandale Beach
PROSPER, INNOVATION, OPPORTUNITY

OVERALL SITE PLAN

DATE:	SEPTEMBER 2017
HAZEN NO.:	40621-000
CONTRACT NO.:	1
DRAWING NUMBER:	E-03

50% SUBMITTAL

File: H:\40621-000 HALLANDALE HIGH SERVICE PUMPS\DRAWINGS\ELEC\E-03 Saved By CALLS Save Date: 2017/08/10 12:12 PM
PLOT DATE: 2017/08/11 11:12:43 AM BY: LAURA

File: H:\40621-000 HALLANDALE HIGH SERVICE PUMPS\DRAWINGS\ELEC\E-04 Saved By CALLS Save Date: 2017/08/11 9:05 AM
PLOT DATE: 2017/08/11 11:12:52 AM BY: LAURA

REV	ISSUED FOR	DATE	BY

PROJECT ENGINEER:	-
DESIGNED BY:	F.A.M.
DRAWN BY:	G.K.
CHECKED BY:	
IF THIS BAR DOES NOT MEASURE 1" THEN DRAWING IS NOT TO FULL SCALE	0 1/2" 1"

J. BRAD PICKETT, PE NO. 74106

Hazen

HAZEN AND SAWYER
4000 HOLLYWOOD BOULEVARD, SUITE 750N
HOLLYWOOD, FLORIDA 33021
CERTIFICATE OF AUTHORIZATION NO. : 2771

CITY OF HALLANDALE BEACH

WATER TREATMENT PLANT
HIGH SERVICE PUMP REPLACEMENT

Hallandale Beach
PROGRESS. INNOVATION. OPPORTUNITY

EXISTING ONE-LINE DIAGRAM

DATE:	SEPTEMBER 2017
HAZEN NO.:	40621-000
CONTRACT N0.:	1
DRAWING NUMBER:	E-04

50% SUBMITTAL

File: H:\40621-000 HALLANDALE HIGH SERVICE PUMPS\DRAWINGS\ELEC\E-05 Saved By CALLS Save Date: 2017/08/11 9:05 AM
PLOT DATE: 2017/08/11 11:15:01 AM BY: LAURA

REV	ISSUED FOR	DATE	BY

PROJECT ENGINEER:	-
DESIGNED BY:	F.A.M.
DRAWN BY:	G.K.
CHECKED BY:	
IF THIS BAR DOES NOT MEASURE 1" THEN DRAWING IS NOT TO FULL SCALE	0 1/2" 1"

J. BRAD PICKETT, PE NO. 74106

Hazen

HAZEN AND SAWYER
4000 HOLLYWOOD BOULEVARD, SUITE 750N
HOLLYWOOD, FLORIDA 33021
CERTIFICATE OF AUTHORIZATION NO. : 2771

CITY OF HALLANDALE BEACH

WATER TREATMENT PLANT
HIGH SERVICE PUMP REPLACEMENT

Hallandale Beach
PROGRESS. INNOVATION. OPPORTUNITY

PROPOSED ONE-LINE DIAGRAM

DATE:	SEPTEMBER 2017
HAZEN NO.:	40621-000
CONTRACT N0.:	1
DRAWING NUMBER:	E-05

50% SUBMITTAL

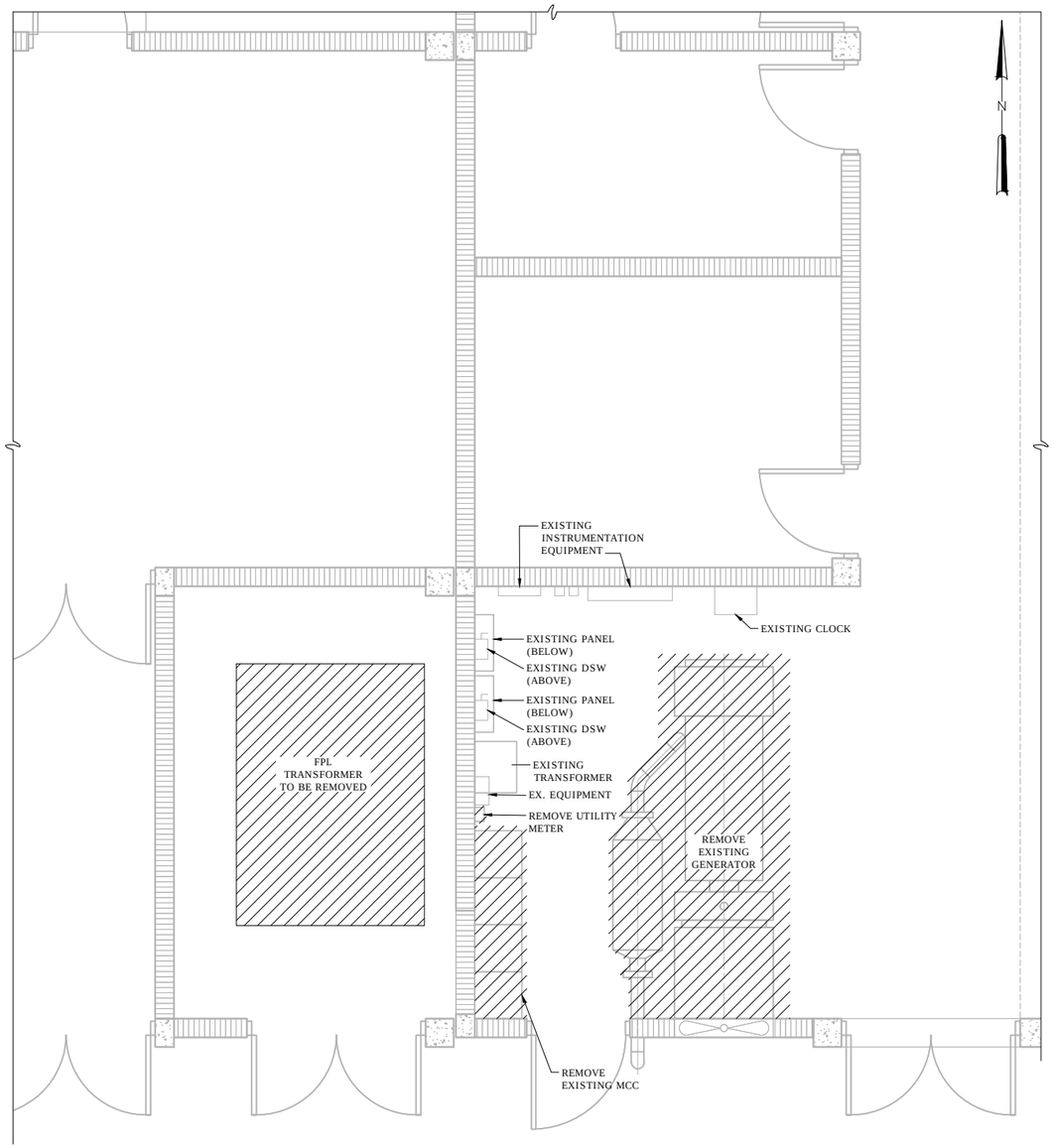

DEMOLITION PLAN

3/8" = 1'-0"

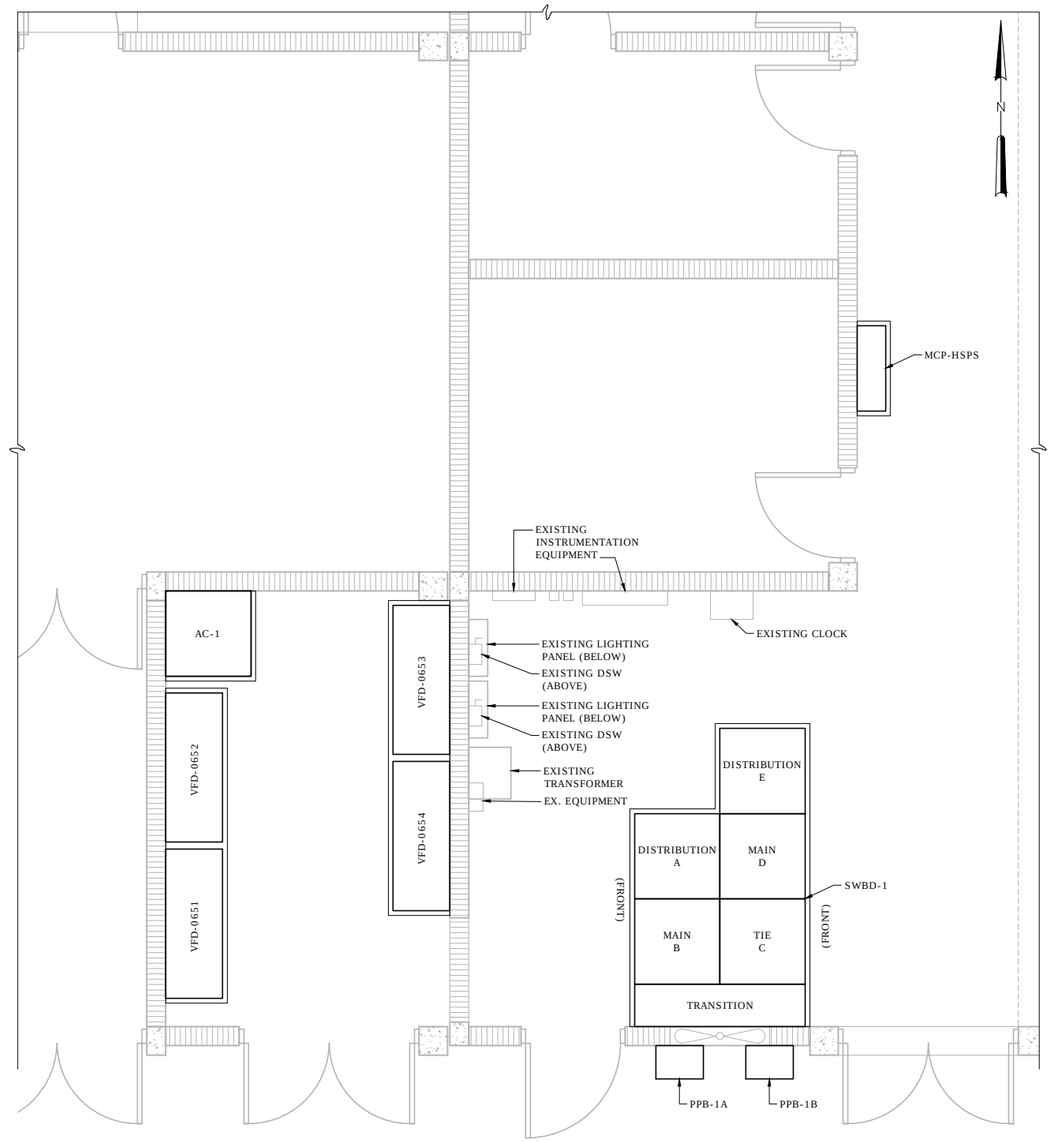

MODIFIED PLAN

3/8" = 1'-0"

LEGEND:

EXISTING

PROPOSED

3/8"=1'-0"

12" 0 1 2 4'

REV	ISSUED FOR	DATE	BY

PROJECT ENGINEER:	-
DESIGNED BY:	F.A.M.
DRAWN BY:	G.K.
CHECKED BY:	

IF THIS BAR DOES NOT MEASURE 1" THEN DRAWING IS NOT TO FULL SCALE 0 1/2" 1"

J. BRAD PICKETT, PE NO. 74106

Hazen

HAZEN AND SAWYER
4000 HOLLYWOOD BOULEVARD, SUITE 750N
HOLLYWOOD, FLORIDA 33021
CERTIFICATE OF AUTHORIZATION NO. : 2771

CITY OF HALLANDALE BEACH

WATER TREATMENT PLANT
HIGH SERVICE PUMP REPLACEMENT

Hallandale Beach
PRIDE-TY, INNOVATION, OPPORTUNITY

ELECTRICAL ROOM PLAN

DATE:	SEPTEMBER 2017
HAZEN NO.:	40621-000
CONTRACT NO.:	1
DRAWING NUMBER:	E-07

50% SUBMITTAL

File: H:\40621-000 HALLANDALE HIGH SERVICE PUMPS\DRAWINGS\ELECT\E-07 Saved By GALS Save Date: 2017/08/10 12:10 PM
PLOT DATE: 2017/08/11 11:13:24 AM BY: LAURA

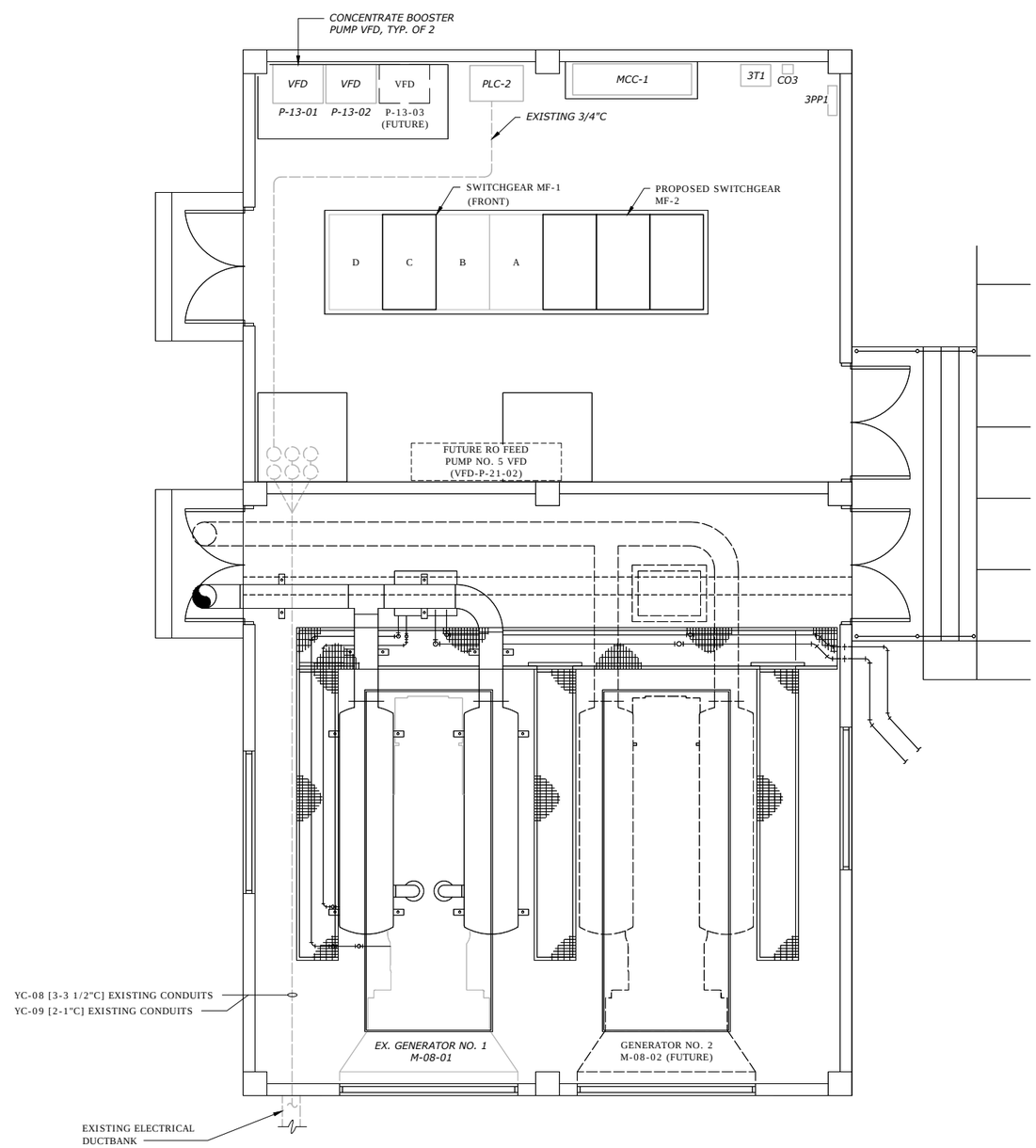

N

LEGEND:

- EXISTING
- PROPOSED
- FUTURE

1/4"=1'-0" 1 0 1 2 3 7'

REV	ISSUED FOR	DATE	BY

PROJECT ENGINEER:	-
DESIGNED BY:	F.A.M.
DRAWN BY:	G.K.
CHECKED BY:	
IF THIS BAR DOES NOT MEASURE 1" THEN DRAWING IS NOT TO FULL SCALE	0 1/2" 1"

J. BRAD PICKETT, PE NO. 74106

Hazen

HAZEN AND SAWYER
4000 HOLLYWOOD BOULEVARD, SUITE 750N
HOLLYWOOD, FLORIDA 33021
CERTIFICATE OF AUTHORIZATION NO. : 2771

CITY OF HALLANDALE BEACH

WATER TREATMENT PLANT
HIGH SERVICE PUMP REPLACEMENT

Hallandale Beach
PROSPERITY, INNOVATION, OPPORTUNITY

GENERATOR BUILDING

DATE:	SEPTEMBER 2017
HAZEN NO.:	40621-000
CONTRACT NO.:	1
DRAWING NUMBER:	E-08

50% SUBMITTAL

File: H:\40621-000 HALLANDALE HIGH SERVICE PUMPS\DRAWINGS\ELEC\E-08 Saved By CALLS Save Date: 2017/08/10 12:11 PM
PLOT DATE: 2017/08/11 11:13:36 AM BY: LAURA

PHOTO 1 - LS PLANT MCC-1

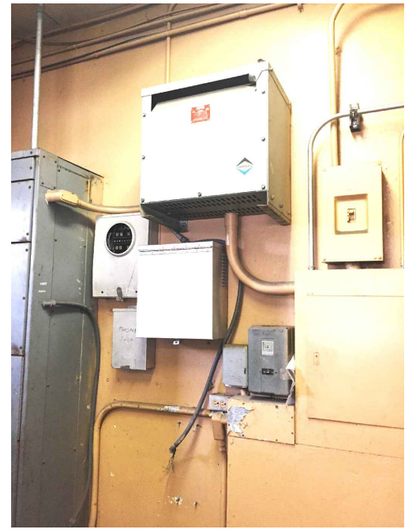

PHOTO 2 - XFMR AT LS PLANT MCC-1

PHOTO 3 - GENERATOR

PHOTO 4 - FPL TRANSFORMER ROOM

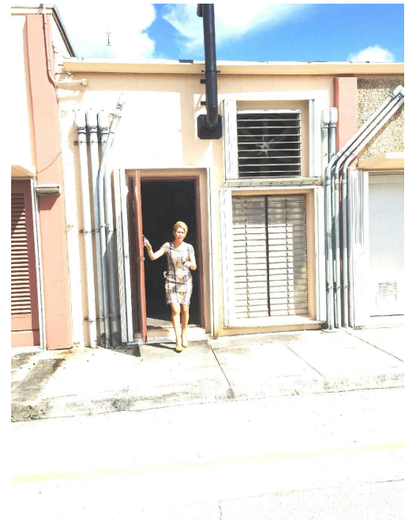

PHOTO 5 - ELECTRICAL CONDUIT

REV	ISSUED FOR	DATE	BY

PROJECT ENGINEER: -
DESIGNED BY: F.A.M.
DRAWN BY: G.K.
CHECKED BY:
IF THIS BAR DOES NOT MEASURE 1" THEN DRAWING IS NOT TO FULL SCALE 0 1/2" 1"

J. BRAD PICKETT, PE NO. 74106

Hazen
HAZEN AND SAWYER
4000 HOLLYWOOD BOULEVARD, SUITE 750N
HOLLYWOOD, FLORIDA 33021
CERTIFICATE OF AUTHORIZATION NO. : 2771

CITY OF HALLANDALE BEACH

WATER TREATMENT PLANT
HIGH SERVICE PUMP REPLACEMENT

Hallandale Beach
PROSPERITY, INNOVATION, OPPORTUNITY

ELECTRICAL DEMOLITION
PHOTOS

DATE: SEPTEMBER 2017
HAZEN NO.: 40621-000
CONTRACT NO.: 1
DRAWING NUMBER: E-09

50% SUBMITTAL

File: H:\40621-000 HALLANDALE HIGH SERVICE PUMPS\DRAWINGS\ELEC\E-09 Saved By CALL3 Save Date: 2017/08/11 9:13 AM
PLOT DATE: 2017/08/11 11:13:47 AM By: LAURA

PHOTO 5 - LS PLANT MCC-2

REV	ISSUED FOR	DATE	BY

PROJECT ENGINEER: -
DESIGNED BY: F.A.M.
DRAWN BY: G.K.
CHECKED BY:
IF THIS BAR DOES NOT MEASURE 1" THEN DRAWING IS NOT TO FULL SCALE 0 1/2" 1"

J. BRAD PICKETT, PE NO. 74106

Hazen
HAZEN AND SAWYER
4000 HOLLYWOOD BOULEVARD, SUITE 750N
HOLLYWOOD, FLORIDA 33021
CERTIFICATE OF AUTHORIZATION NO. : 2771

CITY OF HALLANDALE BEACH

WATER TREATMENT PLANT
HIGH SERVICE PUMP REPLACEMENT

Hallandale Beach
PROGRESS. INNOVATION. OPPORTUNITY

LIME PLANT MCC-2
MODIFICATION

DATE: SEPTEMBER 2017
HAZEN NO.: 40621-000
CONTRACT N0.: 1
DRAWING NUMBER: E-10

50% SUBMITTAL

File: H:\40621-000 HALLANDALE HIGH SERVICE PUMPS\DRAWINGS\ELEC\E-10 Saved By CALL3 Save Date: 2017/08/11 9:10 AM
PLOT DATE: 2017/08/11 11:12:17 AM BY: LAURA

INSTRUMENT AND FUNCTION SYMBOLS

LOCATION AND ACCESSIBILITY	SHARED DISPLAY/SHARED CONTROL: PRIMARY CHOICE OR BASIC PROCESS CONTROL SYSTEM	SHARED DISPLAY/SHARED CONTROL: ALTERNATE CHOICE OR SAFETY INSTRUMENTED SYSTEM	COMPUTER SYSTEMS AND SOFTWARE	DISCRETE
- LOCATED IN FIELD - NOT PANEL, CABINET, OR CONSOLE MOUNTED - VISIBLE AT FIELD LOCATION - NORMALLY OPERATOR ACCESSIBLE	ABCD 12345	ABCD 12345	ABCD 12345	ABCD 12345
- LOCATED IN OR ON FRONT OF CENTRAL OR MAIN PANEL OR CONSOLE - VISIBLE ON FRONT OF PANEL OR ON VIDEO DISPLAY - NORMALLY OPERATOR ACCESSIBLE AT PANEL FRONT OR CONSOLE	ABCD 12345	ABCD 12345	ABCD 12345	ABCD 12345
- LOCATED IN REAR OF CENTRAL OR MAIN PANEL - LOCATED IN CABINET BEHIND PANEL - NOT VISIBLE ON FRONT OF PANEL OR ON VIDEO DISPLAY - NOT NORMALLY OPERATOR ACCESSIBLE AT PANEL OR CONSOLE	ABCD 12345	ABCD 12345	ABCD 12345	ABCD 12345
- LOCATED IN OR ON FRONT OF SECONDARY OR LOCAL PANEL OR CONSOLE - VISIBLE ON FRONT OF PANEL OR ON VIDEO DISPLAY - NORMALLY OPERATOR ACCESSIBLE AT PANEL FRONT OR CONSOLE	ABCD 12345	ABCD 12345	ABCD 12345	ABCD 12345
- LOCATED IN REAR OF SECONDARY OR LOCAL PANEL - LOCATED IN FIELD CABINET - NOT NORMALLY OPERATOR ACCESSIBLE AT PANEL OR CONSOLE	ABCD 12345	ABCD 12345	ABCD 12345	ABCD 12345

X — SUFFIX (X) TO DIFFERENTIATE BETWEEN INSTRUMENTS AND FUNCTIONS THAT WOULD OTHERWISE HAVE THE SAME IDENTIFICATION.

SINGLE INSTRUMENT OR OTHER COMPONENT HAVING MULTIPLE FUNCTIONS OR SHARING A COMMON HOUSING

(ZZZ) — DESIGNATIONS OF CONTROL FUNCTIONS (ZZZ) ASSOCIATED WITH INSTRUMENT OR OTHER COMPONENTS.

AHC -	AUTO/HOLD/CLOSE	OC -	OPEN/CLOSE
AM -	AUTO/MANUAL	OSC -	OPEN/STOP/CLOSED
CALC -	CALCULATION	POT -	POTENTIOMETER
DEV -	DEVIATION	RL -	RAISE/LOWER
MOA -	MANUAL/OFF/AUTO	RS -	RUN/STOP
HOR -	HAND/OFF/REMOTE	RSL -	RAISE/STOP/LOWER
LOS -	LOCKOUT STOP	SD -	SHUTDOWN
LR -	LOCAL/REMOTE	SEL -	SELECT
LSR -	LOCAL/STOP/REMOTE	SP -	SET POINT
00 -	ON / OFF	SR -	START/RESET
		SS -	STOP/START

ABCD 12345 — INSTRUMENT WITH COMPUTING OR CONVERTING FUNCTION

ABCD 12345 — CONTROL SYSTEM COMPUTING FUNCTION

CONVERT

E - VOLTAGE	H - HYDRAULIC
I - CURRENT	O - ELECTROMAGNETIC, SONIC
P - PNEUMATIC	R - RESISTANCE (ELECT.)
A - ANALOG	D - DIGITAL
B - BINARY	

COMPUTE

SUMMING	PROPORTIONAL	DIFFERENCE
SUBTRACTOR	DERIVATIVE	HIGH SELECTING
MULTIPLYING	AVERAGING	LOW SELECTING
DIVIDING	RATIO	INTEGRAL
ROOT EXTRACTION	PID	COMPLEX FUNCTION

= 1, 2, 3, etc.
REFER TO NOTE ON SAME SHEET FOR BRIEF DESCRIPTION

* — ELECTRICAL CONTROL INTERLOCK

\# — COMPLEX INTERLOCK
= 1, 2, 3, etc.
REFER TO NOTE ON SAME SHEET FOR BRIEF DESCRIPTION

AND — AND LOGIC

OR — OR LOGIC

ABCD 1234 — PILOT LIGHT

VALVE, GATE, AND ACTUATOR SYMBOLS

GATE VALVE
PLUG VALVE
GLOBE VALVE
BALL VALVE
BUTTERFLY VALVE
BALL CHECK VALVE
SWING CHECK VALVE
CHECK VALVE
3-WAY VALVE
3-WAY BALL VALVE
DIAPHRAGM VALVE
PINCH VALVE
NEEDLE VALVE
SLUICE GATE
STOP/SLIDE GATE
SOLENOID ACTUATOR
PNEUMATIC ACTUATOR

BACKFLOW PREVENTER
PRESSURE RELIEF VALVE
VACUUM RELIEF VALVE
COMBINATION VACUUM AND PRESSURE RELIEF VALVE
PRESSURE-REDUCING REGULATOR
BACKPRESSURE REGULATOR
AIR RELEASE VALVE
ROTARY MOTOR
ELECTROHYDRAULIC ACTUATOR
MANUAL ACTUATOR

PUMP AND EQUIPMENT SYMBOLS

CENTRIFUGAL WET PIT PUMP (OR DRY-PIT SUBMERSIBLE)
BLOWER (CENTRIFUGAL)
GEAR PUMP OR BLOWER (POSITIVE DISPLACEMENT)
CHOPPER PUMP
PISTON PUMP
DIAPHRAGM PUMP
ROTARY LOBE PUMP OR BLOWER (POSITIVE DISPLACEMENT)
METERING PUMP
COMPRESSOR
PROGRESSIVE CAVITY PUMP
VERTICAL PUMP
INLINE GRINDER
CENTRIFUGAL PUMP
SCREW CENTRIFUGAL PUMP
MIXER

IDENTIFICATION LETTERS

	FIRST LETTERS: MEASURED OR INITIATING VARIABLE	FIRST LETTERS: VARIABLE MODIFIER	SUCCEEDING LETTERS: READOUT/ PASSIVE FUNCTION	SUCCEEDING LETTERS: OUTPUT/ ACTIVE FUNCTION	SUCCEEDING LETTERS: FUNCTION MODIFIER
A	ANALYSIS		ALARM		
B	BURNER, COMBUSTION		USER'S CHOICE	USER'S CHOICE	USER'S CHOICE
C	CONDUCTIVITY			CONTROL	CLOSE
D	DENSITY (MASS) OR SPECIFIC	DIFFERENCE, DIFFERENTIAL			DEVIATION
E	GRAVITY VOLTAGE (EMF)		SENSOR, PRIMARY ELEMENT		
F	FLOW, FLOW RATE	RATIO			
G	USER'S CHOICE		GLASS, GAUGE, VIEWING DEVICE		
H	HAND				HIGH
I	CURRENT		INDICATE		
J	POWER		SCAN		
K	TIME, SCHEDULE	TIME RATE OF CHANGE		CONTROL STATION	
L	LEVEL		LIGHT		LOW
M	MOISTURE OR HUMIDITY	MOMENTARY			MIDDLE, INTERMEDIATE
N	TORQUE		USER'S CHOICE	USER'S CHOICE	USER'S CHOICE
O	USER'S CHOICE		ORIFICE, RESTRICTION		OPEN
P	PRESSURE		POINT (TEST CONNECTION)		
Q	QUANTITY	INTEGRATE, TOTALIZE	INTEGRATE, TOTALIZE		
R	RADIATION		RECORD		RUN
S	SPEED, FREQUENCY	SAFETY		SWITCH	STOP
T	TEMPERATURE			TRANSMIT	
U	MULTIVARIABLE		MULTIFUNCTION	MULTIFUNCTION	
V	VIBRATION, MECHANICAL ANALYSIS			VALVE, DAMPER, LOUVER	
W	WEIGHT, FORCE		WELL PROBE		
X	UNCLASSIFIED	X-AXIS	ACCESSORY DEVICES, UNCLASSIFIED	UNCLASSIFIED	UNCLASSIFIED
Y	EVENT, STATE, PRESENCE	Y-AXIS		AUXILIARY DEVICES	
Z	POSITION, DIMENSION	Z-AXIS, SAFETY INSTRUMENTED SYSTEM		DRIVER, ACTUATOR, UNCLASSIFIED FINAL CONTROL ELEMENT	

MISCELLANEOUS SYMBOLS

EXPANSION JOINT
QUICK CONNECT
BLIND FLANGE
FLEXIBLE HOSE
CALIBRATION CYLINDER
PULSATION DAMPENER
EXPANSION TANK
HORN
HORN/STROBE
RUPTURE DISK
VENT
DIAPHRAGM SEAL
FULL LINE OR TAPPED RING SEAL
DRAIN
XXXX-YYYYY — EQUIPMENT OR PANEL TAG
MOTOR
FILTER
AIR FILTER
STATIC MIXER
INJECTOR

PRIMARY ELEMENT SYMBOLS

MAGNETIC FLOW METER
SONIC FLOW METER
THERMAL MASS FLOW METER
TURBINE OR PROPELLER FLOW METER
VENTURI FLOW METER
AVERAGING PITOT TUBE
VORTEX FLOW METER
POSITIVE DISPLACEMENT FLOW METER
PARSHALL FLUME
WEIR
ORIFICE PLATE
FICV — ROTAMETER WITH INTEGRAL VALVE
XX — XX: RF=ADMITTANCE/CAPACITANCE MAN=MANOMETER
ULTRASONIC LEVEL SENSOR
SUBMERSIBLE LEVEL SENSOR
NON-CONTACT RADAR LEVEL SENSOR
GUIDED WAVE RADAR LEVEL SENSOR
FLOAT LEVEL SWITCH
CAPACITANCE LEVEL SENSOR

ANALYTICAL ABBREVIATIONS

AXX 12345 (ZZZ) — ANALYSIS INSTRUMENT

(ZZZ) = ALK - ALKALINITY
CH4 - METHANE
CL2 - CHLORINE
COMB - COMBUSTIBLE GAS
CON - CONDUCTIVITY
DO - DISSOLVED OXYGEN
IR - INFRARED
H2S - HYDROGEN SULFIDE
LEL - LOWER EXPLOSIVE LIMIT
METH - METHANOL VAPOR
NH3 - AMMONIA
NO3 - NITRATE
O2 - OXYGEN
O3 - OZONE
ORP - OXIDATION/REDUCTION POTENTIAL
PETRO - PETROLEUM VAPOR
PH - HYDROGEN ION CONCENTRATION
PO4 - PHOSPHATE
SO2 - SULFUR DIOXIDE
TH - TOTAL HARDNESS
TSS - TOTAL SUSPENDED SOLIDS
TURB - TURBIDITY
UV - ULTRAVIOLET

GENERAL NOTES

1. SYMBOLS AND NOMENCLATURE ARE BASED ON ANSI/ISA-5.1-2009.
2. REFER TO LEGEND SHEETS OF OTHER DISCIPLINES FOR ADDITIONAL SYMBOLS AND ABBREVIATIONS.
3. REFER TO SPECIFICATIONS FOR ADDITIONAL DETAIL ON CONTROL SYSTEM FUNCTIONAL REQUIREMENTS.
4. INSTRUMENTS AND PANELS DENOTED WITH AN ASTERISK (*) ARE PROVIDED BY OTHER DISCIPLINES. REFER TO THE DRAWINGS AND SPECIFICATIONS OF OTHER DISCIPLINES FOR ADDITIONAL DETAIL.
5. POWER SUPPLIES FOR LOOPS OR SYSTEMS SHALL BE FURNISHED BY THE INSTRUMENTATION SUPPLIER TO MEET THE PARTICULAR CHARACTERISTICS (E.G., VOLTAGE AND CURRENT REQUIREMENTS) OF COMPONENTS IN EACH LOOP OR SYSTEM.

LINE SYMBOLS AND LEGEND

MAJOR PROCESS PIPES OR CHANNELS
SECONDARY PROCESS OR MECHANICAL CONNECTION
AIR SUPPLY OR SIGNAL
ELECTRICAL SIGNAL/ COPPER CABLE
DATA LINK OR INTERNAL SOFTWARE LINK
FO — FIBER OPTIC CABLE
C6 — CAT6 CABLE
PROCESS/SIGNALS NOT CONNECTED (CROSSING)
PROCESS/SIGNALS CONNECTED
TAG / DRAWING — OFF-SHEET CONNECTOR
DISCRETE ELECTRICAL SIGNALS
DISCRETE DIGITAL SIGNALS
ANALOG ELECTRICAL SIGNALS
ANALOG DIGITAL SIGNALS

REV	ISSUED FOR	DATE	BY

PROJECT ENGINEER: -
DESIGNED BY: K.R.D.
DRAWN BY: K.R.D.
CHECKED BY:
IF THIS BAR DOES NOT MEASURE 1" THEN DRAWING IS NOT TO FULL SCALE — 0 1/2" 1"

KEITH R. DINNEN
NO. 78757

Hazen
HAZEN AND SAWYER
4000 HOLLYWOOD BOULEVARD, SUITE 750N
HOLLYWOOD, FLORIDA 33021
CERTIFICATE OF AUTHORIZATION NO. : 2771

CITY OF HALLANDALE BEACH
WATER TREATMENT PLANT
HIGH SERVICE PUMP REPLACEMENT

Hallandale Beach — PROGRESS. INNOVATION. OPPORTUNITY

INSTRUMENTATION SYMBOLS AND LEGEND

DATE: SEPTEMBER 2017
HAZEN NO.: 40621-000
CONTRACT N0.: 1
DRAWING NUMBER: I-01

50% SUBMITTAL

File: H:\40621-000 HALLANDALE HIGH SERVICE PUMPS\DRAWINGS\MEST\I-01 Saved By LAURA Save Date: 2017/08/11 11:28 AM
PLOT DATE: 2017/08/11 11:33:45 AM BY: LAURA

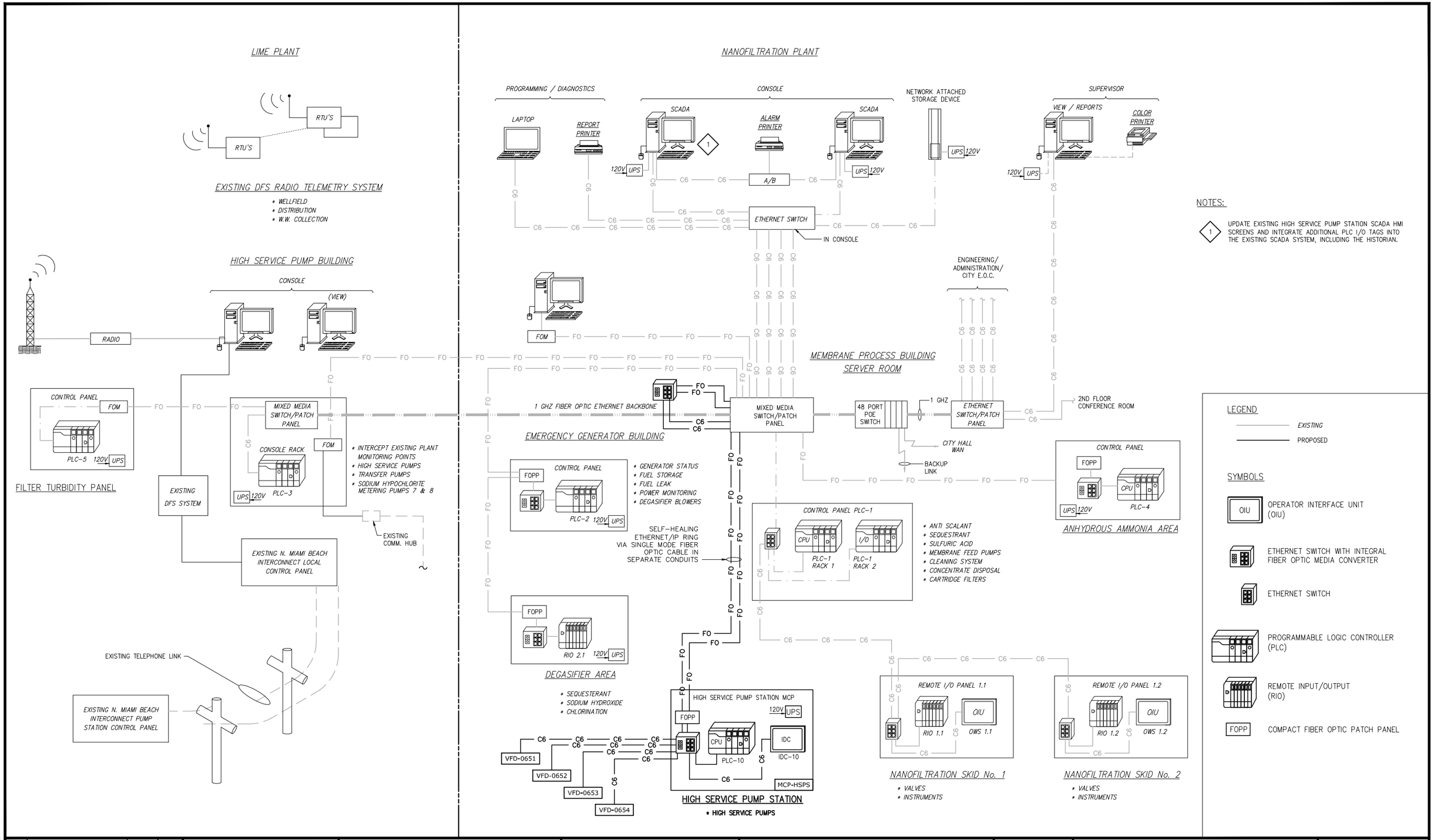

REV	ISSUED FOR	DATE	BY

PROJECT ENGINEER: -
DESIGNED BY: K.R.D.
DRAWN BY: K.R.D.
CHECKED BY:
IF THIS BAR DOES NOT MEASURE 1" THEN DRAWING IS NOT TO FULL SCALE 0 1/2" 1"

KEITH R. DINNEN
NO. 78757

Hazen
HAZEN AND SAWYER
4000 HOLLYWOOD BOULEVARD, SUITE 750N
HOLLYWOOD, FLORIDA 33021
CERTIFICATE OF AUTHORIZATION NO. : 2771

CITY OF HALLANDALE BEACH

WATER TREATMENT PLANT
HIGH SERVICE PUMP REPLACEMENT

Hallandale Beach
PROGRESS. INNOVATION. OPPORTUNITY

SCADA NETWORK DIAGRAM

DATE: SEPTEMBER 2017
HAZEN NO.: 40621-000
CONTRACT NO.: 1
DRAWING NUMBER: I-02

50% SUBMITTAL

File: H:\40621-000 HALLANDALE HIGH SERVICE PUMPS\DRAWINGS\INSTU-02 Saved By LAURA Save Date: 2017/09/11 11:28 AM
PLOT DATE: 2017/09/11 11:35:47 AM BY: LAURA

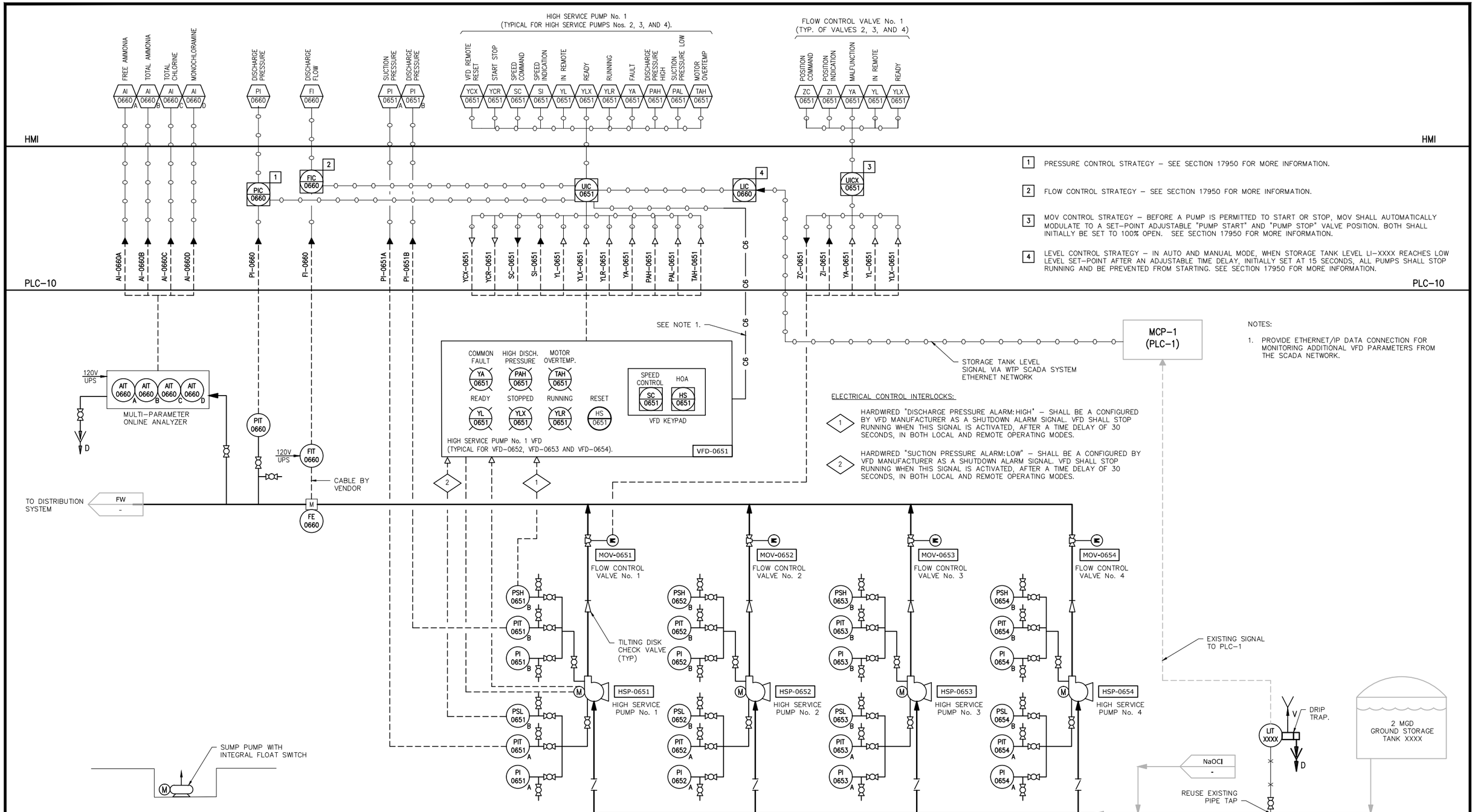

REV	ISSUED FOR	DATE	BY

PROJECT ENGINEER: -
DESIGNED BY: K.R.D.
DRAWN BY: K.R.D.
CHECKED BY:
IF THIS BAR DOES NOT MEASURE 1" THEN DRAWING IS NOT TO FULL SCALE 0 1/2" 1"

KEITH R. DINNEN
NO. 78757

Hazen
HAZEN AND SAWYER
4000 HOLLYWOOD BOULEVARD, SUITE 750N
HOLLYWOOD, FLORIDA 33021
CERTIFICATE OF AUTHORIZATION NO. : 2771

CITY OF HALLANDALE BEACH

WATER TREATMENT PLANT
HIGH SERVICE PUMP REPLACEMENT

Hallandale Beach
PROGRESS. INNOVATION. OPPORTUNITY

HIGH SERVICE PUMP STATION
P&ID

DATE: SEPTEMBER 2017
HAZEN NO.: 40621-000
CONTRACT NO.: 1
DRAWING NUMBER: I-03

50% SUBMITTAL

File: H:\40621-000 HALLANDALE HIGH SERVICE PUMPS\DRAWINGS\INSTU-03 Saved By LAURA Save Date: 2017/09/11 11:28 AM
PLOT DATE: 2017/09/11 11:35:48 AM BY: LAURA

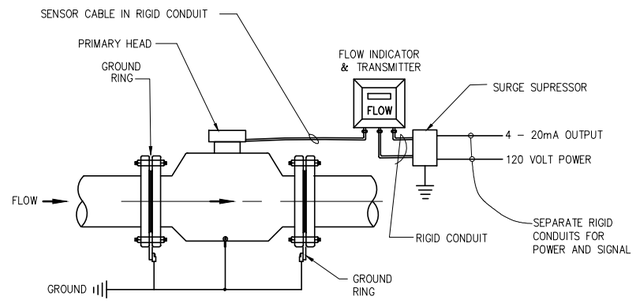

NOTE:
STRAIGHT INLET RUN MINIMUM OF 5x DIAMETER AND OUTLET RUN MINIMUM OF 2x DIAMETER
FOLLOW MANUFACTURER'S INSTALLAION INSTRUCTIONS

MAGNETIC FLOW METER

DETAIL STD
N.T.S. –

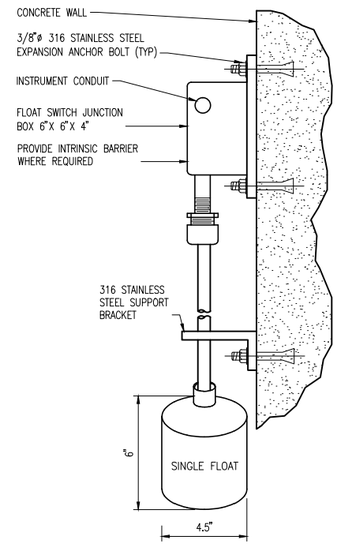

SLIDING FLOAT SWITCH

DETAIL STD
N.T.S. –

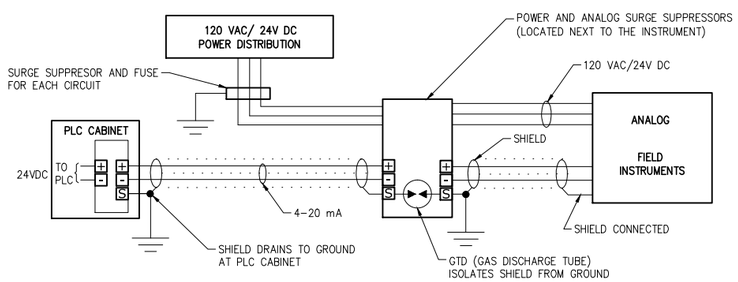

4–WIRE FIELD TRANSMITTERS (AC AND DC)

DETAIL STD
N.T.S. –

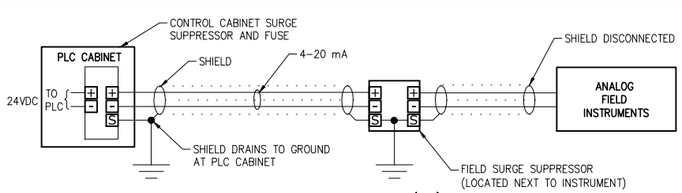

2–WIRE FIELD TRANSMITTERS (DC)

DETAIL STD
N.T.S. –

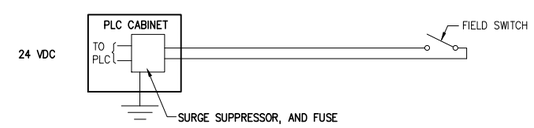

DISCRETE PLC/INPUT CIRCUIT

DETAIL STD
N.T.S. –

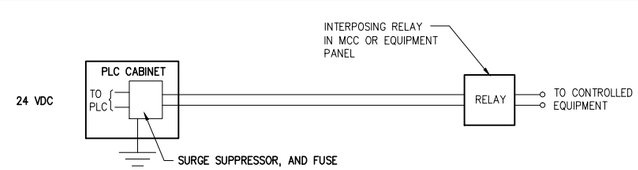

DISCRETE PLC/OUTPUT CIRCUIT

DETAIL STD
N.T.S. –

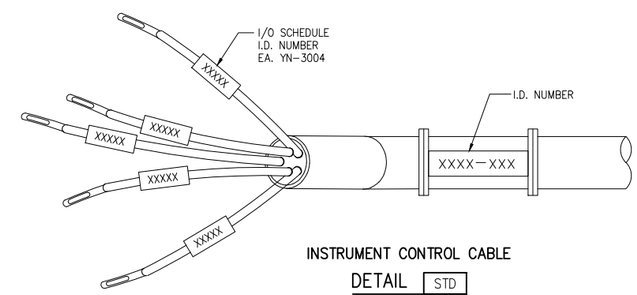

INSTRUMENT CONTROL CABINET

DETAIL STD
N.T.S. –

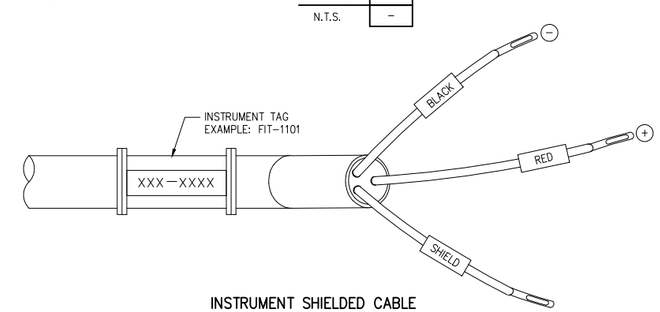

INSTRUMENT SHIELDED CABLE

DETAIL STD
N.T.S. –

REV	ISSUED FOR	DATE	BY

PROJECT ENGINEER:	-
DESIGNED BY:	K.R.D.
DRAWN BY:	K.R.D.
CHECKED BY:	
IF THIS BAR DOES NOT MEASURE 1" THEN DRAWING IS NOT TO FULL SCALE	0 1/2" 1"

KEITH R. DINNEN
NO. 78757

Hazen

HAZEN AND SAWYER
4000 HOLLYWOOD BOULEVARD, SUITE 750N
HOLLYWOOD, FLORIDA 33021
CERTIFICATE OF AUTHORIZATION NO. : 2771

CITY OF HALLANDALE BEACH

WATER TREATMENT PLANT
HIGH SERVICE PUMP REPLACEMENT

Hallandale Beach
PROGRESS. INNOVATION. OPPORTUNITY

INSTRUMENTATION DETAILS

DATE:	SEPTEMBER 2017
HAZEN NO.:	40621-000
CONTRACT N0.:	1
DRAWING NUMBER:	I-04

50% SUBMITTAL

File: H:\40621-000 HALLANDALE HIGH SERVICE PUMPS\DRAWINGS\INSTU-04 Saved By LAURA Save Date: 2017/09/11 11:26 AM
PLOT DATE: 2017/09/11 11:35:50 AM BY: LAURA

HVAC GENERAL NOTES

1. DESIGN IS IN ACCORDANCE WITH AND CONSTRUCTION SHALL COMPLY WITH THE PROVISIONS OF THE FLORIDA BUILDING CODE 5TH EDITION (2014).
2. EQUIPMENT SIZES AND LOCATIONS ARE APPROXIMATE. ACTUAL DIMENSIONS TO BE DETERMINED BY EQUIPMENT FURNISHED. COORDINATE HVAC WORK WITH THE WORK OF ALL OTHER TRADES.
3. FINAL OPENING DIMENSIONS, CONCRETE PAD SIZES, AND LOCATIONS MUST BE COORDINATED DURING CONSTRUCTION WITH ACCEPTED SHOP DRAWINGS.
4. FINAL SIZES OF FLOOR/ROOF/WALL OPENINGS, DUCT PLENUMS, TRANSITIONS AND PIPING CONNECTIONS TO ALL EQUIPMENT SHALL BE DETERMINED BY EQUIPMENT FURNISHED.
5. THE DRAWINGS ARE SCHEMATIC IN NATURE AND SHOW INTENDED GENERAL LOCATION OF HVAC EQUIPMENT AND SYSTEMS. NOT ALL OFFSETS AND REQUIRED FITTINGS FOR ACTUAL FIELD INSTALLATION ARE INTENDED TO BE SHOWN FOR INSTALLATION OF SYSTEMS IN THE SPACE AVAILABLE IN CONSIDERATION OF WORK OF OTHER TRADES AND FIELD CONDITIONS. CONTRACTOR SHALL PROVIDE ADDITIONAL OFFSETS IN DUCTWORK AND PIPING AS REQUIRED TO AVOID SUCH INTERFERENCES OR FIELD CONDITIONS AT NO ADDITIONAL COST TO THE ORIGINAL CONTRACT AMOUNT.
6. COORDINATE THE REQUIREMENTS FOR HVAC OPENINGS AND SLEEVES IN BUILDING ELEMENTS WITH THE GENERAL CONTRACTOR.
7. CONTRACTOR SHALL REFER TO SPECIFICATION SECTION 09900 FOR PAINTING REQUIREMENTS UNLESS OTHERWISE NOTED.
8. REFER TO ELECTRICAL DRAWINGS OR SPECIFICATIONS FOR INTERLOCKING WIRING REQUIREMENTS.
9. PROVIDE ADEQUATE SUPPORT, PER THE MANUFACTURER'S RECOMMENDATIONS, FOR ALL HVAC EQUIPMENT.
10. CONTRACTOR SHALL BE RESPONSIBLE FOR CHECKING ELECTRICAL RATINGS FROM CERTIFIED DRAWINGS OF EQUIPMENT AND SHALL MAKE ANY BRANCH CIRCUIT DISTRIBUTION MODIFICATION REQUIREMENTS WITHOUT ANY ADDITIONAL COST TO OWNER. THE CONTRACTOR SHALL SUBMIT A SCHEDULE OF SUCH CHANGES FOR APPROVAL BY ENGINEER.
11. WHEREVER THE REQUIREMENTS AND REGULATIONS OF STATE, FEDERAL AND LOCAL AUTHORITIES HAVING JURISDICTION DIFFER FROM THE DRAWINGS OR SPECIFICATIONS, THEY SHALL TAKE PRECEDENCE AND SHALL BE MADE PART OF THE CONTRACT (EXCEPT WHERE THE DRAWINGS OR SPECIFICATIONS ARE MORE STRINGENT).
12. THERMOSTATS, SENSORS, AND/OR CONTROL PANEL LOCATIONS SHOWN ARE APPROXIMATE AND SHALL BE COORDINATED TO SUIT FIELD CONDITIONS.
13. INSTALL WALL MTD SENSORS, CONTROLS AND THERMOSTATS 4'-0" ABOVE FINISHED FLOOR UNLESS OTHERWISE NOTED. ALIGN WITH OTHER NEARBY ITEMS SUCH AS LIGHT SWITCHES. DO NOT INSTALL CLOSER THAN 6-INCHES FROM EDGE OF DOOR FRAME OR CORNER OF WALL. WHERE CONFLICTS MAY OCCUR WITH ITEMS SUCH AS LIGHT SWITCHES, MOUNT THE SENSOR OR CONTROL DEVICE 4'-6" ABOVE FINISHED FLOOR CENTERED ABOVE THE LIGHT SWITCH.
14. COORDINATE THE LOCATIONS OF HVAC ITEMS EXPOSED IN FINISHED SPACES WITH ARCHITECTURAL FEATURES INDICATED ON THE DRAWINGS.
15. PROVIDE ADEQUATE MEANS OF ACCESS CLEARANCE FOR ALL HVAC/MECHANICAL EQUIPMENT AND SYSTEMS THAT REQUIRE ACCESS FOR PROPER OPERATION, MAINTENANCE AND REPAIR PER RECOMMENDED MANUFACTURER CLEARANCES.
16. HVAC CONTRACTOR SHALL PROVIDE ALL FIRE STOPPING AND PIPE SLEEVES FOR ALL PIPE AND DUCT PENETRATIONS THRU FIRE RATED BUILDING ASSEMBLIES.
17. CONTRACTOR SHALL OBTAIN AND PAY ALL FEES RELATED TO PERMITTING, AND INSPECTIONS.
18. FOR ADDITIONAL REQUIREMENTS SEE SPECIFICATIONS.

FAN SCHEDULE

PARAMETER	HIGH SERVICE PUMP STATION	HIGH SERVICE PUMP STATION
EQUIPMENT ID	FAN-5611	FAN-5612
AREA SERVED	HIGH SERVICE PUMP ROOM	HIGH SERVICE PUMP ROOM
SERVICE	DUTY	BACKUP
LOCATION	ROOF	ROOF
DUTY	EXHAUST	EXHAUST
FAN TYPE	CENTRIFUGAL UP-BLAST	CENTRIFUGAL UP-BLAST
SPECIAL REQUIREMENTS	HIGH WIND RATED	HIGH WIND RATED
DRIVE TYPE	BELT DRIVE	BELT DRIVE
FAN SPEED	733 RPM	733 RPM
AIR QUANTITY	11,000 CFM	11,000 CFM
APPROX. AIR CHANGES PER HOUR	18	18
TOTAL STATIC PRESSURE	0.38" WG	0.38" WG
SOUND	21 SONES	21 SONES
FAN MOTOR	4 HP	4 HP
MAXIMUM BREAK HORSEPOWER	3 BHP	3 BHP
MOTOR TYPE	TEFC	TEFC
ELECTRICAL	460V / 3P / 60HZ	460V / 3P / 60HZ
MANUFACTURER	GREENHECK	GREENHECK
MODEL NUMBER	CUBE-300	CUBE-300
ROOF OPENING	32.5" X 32.5"	32.5" X 32.5"
WEIGHT	300	300
FAN CONTROL	HOA	HOA
BACKDRAFT DAMPER	30" X 30"	30" X 30"
BACKDRAFT DAMPER TYPE	GRAVITY	GRAVITY

FAN SCHEDULE NOTES:

1. PROVIDE COMBINATION DISCONNECT SWITCH/STARTER, SUPPLIED BY ELECTRICAL CONTRACTOR, COORDINATED BY VENTILATION CONTRACTOR.
2. PROVIDE PREMIUM EFFICIENCY TEFC ELECTRIC MOTOR WITH THERMAL OVERLOADS. ELECTRIC MOTOR WITH 1.5 SERVICE FACTOR.
3. FAN SHALL COMPLY WITH UL-705 "STANDARD FOR POWER VENTILATORS".
4. HEAVY GAUGE ALUMINUM HOUSING, BACKWARD INCLINED ALUMINUM, WITH SERVICE SWITCH NEMA 3R TOGGLE - JUNCTION BOX FACTORY MOUNTED AND WIRED, ENTIRE FAN AND HOUSING ASSEMBLY AND ACCESSORIES AND ROOF CURB WITH "HI-PRO" POLYESTER COATING - COLOR GRAY FOR ENTIRE FAN ASSEMBLY AND FACTORY MOUNTED ACCESSORIES, VARIABLE DRIVE ADJUSTABLE PULLEYS, ALUMINUM BIRD SCREEN, 24-INCH HIGH WIND RATED FACTORY ROOF CURB, BEARINGS WITH GREASE FITTINGS, AND LIFTING LUGS.
5. FAN SHALL BE AMCA SOUND AND AIR PERFORMANCE LABELED.
6. FAN AND ROOF CURBS SHALL HAVE MIAMI-DADE NOTICE OF ACCEPTANCE (NOA) PRODUCT APPROVALS. SUBMIT NOA WITH SHOP DRAWING.
7. ENTIRE FAN AND CURB ASSEMBLY SHALL BE DESIGNED TO COMPLY WITH THE FLORIDA BUILDING CODE TO WITHSTAND WIND LOADING BASED ON ASCE-7 DESIGN CRITERIA FOR WORST CASE CONDITIONS IN FLORIDA. SUBMIT SHOP DRAWINGS FOR PERMIT AND REVIEW SIGNED AND SEALED BY THE CONTRACTOR'S FLORIDA REGISTERED PROFESSIONAL ENGINEER.
8. FAN AND CURB SHALL BE INSTALLED IN COMPLIANCE WITH MIAMI-DADE NOTICE OF ACCEPTANCE AND SHOP DRAWINGS.
9. FANS SHALL BE CONTROLLED BY A HAND-OFF-AUTO SWITCH. IN THE "HAND" POSITION, THE FAN SHALL RUN CONTINUOUSLY. IN THE "OFF" POSITION, THE FAN WILL NOT RUN. IN THE "AUTO" POSITION, THE FAN SHALL BE CONTROLLED BY A THERMOSTAT.
10. FACTORY SUPPLIED GRAVITY TYPE BACKDRAFT DAMPER, FIELD MOUNTED.

REV	ISSUED FOR	DATE	BY

PROJECT ENGINEER: -
DESIGNED BY: F.A.M.
DRAWN BY: L.M.S.
CHECKED BY:
IF THIS BAR DOES NOT MEASURE 1" THEN DRAWING IS NOT TO FULL SCALE 0 1/2" 1"

GEORGE A. BROWN, PE NO. 56076

Hazen
HAZEN AND SAWYER
4000 HOLLYWOOD BOULEVARD, SUITE 750N
HOLLYWOOD, FLORIDA 33021
CERTIFICATE OF AUTHORIZATION NO. : 2771

CITY OF HALLANDALE BEACH

WATER TREATMENT PLANT
HIGH SERVICE PUMP REPLACEMENT

Hallandale Beach
PROSPERITY, INNOVATION, OPPORTUNITY

HVAC NOTES AND SCHEDULES

DATE: SEPTEMBER 2017
HAZEN NO.: 40621-000
CONTRACT N0.: 1
DRAWING NUMBER: H-01

50% SUBMITTAL

File: H:\40621-000 HALLANDALE HIGH SERVICE PUMPS\DRAWINGS\HVAC\H-01 Saved By LAURA Save Date: 2017/08/11 10:13 AM
PLOT DATE: 2017/08/11 11:14:28 AM BY: LAURA

LOUVER SCHEDULE

MARK	QTY	BUILDING	MANUFACTURER	MODEL NO.	MATERIAL	LOUVER TYPE	FRAME		MASONRY OPENING		DAMPER		DESIGN WIND PRESSURE		FREE AREA (SQFT)	AIR FLOW (CFM)	STATIC PRESSURE DROP (IN WG)	FREE AREA VELOCITY (FPM)	OPTIONS				
							FINISH	DEPTH	WIDTH	HEIGHT	GRAVITY	FIRE	+ (PSF)	- (PSF)					BIRD SCREEN	INSECT SCREEN	SECURITY BARS	FILTER	PERIMETER FLANGE
L-1	2	SODIUM HYPOCHLORITE STORAGE TANKS ROOM	GREENHECK	EHH-601D	ALUMINUM	INTAKE, FIXED, WIND-DRIVEN RAIN RESISTANT STATIONARY	KYNAR	6"	4'-0"	6'-0"					11.77	5,500	0.23	467	X				
L-2	3	SODIUM HYPOCHLORITE FEED PUMP ROOM	GREENHECK	EHH-601D	ALUMINUM	INTAKE, FIXED, WIND-DRIVEN RAIN RESISTANT STATIONARY	KYNAR	6"	2'-0"	6'-0"					5.56	717	0.23	129	X				

OUTDOOR WALL MOUNTED AIR CONDITIONER

MARK No.	LOCATION	AREA SERVED	MANUFACTURER & MODEL No.	*CAPACITY BTU/HR		FAN DATA				FILTER		ELECTRIC HEAT		ELECTRIC				NOTES
				TOTAL	SENSIBLE	RPM/BHP	CFM	H.P.	E.S.P.	NUMBER	SIZE INCHES	STAGES	K.W.	MCA	WS	OPD	V/P/HZ	
AC-1	ELECTRICAL ROOM	ELECTRICAL ROOM	BARD W36AAD-C	36,400	25,800	1100/0.33	1100	0.33	0.3	1	16 X 30 X 1	1	5	12	#14	15	460 / 3 / 60	1,2,3,4,5
AC-2	ELECTRICAL ROOM	ELECTRICAL ROOM	BARD W36AAD-C	36,400	25,800	1100/0.33	1100	0.33	0.3	1	16 X 30 X 1	1	5	12	#14	15	460 / 3 / 60	1,2,3,4,5

* 67° F EWB, 80° F EDB AND 95° F DB AMBIENT

NOTES:
1. STAINLESS STEEL CABINET. 2. 10.0 EER. 3. HONEYWELL 6000 7-DAY PROGRAMMABLE DIGITAL THERMOSTAT WITH AUTO CHANGEOVER, AND TEMPORARY SET POINT OVERRIDE FEATURE. PROVIDE WITH 5 YEAR WARRANTY. 4. PHENOLIC COATED COILS. 5. BARD SUPPLY AND RETURN AIR GRILLES.

FLORIDA BUILDING CODE TABLE 1522.3 ROOF MOUNTED EQUIPMENT HEIGHT REQUIREMENTS

WIDTH OF EQUIPMENT (INCHES)	HEIGHT OF LEGS (INCHES)
UP TO 24"	14"
25" TO 36"	18"
37" TO 48"	24"
49" TO 60"	30"
61" AND WIDER	48"

NOTE:

ROOF MOUNTED EXHAUST FANS SHALL MOUNTED A MINIMUM OF 24" ABOVE ROOF TO COMPLY WITH TABLE 1522.3 ON THE 2014 FLORIDA BUILDING CODE (MECHANICAL).

DESIGN TEMPERATURE CONDITIONS (DEGREE FAHRENHEIT)

OUTSIDE	SODIUM HYPOCHLORITE STORAGE AND PUMP ROOMS	ELECTRICAL ROOM
WINTER: 45 Dry Bulb	WINTER: 45 Dry Bulb	WINTER: 70 Dry Bulb
SUMMER: 92 Dry Bulb / 79 Wet Bulb	SUMMER: 92 Dry Bulb / 79 Wet Bulb	SUMMER: 70 Dry Bulb

REV	ISSUED FOR	DATE	BY

PROJECT ENGINEER: -
DESIGNED BY: F.A.M.
DRAWN BY: L.M.S.
CHECKED BY:
IF THIS BAR DOES NOT MEASURE 1" THEN DRAWING IS NOT TO FULL SCALE 0 1/2" 1"

GEORGE A. BROWN, PE NO. 56076

Hazen
HAZEN AND SAWYER
4000 HOLLYWOOD BOULEVARD, SUITE 750N
HOLLYWOOD, FLORIDA 33021
CERTIFICATE OF AUTHORIZATION NO. : 2771

CITY OF HALLANDALE BEACH

WATER TREATMENT PLANT
HIGH SERVICE PUMP REPLACEMENT

Hallandale Beach
PROGRESS. INNOVATION. OPPORTUNITY

HVAC NOTES AND SCHEDULES

DATE: SEPTEMBER 2017
HAZEN NO.: 40621-000
CONTRACT N0.: 1
DRAWING NUMBER: H-02

50% SUBMITTAL

File: H:\40621-000 HALLANDALE HIGH SERVICE PUMPS\DRAWINGS\HVAC\H-02 Saved By LAURA Save Date: 2017/08/09 2:15 PM
PLOT DATE: 2017/08/11 11:14:34 AM BY: LAURA

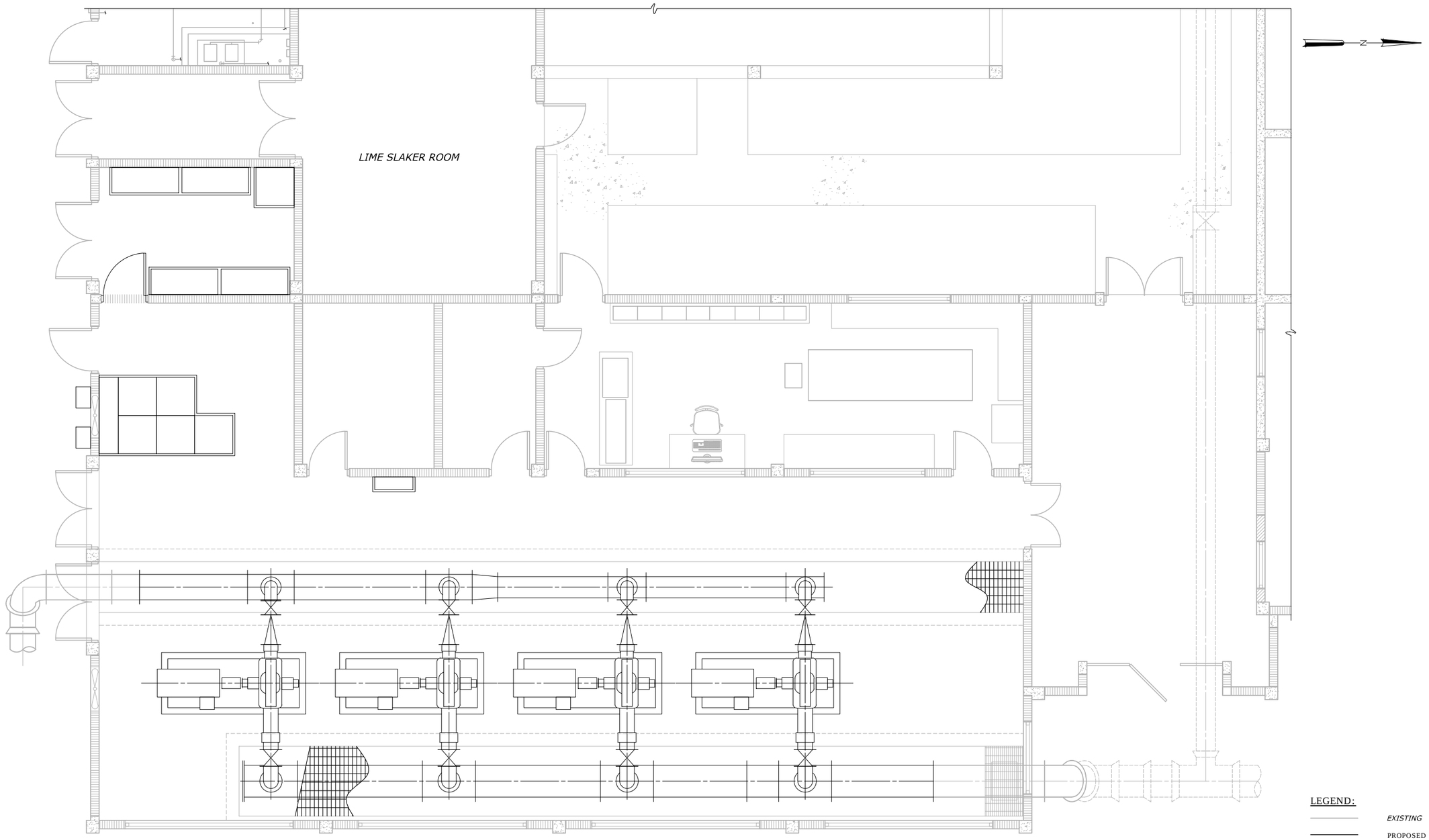

LEGEND:

EXISTING

PROPOSED

1/4"=1'-0"

1 0 1 2 3 7'

REV	ISSUED FOR	DATE	BY

PROJECT ENGINEER:	-
DESIGNED BY:	F.A.M.
DRAWN BY:	G.K.
CHECKED BY:	

IF THIS BAR DOES NOT MEASURE 1" THEN DRAWING IS NOT TO FULL SCALE 0 1/2" 1"

GEORGE A. BROWN, PE NO. 56076

Hazen

HAZEN AND SAWYER
4000 HOLLYWOOD BOULEVARD, SUITE 750N
HOLLYWOOD, FLORIDA 33021
CERTIFICATE OF AUTHORIZATION NO. : 2771

CITY OF HALLANDALE BEACH

WATER TREATMENT PLANT
HIGH SERVICE PUMP REPLACEMENT

Hallandale Beach
PRIDE-TO, INNOVATION, OPPORTUNITY

HVAC PLAN

DATE:	SEPTEMBER 2017
HAZEN NO.:	40621-000
CONTRACT N0.:	1
DRAWING NUMBER:	H-03

50% SUBMITTAL

File: H:\40621-000 HALLANDALE HIGH SERVICE PUMPS\DRAWINGS\HVAC\H-03 Saved By LAURA Save Date: 2017/08/11 10:20 AM
PLOT DATE: 2017/08/11 11:14:47 AM BY: LAURA

INSPECTION PHOTOGRAPHS

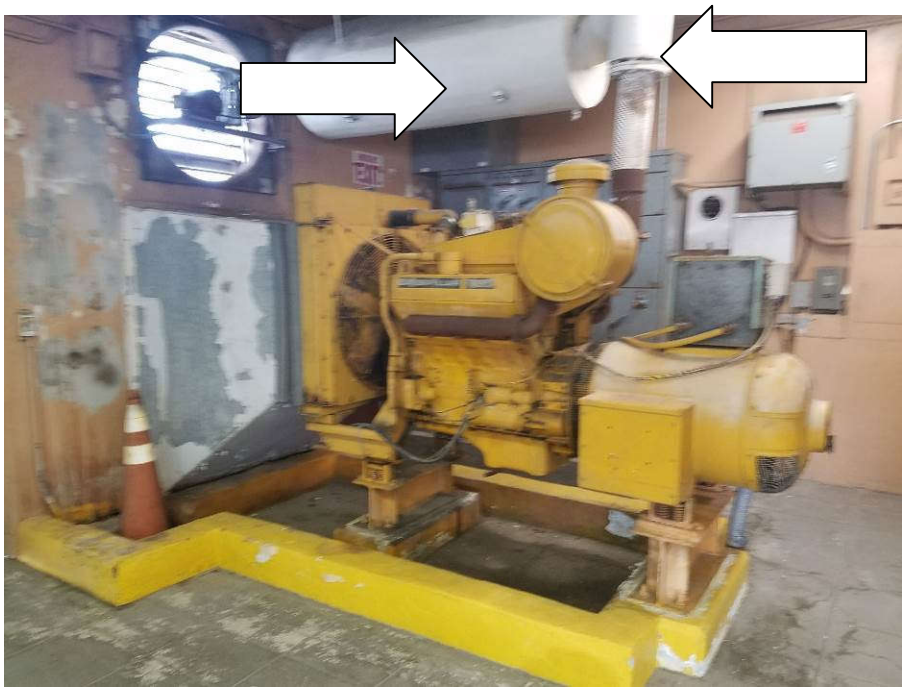

Photo 1: RACM insulation identified during this inspection.

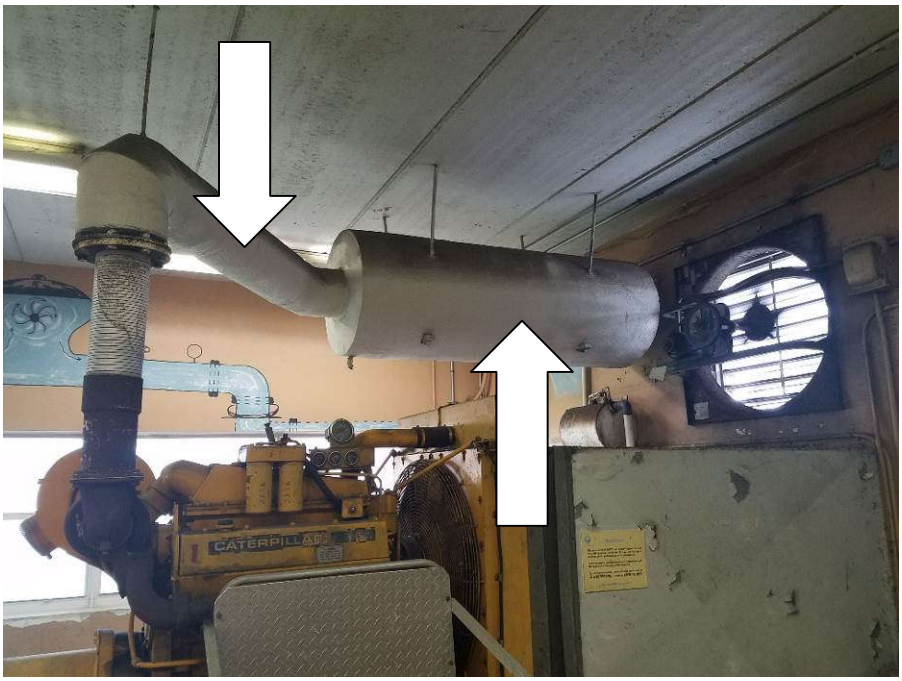

Photo 2: RACM insulation identified during this inspection.

Photograph #3: View of the subject area pump room scheduled for pump and plumbing replacement.

Photograph #4: No suspect materials observed in the transformer room scheduled for equipment replacement.

CERTIFICATES

Asbestos Consulting & Training Systems

41370.4898CERT/BIR

900 N.W. 5TH Avenue, Fort Lauderdale, Florida 33311 (954) 524-7208

Processed By:

Seagull
To Authenticate Certificate
www.seagulltraining.com
1-800-966-9933

This is to Certify that

Hiram Aguiar

X X X – X X – Ø

11042 NW, Hialeah, FL 33012

has successfully completed an English

Asbestos Building Inspection Refresher

7-Apr-17 TO 7-Apr-17

UNDER CIVIL AND CRIMINAL PENALTIES OF LAW FOR MAKING OR SUBMISSION OF FALSE OR FRAUDULENT STATEMENTS OR REPRESENTATIONS (18 U.S.C. 1001 AND 15 U.S.C. 2615), I CERTIFIY THAT THIS TRAINING COMPLIES WITH ALL APPLICABLE REQUIREMENTS OF TITLE IV OF THE "TOXIC SUBSTANCES CONTROL ACT" 40 CFR PART 745 SUBPART L AND ANY OTHER APPLICABLE FEDERAL, STATE, OR LOCAL REQUIREMENTS, AS AMENDED.

Meets state requirements of FL49-0001020/CN-0006273 and UT (6.0 core).

NDAAC Provider #451 Trainer(s): Mark Knick

Training Address: 900 NW 5 AV, Fort Lauderdale, FL, 33311

Successful course completion based on exam score on: 04/07/17

James F. Stump, Course Sponsor

This Certificate Expires:

7-Apr-18 Ø 4 / Ø 7 / 1 8

Certificate Number: 1 7 1 6 6 1

Course Number: SE1714

Footbold acquired, please pay .1BTC to 13tzXpBumUf7XxGEctkG2kKcnCSJbjFHtx or we

STATE OF FLORIDA
DEPARTMENT OF BUSINESS AND PROFESSIONAL REGULATION

ASBESTOS LICENSING UNIT
2601 BLAIR STONE ROAD
TALLAHASSEE FL 32399-0783

(850) 487-1395

SALL, JAY WALTER
EE & G ENVIRONMENTAL SERVICES LLC
5751 MIAMI LAKES DRIVE
MIAMI LAKES FL 33014

Congratulations! With this license you become one of the nearly one million Floridians licensed by the Department of Business and Professional Regulation. Our professionals and businesses range from architects to yacht brokers, from boxers to barbeque restaurants, and they keep Florida's economy strong.

Every day we work to improve the way we do business in order to serve you better. For information about our services, please log onto **www.myfloridalicense.com**. There you can find more information about our divisions and the regulations that impact you, subscribe to department newsletters and learn more about the Department's initiatives.

Our mission at the Department is: License Efficiently, Regulate Fairly. We constantly strive to serve you better so that you can serve your customers. Thank you for doing business in Florida, and congratulations on your new license!

STATE OF FLORIDA
DEPARTMENT OF BUSINESS AND
PROFESSIONAL REGULATION

AX0000011 ISSUED: 10/25/2016

ASBESTOS CONSULTANT
SALL, JAY WALTER
EE & G ENVIRONMENTAL SERVICES LLC

IS LICENSED under the provisions of Ch.469 FS.
Expiration date : NOV 30, 2018 L1610250005421

DETACH HERE

RICK SCOTT, GOVERNOR

KEN LAWSON, SECRETARY

STATE OF FLORIDA
DEPARTMENT OF BUSINESS AND PROFESSIONAL REGULATION
ASBESTOS LICENSING UNIT

LICENSE NUMBER	
AX0000011	

The ASBESTOS CONSULTANT
Named below IS LICENSED
Under the provisions of Chapter 469 FS.
Expiration date: NOV 30, 2018

SALL, JAY WALTER
EE & G ENVIRONMENTAL SERVICES LLC
2922 FLAMINGO DRIVE
MIAMI BEACH FL 33140

ISSUED: 10/25/2016 DISPLAY AS REQUIRED BY LAW SEQ # L1610250005421

City of Hallandale Beach

Water Treatment Plant

High Service Pump Replacement

Attachment C

1967 Water Plant Record Drawings

The attached drawings are provided for informational purposes with the Contract Documents. The attached drawings are not a part of the Contract Documents. The City of Hallandale Beach and Hazen and Sawyer make no guarantee, either expressed or implied, as to accuracy or completeness of the drawings.

CITY COMMISSION

ERNEST J. PINTO · · · · · · · MAYOR
JAMES V. O'LEARY · · · · · · VICE MAYOR
E. J. AVERMAN, JR. · · · · · · COMMISSIONER
JACK LAWRENCE · · · · · · · COMMISSIONER
RUSSELL WILSON · · · · · · · COMMISSIONER
ROBERT F. WILLIAMS · · · · · CITY MANAGER

WATERWORKS AND SANITARY SEWER EXTENSIONS

FOR

CITY OF HALLANDALE, FLORIDA

WATER TREATMENT PLANT

SAME AS
HA 2019.22.24.37

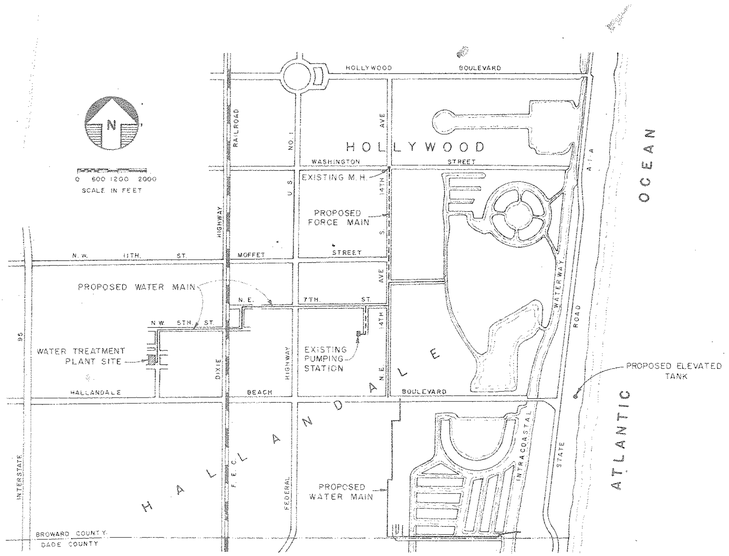

VICINITY PLAN

JULY 1967

PHILPOTT ROSS & SAARINEN, INC.
ENGINEERS
FORT LAUDERDALE, FLORIDA

INDEX — PLAN SET NO. I			
ADDITION TO WATER TREATMENT PLANT			
SHEET NO.	TITLE	SHEET NO.	TITLE
	WATER TREATMENT PLANT	21	FILTER SECTIONS – II
1	SITE PLAN	22	FILTER SECTIONS – III
2	PAVING & GRADING PLAN	23	SECTIONS & DETAILS
3	YARD PIPING PLAN	24	LIME SILO DETAILS
4	LANDSCAPE PLAN	25	INSTRUMENTATION DIAGRAM
5	LAWN SPRINKLER PLAN	26	ELEC. PLOT PLAN, SCHEDULE & NOTES
6	FIRST FLOOR PLAN	27	SINGLE LINE DIAGRAM AND LEGEND
7	SECOND FLOOR PLAN	28	WIRING DIAGRAMS
8	ENLARGED FLOOR PLAN	29	FIRST FLOOR LIGHTING PLAN
9	EXTERIOR ELEVATIONS	30	FIRST FLOOR POWER & COMMUNICATIONS PLAN
10	ELEVATIONS & DETAILS	31	SECOND FLOOR ELECTRICAL PLAN
11	SECTIONS THROUGH PUMPROOM		
12	SECTION THROUGH FILTERS		
13	LONGITUDINAL SECTION THROUGH PLANT		GARAGE
14	SECTION AT WALKWAY	32	SITE GRADING & PAVING PLAN
15	ONE MILLION GALLON RESERVOIR	33	LANDSCAPE PLAN
16	SOLIDS CONTACT UNIT	34	LAWN SPRINKLER PLAN
17	MISCELLANEOUS DETAILS	35	FLOOR & FOUNDATION PLAN & ELEVATIONS
18	FLOOR AND FOUNDATION PLAN	36	PLUMBING & MISCELLANEOUS SCHEDULES
19	SECOND FLOOR & ROOF PLAN	37	ELECTRICAL PLAN & DIAGRAMS
20	FILTER SECTIONS – I		

WATER TREATMENT PLANT

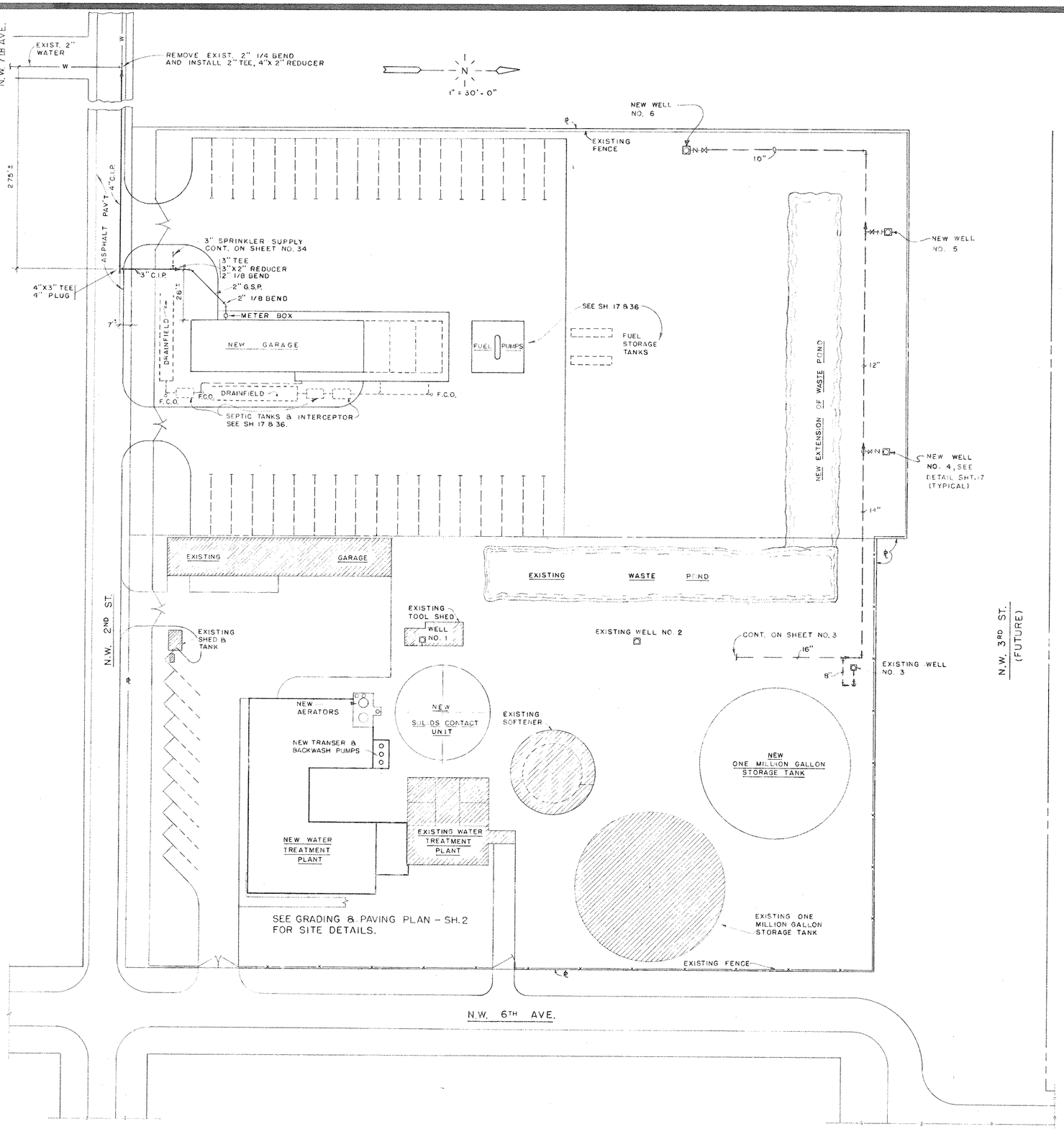

ABBREVIATIONS

ABV.	ABOVE
A/C	AIR CONDITIONER
A.R	ACID RESISTING
B.M.	BENCH MARK
B.V.	BUTTERFLY VALVE
C.C.	CENTER TO CENTER
CIP	CAST IRON PIPE
℄	CENTERLINE
C.V	CHECK VALVE
CONT	CONTINUOUS
CONT.	CONTINUATION
C.O.	CLEAN OUT
C.I.	CAST IRON
C.D.	CEILING DIFFUSER
C.F.M.	CUBIC FEET PER MINUTE
CONC.	CONCRETE
C.R.	CONCENTRIC REDUCER
DPR.	DAMPER
EA.	EACH
E.W.C.	ELECTRIC WATER COOLER
E.W.H.	ELECTRIC WATER HEATER
EL. OR ELEV.	ELEVATION
E.R.	ECCENTRIC REDUCER
EXIST.	EXISTING
EXH.	EXHAUST
EFF.	EFFLUENT
E.W.	EACH WAY
F.C.O.	FLUSH CLEAN OUT
F.D.	FLOOR DRAIN
F.E.	FIRE EXTINGUISHER (CO_2)
G.S.P.	GALVANIZED STEEL PIPE
G.V.	GATE VALVE
H.B.	HOSE BIBB
L.D.	LOUVERED DOOR
L.R.	LONG RADIUS
LG.	LONG
LAV.	LAVATORY
M.H.	MANHOLE
M.J.	MECHANICAL JOINT
MIN., MAX.	MINIMUM, MAXIMUM
N.C.	NORMALLY CLOSED
N.O.	NORMALLY OPEN
O.A	OVERALL
O.C.	ON CENTERS
O/A	OUTSIDE AIR
O/E.	OR EQUAL
O.B.	OPPOSED BLADE
P.D.	PUMP DRAIN
R.W.L.	RAIN WATER LEADER
R/A	RETURN AIR
SHW.	SHOWER
SK.	SINK
S. SK.	SERVICE SINK
SHT. OR SH.	SHEET
S.D.	SPLITTER DAMPER
SCU	SOLIDS CONTACT UNIT
T&B	TOP & BOTTOM
TYP.	TYPICAL
UR.	URINAL
U.G.	UNDERGROUND
V.I.V.	VALVE IN VERTICAL
V.	VENT
V.T.R.	VENT THROUGH ROOF
W.	WASTE
W.&V.	WASTE & VENT
W.C.	WATER CLOSET
W.T.P.	WATER TREATMENT PLANT
W.T.	WASH TROUGH
W/	WITH
W/L	WATER LEVEL

LEGEND

*	NEW PIPE – ABOVE GROUND
*	NEW PIPE – UNDER GROUND OR BELOW FLOOR
*	EXISTING PIPE – ABOVE GROUND
*	EXISTING PIPE – UNDER GROUND
	SANITARY
	SANITARY VENT
	SAFE WASTE
	COLD WATER
	HOT WATER
	GATE OR BUTTERFLY VALVE, OR AS NOTED.
	CHECK VALVE
	UNION
R.W.L.	RAIN WATER LEADER
CL	CHLORINE SOLUTION
L	LIME SOLUTION
	TURNING VANES
	EXTRACTORS
T	THERMOSTAT
	HOSE BIBB
	FLUSH CLEANOUT
P	PRESSURE GAUGE

* THESE ITEMS DO NOT APPLY TO SITE OR YARD PLANS DUE TO REDUCED SCALE.

GENERAL NOTES

1. ALL CONCRETE SHALL BE CLASS "B" (3000 P.S.I.) UNLESS NOTED OTHERWISE OR SPECIFIED. CONCRETE FOR PRESTRESSED UNITS SHALL HAVE A MINIMUM 28 DAY STRENGTH OF 5000 P.S.I. AND STRENGTH AT TIME OF RELEASE SHALL BE 3500 P.S.I. OR GREATER AS REQ'D.
2. FABRICATION AND ERECTION OF REINFORCING BARS SHALL CONFORM TO THE A.C.I. CODE.
3. UNLESS NOTED OTHERWISE ALL DOWEL BARS ARE TO BE THE SAME SIZE AND SPACING AS THE BARS THEY LAP.
4. ALL EXPOSED CONCRETE EDGES ARE TO HAVE A 3/4 INCH CHAMFER UNLESS NOTED OTHERWISE.
5. FOR EMBEDDED PARTS, ANCHOR BOLTS, PIPES, SLEEVES, CONDUITS, ETC., SEE ELECTRICAL, MECHANICAL, PIPING AND EQUIPMENT MANUFACTURER'S APPROVED SHOP DRAWINGS.
6. THE CONTRACTOR SHALL PROTECT ALL STRUCTURES FROM FLOTATION UNTIL THE STRUCTURE IS PLACED IN OPERATION.
7. CONSTRUCTION JOINTS OTHER THAN THOSE SHOWN ON THE PLANS SHALL BE SUBMITTED TO THE ENGINEER FOR APPROVAL.
8. ALL EXPANSION BOLTS SHALL BE "PHILLIPS REDHEAD", O/E, IN THE SIZES CALLED FOR ON THE PLANS, OR AS SPECIFIED.
9. ALL UNDERGROUND PIPING 6 INCHES IN DIAMETER AND LARGER SHALL BE PROVIDED WITH THRUST BLOCKING OF CLASS C CONCRETE.
10. ALL ABOVE GRADE PIPING SHALL BE PROVIDED WITH PEDESTAL, PIER, PIPE COLUMN, WALL BRACKET, HANGER AND OTHER SUPPORT AS INDICATED OR REQUIRED TO PREVENT DEFLECTION AND/OR VIBRATION.

REV. NO.	DATE	DRWN	CHKD	REMARKS
0	7/67	RCB	ALM	

ADDITION TO WATER TREATMENT PLANT

CITY OF HALLANDALE
BROWARD COUNTY, FLORIDA

SITE PLAN

PHILPOTT, ROSS, & SAARINEN, INC.
ENGINEERS
FORT LAUDERDALE, FLA.

DATE 7/67

REGISTERED ENGINEER NO. 4017

SHEET 1 R.O.

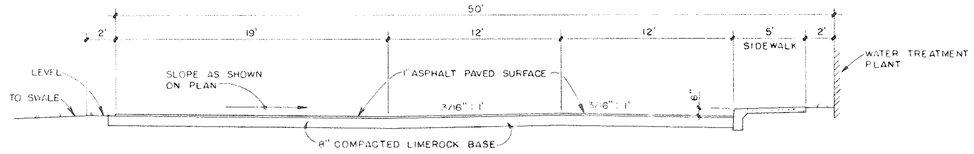

PAVEMENT DETAIL - SECTION A-A

NOT TO SCALE

SCALE 1" = 20'

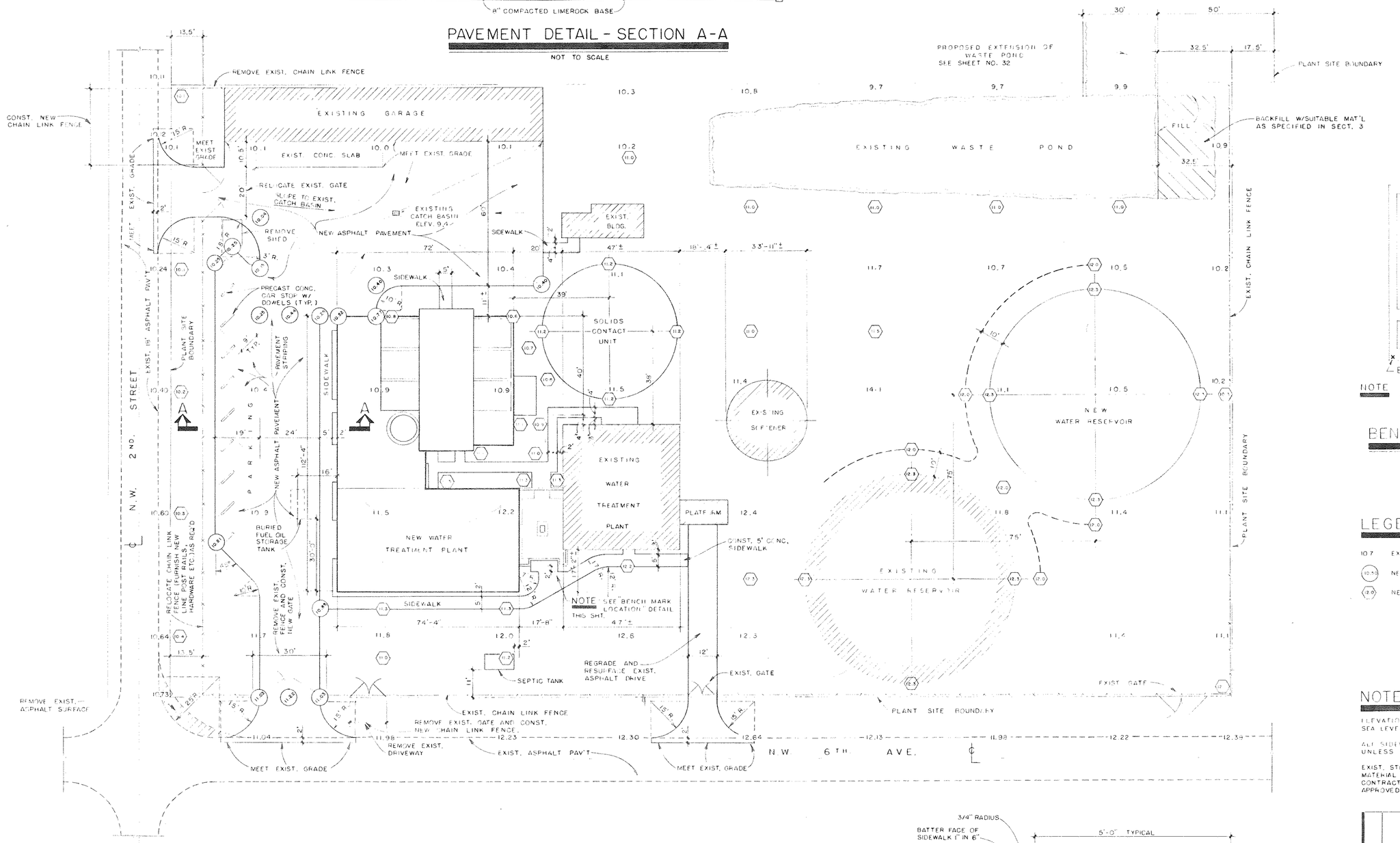

NOTE TRANSFER BENCH MARK TO PERMANENT LOCATION PRIOR TO CONSTRUCTION.

BENCH MARK LOCATION

1" = 20'

LEGEND

10.7	EXISTING GRADE
10.5	NEW PAVEMENT GRADE
12.0	NEW FINISH GRADE

NOTES:

ELEVATIONS REFER TO U.S.C.&G.S. (MEAN SEA LEVEL) DATUM.

ALL SIDEWALKS TO HAVE 1/4" : 1' CROSS SLOPE, UNLESS OTHERWISE SHOWN.

EXIST. STOCK PILES OF PIPE AND OTHER MATERIAL WILL BE REMOVED BY THE OWNER. CONTRACTORS STORAGE SHALL BE AS APPROVED BY THE ENGINEER.

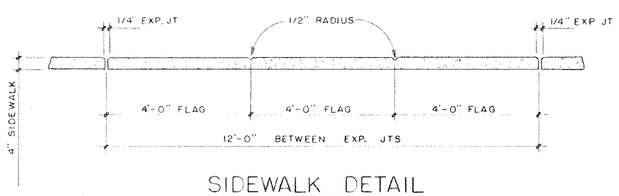

SIDEWALK DETAIL

NOT TO SCALE

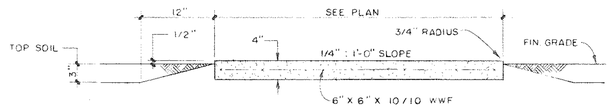

TYPICAL SIDEWALK SECTION

NOT TO SCALE

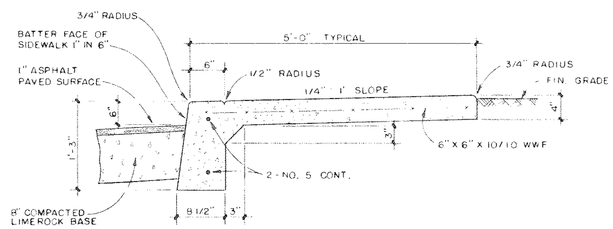

TYPICAL SIDEWALK SECTION

NOT TO SCALE

REV NO	DATE	DRWN	CHKD	REMARKS
0	6/67	G.D.B.	A.L.M.	

ADDITION TO WATER TREATMENT PLANT

CITY OF HALLANDALE
BROWARD COUNTY, FLORIDA

PAVING & GRADING PLAN

PHILPOTT, ROSS & SAARINEN, INC.
ENGINEERS
FORT LAUDERDALE, FLA.

DATE 7/67

REGISTERED ENGINEER NO. 4017

SHEET 2 RC

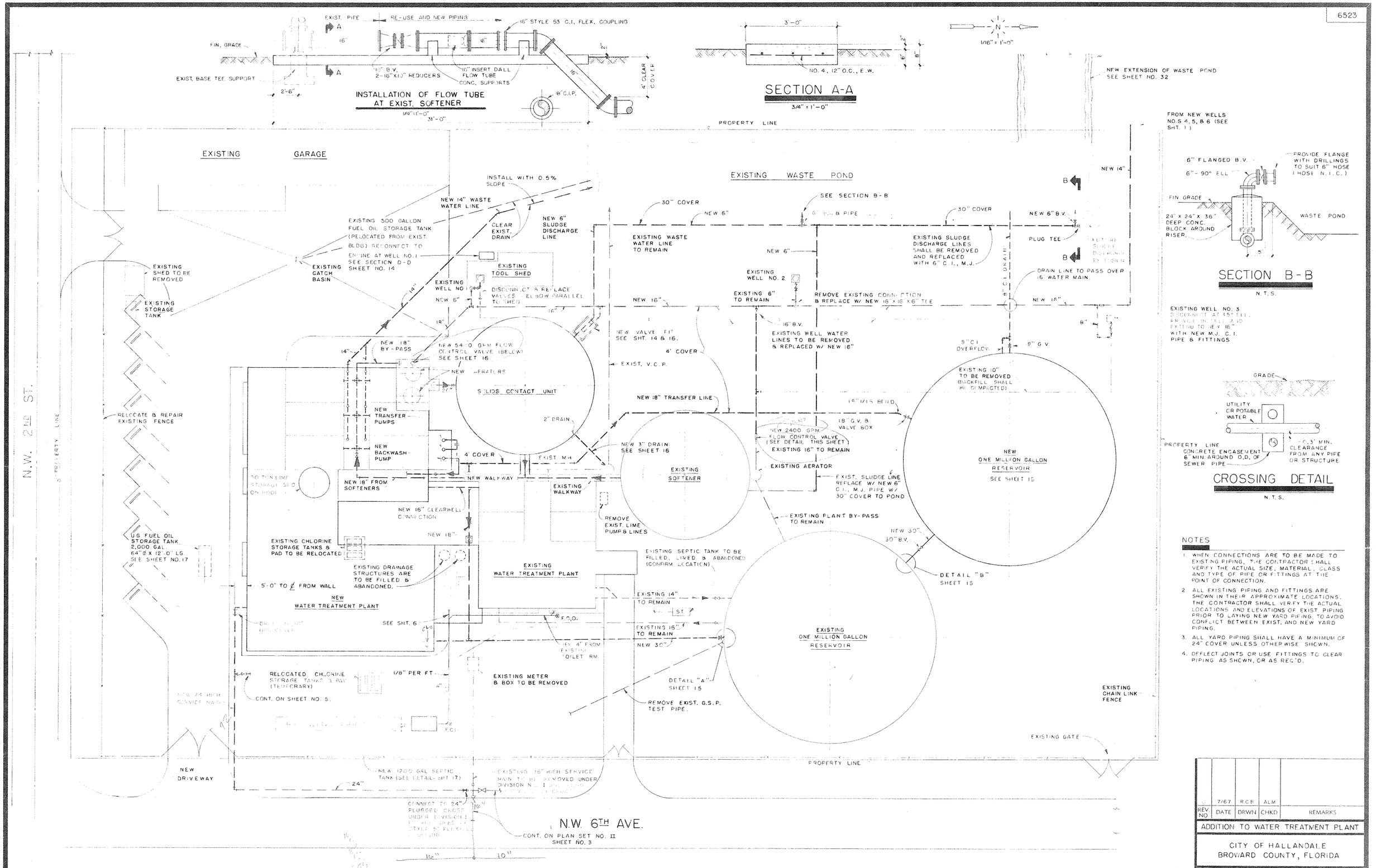

NOTES

1. WHEN CONNECTIONS ARE TO BE MADE TO EXISTING PIPING, THE CONTRACTOR SHALL VERIFY THE ACTUAL SIZE, MATERIAL, CLASS AND TYPE OF PIPE OR FITTINGS AT THE POINT OF CONNECTION.
2. ALL EXISTING PIPING AND FITTINGS ARE SHOWN IN THEIR APPROXIMATE LOCATIONS. THE CONTRACTOR SHALL VERIFY THE ACTUAL LOCATIONS AND ELEVATIONS OF EXIST. PIPING PRIOR TO LAYING NEW YARD PIPING, TO AVOID CONFLICT BETWEEN EXIST. AND NEW YARD PIPING.
3. ALL YARD PIPING SHALL HAVE A MINIMUM OF 24" COVER UNLESS OTHERWISE SHOWN.
4. DEFLECT JOINTS OR USE FITTINGS TO CLEAR PIPING AS SHOWN, OR AS REQ'D.

REV. NO	DATE	DRWN	CHKD	REMARKS
	7/67	R.C.B.	A.L.M.	

ADDITION TO WATER TREATMENT PLANT

CITY OF HALLANDALE
BROWARD COUNTY, FLORIDA

YARD PIPING PLAN

PHILPOTT, ROSS & SAARINEN, INC.
ENGINEERS
FORT LAUDERDALE, FLA.

DATE 7/67 | REGISTERED ENGINEER NO. 4017 | SHEET 3 OF 8

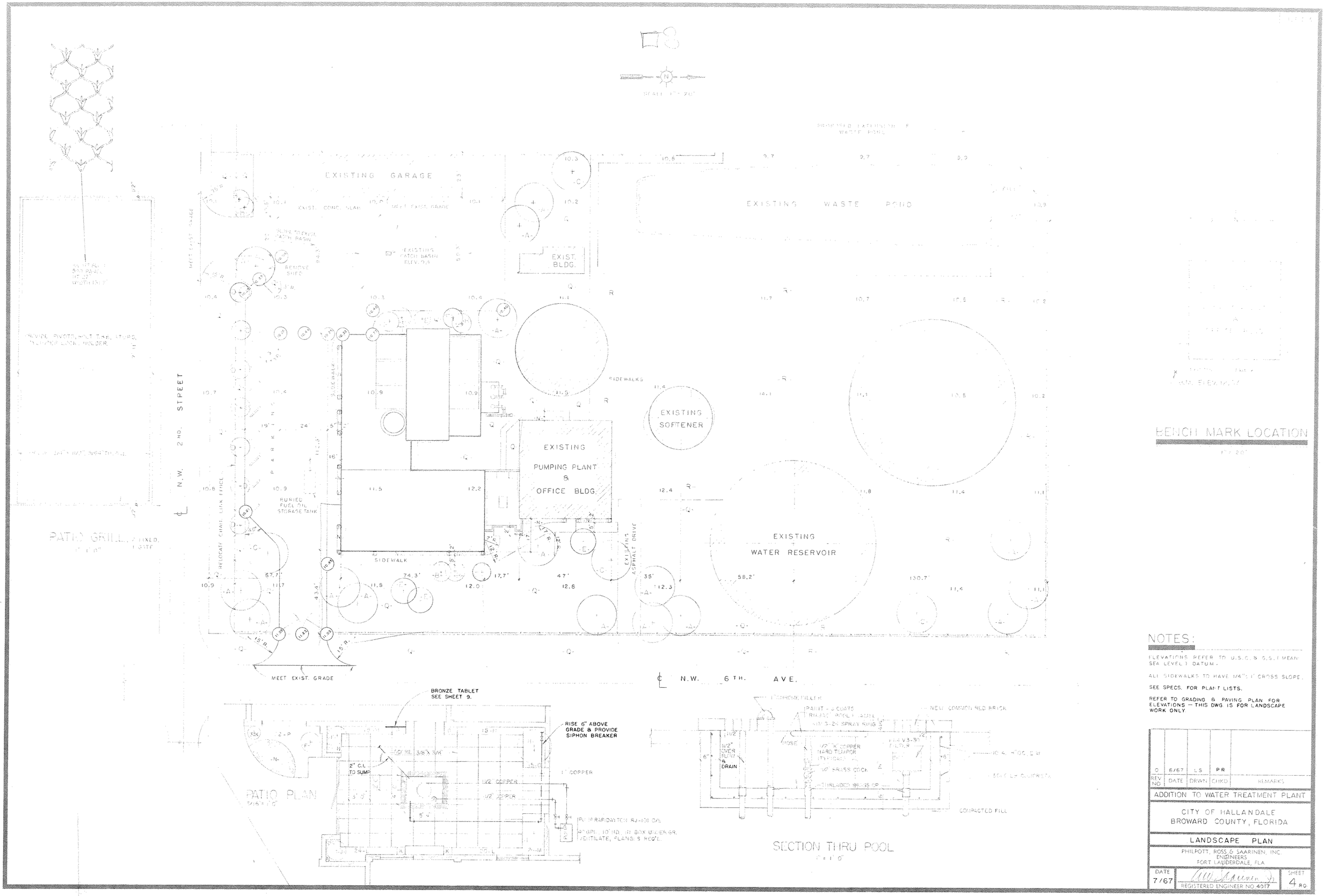

NOTES:

ELEVATIONS REFER TO U.S.C. & G.S. (MEAN SEA LEVEL) DATUM.

ALL SIDEWALKS TO HAVE 1/4" : 1' CROSS SLOPE.

SEE SPECS. FOR PLANT LISTS.

REFER TO GRADING & PAVING PLAN FOR ELEVATIONS — THIS DWG. IS FOR LANDSCAPE WORK ONLY.

REV NO	DATE	DRWN	CHKD	REMARKS
0	6/67	L.S.	P.R.	

ADDITION TO WATER TREATMENT PLANT

CITY OF HALLANDALE
BROWARD COUNTY, FLORIDA

LANDSCAPE PLAN

PHILPOTT, ROSS, & SAARINEN, INC.
ENGINEERS
FORT LAUDERDALE, FLA

DATE 7/67 | REGISTERED ENGINEER NO. 4017 | SHEET 4 RO

6523

SCALE 1" = 20'

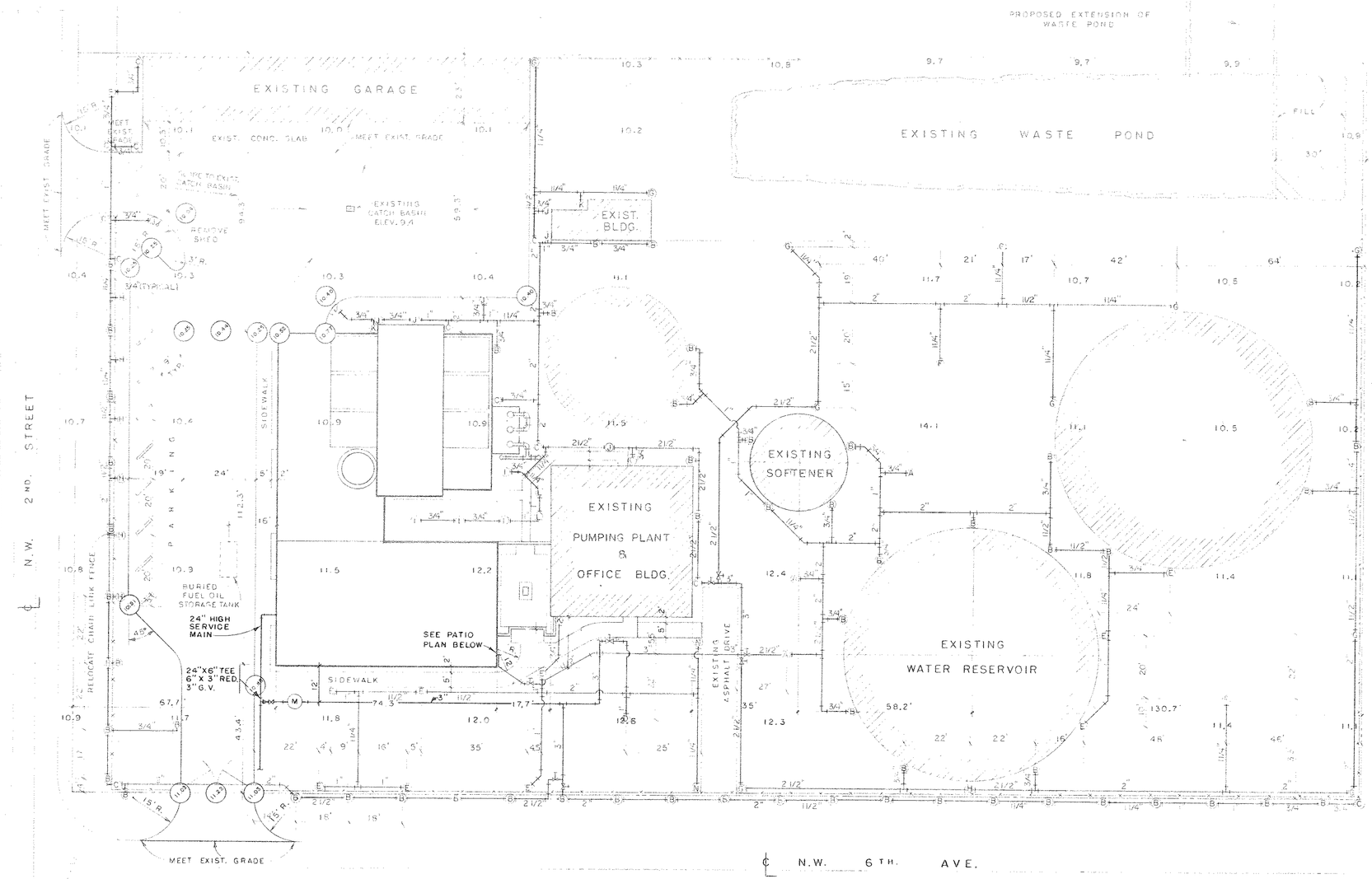

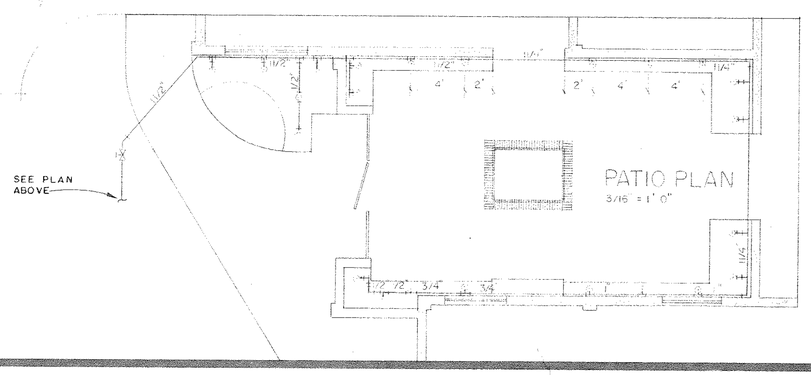

LEGEND

(A)	RAIN BIRD	NO.171 SS-F	SPRINKLER	1/2" CON.
(B)	" "	NO.171 SS-H	"	1/2" CON.
(C)	" "	NO.171 HS-C	"	1/2" CON.
(D)	" "	NO. 2F	"	3/4" CON.
(E)	" "	NO. 2H	"	3/4" CON.
(F)	BUCKNER	NO. 2-12 G. 7/32" N	"	3/4" CON.
(G)		NO. 5/12 NR A 7/32" N	"	1" CON.
(H)	THOMPSON	NO. 117 S	"	1/2" CON.
(I)	BUCKNER	NO. 40 S.D.S.U.	"	1/2" CON.
(J)	"	NO. 40 S.D.N.U.	"	1/2" CON.
(K)	"	NO. 40 S.D.C.U.	"	1/2" CON.
(L)	"	NO. 40 S.D.T.-U.C.	"	1/2" CON.
(M)	THOMPSON	NO. 700 S.	BUBBLER	1/2" CON.
(N)	BUCKNER	NO. 12 P.S.N.		1" CON.
(K)	2" WATER METER, 2" SERVICE			
	BUCKNER SERIES 500 ANGLE VALVE			
	TYPE II SCHEDULE 40 PVC PIPE			

PROVIDE VACUUM BRKS. ALL CIRCUITS.

LEGEND

10.5 EXISTING GRADE.

(12.7) NEW PAVEMENT GRADE.

EXISTING STRUCTURE

AREA TO BE FILLED-IN

NEW STUCTURE

NOTES:

ELEVATIONS REFER TO U.S.C. & G.S. (MEAN SEA LEVEL) DATUM.

ALL SIDEWALKS TO HAVE 1/4": 1' CROSS SLOPE.

REFER TO GRADING & PAVING PLAN FOR ELEVATIONS. THIS DWG. IS FOR LAWN SPRINKLER WORK ONLY.

REV. NO	DATE	DRWN	CHKD	REMARKS
0	6/67	LS	PR	

ADDITION TO WATER TREATMENT PLANT

CITY OF HALLANDALE
BROWARD COUNTY, FLORIDA

LAWN SPRINKLER PLAN

PHILPOTT, ROSS & SAARINEN, INC.
ENGINEERS
FORT LAUDERDALE, FLA.

DATE 7/67 | REGISTERED ENGINEER NO 4017 | SHEET 5 RC

6523

FOR CONTINUATION SEE YARD PIPING PLAN SHEET NO. 3

SHEET 13

FILTER NO. 1

FILTER NO. 2

FILTER NO. 3

FILTER NO. 4

FILTER NO. 5

FILTER NO. 6

14" WASTE WATER

4" FILTER TO WASTE LINE (TYP.)

8" EFFLUENT (TYP)

NEW 4000 GPM TRANSFER PUMPS

NEW 3240 GPM BACKWASH PUMP

P-13 P-14 P-15 4" TO SURFACE WASH HEADER

CHLORINE STORAGE ROOM

SCALE

SHEET 12

2" DRAIN

3 CU. FT. 3/4 ROCK

LIME CONN.

CHLORINATOR ROOM

AR 4" F.D.

3/4" HB.

4" A.R.

CONT. ON SHT. 5

LIME FEEDER ROOM

SEE ENLARGED FLOOR PLANS SHT. 5 FOR ROOMS IN THIS AREA

4" F.D.

4" HOLD HIGH

12" Φ X 30" V.C. PIPE SET IN ONE YD. OF 3/4" ROCK

TRANSFORMER ROOM

STORAGE AREA

24x12 L/A SEE SHT. 8

7 1/2 X 7 1/2 FAN DUCT THRU ROOF NUTONE MODEL 8310 160 C.F.M.

12x12

270 CFM. O/A

12" X 12" W/OL. DPR.

TRANE MODEL SHP-30 O/E HEAT PUMP (SEE SPECS)

1 1/2" METER

ELECTRIC SWITCHGEAR

NEW DIESEL ELECTRIC SET

EXH. FAN ABV. SEE SHT. 9

DAY TANK

FUEL OIL TRANSFER PUMP P-16

SHEET 11

5'-0"

24" FLG'D 1/4 BEND, ROTATE 45°

FOR CONT. SEE YARD PIPING PLAN SHT. 3

HIGH SERVICE FLOW TUBE SEE SHT. 25

STRAIGHTENING VANE ASSEMBLE

6" X 4" ELL TO 4" B.V.

24" FLG'D 1/8 BEND

NEW 3,000 GPM PUMP & DIESEL ENGINE

NEW 3,000 GPM PUMP

NEW 3,000 GPM PUMP

EXIST. 1,500 GPM PUMP (RELOCATED)

EXIST. 500 GPM PUMP (RELOCATED)

P-1 P-2 P-3 P-4 P-5

24" x 6" TEE

EXH. FAN ABV. SEE SHT. 9

FUEL OIL TRANSFER PUMP P-17

DAY TANK ABOVE BATTERY RACK

TRENCH COVER IN 3'-0" SECTIONS

13'-6" 14'-0" 14'-0" 11'-6" 10'-6" 9'-2" (N.T.S.) 72'-8" (N.T.S.)

SCALE: 3/16" = 1'-0"

SHEET 14

RISE TO ELEV. 22.0 ±

14" SIDE OUTLET ELL TO HEADER & DOWN TO TRENCH CROSS CONNECTION

4" METER

B V WITH U G OPERATOR

NEW 16" CLEARWELL CONNECTION

NEW 18"

SIDEWALK (SEE SHEET 14)

SHEET 11

TO FOUNTAIN

M.E.C. NO. 2 PAD (4" THK.)

TABLE

INSTRUMENT PANEL PAD (4" THK.)

FURR-IN VENT MOTOR / CONTROL ROOM

LAB TABLE

250 CFM 9X9 C.D. (TYP.)

1" METER

2" W.& 1 1/2" V.T.R.

1" P.V.C. CHLORINE SOLUTION TO 30" SUCTION HEADER (P.V.C. BALL VALVE AT FEED POINT.)

EXISTING DOOR TO BE REMOVED. OPENING TO BE CLOSED W/CONC. BLOCK

BRONZE TABLE SEE SHT 9 FROM POOL (SEE SHT. 4)

4" WASTE DRAIN LINE

CONT. ON SHEET NO. 3

SUMP PUMP 1 HP KENCO MODEL 65 O/E

ELEV. 6.08

DEFLECT JOINTS TO MATCH ELEV.

30 X 30 X 18 TEE

EXISTING 16" TO METER (TO BE REMOVED)

6'-0" 3'-0" 5'-0"

1 1/2 P.V.C. CHLORINE SOLUTION

CHLORINE SOLUTION FEED POINT ABOVE FIN. GRADE IN PUMP DISCH. HEADER TEE (P.V.C. BALL VALVE AT FEED POINT)

CONC. SUPPORTS UNDER 1/4 BEND

18" TO NEW STORAGE TANK ℄ ELEV. 6.08

14" FLOW TUBE

EXISTING 16" TO BE REMOVED

EXIST 500 GPM PUMP TO BE RELOCATED

NEW BLIND FLANGE

CONNECT EXIST 4" PLUMBING DRAIN

NEW SOLIDS CONTACT UNIT

EXISTING SUPPORTS AND 500 GAL. FUEL OIL STOR. TANK TO BE RELOCATED NEAR EXISTING WELL NO. 1

REMOVE EXISTING PIPE SUPPORT BELOW GRADE

EXISTING RECARBONATION LINE TO BE REMOVED. (SEE SHEET NO. 14)

REMOVE EXIST. BOTTLE GAS & PAD.

FILTER NO. ~~7~~

REMOVE EXIST. 10" BASE ELLS AND INSTALL NEW 10" ELLS & 10X12 INCREASERS (PROVIDE CONC. SUPPORTS) FILTER NO. ~~8~~ 9

FROM EXISTING SOFTENER

EXISTING 10" TO REMAIN

RELOCATE PIPING & EXIST. WATER METER & BOX OUT OF NEW PATIO AREA

FILTER NO. ~~8~~

REMOVE EXISTING 10" PIPE SPOOL PROVIDE 2 NEW 10" BLIND FLANGES

FILTER NO. ~~7~~ 10

PROVIDE NEW 4" CONC. BLOCK BAFFLE 5'-0" HIGH IN CLEARWELL BELOW. (SHOWN SHADED)

CHLORINE ROOM (REMOVE EQUIP.)

REMOVE EXIST. WALLS

16" MAIN TO BE REMOVED

RECARB. EQUIP. TO BE REMOVED

EXISTING WASH WATER PUMP TO REMAIN

EXISTING 1,500 GPM PUMP TO BE RELOCATED

P-4

REMOVE PUMPS, PIPING, & ALL EQUIPMENT TO STORAGE AREA IN NEW BUILDING OR AS DIRECTED BY OWNER

EXISTING TRANSFER PUMPS TO REMAIN

EXISTING TRANSFER PIPING TO REMAIN

EXISTING 16" FROM STORAGE TANK

CONT. ON SHEET NO. 3

NEW 30" FROM STORAGE TANK

ELEVATOR

REV. NO	DATE	DRWN	CHKD	REMARKS
0	7/67	RCB	ALM	

ADDITION TO WATER TREATMENT PLANT

CITY OF HALLANDALE
BROWARD COUNTY, FLORIDA

FIRST FLOOR PLAN

PHILPOTT, ROSS & SAARINEN, INC.
ENGINEERS
FORT LAUDERDALE, FLA.

DATE 7/67

REGISTERED ENGINEER NO 4017

SHEET 6 RD

6523

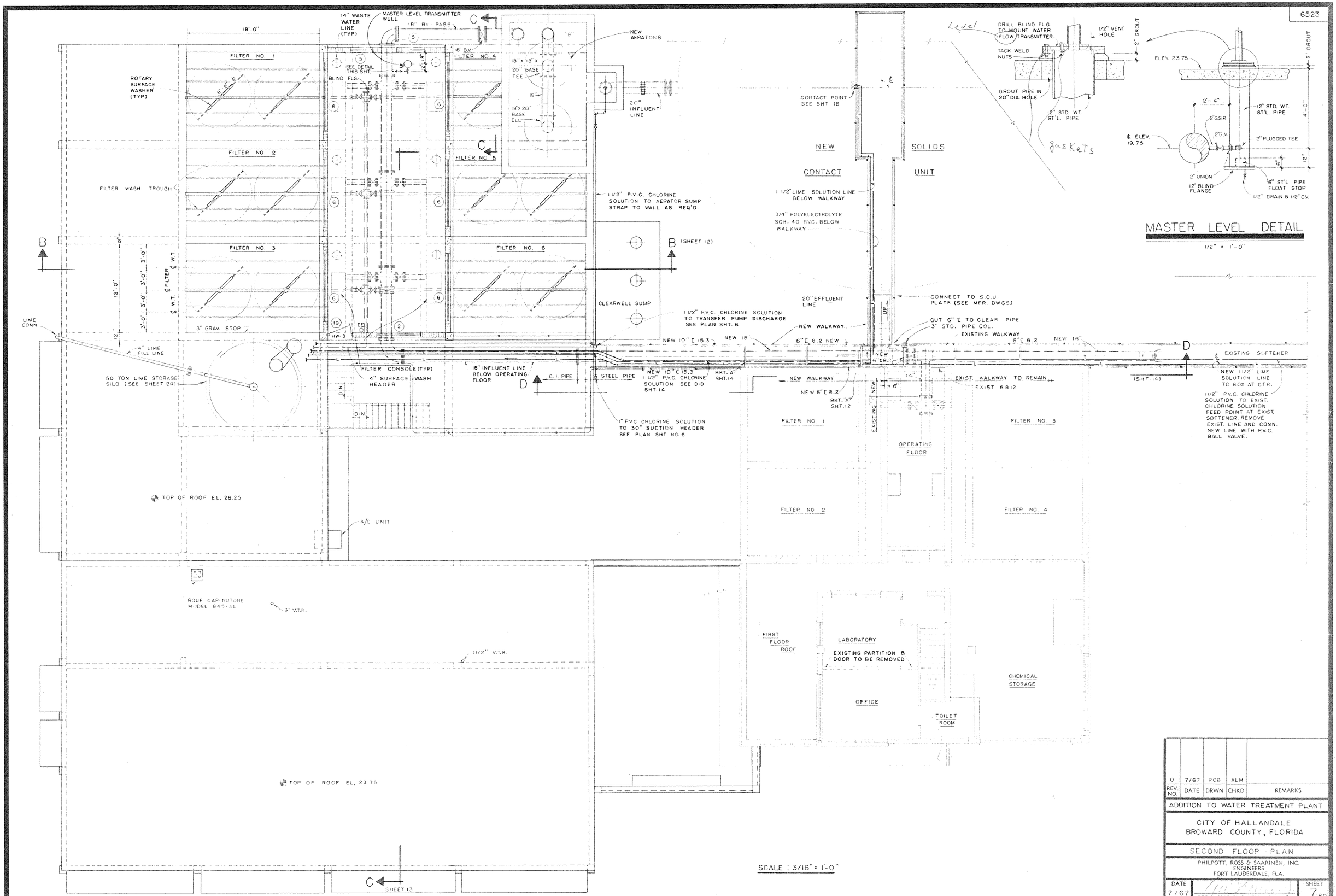

REV. NO.	DATE	DRWN	CHKD	REMARKS
0	7/67	RCB	ALM	

ADDITION TO WATER TREATMENT PLANT

CITY OF HALLANDALE
BROWARD COUNTY, FLORIDA

SECOND FLOOR PLAN

PHILPOTT, ROSS & SAARINEN, INC.
ENGINEERS
FORT LAUDERDALE, FLA.

DATE 7/67

REGISTERED ENGINEER NO. 4017

SHEET 7 RO

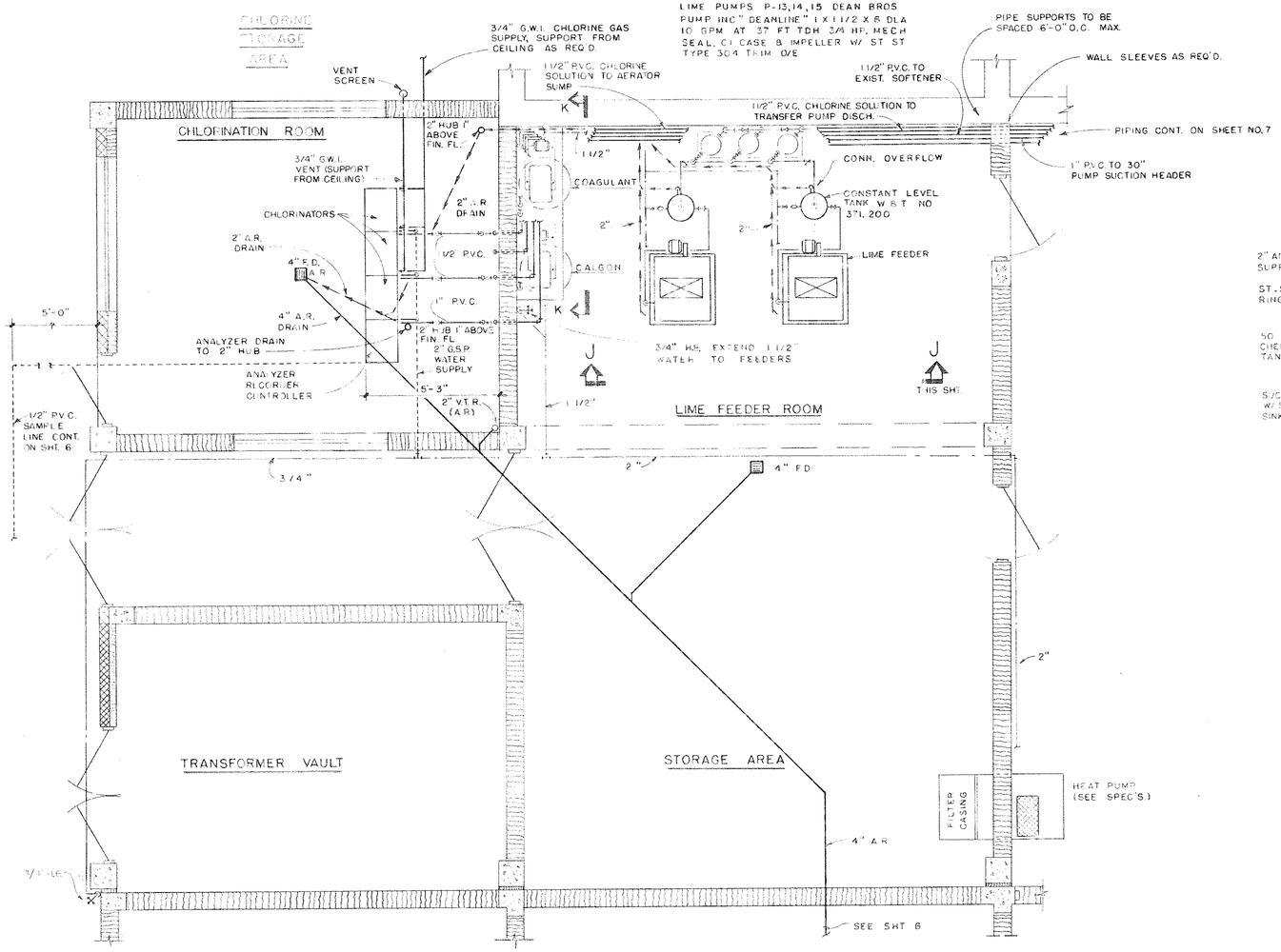

ENLARGED FLOOR PLAN

3/8" = 1'-0"

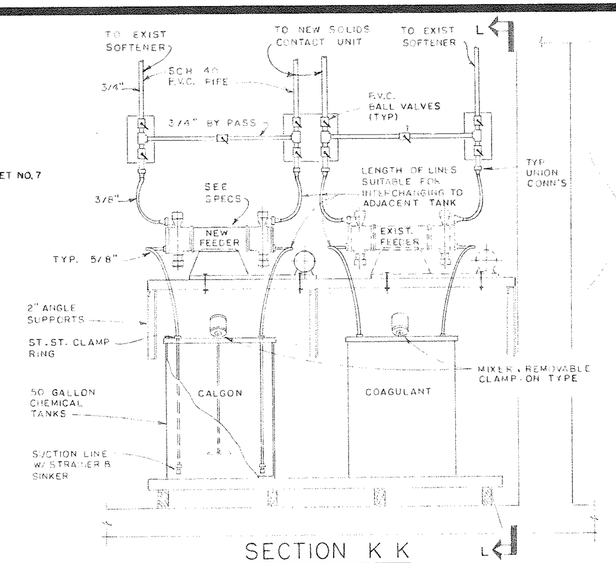

SECTION K K

3/4" = 1'-0"

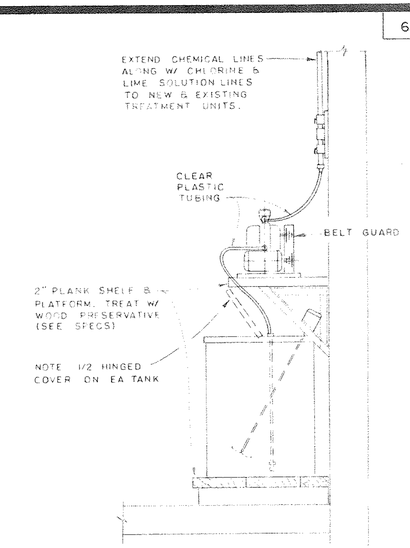

SECTION L L

3/4" = 1'-0"

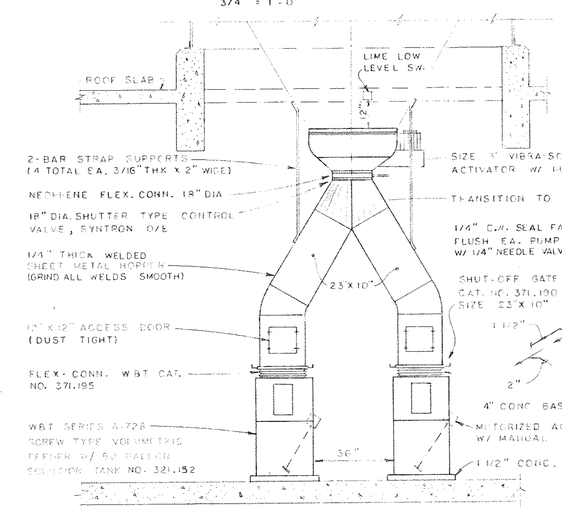

SECTION J-J

3/8" = 1'-0"

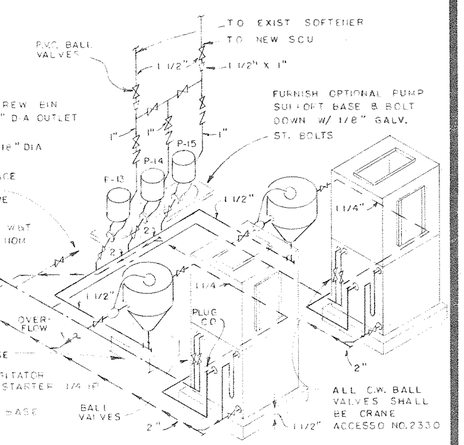

SCHEMATIC DIAGRAM

LIME SYSTEM

NO SCALE

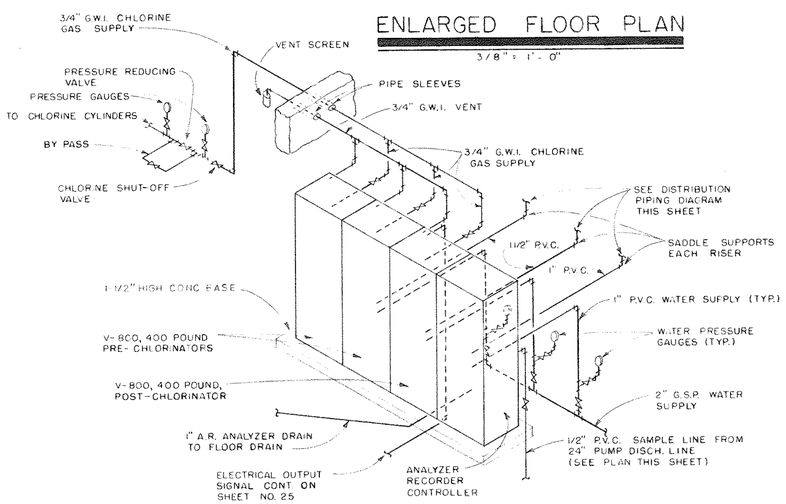

SCHEMATIC DIAGRAM - CHLORINATION SYSTEM

NO SCALE

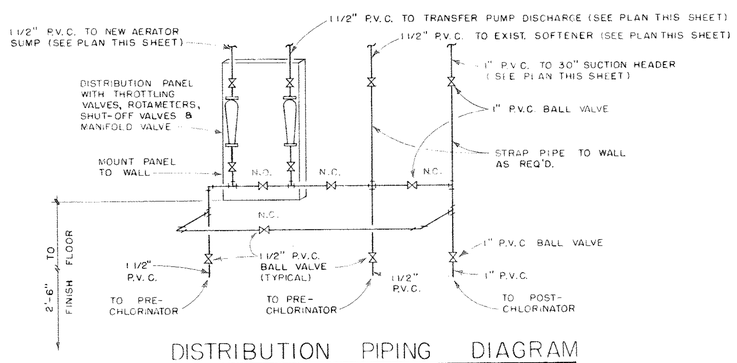

DISTRIBUTION PIPING DIAGRAM

NO SCALE

REV NO.	DATE	DRWN	CHKD	REMARKS
0	6/67	RCB	ALM	

ADDITION TO WATER TREATMENT PLANT

CITY OF HALLANDALE
BROWARD COUNTY, FLORIDA

ENLARGED FLOOR PLAN

PHILPOTT, ROSS & SAARINEN, INC.
ENGINEERS
FORT LAUDERDALE, FLA.

DATE 7/67

REGISTERED ENGINEER NO. 4017

SHEET 8 RO

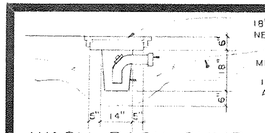

WASH RACK SUMP

3/8" = 1'-0"

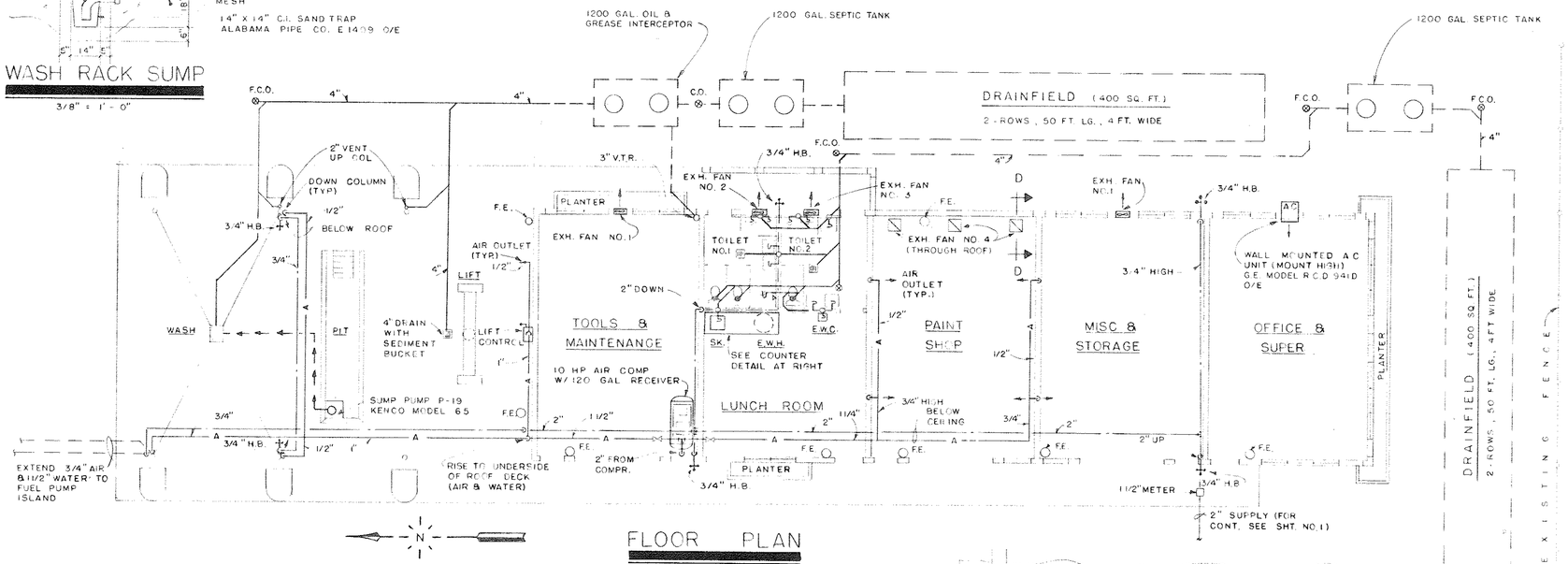

FLOOR PLAN

1/8" = 1'-0"

EXHAUST FAN SCHEDULE							
NO	MFR	MODEL	CFM	S.P.	RPM	BHP	REMARKS
1	COOL AIR	UD 104-H	590	1/8"	1600	0.02	2 REQUIRED
2	"	UD 74-H	370	0"	1600	0.02	
3	"	UD 84-H	450	1/10"	1600	0.02	
4	LOREN COOK	18 R 11 D	2280	5/8"	1140	1/2"	3 - REQUIRED *

* FAN MOTOR TO BE EXPLOSION PROOF

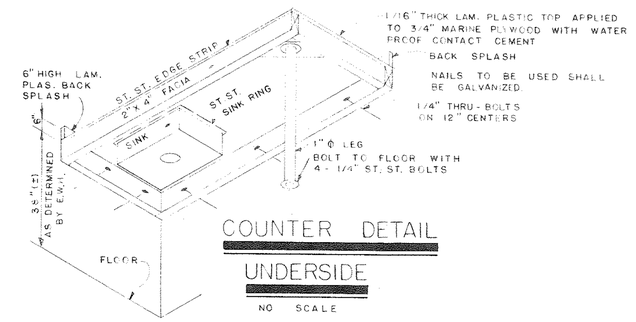

COUNTER DETAIL

UNDERSIDE

NO SCALE

FINISH SCHEDULE				
ROOM	FLOOR	WALL	CEILING	REMARKS
SERVICE AREA	BROOM FINISH		EXPOSED CONCRETE SLABS	
TOOLS & MAINT	MONOLITHIC	SKIMCOAT	EXPOSED CONCRETE SLABS	
LUNCH ROOM	MONOLITHIC	SKIMCOAT	EXPOSED CONCRETE SLABS	
PAINT SHOP	MONOLITHIC	SKIMCOAT	EXPOSED CONCRETE SLABS	
MISC & STORAGE	MONOLITHIC	SKIMCOAT	EXPOSED CONCRETE SLABS	
OFFICE & SUPER	V.N. RESIL. TILE & BASE	FURRED & GYP. PLAS.	EXPOSED CONCRETE SLABS	
TOILETS	CER. MOSAIC TILE & BASE	6 CER. MOS. WAINSCOAT SKIMCOAT ABOVE	EXPOSED CONCRETE SLABS	TILE SIMILAR TO SHEET 10

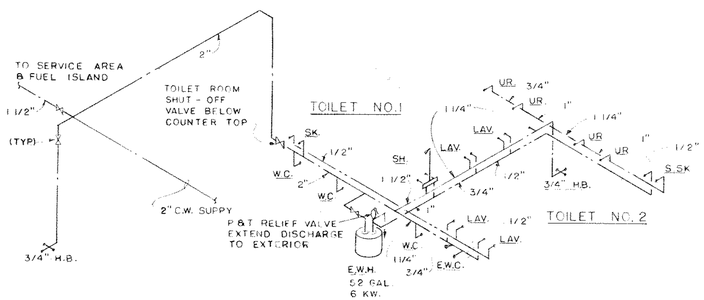

HOT & COLD WATER DIAGRAM

NO SCALE

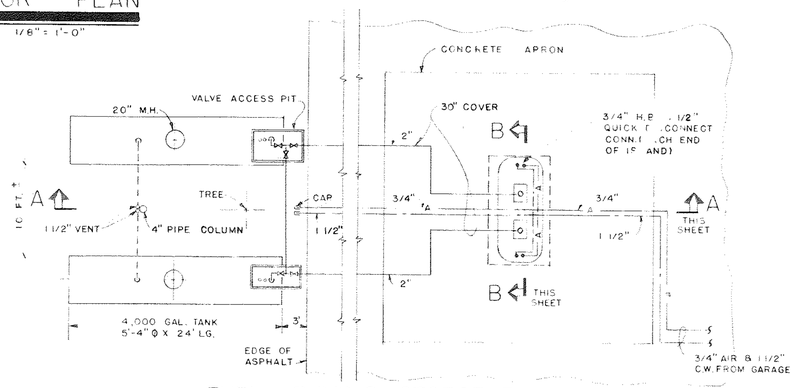

FUEL PUMP & STORGE TANK AREA

1/8" = 1'-0"

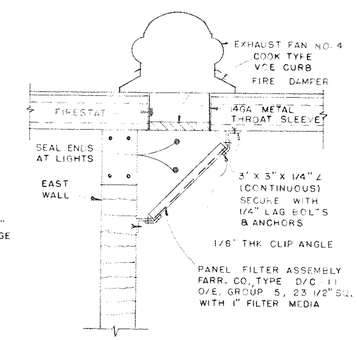

SECTION D - D

NO SCALE

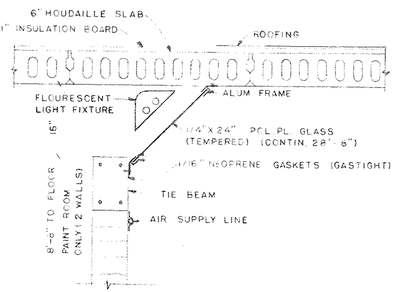

SECTION THRU GAS - TIGHT

LIGHTING ENCLOSURE

3/4" = 1'-0"

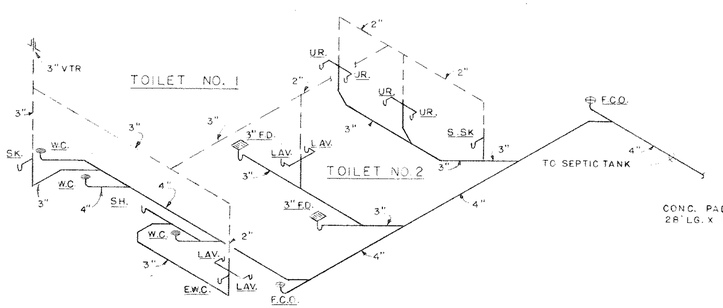

TOILET ROOM DRAINAGE DIAGRAM

NO SCALE

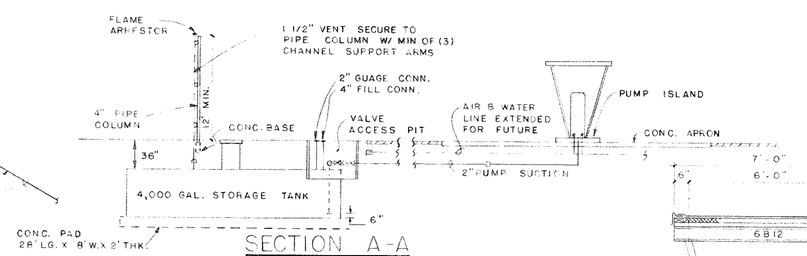

SECTION A - A

1/8" = 1'-0"

NOTE FOR ADDITIONAL TANK DETAILS SEE SHT. 17

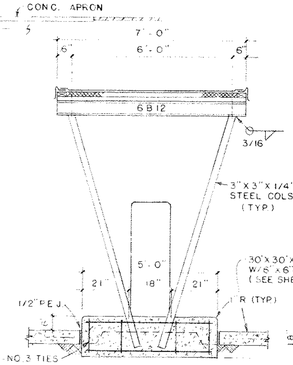

SECTION C - C

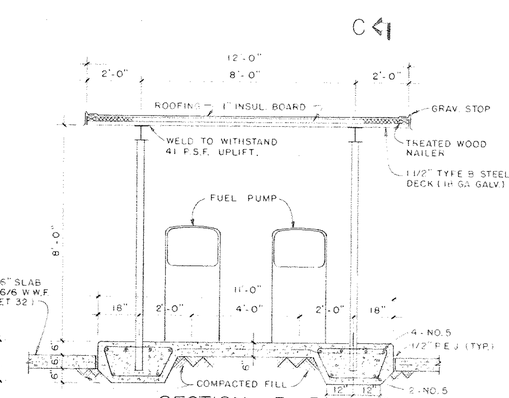

SCALE - 3/8" = 1'-0"

SECTION B - B

WINDOW SCHEDULE				
MK	NO RQD	SIZE	TYPE	REMARKS
7	7	2 - 3'-1" X 4'-2 5/8"	ALUM AWNING	NARROW VENT 24 N
8	3	3 - 3'-1" X 4'-2 5/8"	"	"

DOOR SCHEDULE			
MK	SIZE	DESCRIPTION	REMARKS
23	(3) 10'-0" X 8'-6"	ST'L. ROLLING	
24 26 27	2'-6" X 7'-0" X 1 3/4"	STEEL FLUSH	HALF GLASS BOT. LOUVER G3 AC
25 28	3'-0" X 7'-0" X 1 3/4"	" "	" "
30 31	2'-6" X 7'-0" X 1 3/4"	" "	LOWER LOUVER TYPE "L"
29	2'-6" X 6'-8" X 1 3/4"	" "	" "

REV NO.	DATE	DRWN	CHKD	REMARKS
0	7/67	RCB	ALM	

ADDITION TO WATER TREATMENT PLANT

CITY OF HALLANDALE
BROWARD COUNTY, FLORIDA

PLUMBING & MISC. SCHEDULES

PHILPOTT, ROSS & SAARINEN, INC.
ENGINEERS
FORT LAUDERDALE, FLA.

DATE 7-67

REGISTERED ENGINEER NO. 4017

SHEET 36

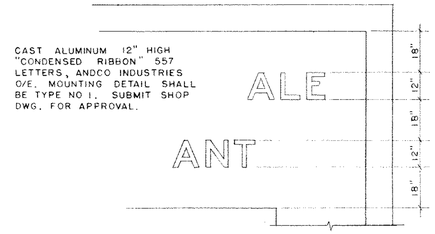

SIGN DETAIL

NO SCALE

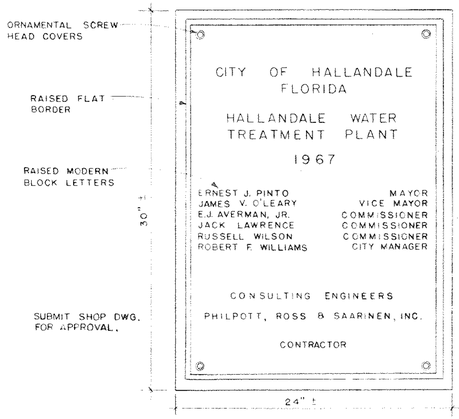

BRONZE TABLET

NO SCALE

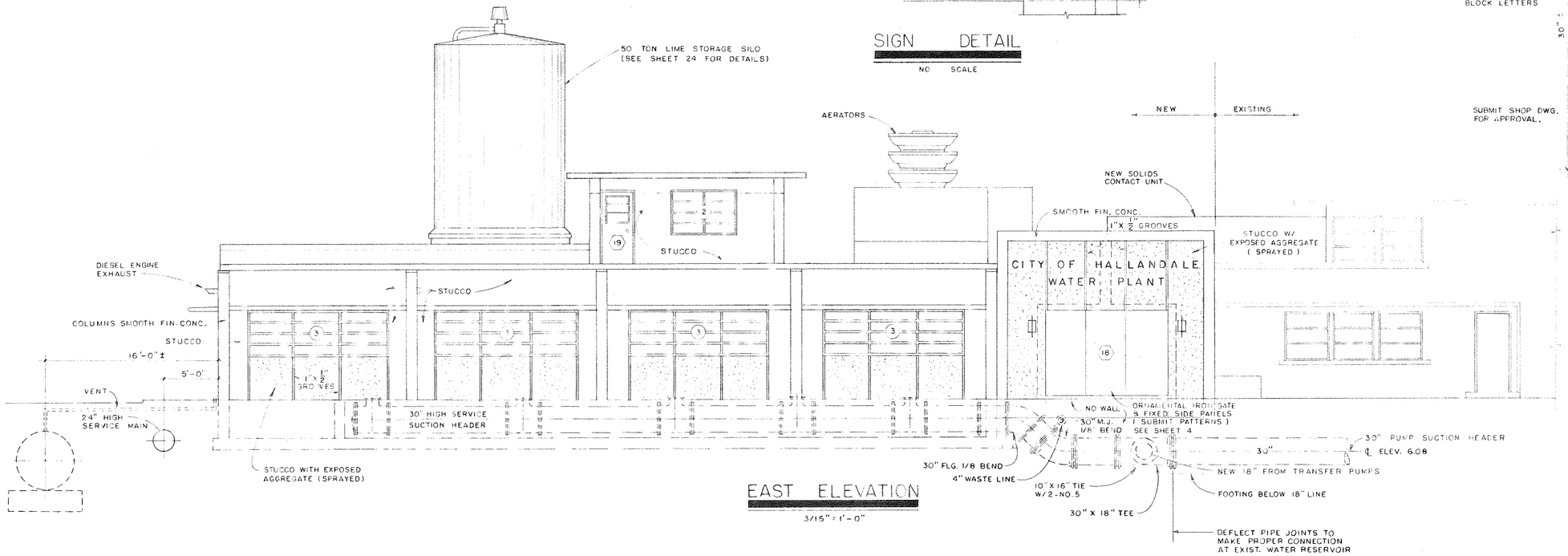

EAST ELEVATION

3/15" = 1'-0"

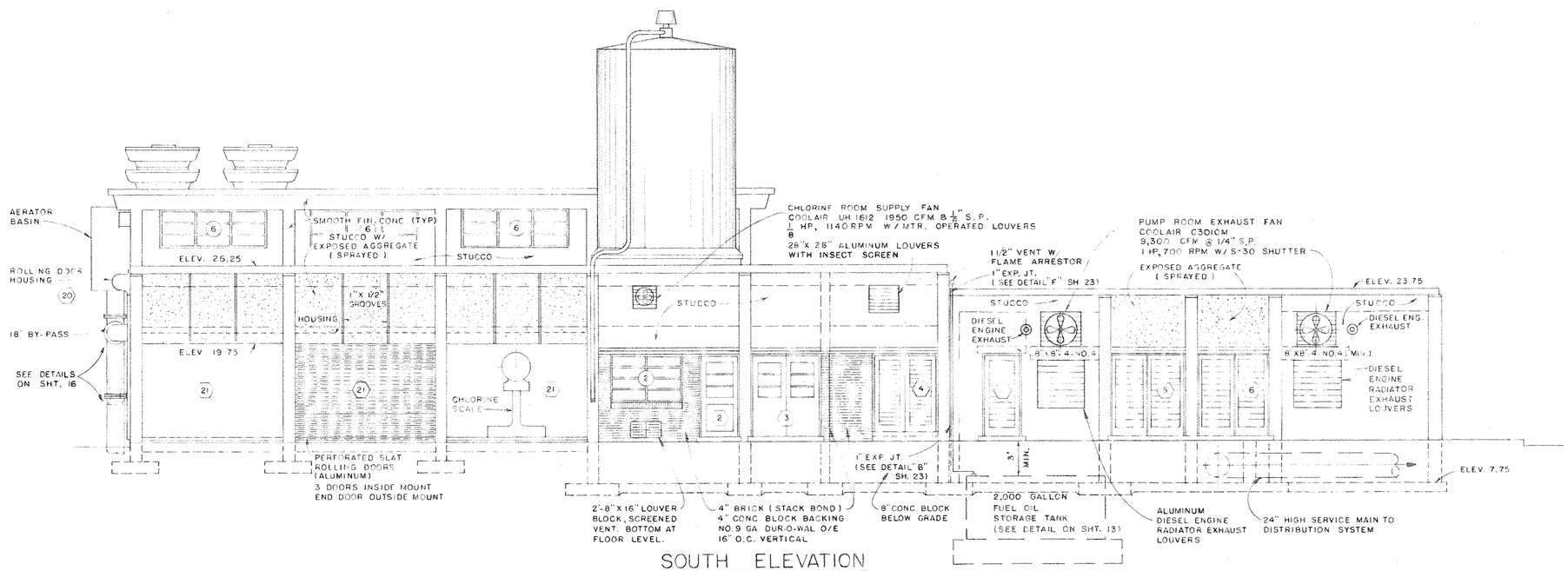

SOUTH ELEVATION

3/16" = 1'-0"

REV NO	DATE	DRWN	CHKD	REMARKS
0	7/67	RCB	OL	

ADDITION TO WATER TREATMENT PLANT

CITY OF HALLANDALE
BROWARD COUNTY, FLORIDA

EXTERIOR ELEVATIONS

PHILPOTT, ROSS & SAARINEN, INC.
ENGINEERS
FORT LAUDERDALE, FLA.

DATE 7/67

REGISTERED ENGINEER NO. 4017

SHEET 9 RO

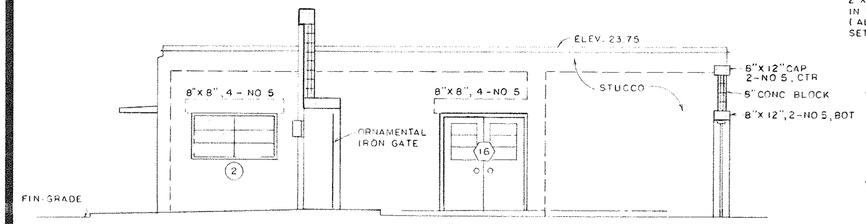

PUMP HOUSE - NORTH ELEVATION

3/16" = 1'-0"

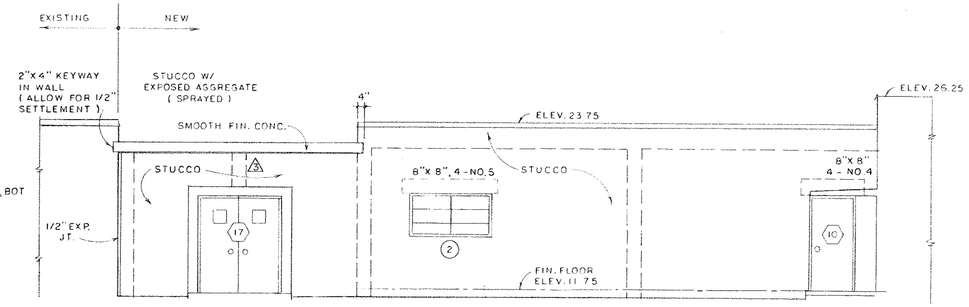

PUMP HOUSE - WEST ELEVATION

3/15" = 1'-0"

DOOR SCHEDULE

MARK	SIZE	TYPE	REMARKS
1	3'-0"X 7'-0" X 1 3/4"	MET LOUV. W/SCREEN	FULL LOUVER - TYPE FL
2	3'-0" X 7'-0" X 1 3/4"	METAL FLUSH	HALF GLASS - TYPE G 3
3	2 - 3'-0"X 7'-0" X 1 3/4"	METAL FLUSH	HALF GLASS - TYPE G 3
4	2 - 2'-6"X 5'-8" X 1 3/4"	MET. LOUV. W/SCREEN	PER F.P. & L. CO. DWG C-17115
5	2 - 3'-0" X 7'-0" X 1 3/4"	"	FULL LOUVER - TYPE FL
6	2 - 3'-0" X 7'-0" X 1 3/4"	"	FULL LOUVER - TYPE FL
7	2 - 3'-0" X 7'-0" X 1 3/4"	METAL FLUSH	HALF GLASS - TYPE G3 DOUBLE ACTING
8	3'-0" X 7'-0" X 1 3/4"	"	HALF GLASS - TYPE G3
9	3'-0" X 7'-0" X 1 3/4"	"	HALF GLASS - TYPE G 3
10	3'-0" X 7'-0" X 1 3/4"	"	HALF GLASS - TYPE G 3
11	2'-8" X 7'-0" X 1 3/8"	"	TYPE F
12	2'-6" X 5'-8" X 1 3/8"	"	LOWER LOUVER 12"X 20" TYPE L
13	2'-6" X 5'-8" X 1 3/8"	"	LOWER LOUVER 12"X 20" TYPE L
14	3'-0" X 7'-0" X 1 3/4"	"	TYPE V - 1" TWIN GLASS
15	3'-0" X 7'-0" X 1 3/4"	"	TYPE V - 1" TWIN GLASS
16	2 - 2'-6" X 7'-0" X 1 3/4"	"	HALF GLASS - TYPE G 3
17	2 - 3'-0" X 7'-0" X 1 3/4"	"	GLASS LITE 10" X 10" TYPE V
18	SEE DWGS	ORNAMENTAL IRON	SUBMIT PATTERNS
19	3'-0" X 7'-0" X 1 3/4"	METAL FLUSH	HALF GLASS TYPE G 3
20	15'-0" X 13'-0"	ROLLING DOOR	PERFORATED ALUMINUM
21	(3) 12'-0" X 8'-9"	ROLLING DOOR	PERFORATED ALUMINUM

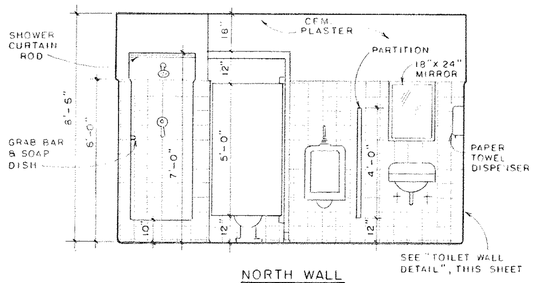

NORTH WALL

TOILET ROOM

3/8" = 1'-0"

FINISH SCHEDULE

ROOM	FLOOR	BASE	WALLS	WAINSCOT	CEILING	REMARKS
MOTOR CONTROL ROOM	RESILIENT TILE	RESILIENT	* GYPSUM PLASTER		SUSPENDED ACOUSTIC TILE (2' X 4')	* OUTSIDE WALLS FURRED
FILTER OPERATING ROOM	RESILIENT TILE	RESILIENT	FURRED - GYPSUM PLASTER		EXPOSED CONCRETE SLABS	SEE NOTE 1.
TOILET ROOM	CERAMIC MOSAIC	CERAMIC TILE	CEMENT PLASTER ABOVE WAINSCOT	GLAZED CERAMIC TILE	SUSPENDED CEMENT PLASTER	WAINSCOT 6'-0" HIGH
JANITOR CLOSET	MONOLITHIC FINISH		CEMENT PLASTER		SUSPENDED GYPSUM PLASTER	
STORE ROOM	MONOLITHIC FINISH		SKIM COAT		EXPOSED CONCRETE SLABS	SEE NOTE 1.
PUMP ROOM	MONOLITH COLORED FINISH		SKIM COAT		EXPOSED CONCRETE SLABS	SEE NOTE 1.
CHLORINATOR ROOM	MONOLITHIC FINISH		SKIM COAT		EXPOSED CONCRETE SLABS	SEE NOTE 1.
TRANSFORMER VAULT	MONOLITHIC FINISH		EXPOSED CONCRETE BLOCK		EXPOSED CONCRETE SLABS	SEE NOTE 1.
LIME FEEDER & STORAGE	MONOLITHIC FINISH		SKIM COAT		POURED CONCRETE & PRECAST SLABS	SEE NOTE 1.
PIPE GALLERY	MONOLITHIC FINISH		SMOOTH CONCRETE		EXPOSED CONCRETE	
CHLORINE STORAGE	WOOD FLOAT FINISH		SMOOTH CONCRETE		EXPOSED CONCRETE SLABS	SEE NOTE 1.

NOTE: 1. POINT UP GROOVES BETWEEN PRECAST CONCRETE ROOF SLABS

WINDOW SCHEDULE

MARK	NO REQ	SIZE	TYPE	REMARKS
1	2	5'-0" X 4'-0"	GAS PROOF VIEW WINDOW	SEE DETAIL, THIS SHEET
2	4	2'-3 1/8" X 3'-2 3/8"	ALUM. AWNING	NARROW VENT 23 N
3	4	3'-4'-5 1/8" X 4'-2 5/8"	ALUM. AWNING	NARROW VENT 34 N
4	2	10'-0" X 4'-5"	SOUND RESIST. VIEW WINDOW	SEE DETAIL, THIS SHEET
5	2	3'-1" X 4'-2 5/8"	ALUM. AWNING	NARROW VENT 24 N
6	6	3'-3'-1" X 3'-2 3/8"	ALUM. AWNING	NARROW VENT 23 N

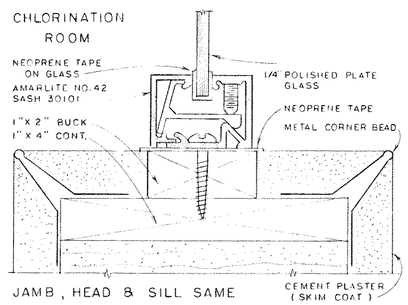

GAS PROOF VIEW WINDOW - 1

FULL SIZE

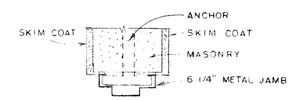

INTERIOR JAMB

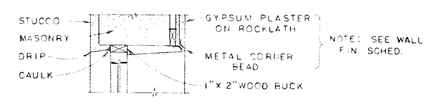

HEAD

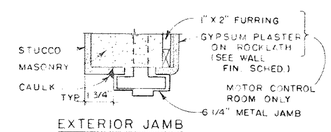

EXTERIOR JAMB

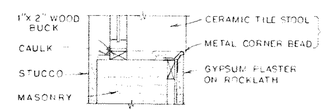

JAMB

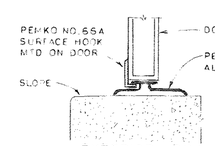

EXTERIOR SILL

DOOR DETAILS

NO SCALE

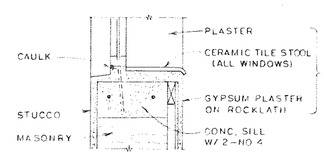

SILL

WINDOW DETAILS

1 1/2" = 1'-0"

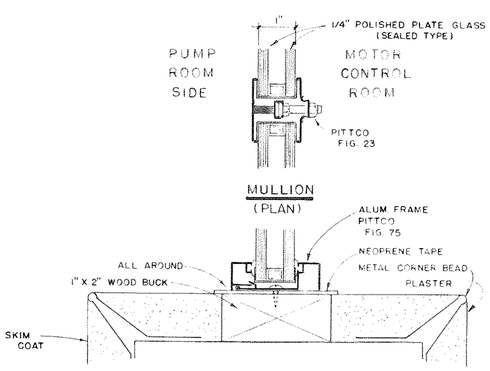

SOUND RESISTANT VIEW WINDOW 4

NO SCALE

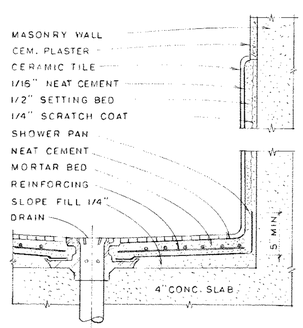

SHOWER STALL DETAIL

1 1/2" = 1'-0"

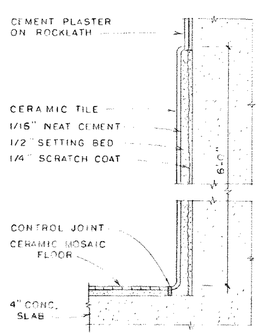

TOILET WALL DETAIL

1 1/2" = 1'-0"

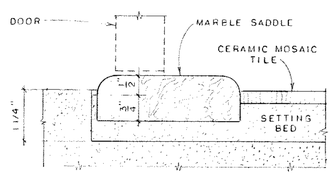

TOILET THRESHOLD DETAIL

NOT TO SCALE

REV NO	DATE	DRWN	CHKD	REMARKS
0	6/67	LS	OL	

ADDITION TO WATER TREATMENT PLANT

CITY OF HALLANDALE
BROWARD COUNTY, FLORIDA

ELEVATIONS AND DETAILS

PHILPOTT, ROSS & SAARINEN, INC.
ENGINEERS
FORT LAUDERDALE, FLA.

DATE 7/67

REGISTERED ENGINEER NO. 4017

SHEET 10 RO

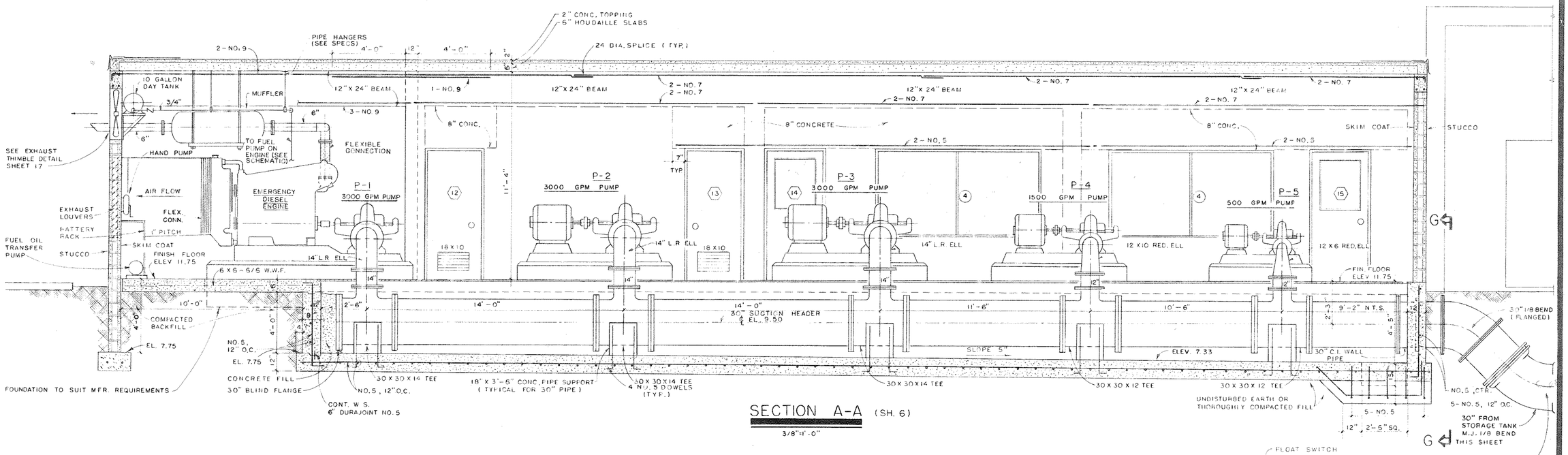

SECTION A-A (SH. 6)

3/8" = 1'-0"

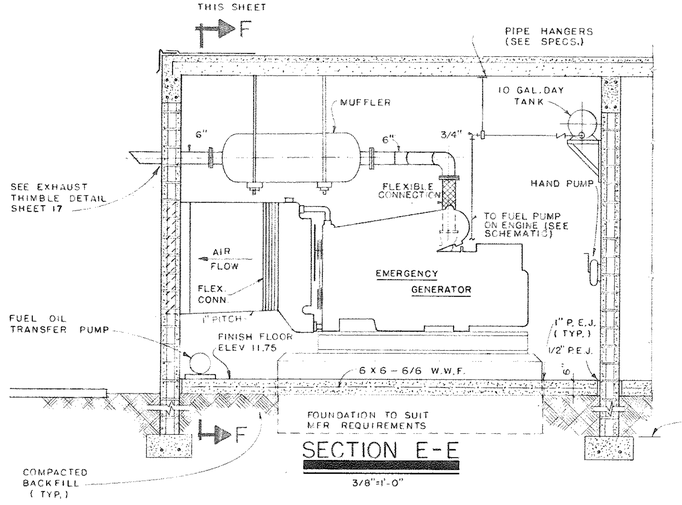

SECTION E-E

3/8" = 1'-0"

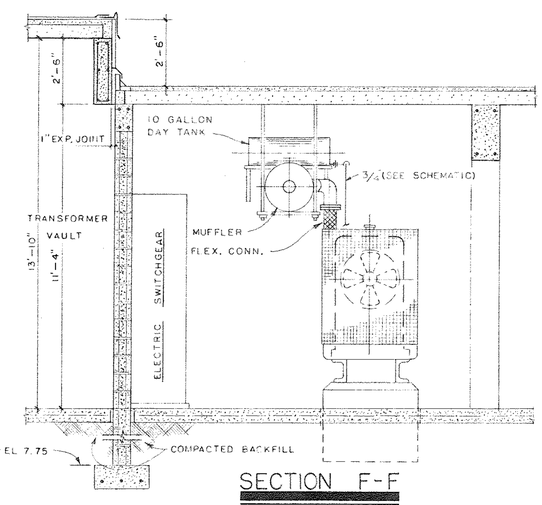

SECTION F-F

3/8" = 1'-0"

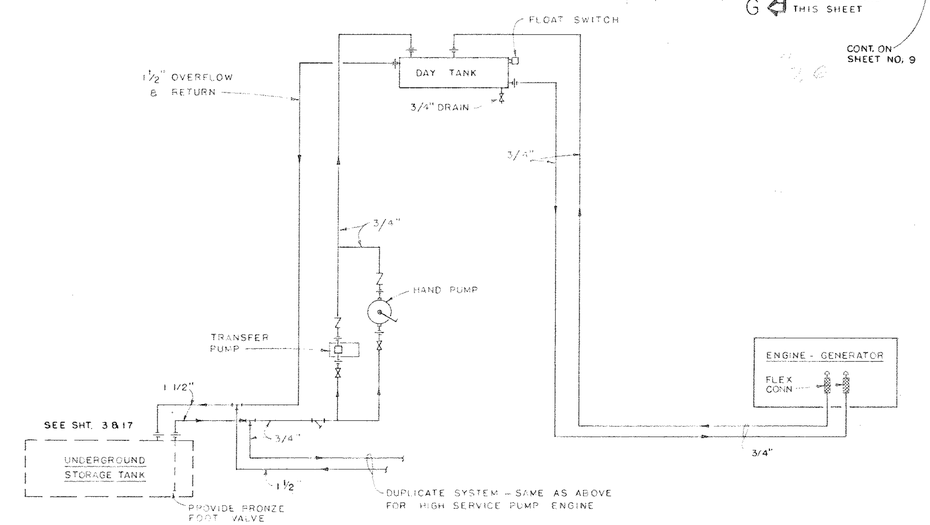

SCHEMATIC DIAGRAM - FUEL OIL PIPING

NO SCALE

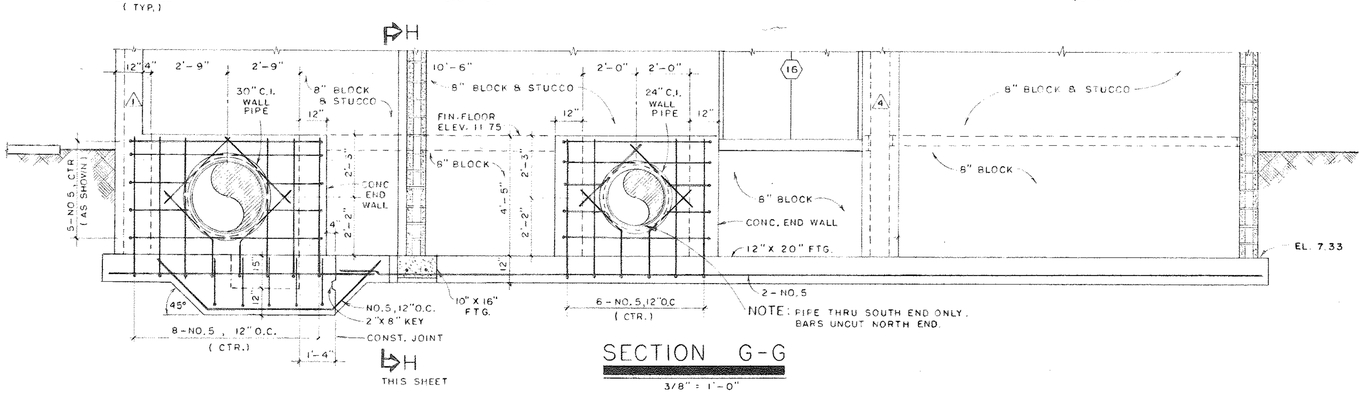

SECTION G-G

3/8" = 1'-0"

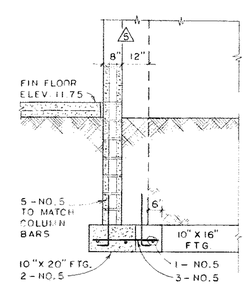

SECTION H-H

3/8" = 1'-0"

REV. NO.	DATE	DRWN	CHKD	REMARKS
0	7/67	RCB	ALM	

ADDITION TO WATER TREATMENT PLANT

CITY OF HALLANDALE
BROWARD COUNTY, FLORIDA

SECTIONS THROUGH PUMPROOM

PHILPOTT, ROSS & SAARINEN, INC.
ENGINEERS
FORT LAUDERDALE, FLA.

DATE 7/67

REGISTERED ENGINEER NO. 4017

SHEET 11 RO

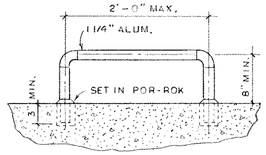

GRAB BAR DETAIL

1" = 1'-0"

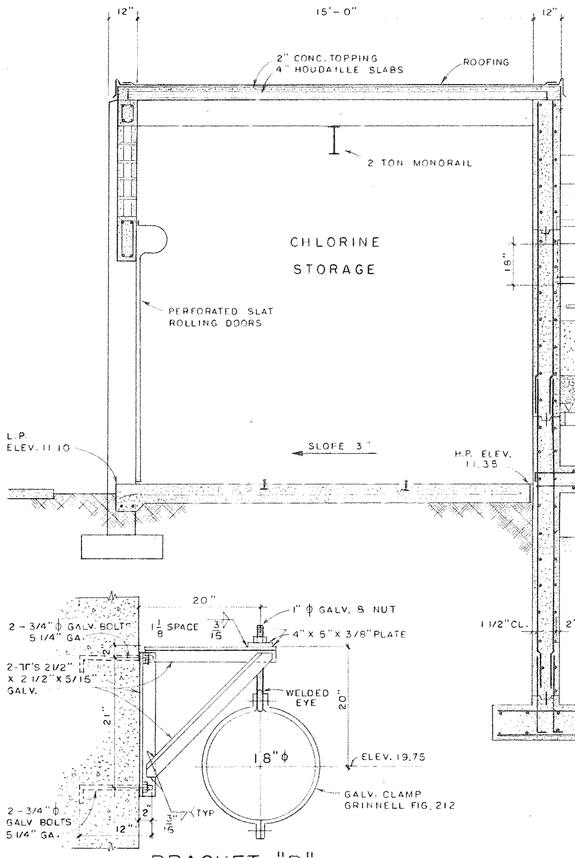

BRACKET "B"

1" = 1'-0"

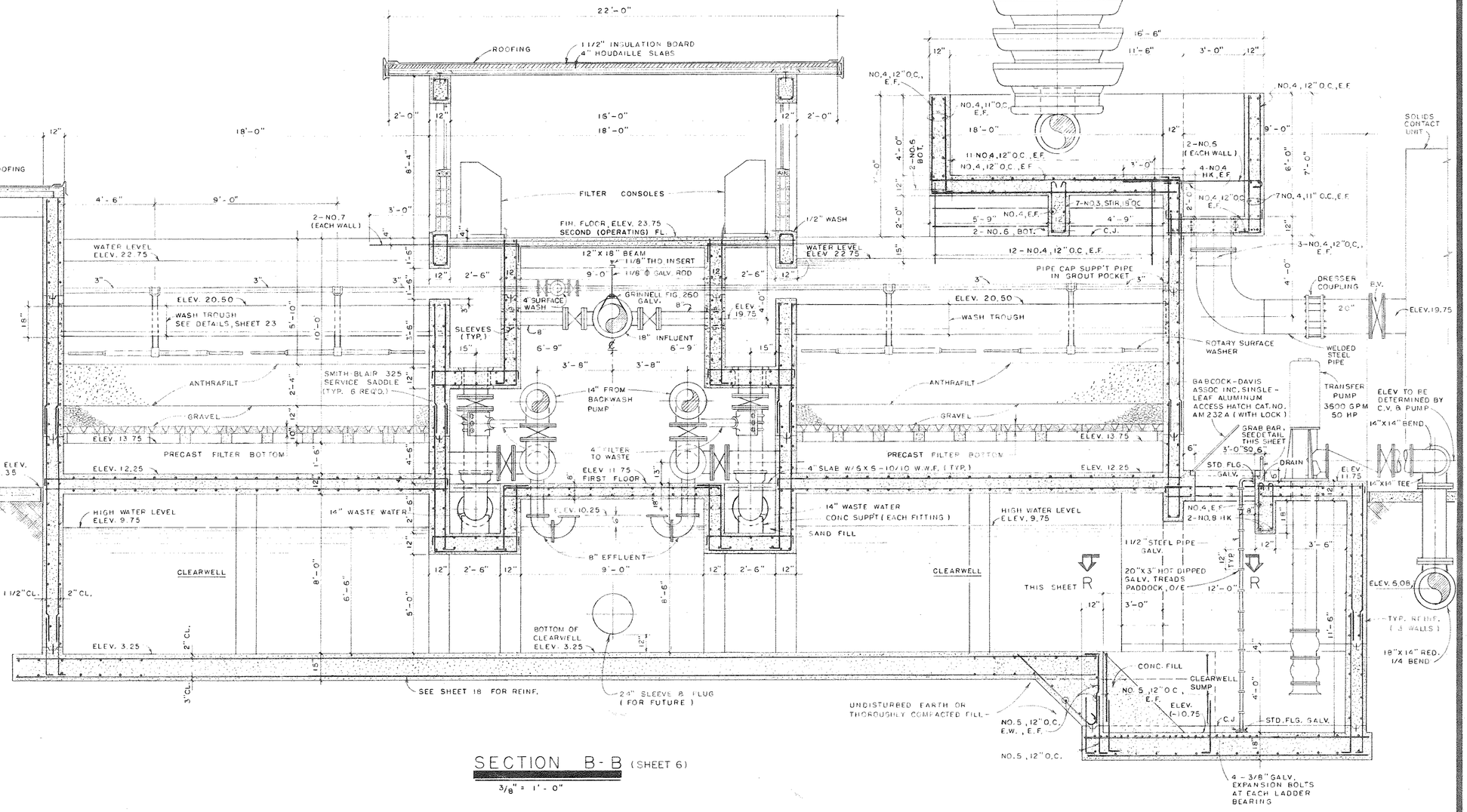

SECTION B-B (SHEET 6)

3/8" = 1'-0"

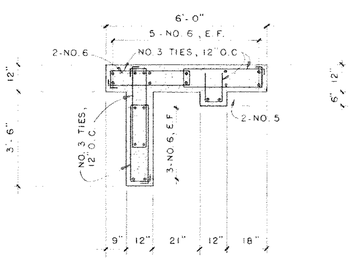

PIER 7

3/8" = 1'-0"

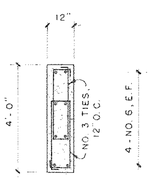

PIER 8

3/8" = 1'-0"

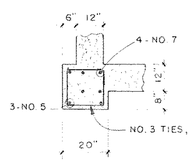

PILASTER 9

3/8" = 1'-0"

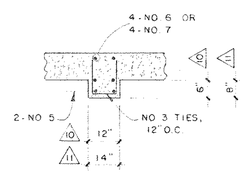

PILASTER 10 & 11

3/8" = 1'-0"

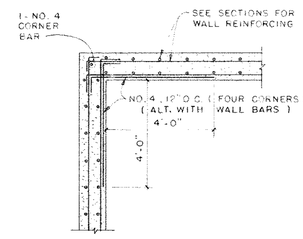

CORNER DETAIL

CLEARWELL

3/8" = 1'-0"

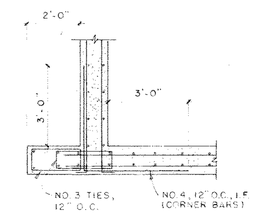

SECTION R-R

3/8" = 1'-0"

REV. NO.	DATE	DRWN	CHKD	REMARKS
0	7/67	O.L.	O.L.	

ADDITION TO WATER TREATMENT PLANT

CITY OF HALLANDALE
BROWARD COUNTY, FLORIDA

SECTION THROUGH FILTERS

PHILPOTT, ROSS & SAARINEN, INC.
ENGINEERS
FORT LAUDERDALE, FLA.

DATE 7/67 | REGISTERED ENGINEER NO. 4017 | SHEET 12 RO

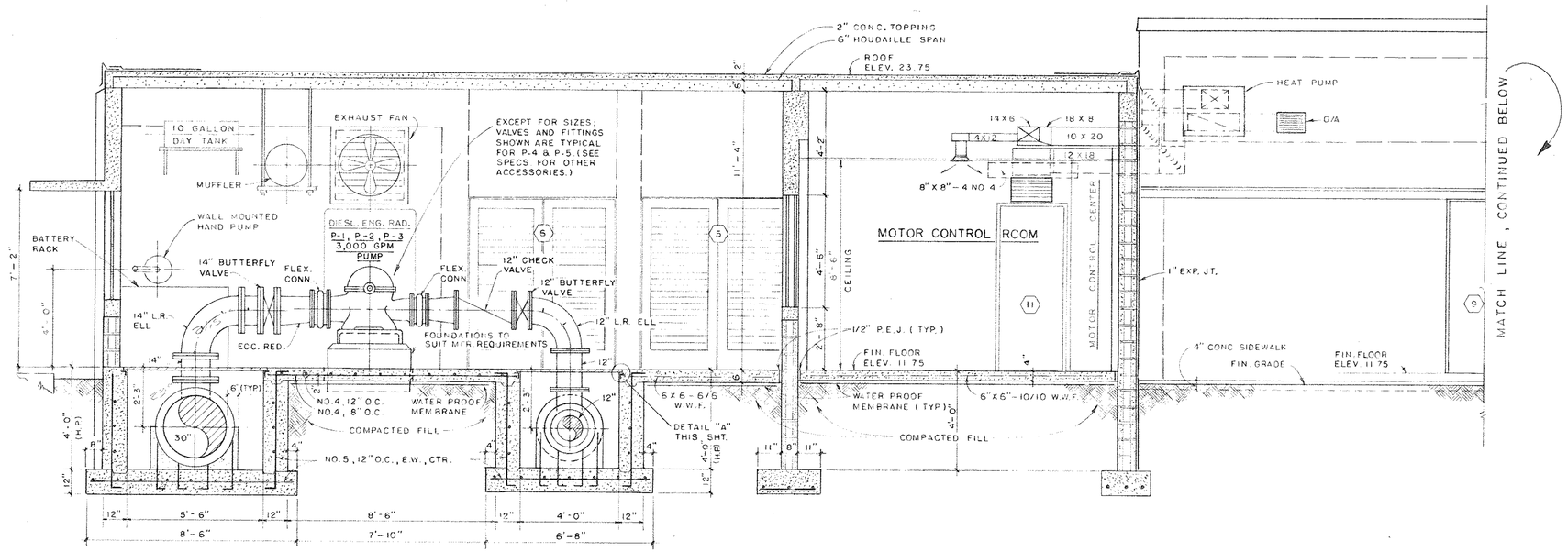

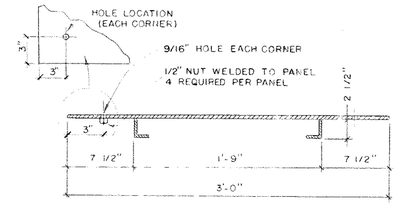

TYPICAL TRENCH COVER

1 1/2" = 1'-0"

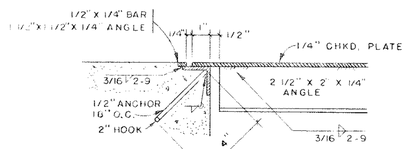

NOTE: GALVANIZE CURBS & PLATES.

TYPICAL CURB DETAIL "A"

3" = 1'-0"

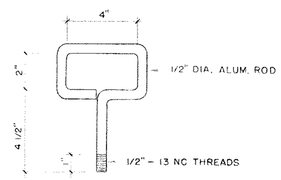

(4 REQ'D)

PANEL KEY

3" = 1'-0"

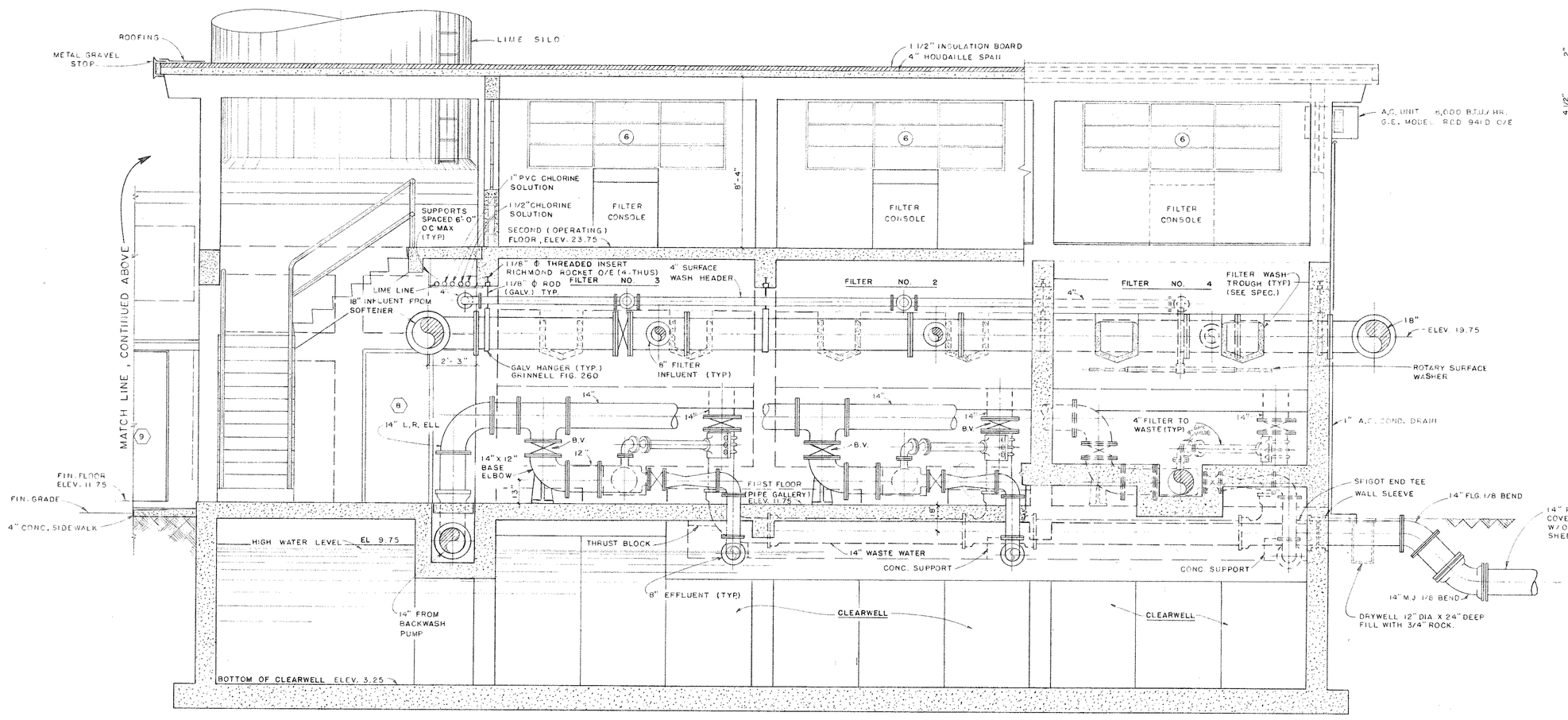

SECTION C-C

3/8" = 1'-0"

REV. NO.	DATE	DRWN	CHKD	REMARKS
0	7/67	RCB	ALM	

ADDITION TO WATER TREATMENT PLANT

CITY OF HALLANDALE
BROWARD COUNTY, FLORIDA

LONGITUDINAL SECTION THROUGH PLANT

PHILPOTT, ROSS & SAARINEN, INC.
ENGINEERS
FORT LAUDERDALE, FLA.

DATE 7/67

REGISTERED ENGINEER NO. 4017

SHEET 13 RO

NOTE: THE TOP OF THE NEW SOLIDS CONTACT UNIT IS TO BE MADE TO EXACTLY MATCH THE EXIST. SOFTENER.

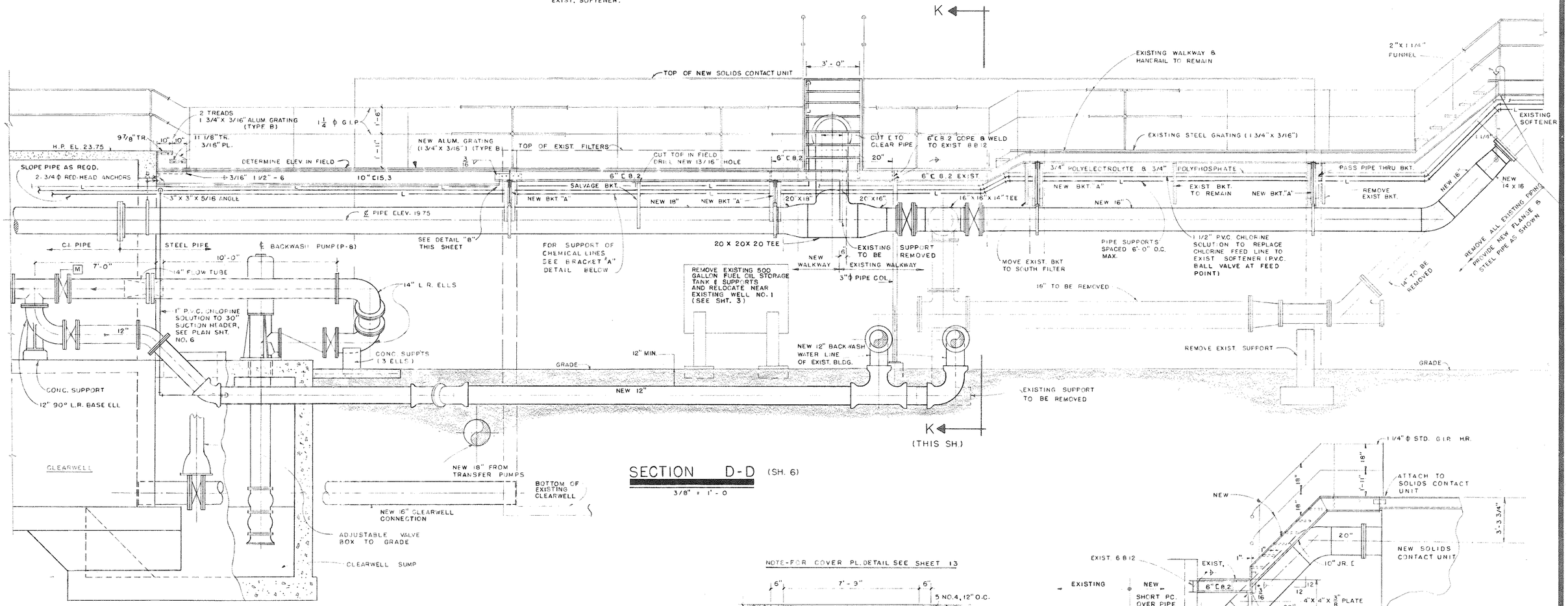

SECTION D-D (SH. 6)

3/8" = 1'-0

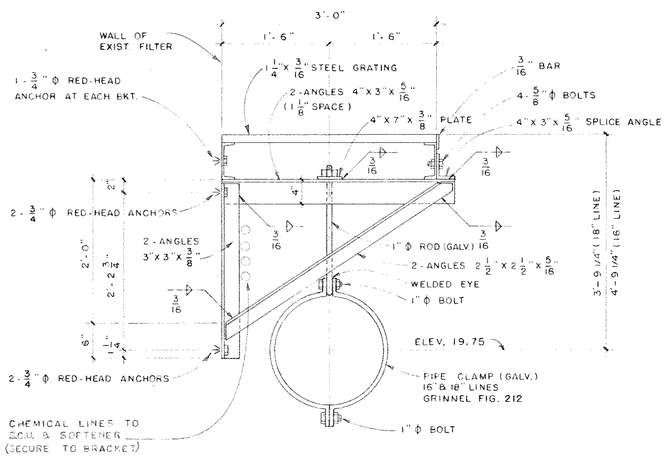

BRACKET "A"

(4 - REQ'D)

1" = 1'-0"

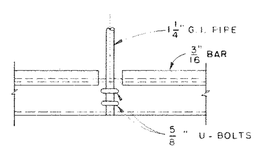

HANDRAIL DETAIL

1" = 1'-0"

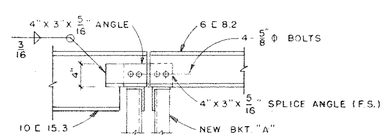

DETAIL "B"

1" = 1'-0"

NOTE-FOR COVER PL. DETAIL SEE SHEET 13

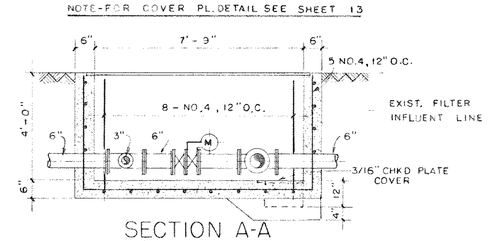

SECTION A-A

3/8" = 1'-0"

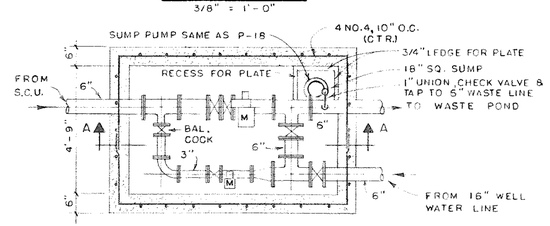

SLUDGE VALVE PIT DETAIL

3/8" = 1'-0"

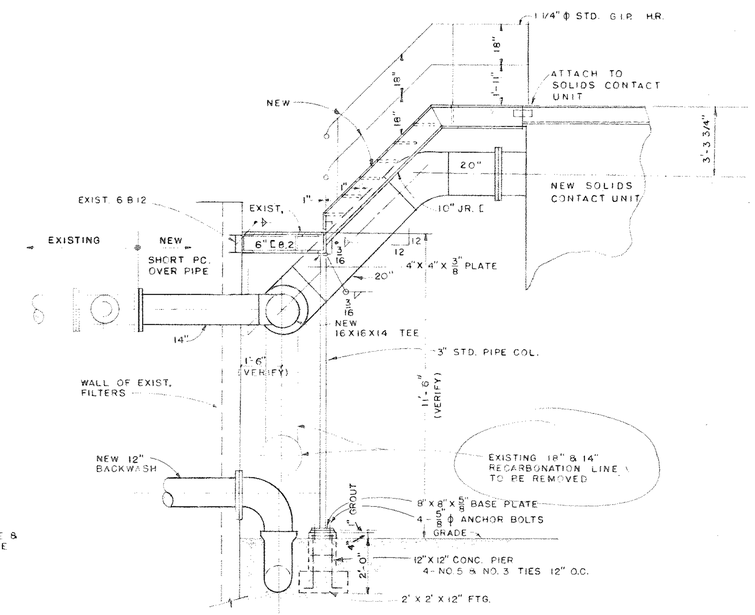

SECTION K-K

3/8" = 1'-0"

REV. NO.	DATE	DRWN	CHKD	REMARKS
0	7/67	RCB	ALM	

ADDITION TO WATER TREATMENT PLANT

CITY OF HALLANDALE
BROWARD COUNTY, FLORIDA

SECTION AT WALKWAY

PHILPOTT, ROSS & SAARINEN, INC.
ENGINEERS
FORT LAUDERDALE, FLA.

DATE 7/67

REGISTERED ENGINEER NO. 4017

SHEET 14 RO

6523

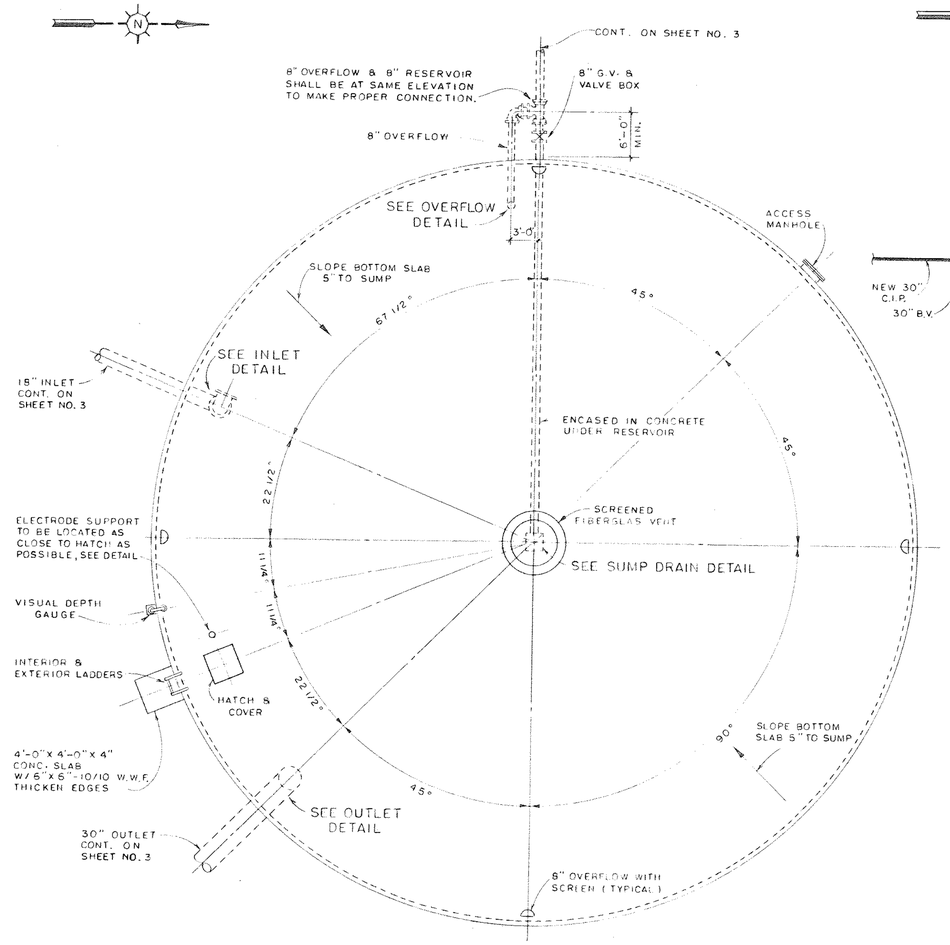

PLAN

1/8" = 1'-0"

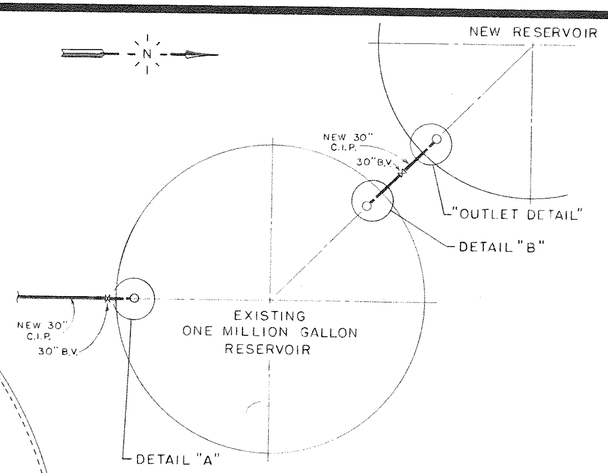

LOCATION PLAN

1" = 20'

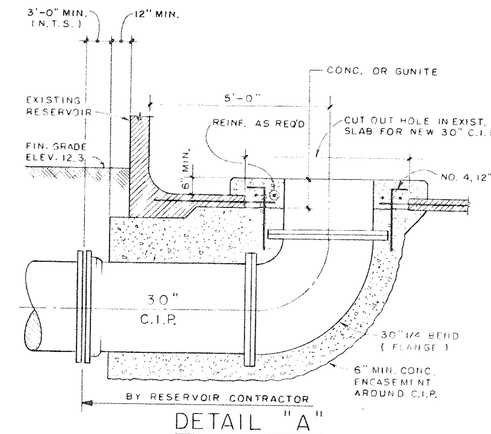

DETAIL "A"

1/2" = 1'-0"

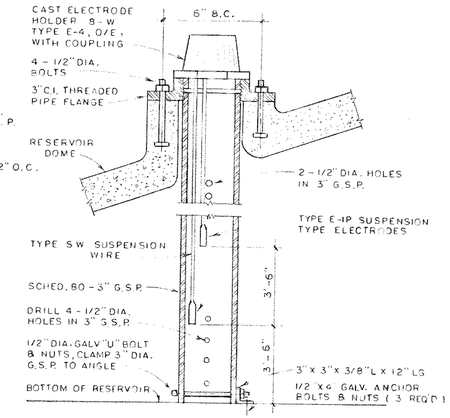

ELECTRODE SUPPORT DETAIL

NOT TO SCALE

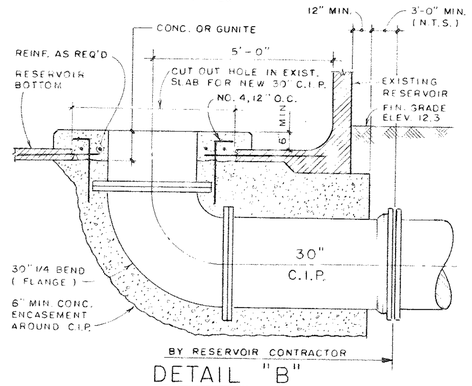

DETAIL "B"

1/2" = 1'-0"

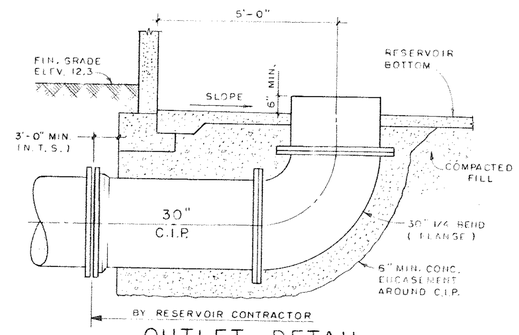

OUTLET DETAIL

1/2" = 1'-0"

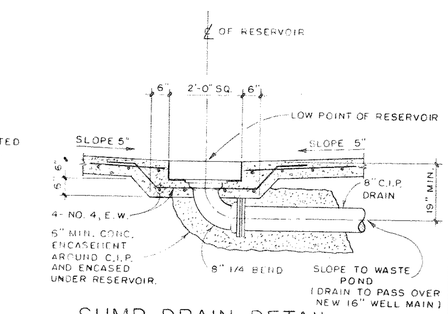

SUMP DRAIN DETAIL

1/2" = 1'-0"

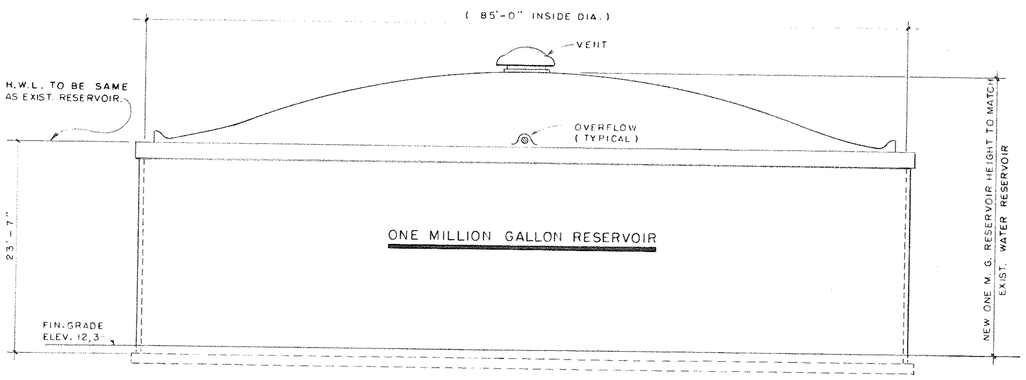

ELEVATION

1/8" = 1'-0"

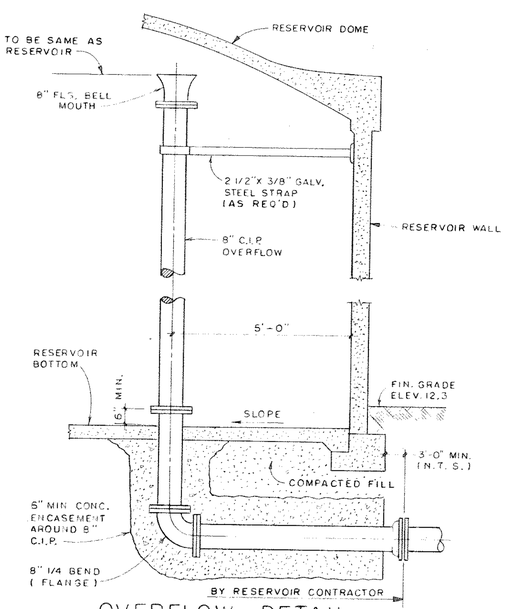

OVERFLOW DETAIL

1/2" = 1'-0"

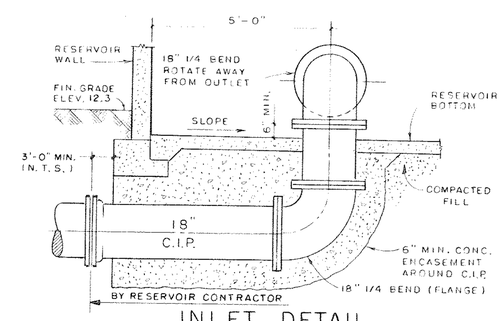

INLET DETAIL

1/2" = 1'-0"

REV NO.	DATE	DRWN	CHKD	REMARKS
0	7/67	L S	OL	

ADDITION TO WATER TREATMENT PLANT

CITY OF HALLANDALE
BROWARD COUNTY, FLORIDA

ONE MILLION GALLON RESERVOIR

PHILPOTT, ROSS & SAARINEN, INC.
ENGINEERS
FORT LAUDERDALE, FLA.

DATE 7/67

REGISTERED ENGINEER NO. 4017

SHEET 15 RO

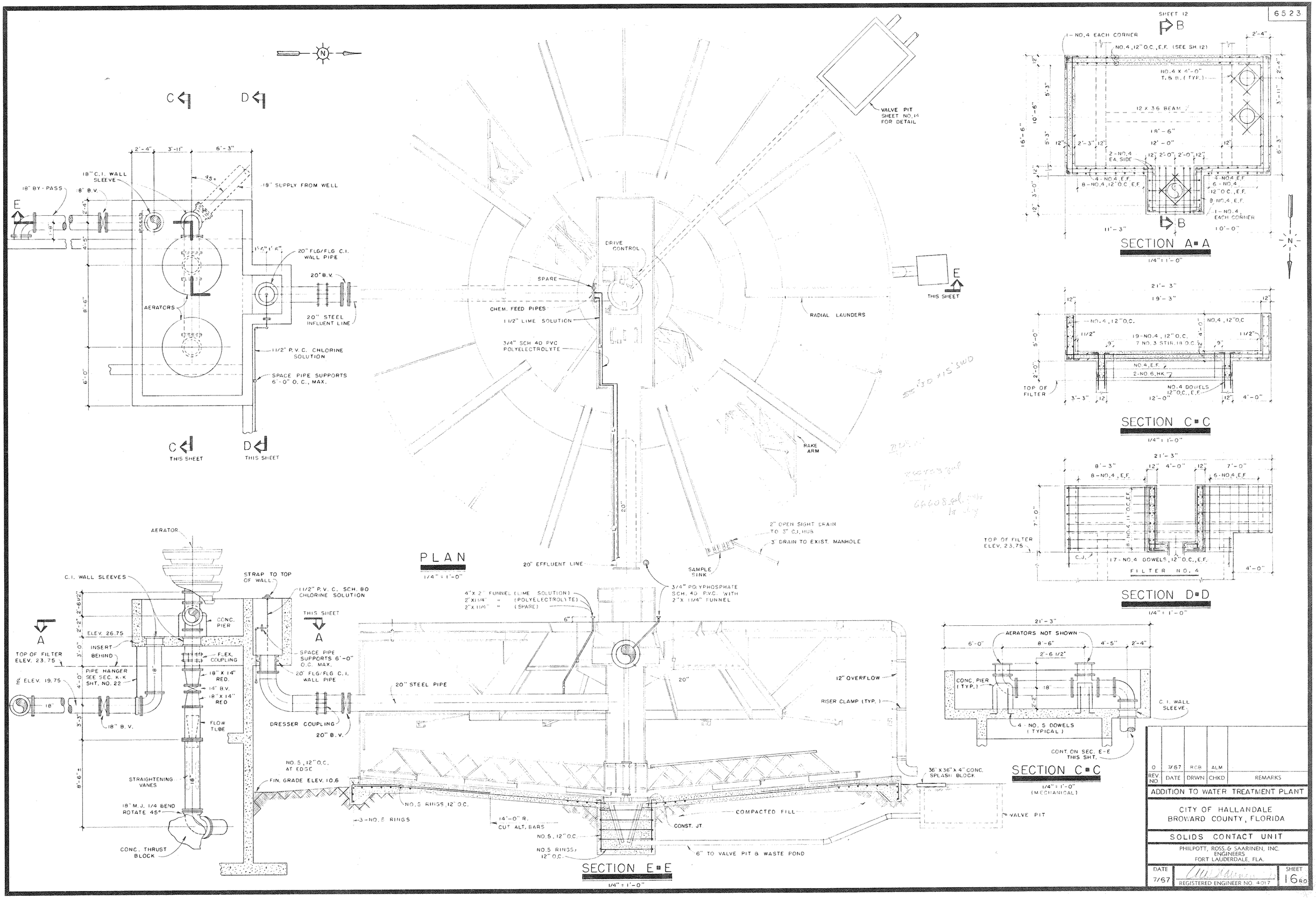

REV NO.	DATE	DRWN	CHKD	REMARKS
0	7/67	RCB	ALM	

ADDITION TO WATER TREATMENT PLANT

CITY OF HALLANDALE
BROWARD COUNTY, FLORIDA

SOLIDS CONTACT UNIT

PHILPOTT, ROSS & SAARINEN, INC.
ENGINEERS
FORT LAUDERDALE, FLA.

DATE 7/67 | REGISTERED ENGINEER NO. 4017 | SHEET 16 RO

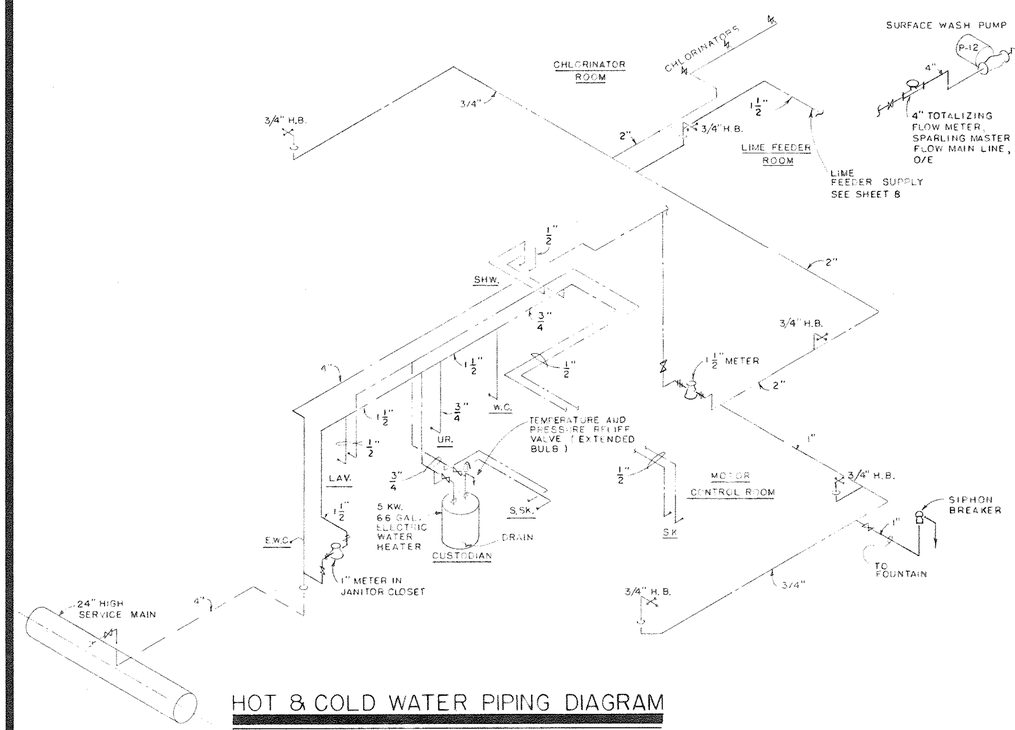

HOT & COLD WATER PIPING DIAGRAM

NO SCALE

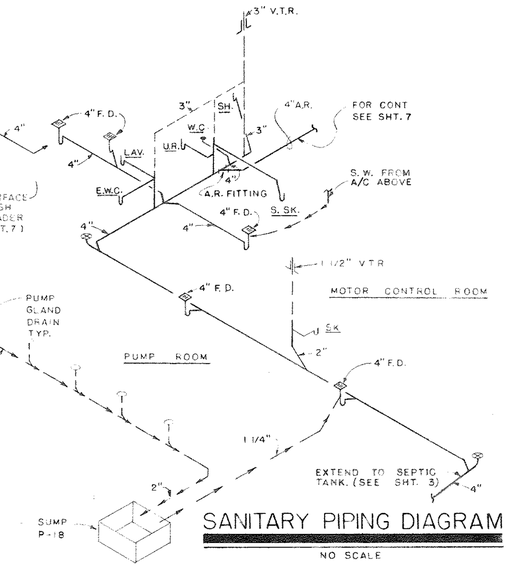

SANITARY PIPING DIAGRAM

NO SCALE

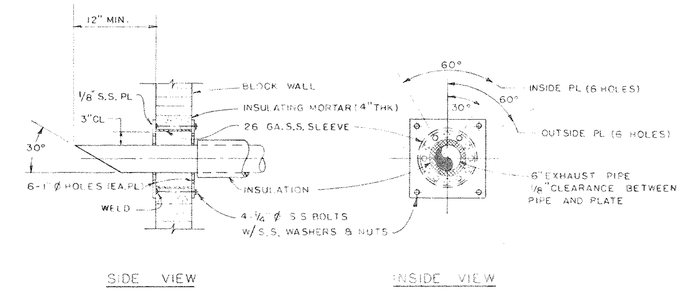

ENGINE EXHAUST VENTILATING THIMBLE

NO SCALE

PLUMBING FIXTURE SCHEDULE			
FIXTURE	SUPPLY		WASTE
	C.W.	H.W.	
LAV.	1/2"	1/2"	1-1/4"
W.C.	1"	—	4"
SHW.	1/2"	1/2"	3"
UR.	3/4"	—	2"
S. SK.	1/2"	1/2"	3"
SK.	1/2"	1/2"	1/2"
E.W.C.	1/2"	—	1-1/4"

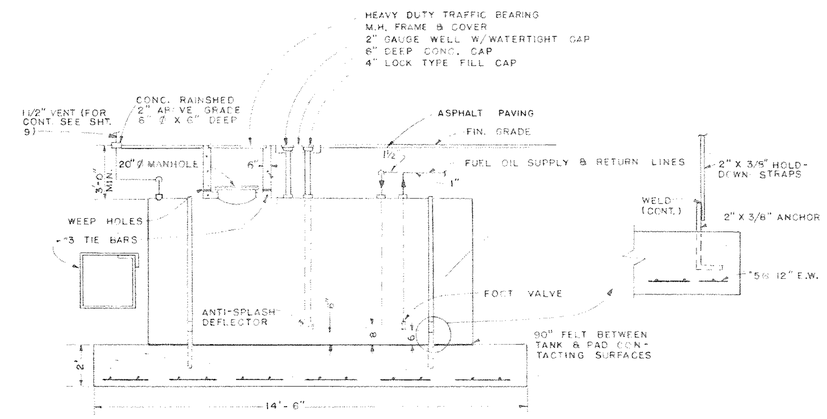

2,000 GAL. FUEL OIL STORAGE TANK

4,000 GALLON FUEL TANKS SIMILAR

NO SCALE

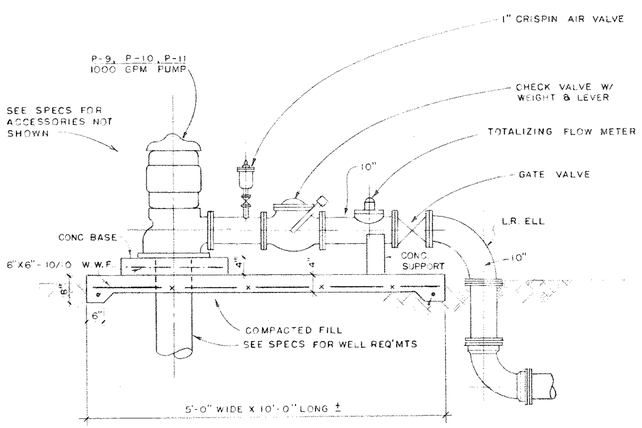

TYPICAL WELL & PIPING DETAIL

NO SCALE

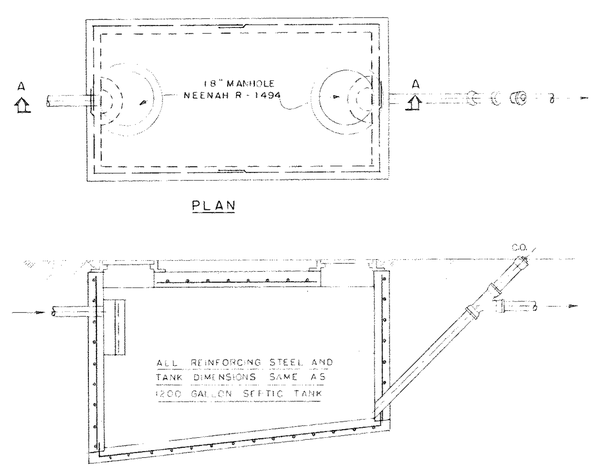

1200 GAL OIL & GREASE INTERCEPTOR

NO SCALE

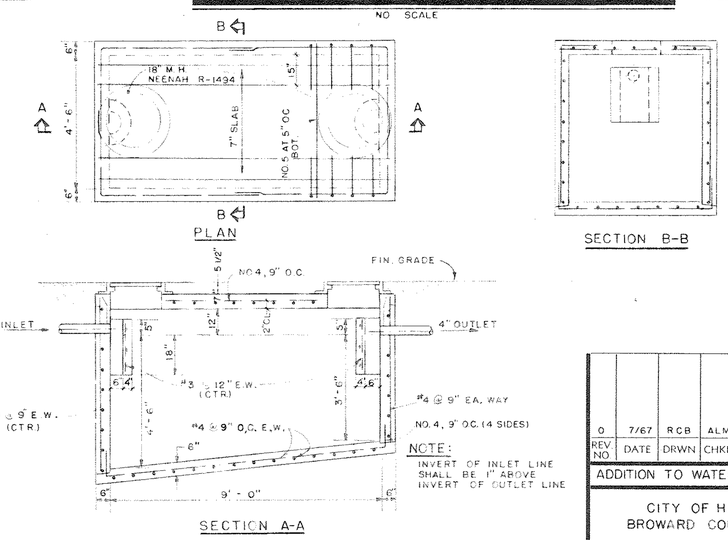

NOTE: INVERT OF INLET LINE SHALL BE 1" ABOVE INVERT OF OUTLET LINE

1200 GAL. SEPTIC TANK

NO SCALE

REV NO	DATE	DRWN	CHKD	REMARKS
0	7/67	RCB	ALM	

ADDITION TO WATER TREATMENT PLANT

CITY OF HALLANDALE
BROWARD COUNTY, FLORIDA

MISCELLANEOUS DETAILS

PHILPOTT, ROSS & SAARINEN, INC.
ENGINEERS
FORT LAUDERDALE, FLA.

DATE 7/67

REGISTERED ENGINEER NO. 4017

SHEET 17 RO

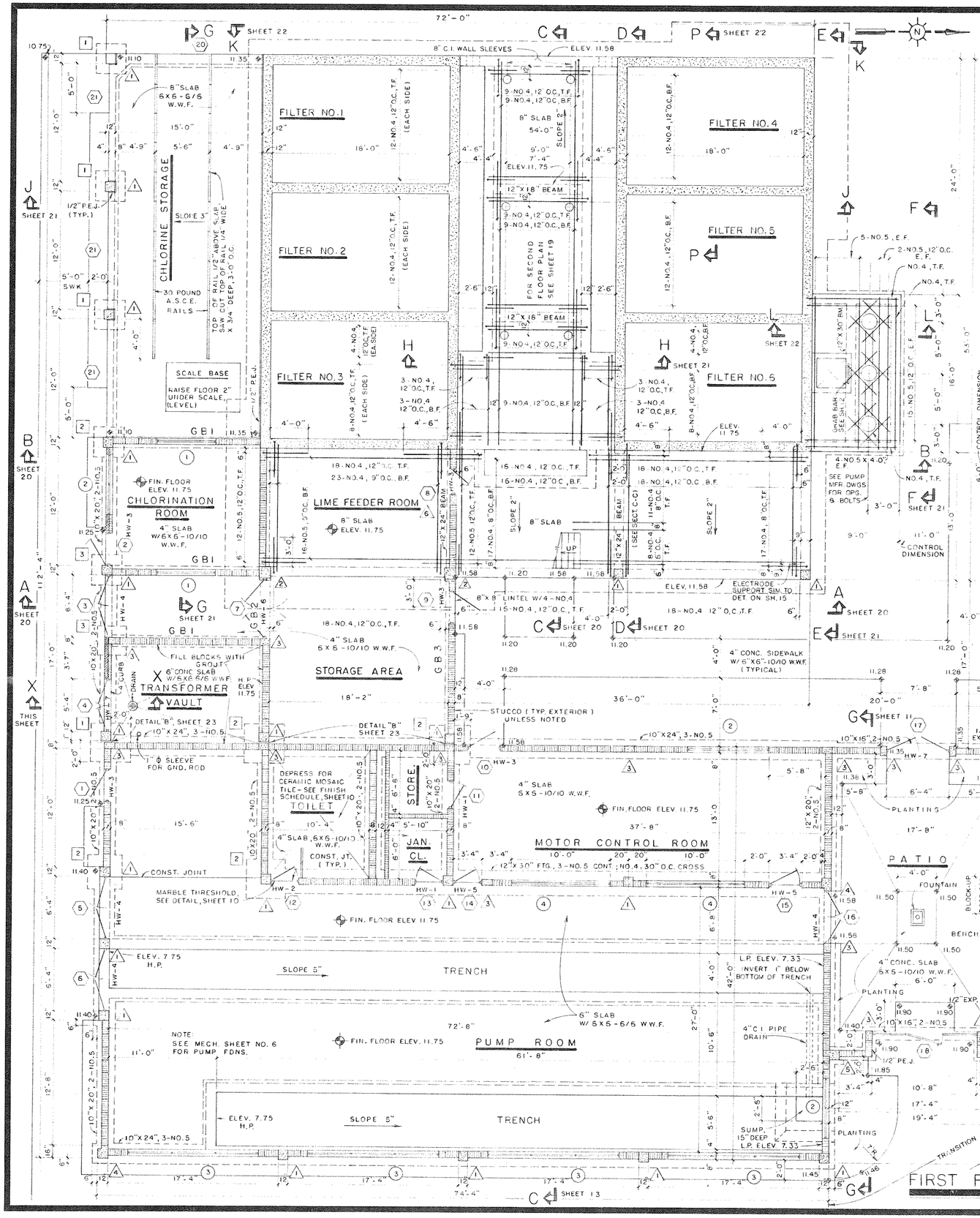

FIRST FLOOR & FOUNDATION PLAN

SCALE 3/16" = 1'-0"

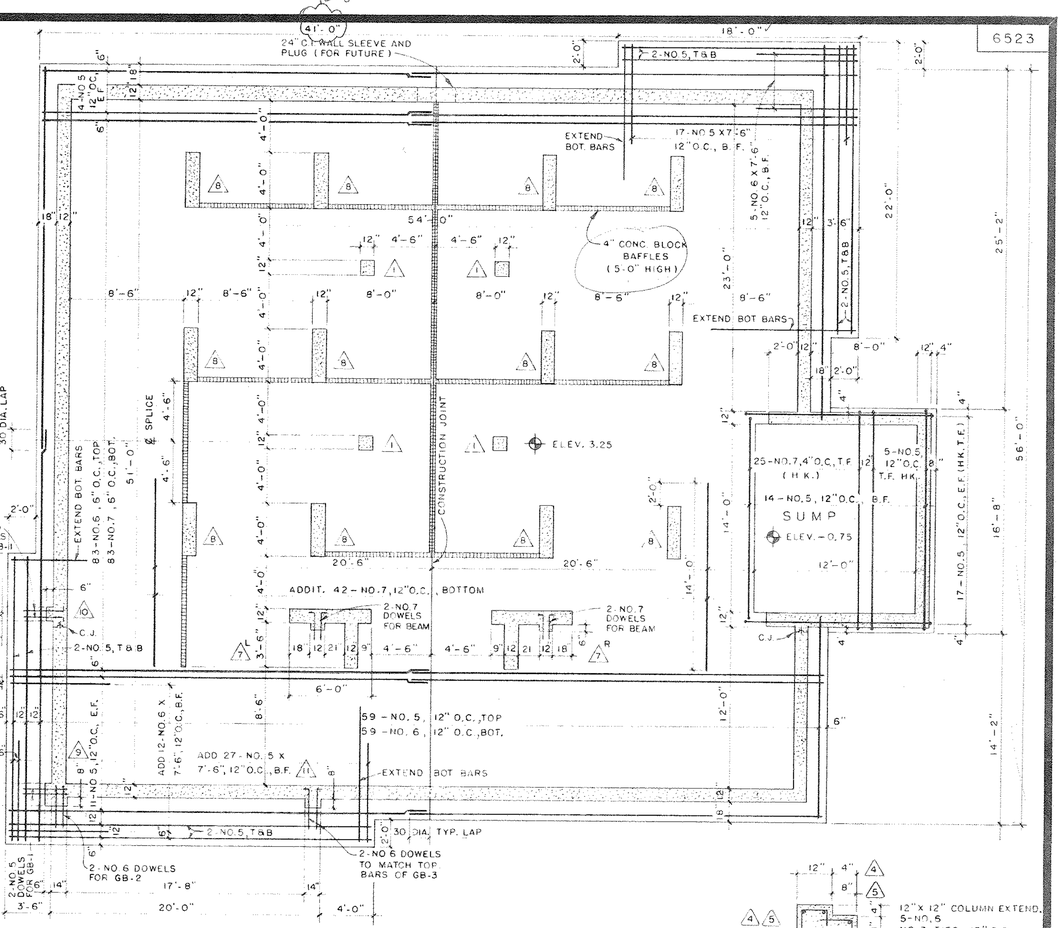

CLEARWELL BOTTOM SLAB

SCALE 3/16" = 1'-0"

GRADE BEAM SCHEDULE

MK. NO.	SIZE	TOP EL.	TOP BARS	BOT. BARS	NO. 3 STIRRUPS
GB1	12" X 18"	11.08	2 - NO. 5 HK	3 - NO. 7	12" O.C.
GB2	12" X 25"	11.08	2 - NO. 5 HK	4 - NO. 9	12" O.C.
GB3	12" X 20"	11.08	2 - NO. 5 HK	3 NO. 8	18" O.C.

FOUNDATION SCHEDULE

MK. NO.	SIZE	REINF.
1	4'-0" X 4'-0" X 12"	6 - NO. 4, E.W., BOT.
2	4'-6" X 4'-6" X 12"	8 - NO. 4, E.W., BOT.
3	3'-0" X 3'-0" X 12"	4 - NO. 4, E.W., BOT.

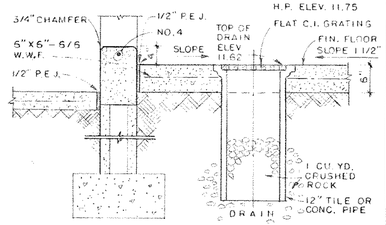

SECTION X - X

3/4" = 1'-0"

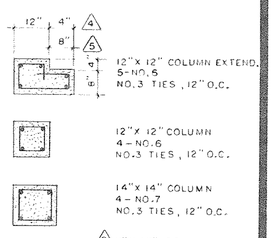

COLUMN DETAILS

NO SCALE

NOTES:

8" CONC. BLOCK WALLS LOAD BEARING & ERECTED BEFORE COLUMNS & TIE BEAMS.

(3) DESIGNATES DOOR, SEE SHEET 5 FOR SCHEDULE.

(3) " WINDOW, SEE SHEET 5 FOR SCHEDULE.

HW- DESIGNATES HARDWARE ITEM INDICATED IN SPECIFICATIONS.

MAX. DESIGN SOIL PRESSURE 2500 P.S.F.

WORK WITH MECH PLAN, SHEET 6

REV. NO.	DATE	DRWN	CHKD	REMARKS
0	6/67	J.H.H.	O.L.	

ADDITION TO WATER TREATMENT PLANT

CITY OF HALLANDALE
BROWARD COUNTY, FLORIDA

FLOOR AND FOUNDATION PLAN

PHILPOTT, ROSS & SAARINEN, INC.
ENGINEERS
FORT LAUDERDALE, FLA.

DATE 7/67 — REGISTERED ENGINEER NO. 4017 — SHEET 18 RO

6523

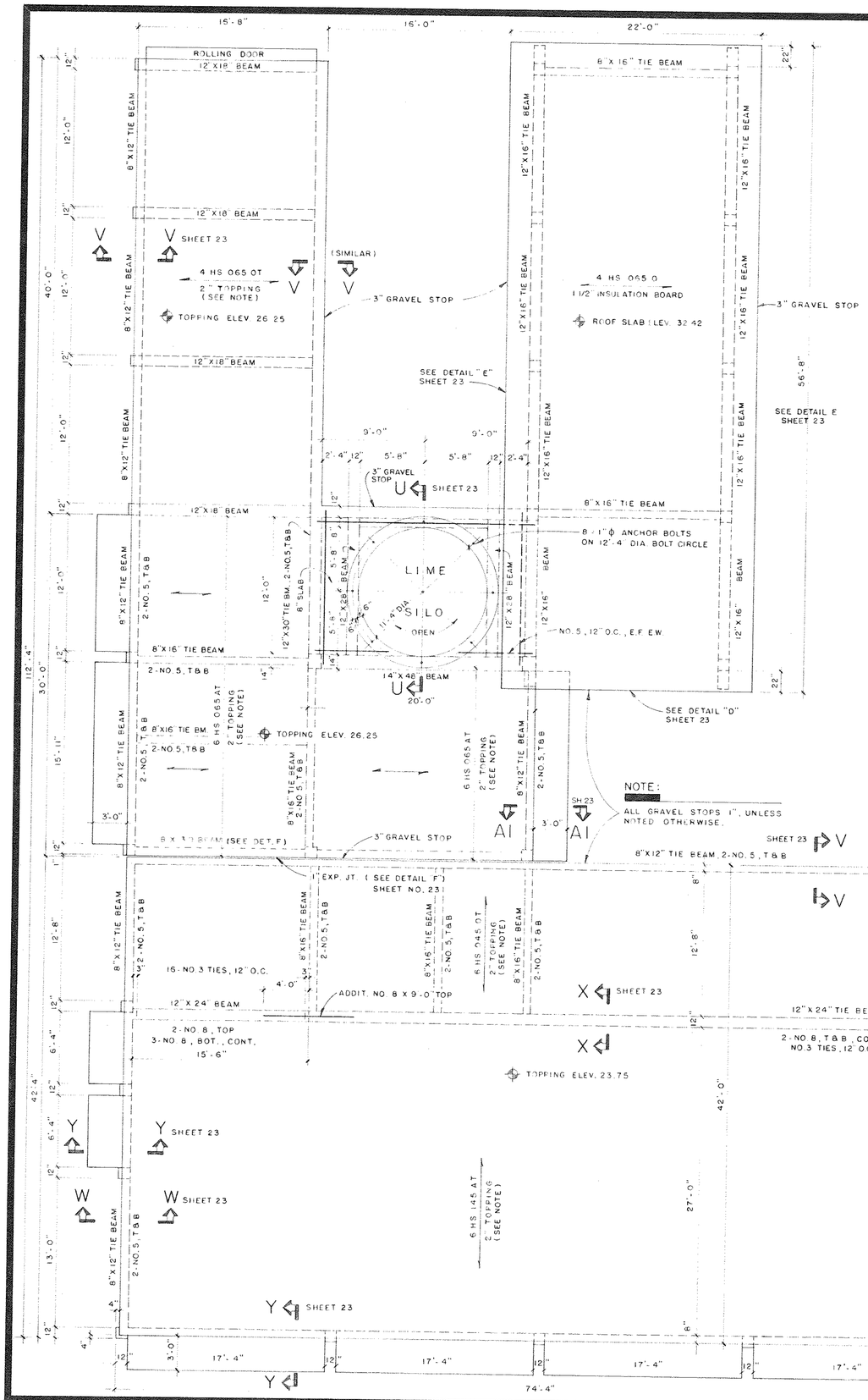

NOTE:

2" CONCRETE TOPPING ON ROOF SLABS 3000 P.S.I. AT 28 DAYS, WITH 6"X6"-10/10 W.W.F. TO FORM COMPOSITE ROOF. USE HOUDAILLE RECOMMENDATIONS.

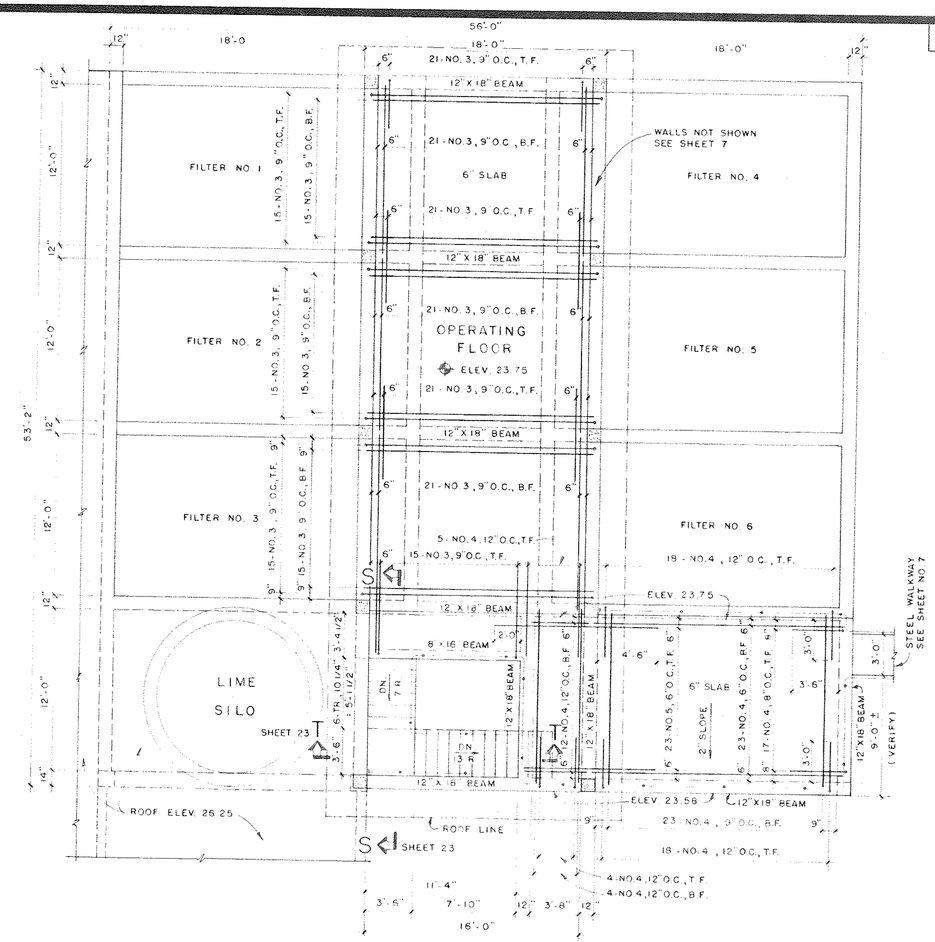

SECOND FLOOR PLAN

3/16" = 1'-0"

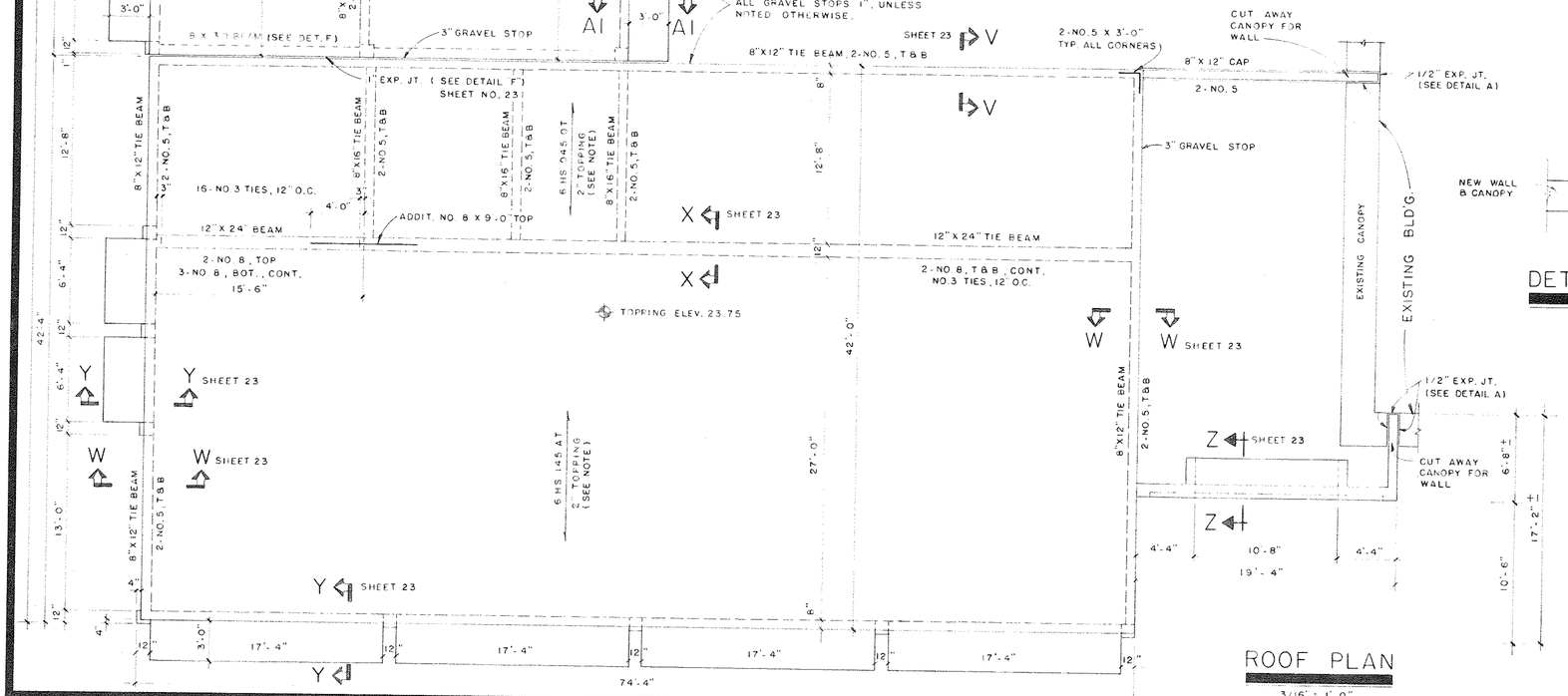

ROOF PLAN

3/16" = 1'-0"

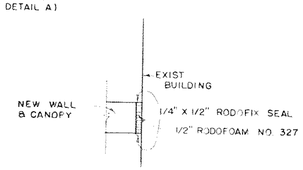

DETAIL "A"

NTS

REV. NO.	DATE	DRWN	CHKD	REMARKS
0	5/67	JHH	OL	

ADDITION TO WATER TREATMENT PLANT

CITY OF HALLANDALE
BROWARD COUNTY, FLORIDA

SECOND FLOOR & ROOF PLAN

PHILPOTT, ROSS & SAARINEN, INC.
ENGINEERS
FORT LAUDERDALE, FLA.

DATE 7/67

REGISTERED ENGINEER NO. 4017

SHEET 19 RO

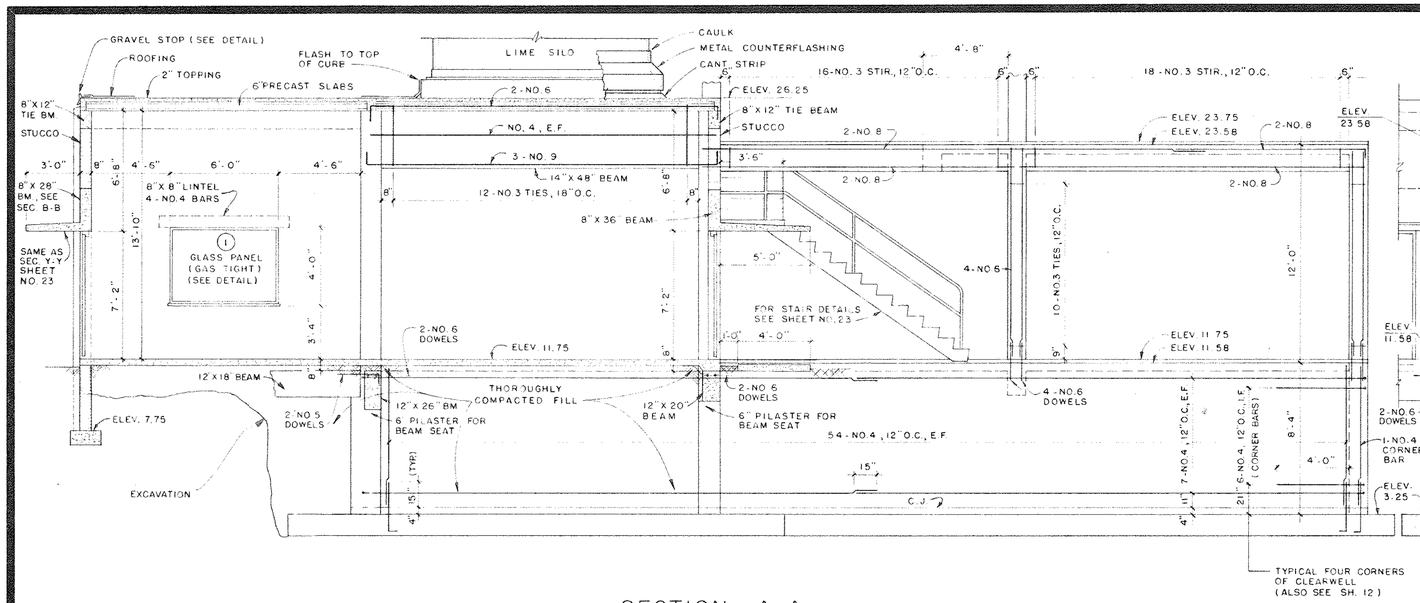

SECTION A-A

1/4" = 1'-0"

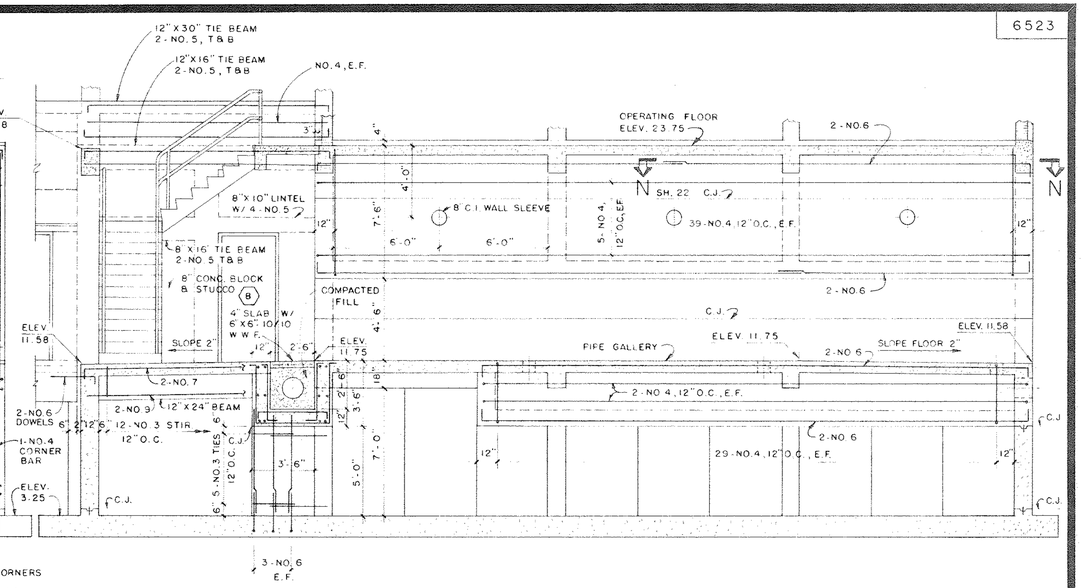

SECTION C-C

1/4" = 1'-0"

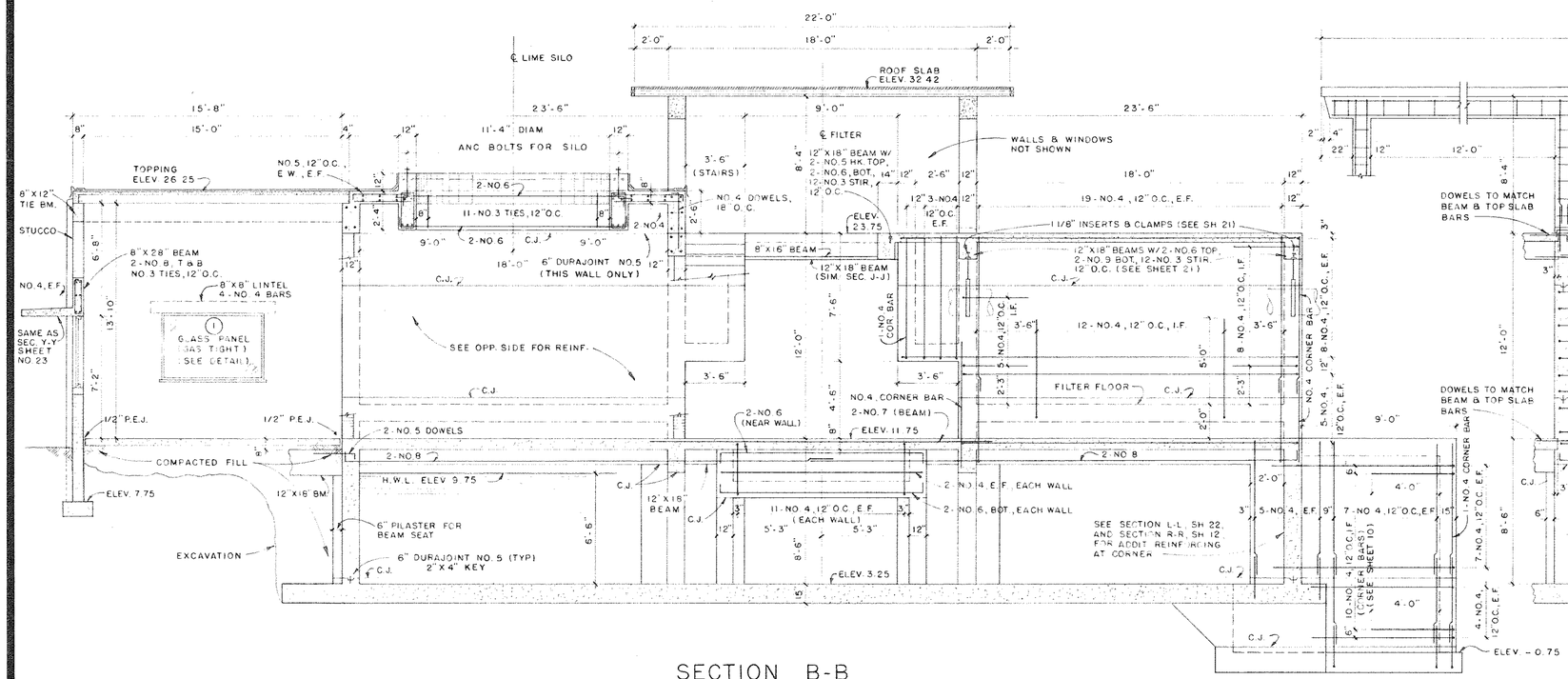

SECTION B-B

1/4" = 1'-0"

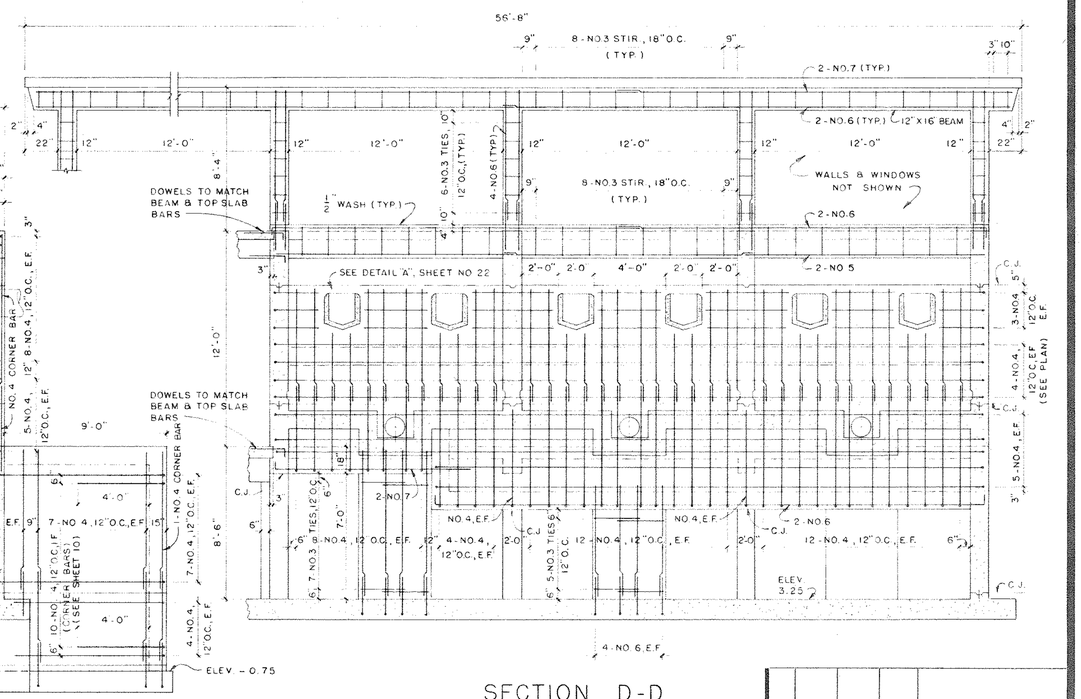

SECTION D-D

1/4" = 1'-0"

REV NO.	DATE	DRWN	CHKD	REMARKS
0	5/67	JHH	OL	

ADDITION TO WATER TREATMENT PLANT

CITY OF HALLANDALE
BROWARD COUNTY, FLORIDA

FILTER SECTIONS I

PHILPOTT, ROSS & SAARINEN, INC.
ENGINEERS
FORT LAUDERDALE, FLA.

DATE 7/67

REGISTERED ENGINEER NO. 4017

SHEET 20 RO

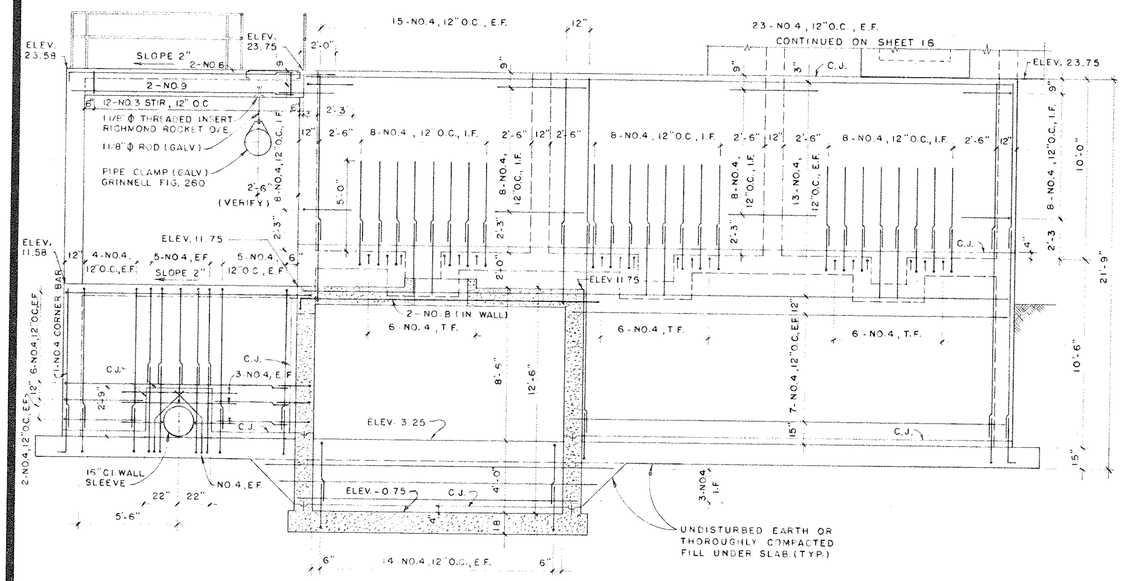

SECTION E-E

1/4" = 1'-0"

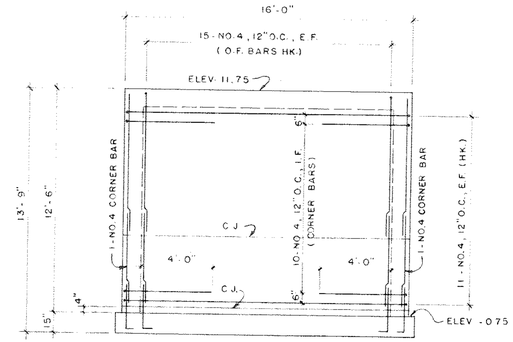

ELEVATION F-F

1/4" = 1'-0"

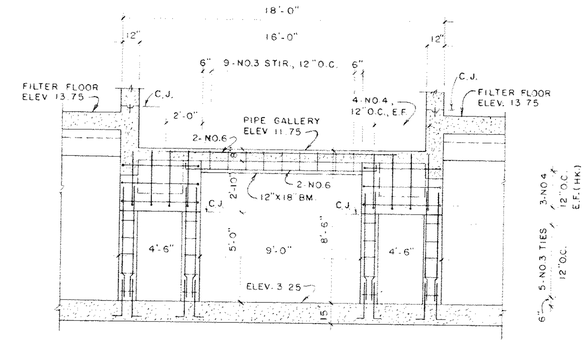

SECTION H-H

1/4" = 1'-0"

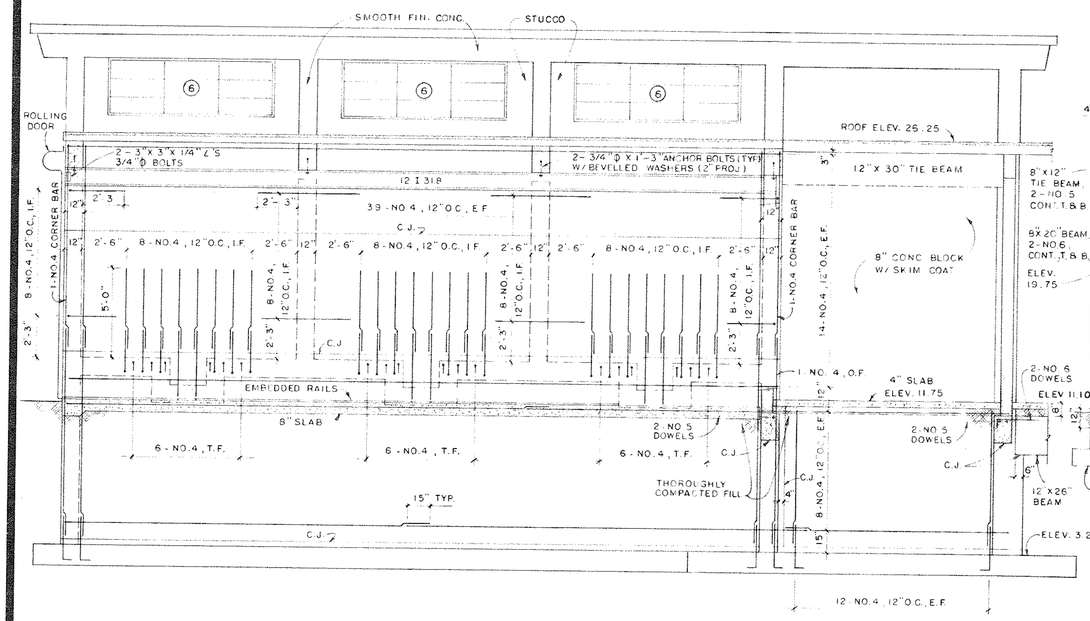

SECTION G-G

1/4" = 1'-0"

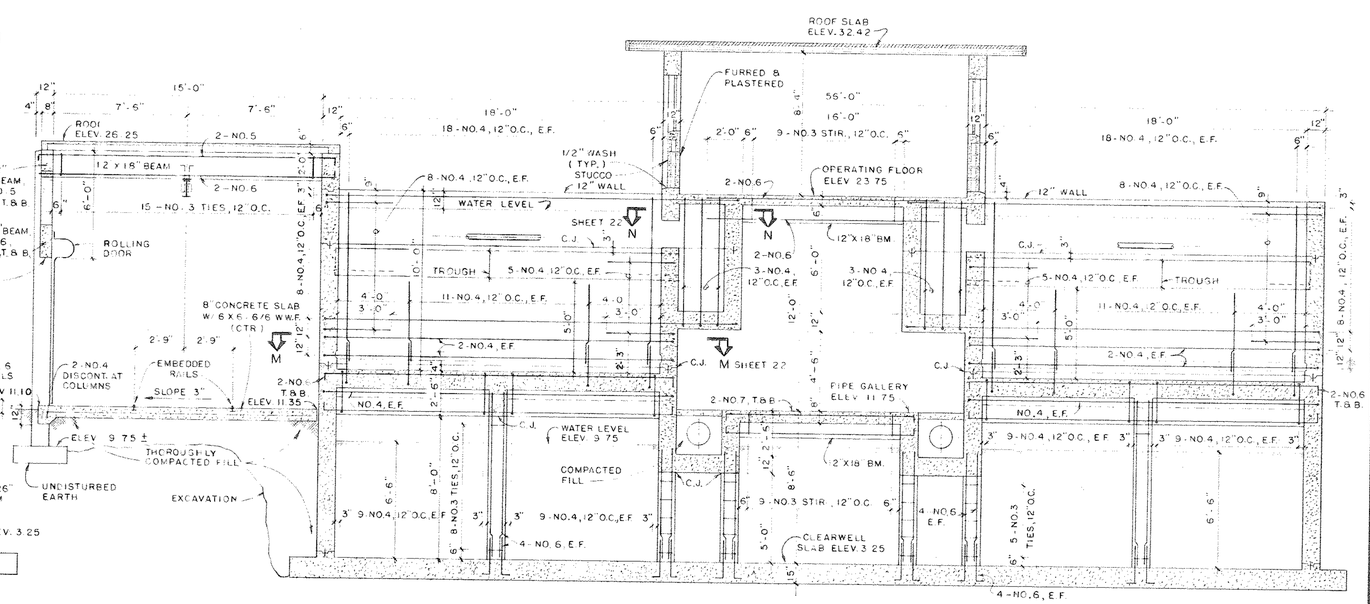

SECTION J-J

1/4" = 1'-0"

REV. NO.	DATE	DRWN	CHKD	REMARKS
0	6/67	J H H	O L	

ADDITION TO WATER TREATMENT PLANT

CITY OF HALLANDALE
BROWARD COUNTY, FLORIDA

FILTER SECTIONS II

PHILPOTT, ROSS & SAARINEN, INC.
ENGINEERS
FORT LAUDERDALE, FLA.

DATE 7/67

REGISTERED ENGINEER NO. 4017

SHEET 21 RO

6523

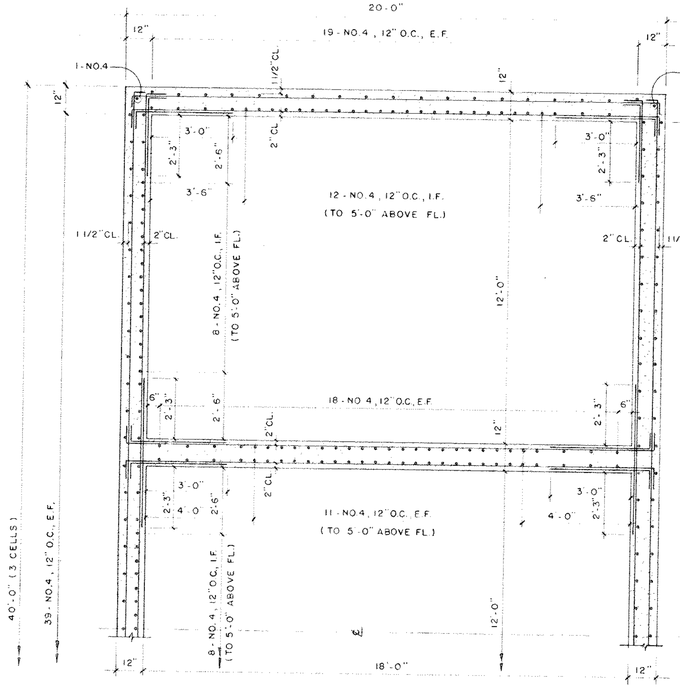

SECTION M-M
(SOUTHWEST QUARTER)

3/8" = 1'-0"

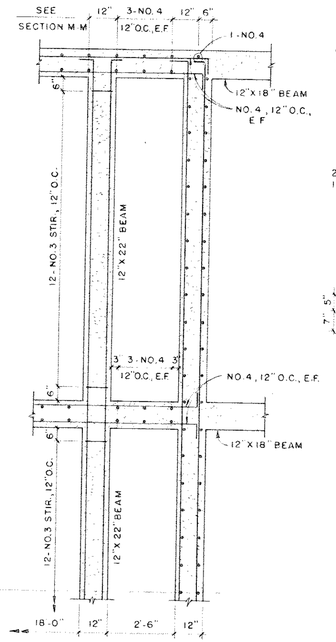

SECTION N-N

3/8" = 1'-0"

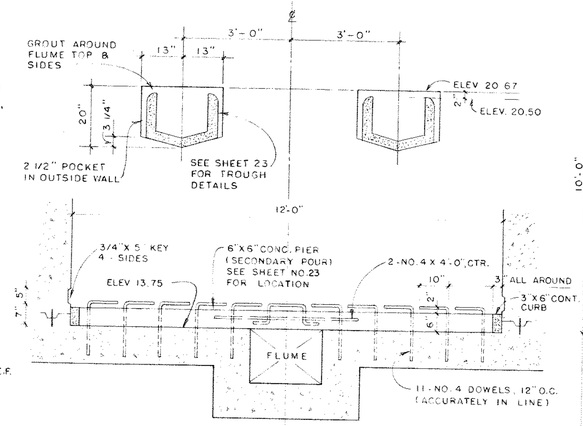

GRILLAGE DETAIL FOR WHEELER FILTER BOTTOM

1/2" = 1'-0"

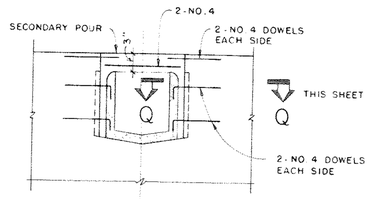

DETAIL "A"

1/2" = 1'-0"

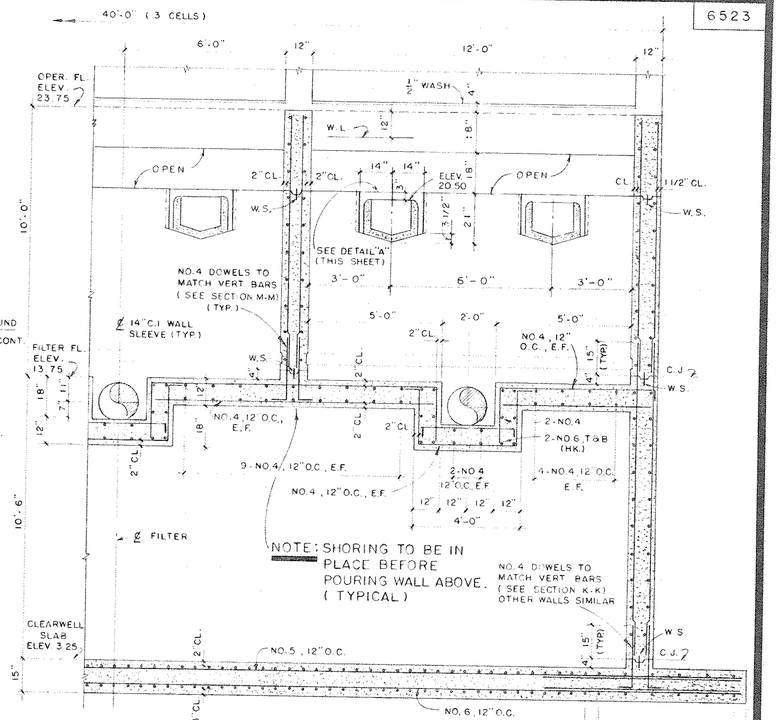

SECTION P-P

3/8" = 1'-0"

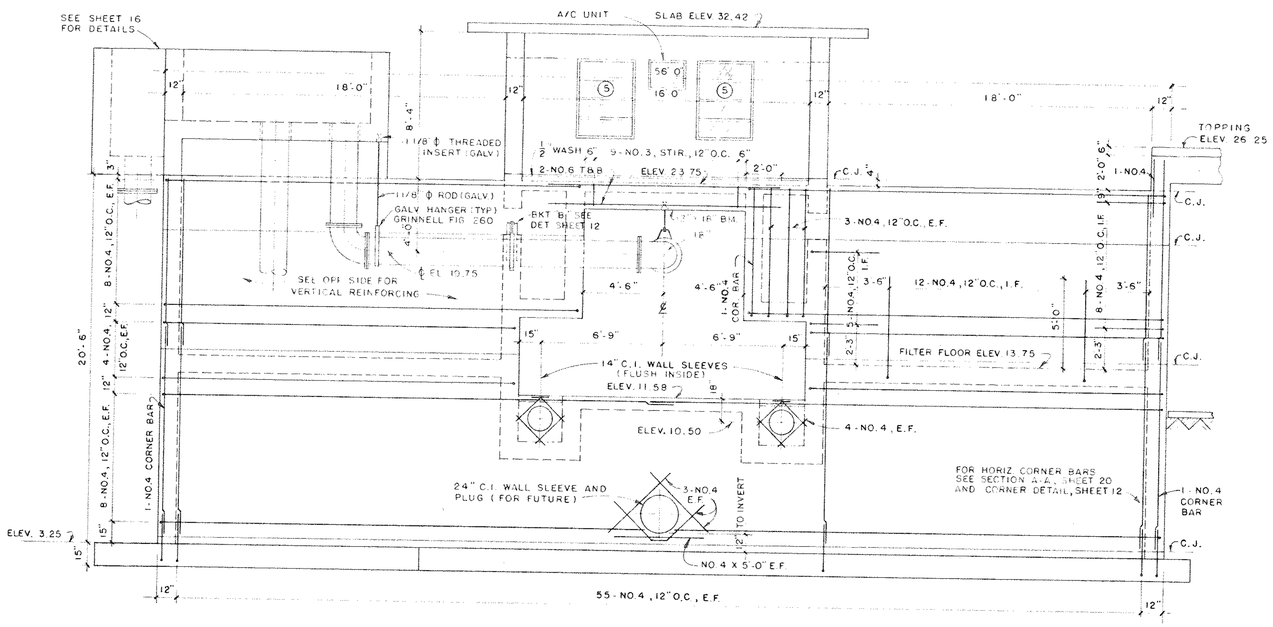

SECTION K-K

1/4" = 1'-0"

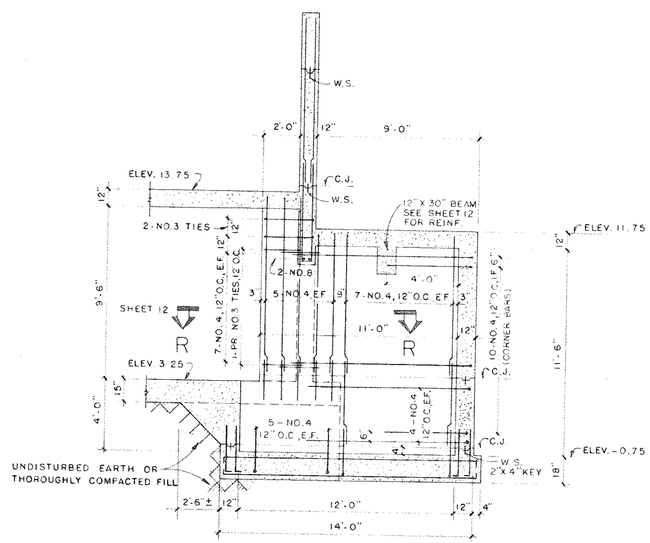

SECTION L-L

1/4" = 1'-0"

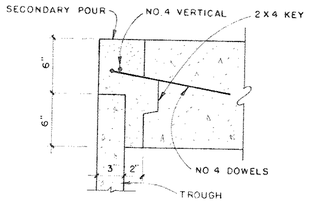

SECTION Q-Q

1 1/2" = 1'-0"

REV. NO	DATE	DRWN	CHKD	REMARKS
0	5/67	J.H.H.	O.L.	

ADDITION TO WATER TREATMENT PLANT

CITY OF HALLANDALE
BROWARD COUNTY, FLORIDA

FILTER SECTIONS III

PHILPOTT, ROSS & SAARINEN, INC.
ENGINEERS
FORT LAUDERDALE, FLA.

DATE 7/67 — REGISTERED ENGINEER NO. 4017 — SHEET 22 RO

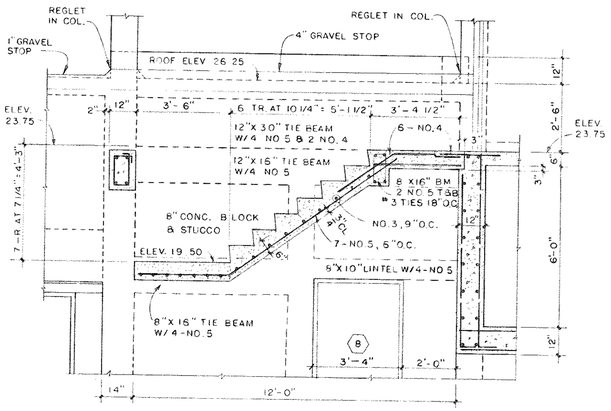

SECTION S-S (SHEET 19)

3/8" = 1'-0"

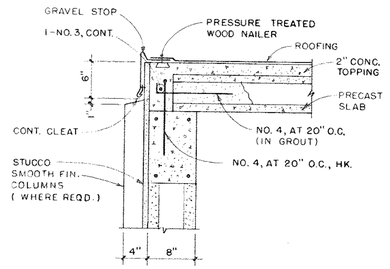

SECTION V-V

1" = 1'-0"

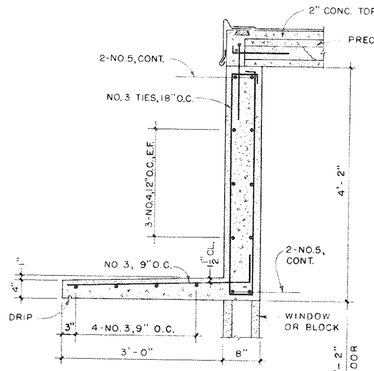

SECTION Y-Y

3/4" = 1'-0"

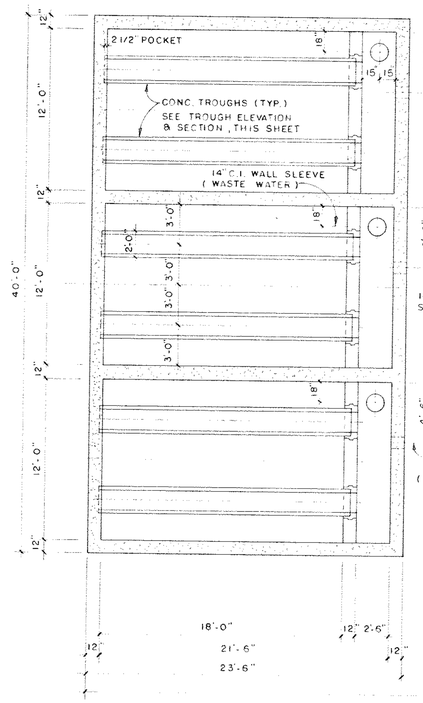

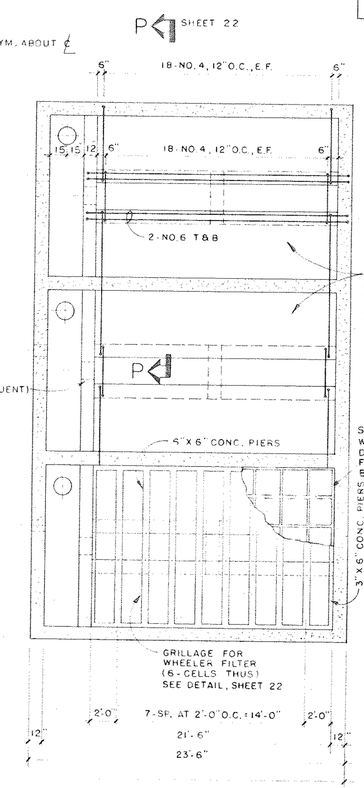

FILTER PLAN

3/16" = 1'-0"

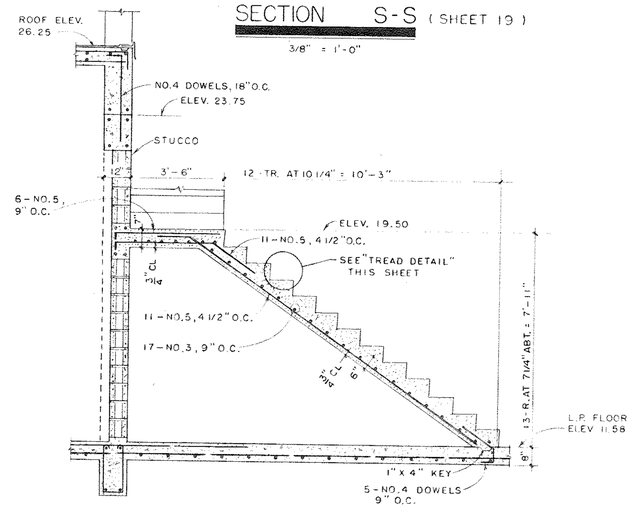

SECTION T-T (SHEET 19)

3/8" = 1'-0"

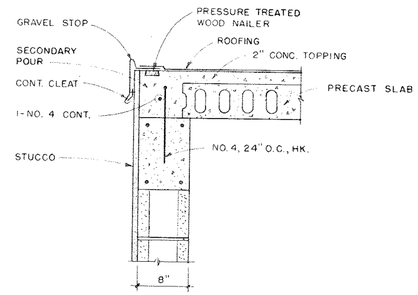

SECTION W-W

1" = 1'-0"

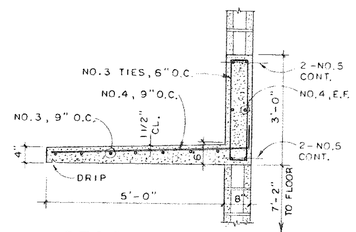

SECTION A1-A1

1/2" = 1'-0"

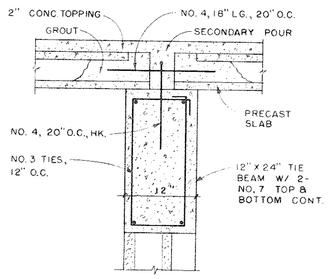

SECTION X-X

1" = 1'-0"

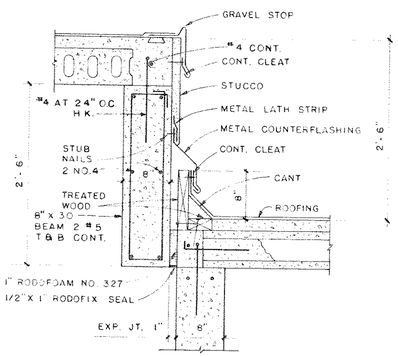

DETAIL "F"

1" = 1'-0"

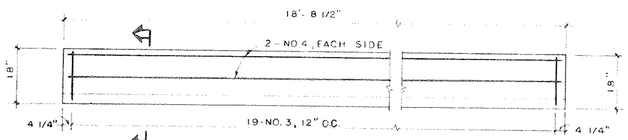

TROUGH ELEVATION

1/2" = 1'-0"

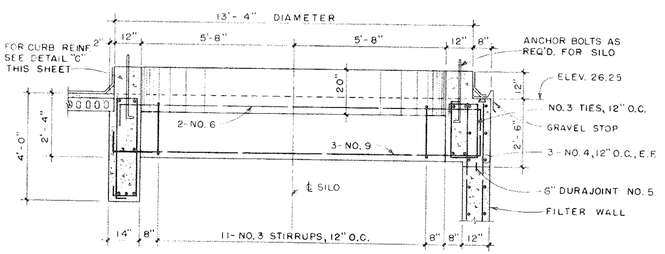

SECTION U-U (SHEET 19)

3/8" = 1'-0"

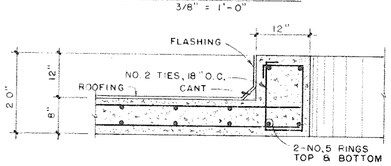

DETAIL "C"

3/4" = 1'-0"

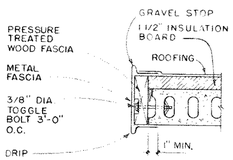

DETAIL "D"

1" = 1'-0"

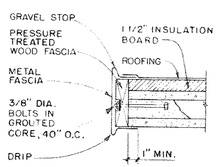

DETAIL "E"

1" = 1'-0"

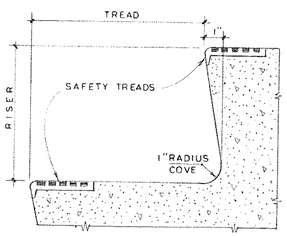

TREAD DETAIL

NO SCALE

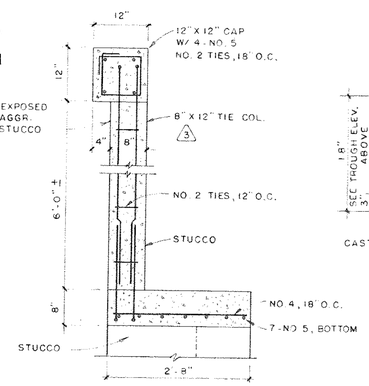

SECTION Z-Z

3/4" = 1'-0"

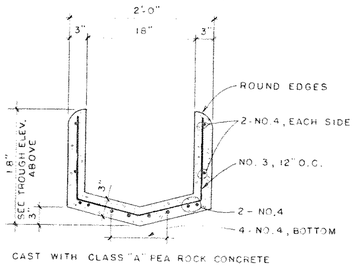

TROUGH SECTION

1" = 1'-0"

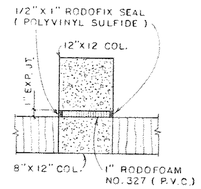

DETAIL "B"

3/4" = 1'-0"

REV. NO.	DATE	DRWN	CHKD	REMARKS
0	5/67	C.J.S.	C.L.	

ADDITION TO WATER TREATMENT PLANT

CITY OF HALLANDALE
BROWARD COUNTY, FLORIDA

SECTIONS AND DETAILS

PHILPOTT, ROSS & SAARINEN, INC.
ENGINEERS
FORT LAUDERDALE, FLA.

DATE 7/67

REGISTERED ENGINEER NO. 4017

SHEET 23 RO

NOTE

LADDER, CAGE, MANHOLE AND FILL LINE NOT SHOWN IN TRUE LOCATION SEE PLAN FOR ORIENTATION.

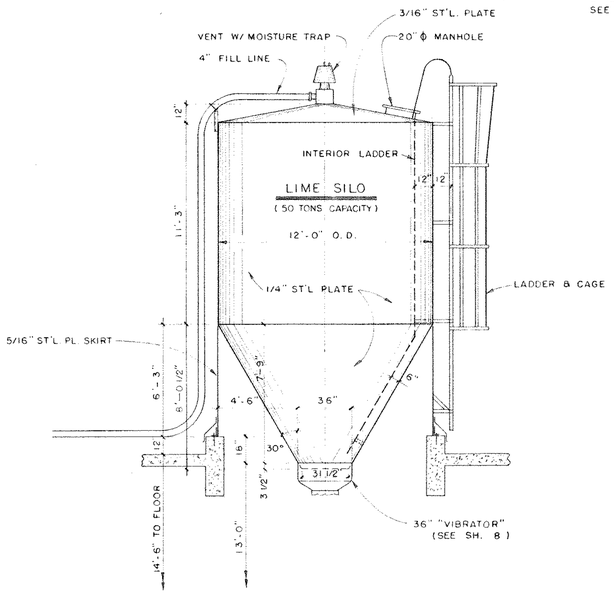

ELEVATION

1/4" = 1'-0"

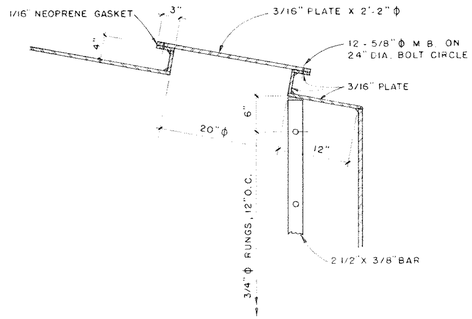

MANHOLE DETAIL

1" = 1'-0"

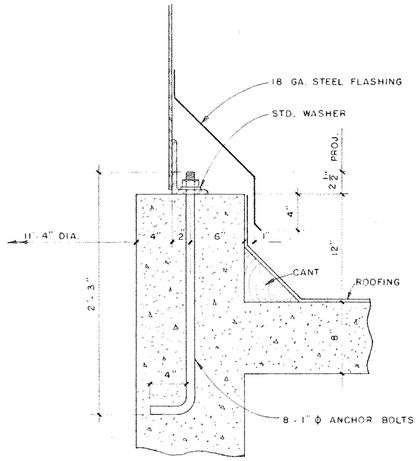

SILO ANCHOR BOLT DETAIL

1 1/2" = 1'-0"

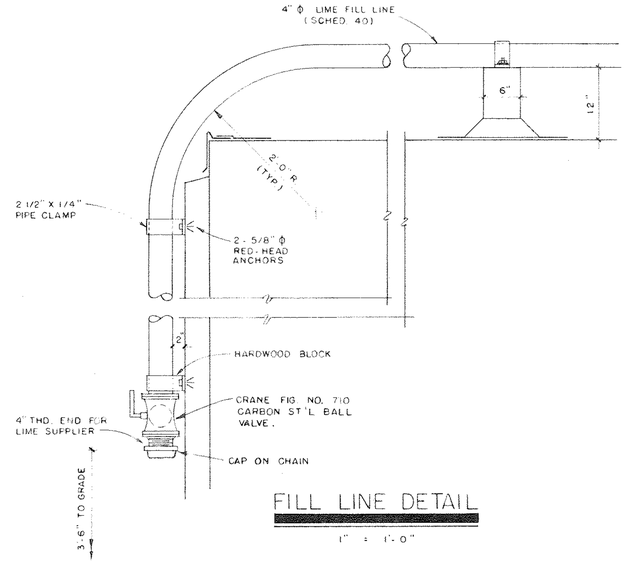

FILL LINE DETAIL

1" = 1'-0"

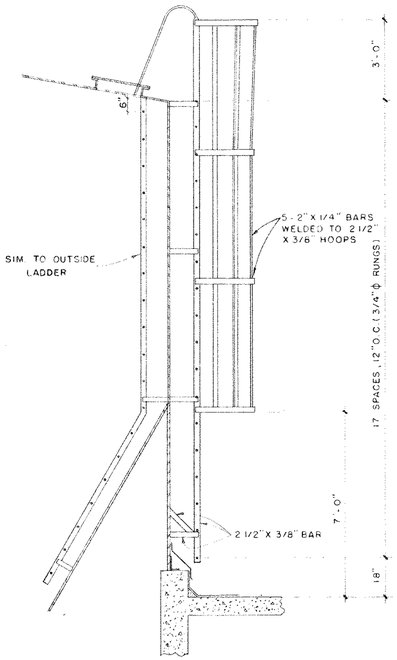

LADDER DETAIL

3/8" = 1'-0"

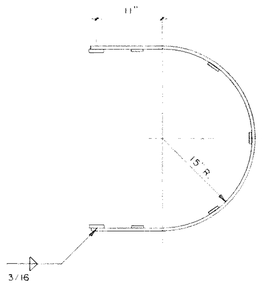

TOP HOOP DETAIL

1" = 1'-0"

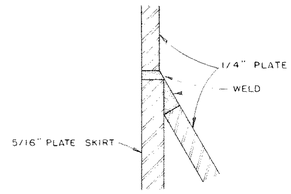

SKIRT TO TANK WELDING DETAIL

FULL SCALE

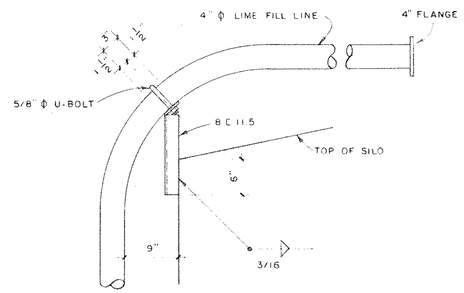

TOP PIPE SUPPORT

1" = 1'-0"

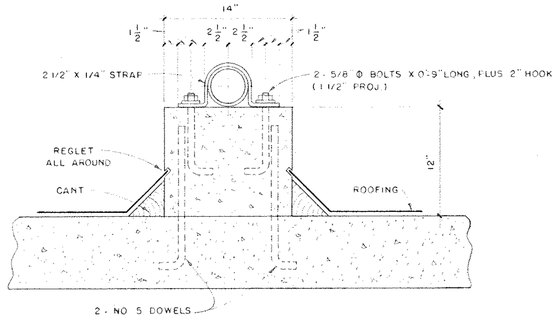

ROOF PIPE SUPPORT

1 1/2" = 1'-0"

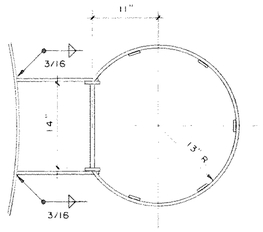

TYPICAL HOOP DETAIL

1" = 1'-0"

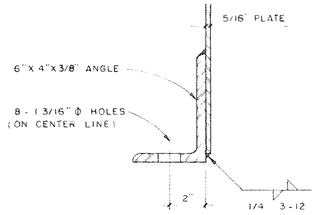

BASE ANGLE DETAIL

3" = 1'-0"

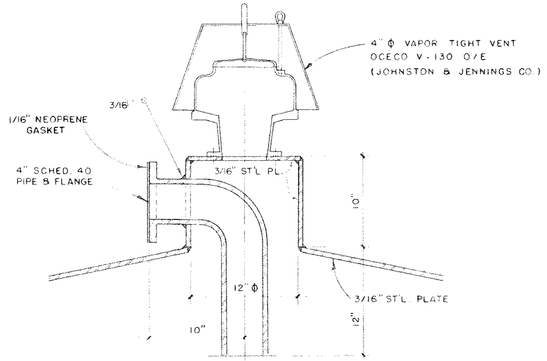

VENT AND FILLER DETAIL

1 1/2" = 1'-0"

REV NO	DATE	DRWN	CHKD	REMARKS
0	7/67	JHH	OL	

ADDITION TO WATER TREATMENT PLANT

CITY OF HALLANDALE
BROWARD COUNTY, FLORIDA

LIME SILO DETAILS

PHILPOTT, ROSS & SAARINEN, INC.
ENGINEERS
FORT LAUDERDALE, FLA.

DATE 7/67

REGISTERED ENGINEER NO. 4017

SHEET 24 RO

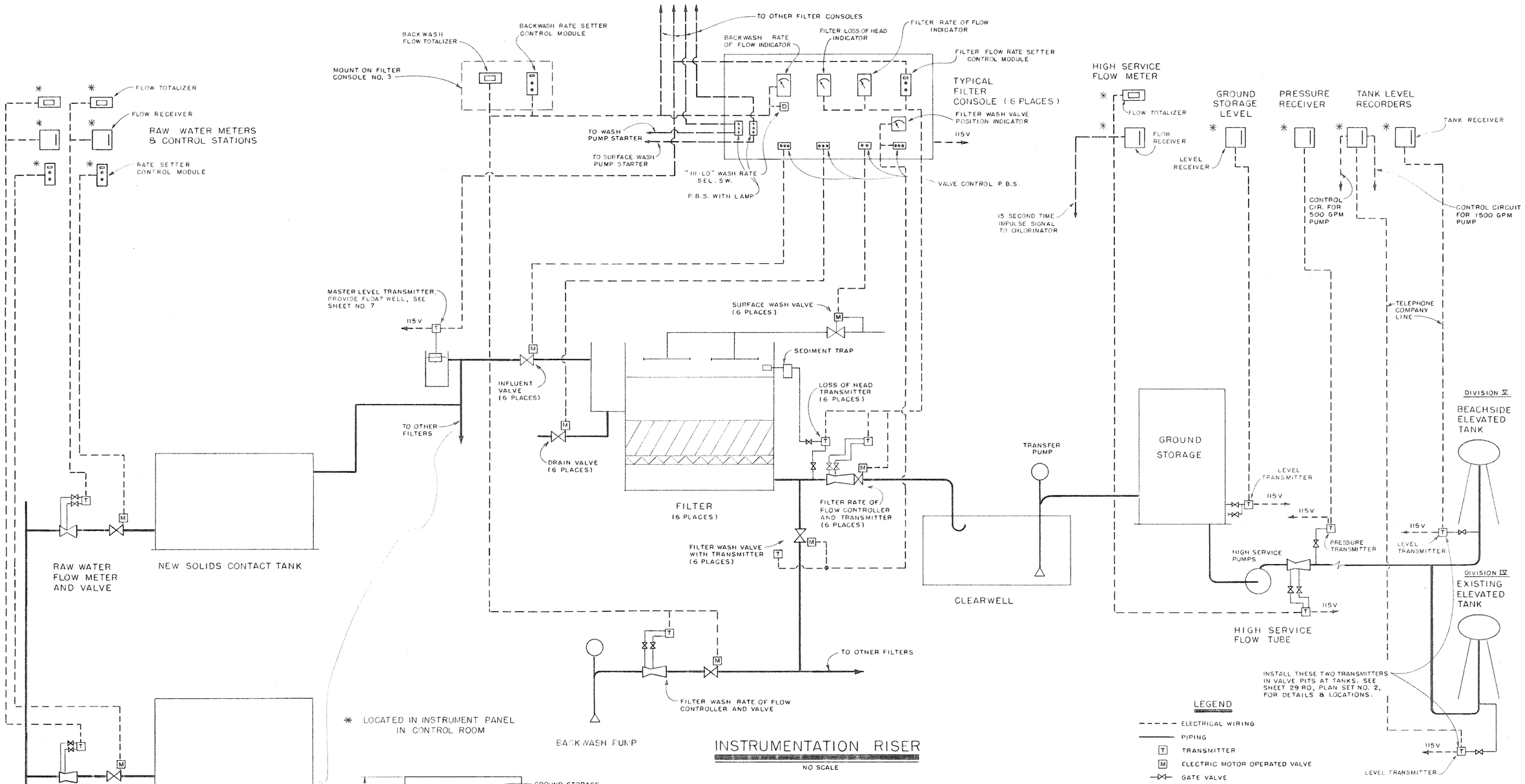

INSTRUMENTATION RISER

NO SCALE

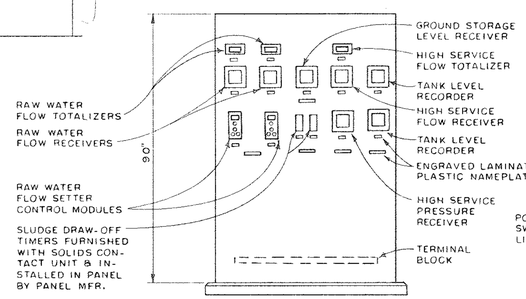

FRONT VIEW

INSTRUMENT PANEL

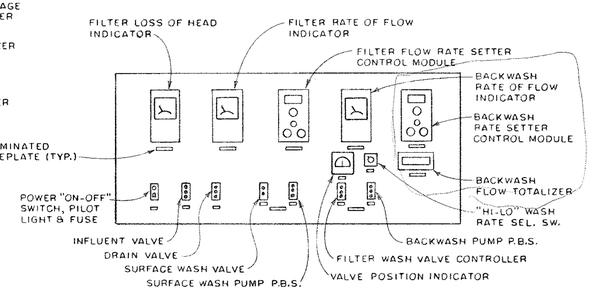

TOP VIEW

FILTER CONSOLE NO. 3

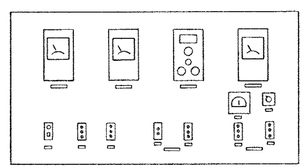

TOP VIEW

FILTER CONSOLE NO'S 1, 2, 4, 5 & 6

REV. NO	DATE	DRWN	CHKD	REMARKS
0	7/67	JCH	CEB	

ADDITION TO WATER TREATMENT PLANT

CITY OF HALLANDALE
BROWARD COUNTY, FLORIDA

INSTRUMENTATION DIAGRAMS

PHILPOTT, ROSS & SAARINEN, INC.
ENGINEERS
FORT LAUDERDALE, FLA.

DATE 7/67 | REGISTERED ENGINEER NO. 4017 | SHEET 25 RO

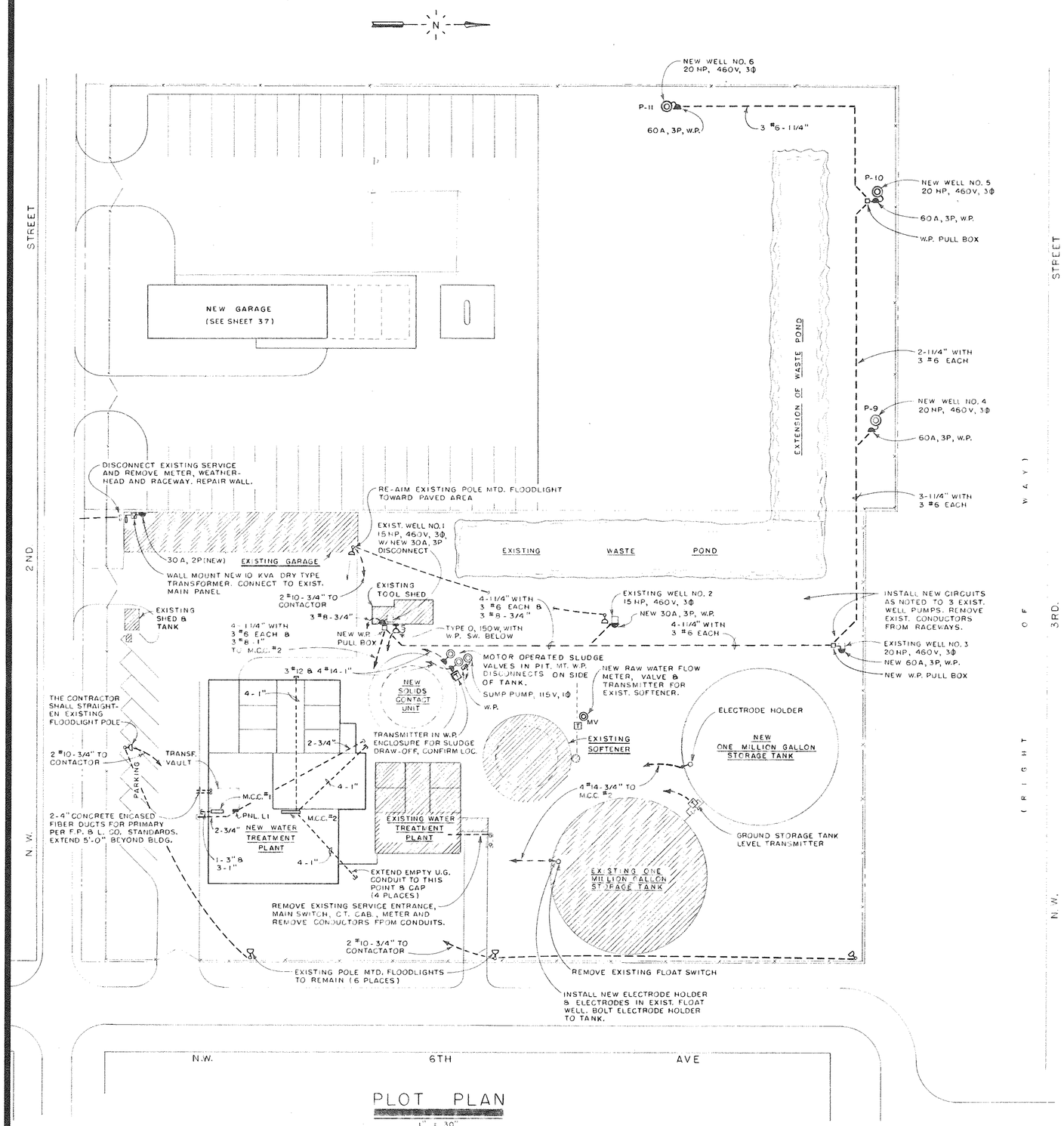

PLOT PLAN

1" = 30'

LIGHTING FIXTURE SCHEDULE

TYPE	WATTS	DESCRIPTION	MANUFACTURER
A	200W	FLUORESCENT TROFFER, 2' x 4', SUITABLE FOR EXPOSED T-BAR SUSPENSION, WITH CORNING PATTERN 70 PRISMATIC GLASS LENS & 4-40W LAMPS	DAYBRITE'S "MOBILEX", OR WAKEFIELD'S TYPE "THR"
B	200W	FLUORESCENT FIXTURE, 2' x 4', SURFACE MTD., METAL SIDES, WITH CORNING PATTERN 70 PRISMATIC GLASS LENS & 4-40W R.S. LAMPS	DAYBRITE'S "DAYLUME"
C	100W	SIMILAR TO TYPE "B", EXCEPT 1'x4', WITH 2 - 40W R.S. LAMPS	DITTO
D	200W	INDUSTRIAL FLUORESCENT, 8' LONG, PORCELAIN ENAMEL REFLECTOR, 10° UP LIGHT, WITH 4-40W R.S. LAMPS, MTD. IN TANDUM	DAYBRITE'S "4021I SERIES" OR WAKEFIELD'S "SERIES WIR-218"
E	100W	FLUORESCENT FIXTURE, 4' LONG, VAPORTIGHT, GASKETED, WITH 2-40W R.S. LAMPS	WAKEFIELD'S "OMNI"
F	200W	CEILING MTD. INCANDESCENT FIXTURE, RLM DOME, SHOCK ABSORBING FITTING, W/1-200W LAMP	MILLER CAT. #AE-3022
G	150W	SIMILAR TO TYPE F, EXCEPT PENDANT MTD. 8'-0" ABOVE FLOOR, CONFIRM IN FIELD	MILLER CAT. #AE-3051
H	150W	CEILING MTD. INCANDESCENT, VAPOR-TIGHT, STANDARD DOME REFLECTOR, W/1-150W LAMP	MILLER CAT. #AC-1111
J	100W	TWO PIECE PORCELAIN SOCKET WITH BARE LAMP	———
K	150W	WALL MTD. INCANDESCENT, ALUMINUM HOUSING, GLASS LENS, WITH 2-75W LAMPS	ART METAL CAT. #3549AA
L	100W	WALL MTD. INCANDESCENT, W.P., BUG-TIGHT, CAST ALUMINUM, WITH JUNCTION BOX, EXTENSION RINGS & 1-100W LAMPS	MOLDCAST CAT. #MLS-1100 W/VB-4 BOX & EXTENSION RINGS
M	120W	WALL MTD. INCANDESCENT, W.P., BUG-TIGHT, CAST ALUMINUM, WITH ASYMMETRIC PRISMATIC REFRACTOR, WITH 2-60W LAMPS	MCPHILBEN # 9-37 WITH FLUSH MTD. CAST BOX
N	120W	SIMILAR TO TYPE M, EXCEPT HOODLESS WITH SATIN BLACK ANODIZED FINISH & MOLDED WHITE GLASS DIFFUSER. MOUNT VERTICALLY.	MCPHILBEN #9-20VTB W/ FLUSH MTD. CAST BOX
O	150W	WALL MTD. CAST ALUMINUM BULLET, W.P., WITH 1, 150W PAR 38 FLOOD LAMP	MOLDCAST CAT. #341 "SLASH BULLET"
P	200W	POST MTD. INCANDESCENT, W.P., GASKETED, PRISMATIC GLASS LENS, ALUMINUM TOP, AND 1" PIPE SLIP FITTER & 1, 200W LAMP. SEE DETAIL BELOW	HOLOPHANE CAT. #04344
Q	400W	POLE MTD. FLOODLIGHT FIXTURE, W.P., GASKETED, CAST ALUMINUM, TEMPERED CLEAR GLASS COVER, WITH HIGH REACTANCE BALLAST AND 400W COLOR IMPROVED MERCURY VAPOR LAMP	GENERAL ELECTRIC CO. CAT. #P-400A
R	120W	CEILING MTD. INCANDESCENT FIXTURE, GLASS BOTTOM, ALUMINUM HOUSING W/ 2-60W LAMPS	ART METAL CAT. #3379 SL
S	100W	WALL MTD. CAST ALUMINUM BULLET, W.P. WITH 1-100W PAR 38 BLUE-WHITE LAMP	MOLDCAST CAT. #141

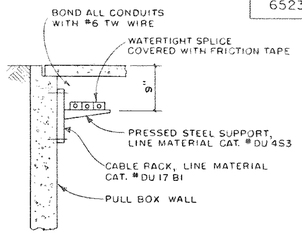

CABLE RACKING DETAIL

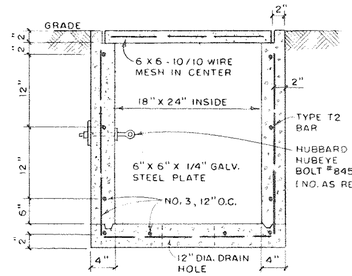

SECTIONAL ELEVATION

PULL BOX

NO SCALE

NOTES

1. DO NOT SCALE THE ELECTRICAL DRAWINGS. REFER TO THE MECHANICAL & STRUCTURAL DRAWINGS AND APPROVED MFGR'S SHOP DRAWINGS FOR EXACT LOCATION OF ALL EQUIPMENT.
2. ALL WORK SHALL BE DONE IN ACCORDANCE WITH THE NATIONAL ELECTRICAL CODE AND SHALL COMPLY WITH ALL LOCAL RULES AND ORDINANCES.
3. CONDUCTORS SHALL BE COPPER WITH TYPE TW INSULATION FOR SIZE 2 & SMALLER. CONDUCTORS LARGER THAN #2 SHALL HAVE TYPE THW INSULATION.
4. OBSOLETE EQUIPMENT SHALL BE DELIVERED TO THE CITY.
5. ALL OUTSIDE RACEWAYS SHALL HAVE 18" (MIN.) COVER.
6. MOTORS SHALL BE CONNECTED WITH FLEXIBLE CONDUIT, MINIMUM 18" AT EACH TERMINATION.
7. ALL SURFACE MOUNTED BOXES SHALL CAST METAL TYPE. EXTERIOR BOXES SHALL BE MFD. BY HOPE CO. OR APPROVED EQUAL.
8. UNLESS OTHERWISE NOTED, ALL FIXTURES SHALL BE SUPPLIED WITH 120 VOLT INSIDE FROSTED LAMPS.
9. ALL EXISTING ELECTRICAL EQUIPMENT REMOVED SHALL BE STORED AS DIRECTED BY THE CITY'S REPRESENTATIVE.

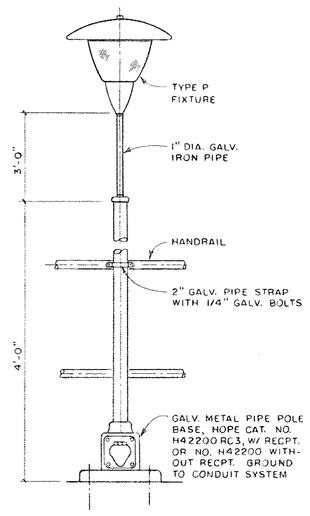

TYPE P FIXTURE DETAIL

NO SCALE

REV NO	DATE	DRWN	CHKD	REMARKS
0	7/67	JCH	CEB	

ADDITION TO WATER TREATMENT PLANT

CITY OF HALLANDALE
BROWARD COUNTY, FLORIDA

ELEC. PLOT PLAN, SCHEDULE & NOTES

PHILPOTT, ROSS & SAARINEN, INC.
ENGINEERS
FORT LAUDERDALE, FLA.

DATE 7/67

REGISTERED ENGINEER NO. 4017

SHEET 26 RO

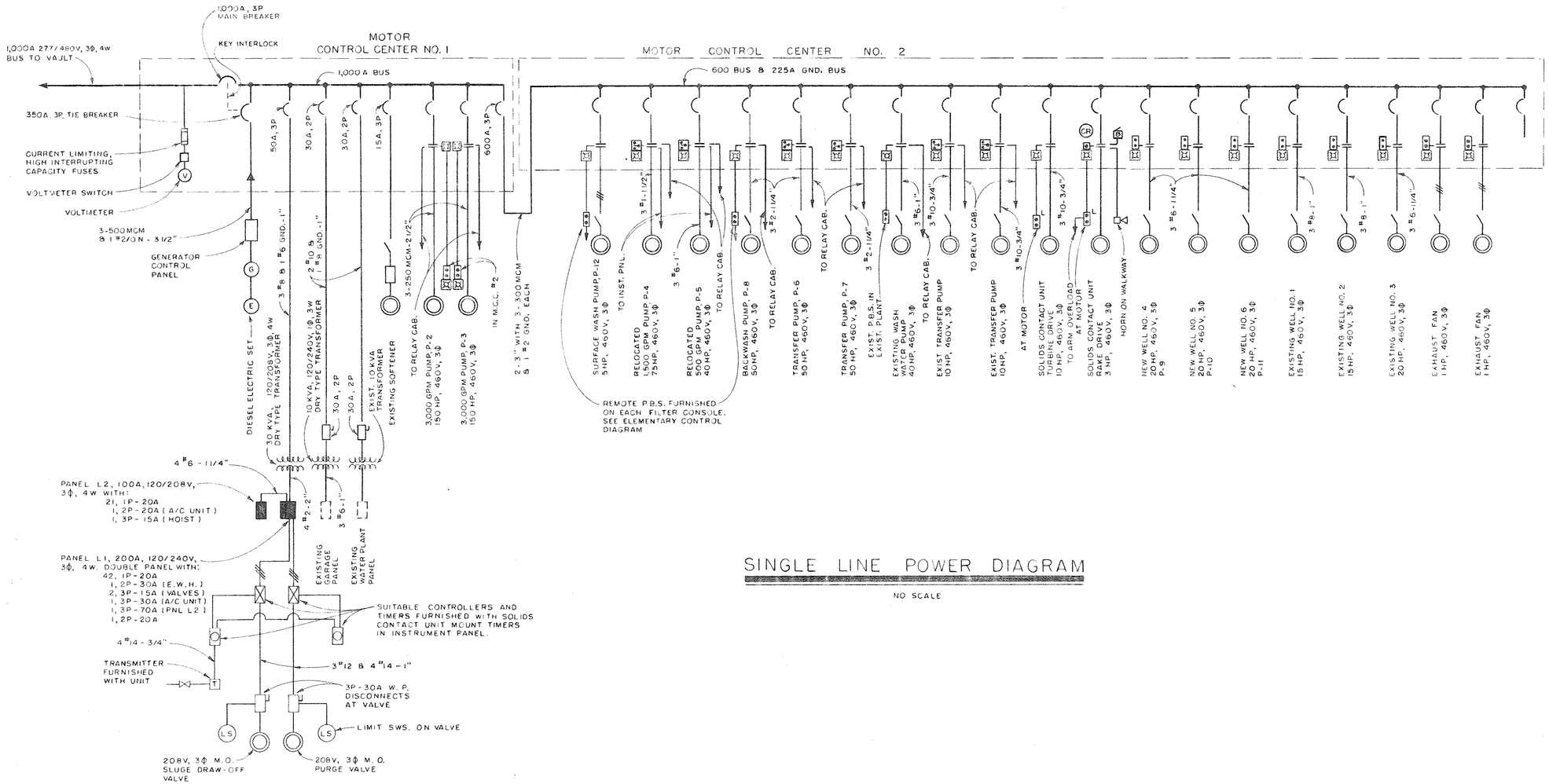

SINGLE LINE POWER DIAGRAM

NO SCALE

LEGEND

- INCANDESCENT LIGHTING FIXTURE - CEILING MTD.
- INCANDESCENT LIGHTING FIXTURE - WALL MTD.
- FLUORESCENT LIGHTING FIXTURE
- FLOODLIGHT FIXTURE
- COMBINATION RECPT., 15A, 120/208V, 1Φ, 3W
- POWER RECPT., 50A, 120/208V, 1Φ, 3W
- S — LOCAL TUMBLER SWITCH - FLUSH MTD.
- S — LOCAL TUMBLER SWITCH - SURFACE MTD.
- S3 — 3-WAY SWITCH
- DUPLEX WALL RECEPTACLE, FLUSH MTD., 120V, 15A, 3W
- DUPLEX WALL RECEPT. - SURFACE MTD.
- SINGLE RECEPTACLE, 208V, 1Φ, 3W, 20A
- SINGLE RECEPTACLE, 208V, 1Φ, 3W, 30A
- J — JUNCTION BOX
- M.C.C. — MOTOR CONTROL CENTER
- POWER PANEL
- LIGHTING PANEL
- DRY TYPE TRANSFORMER
- ELECTRIC OPERATED MOTOR - NUMERAL INDICATES HORSEPOWER
- MANUAL MOTOR STARTER
- MAGNETIC MOTOR STARTER
- NON-FUSIBLE DISCONNECT SWITCH
- "ON-OFF" CONTROL SW., MAINTAINED - "L" INDICATES LOCK-OUT FEATURE ON STOP BUTTON, "P" INDICATES PILOT LIGHT. (REMOTE UNITS - P.B. IN NEMA I OR NEMA IV ENCLOSURES. PANEL MTD. - 2 POSITION SELECTOR SW.)
- E.P. — EXPLOSION PROOF
- EXPOSED, RIGID, GALVANIZED CONDUIT, 1/2" DIA., WITH 2 #12 CONDUCTORS, UNLESS OTHERWISE NOTED. (-///-) CROSS MARKS INDICATE NO. OF #12 CONDUCTORS.
- CONDUIT CONCEALED IN CEILING OR WALL
- CONDUIT IN OR UNDER FLOOR OR UNDERGROUND
- TELEPHONE RACEWAY
- TELEPHONE OUTLET
- PRI — PRIMARY
- SEC — SECONDARY
- NORMALLY OPEN CONTACTS
- NORMALLY CLOSED CONTACTS
- M — MOTOR STARTER OPERATING SOLENOID
- CR — CONTROL RELAY
- AIR CIRCUIT BREAKER
- R — RED INDICATING LIGHT
- L — "HAND-OFF AUTOMATIC" SELECTOR SWITCH "L" INDICATES PROVISIONS FOR LOCKING IN THE OFF POSITION.
- V — VOLTMETER
- VS — VOLTMETER SWITCH
- WP — WEATHERPROOF
- T — THERMOSTAT
- CLOCK & OUTLET
- EMERGENCY LIGHTING UNIT, 6 VOLT, D.C., NICKLE-CADMIUM BATTERIES, AUTOMATIC CHARGING, WITH 2-25W SEALED BEAM LAMPS. DUAL LITE CAT. PC-15-NC.
- MV — MOTOR OPERATED VALVE
- L — MOMENTARY PUSHBOTTON "L" INDICATES LOCKING DEVICE REQ'D.
- BUZZER, FARADAY CAT. #282 FOR OPERATION ON 120V, A.C.

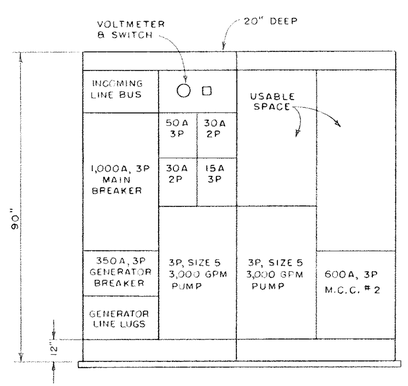

FRONT VIEW - M.C.C. #1

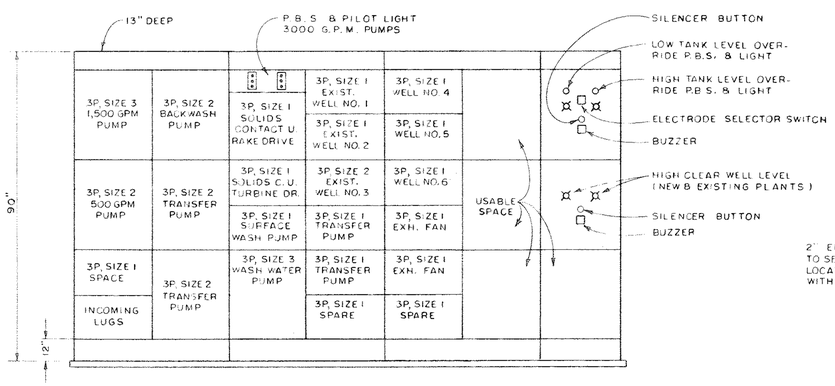

FRONT VIEW - M.C.C. #2

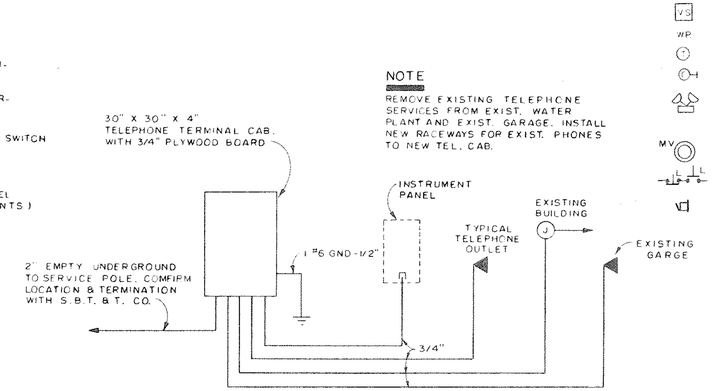

NOTE

REMOVE EXISTING TELEPHONE SERVICES FROM EXIST. WATER PLANT AND EXIST. GARAGE. INSTALL NEW RACEWAYS FOR EXIST. PHONES TO NEW TEL. CAB.

TELEPHONE RISER DIAGRAM

NO SCALE

REV NO	DATE	DRWN	CHKD	REMARKS
0	7/67	JCH	CEB	

ADDITION TO WATER TREATMENT PLANT

CITY OF HALLANDALE
BROWARD COUNTY, FLORIDA

SINGLE LINE DIAGRAM AND LEGEND

PHILPOTT, ROSS & SAARINEN, INC.
ENGINEERS
FORT LAUDERDALE, FLA.

DATE 7/67 — REGISTERED ENGINEER NO. 4017 — SHEET 27 RO

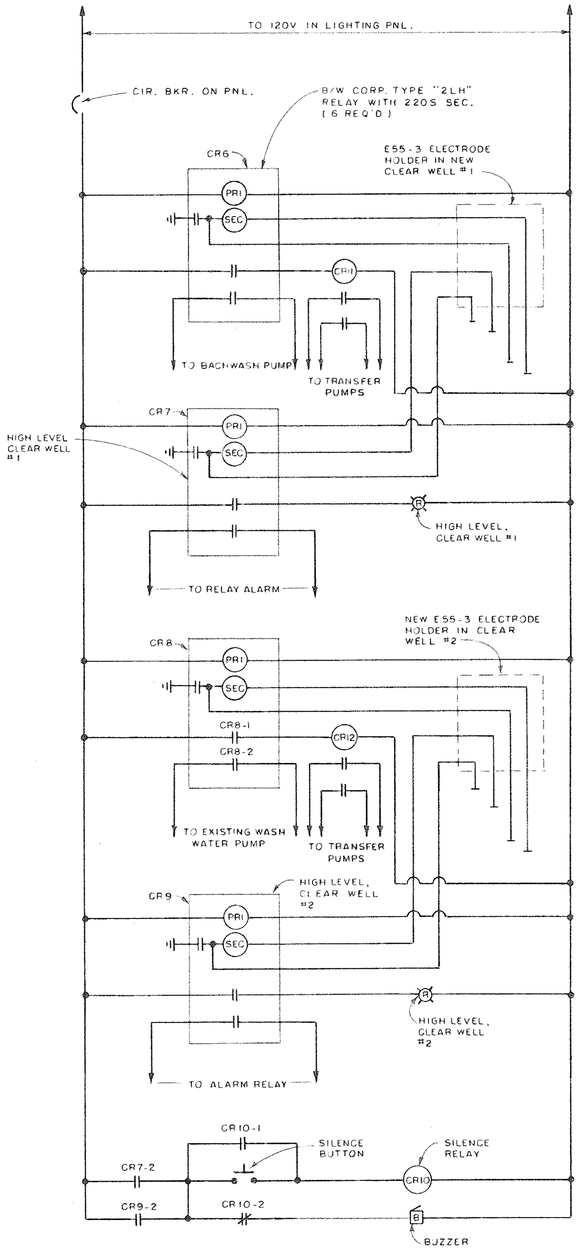

TRANSFER PUMPS AND CLEAR WELL HIGH LEVEL ALARM

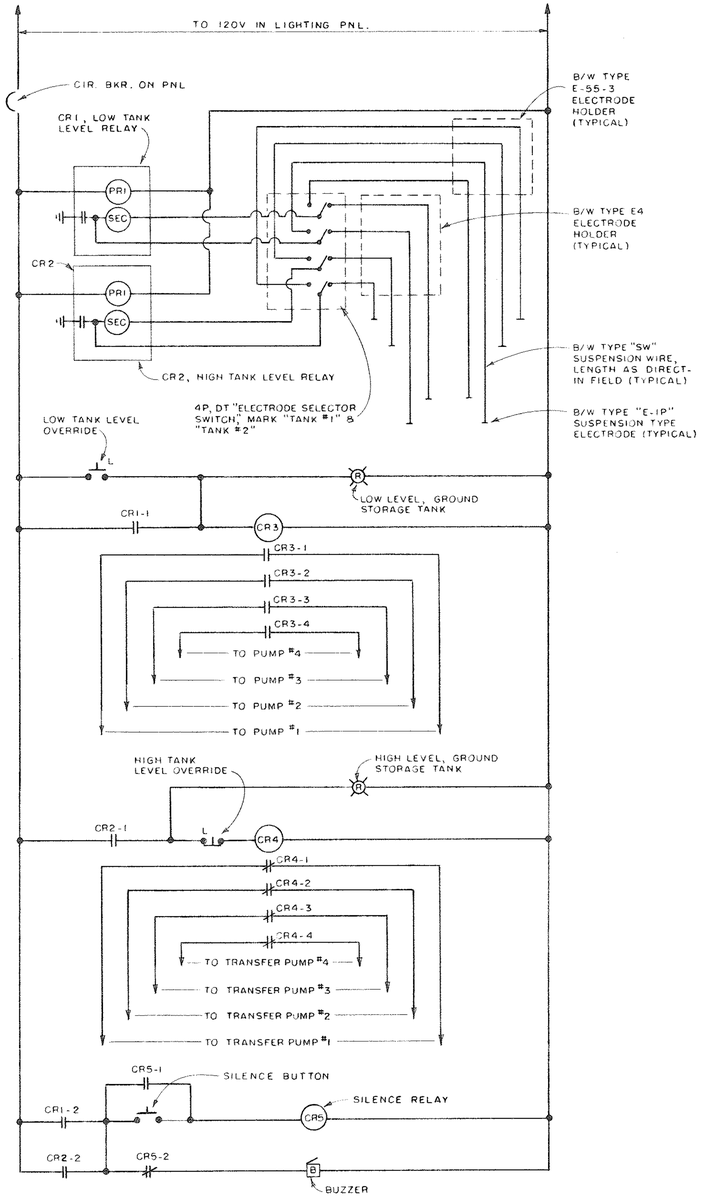

GROUND STORAGE TANK HIGH & LOW LEVEL CUT-OFFS & ALARMS

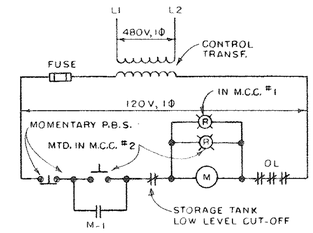

3,000 GPM PUMPS

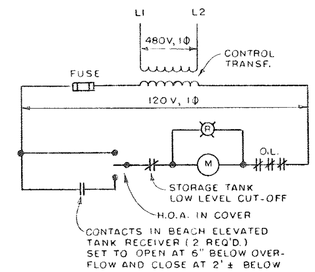

1,500 & 500 GPM PUMPS

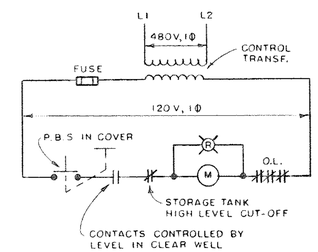

TRANSFER PUMPS

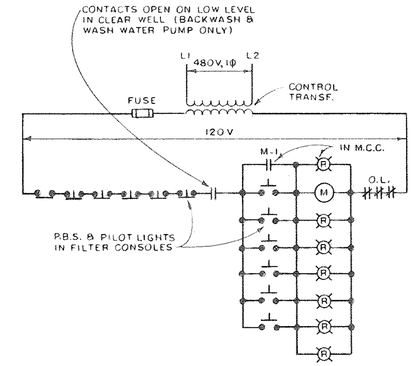

BACKWASH & SURFACE WASH PUMPS

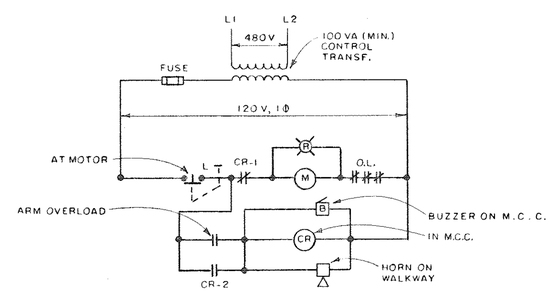

SOLIDS CONTACT UNIT - RAKE DRIVE

ELEMENTARY CONTROL DIAGRAMS

NO SCALE

REV NO	DATE	DRWN	CHKD	REMARKS
0	7/67	JCH	CEB	

ADDITION TO WATER TREATMENT PLANT

CITY OF HALLANDALE
BROWARD COUNTY, FLORIDA

WIRING DIAGRAMS

PHILPOTT, ROSS & SAARINEN, INC.
ENGINEERS
FORT LAUDERDALE, FLA.

DATE 7/67 | REGISTERED ENGINEER NO. 4017 | SHEET 28 RO

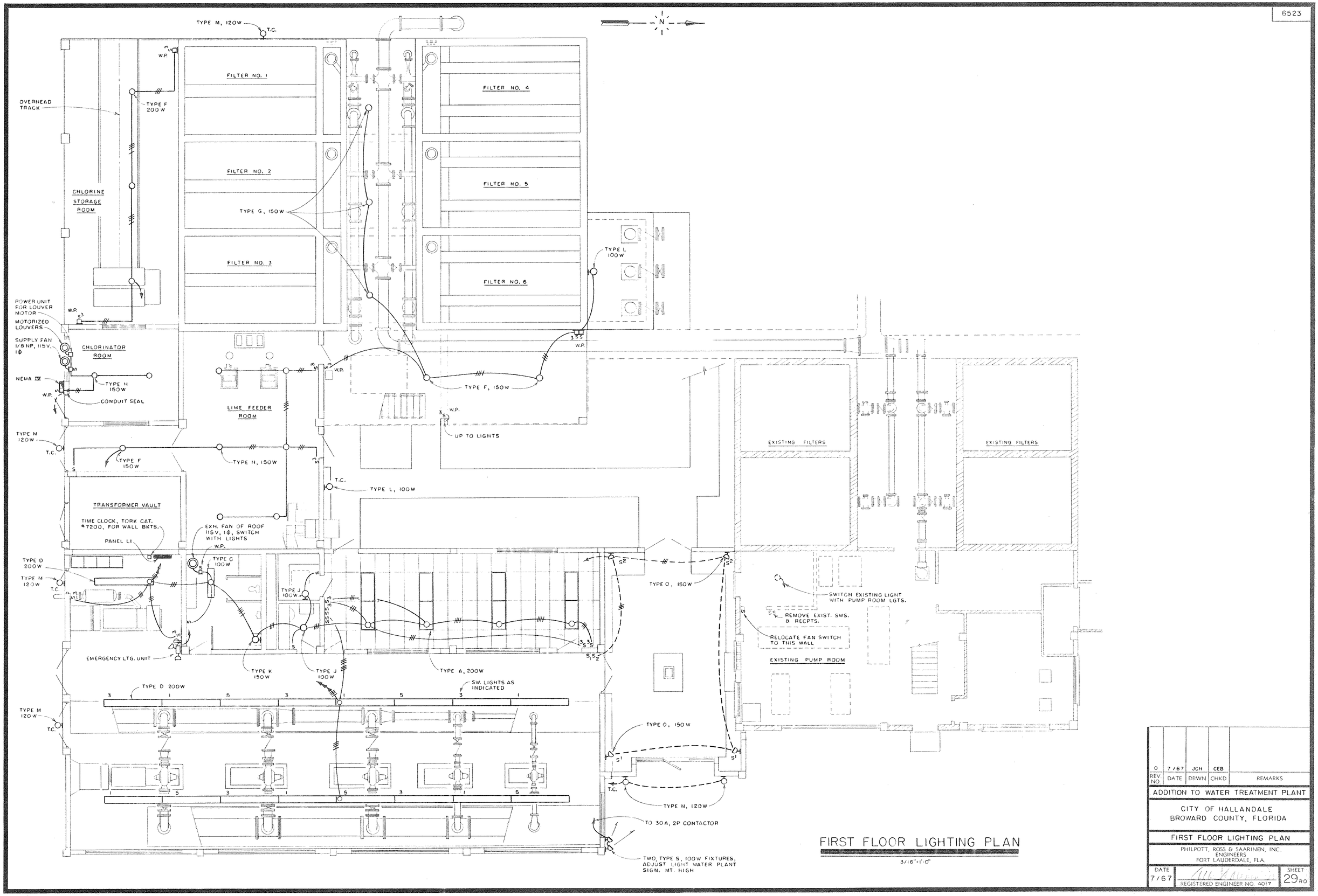

FIRST FLOOR LIGHTING PLAN

3/16"=1'-0"

REV. NO	DATE	DRWN	CHKD	REMARKS
0	7/67	JCH	CEB	

ADDITION TO WATER TREATMENT PLANT

CITY OF HALLANDALE
BROWARD COUNTY, FLORIDA

FIRST FLOOR LIGHTING PLAN

PHILPOTT, ROSS & SAARINEN, INC.
ENGINEERS
FORT LAUDERDALE, FLA.

DATE 7/67

REGISTERED ENGINEER NO. 4017

SHEET 29 RO

6523

RATE OF FLOW CONTROLLER AND TRANSMITTER
MASTER LEVEL TRANSMITTER
JUNCTION BOX
NEW RAW WATER FLOW METER, VALVE AND TRANSMITTER FOR NEW SOLIDS CONTACT UNIT.
1, 4/C - #16 & 1, 3/C - #16 - 1" TO INSTRUMENT PANEL
FILTER #1
DRAIN VALVE
SURFACE WASH VALVE
FILTER #2
RATE OF FLOW CONTROLLER & TRANSMITTER
FILTER #3
COAGULANT & CALGON FEEDERS & MIXERS, 115V, 1Φ
3 SELF-PRIMING CENTRIFUGAL PUMPS, 1/4 HP EA., 115V, 1Φ (P-13, 14 & 15)
FILTER #4
INFLUENT VALVE
FILTER WASH VALVE W/ POSITION TRANSMITTER
FILTER #5
LOSS OF HEAD TRANSMITTER, CONFIRM LOCATION (6 PLACES)
FILTER #6
CHLORINE STORAGE ROOM
W.P.
CHLORINE SAFETY SHUT-OFF VALVE
OVERHEAD HOIST, 208V, 3Φ
20A, 208V, 3Φ, 4W RECEPTACLE, HUBBELL CAT. #7410-G, WITH #7420 PLATE AND #9967 CAP. WALL MOUNT HIGH FOR HOIST.
TO PNL L2
CONDUIT SEAL
PRE-CHLORINATOR
POST CHLORINATOR
CHLORINATOR ROOM
ANLYZER RECORDER CONTROLLER
EQUIPMENT POWER SUPPLY & DISCONNECT SWS. PER APPROVED SHOP DRAWINGS.
30A, 3P
LOW LEVEL SWITCH
SURFACE WASH PUMP P-12 5HP, 460V, 3Φ
LIME FEEDERS & MIXERS, 115V, 1Φ
LIME FEEDER ROOM
VIBRA-SCREW MOTOR, 115V, 1Φ
MANUAL MOTOR STR. IN FS BOX WITH HUBBELL CAT. #7525 COVER (TYP.)
TO ALARM BUZZER IN CONTROL ROOM
TRANSFER PUMP P-6 50 HP, 460V, 3Φ
100A, 3P, W.P.
TRANSFER PUMP P-7 50HP, 460V, 3Φ
BACKWASH PUMP P-8 50HP, 460V, 3Φ
BACKWASH RATE OF FLOW CONTROLLER
ELECTRODE HOLDER
4 #14-3/4" TO M.C.C. #2

SAME AS CONSOLE #4
2 #12-1/2" TO LIGHTING PANEL
2/C - 11/2"
MASTER LEVEL TRANSMITTER
BACKWASH VALVE & TRANSMITTER
1, 3/C - 1/2"
1, 4/C - 1/2"
1, 4/C & 1, 3/C - 1"
FILTER CONSOLE #1
FILTER CONSOLE #4
FILTER CONSOLE #2
FILTER CONSOLE #5
FILTER CONSOLE #3
FILTER CONSOLE #6
1, 8/C - 3/4"
1, 8/C - 3/4" (PUMP CONTROL)
1, 8/C - 3/4" (PUMP CONTROL)
1, 8/C - 3/4" (1 SPARE COND.)
2-4/C #16 - 1" TO STARTERS FOR BACKWASH PUMP & SURFACE WASH PUMP IN M.C.C. #2
1, 3/C - 1/2"
1, 2/C - 1/2"
2, 3/C - 3/4"
2, 4/C & 1, 3/C - 1"
1, 3/C - 1/2"
1, 4/C - 1/2"
INFLUENT VALVE
DRAIN VALVE
SURFACE WASH VALVE
FILTER WASH VALVE
VALVE POSITION TRANSMITTER
RATE OF FLOW CONTROLLER & TRANSMITTER
LOSS OF HEAD TRANSMITTER
TYPICAL (6 PLACES)
FS TYPE BOX WITH BLANK COVER & GASKET & HUBS AS REQ'D. DO NOT SPLICE CONDUCTORS (TYPICAL)
P.B.S. FOR BACKWASH PUMP & SURFACE WASH PUMP TO BE FURNISHED WITH CONSOLE (TYPICAL)
CONSOLE TO BE FURNISHED WITH TERMINAL BLOCK FOR ALL EXTERNAL CONNECTIONS (TYPICAL)

NOTE
SEE THE CONSOLE MFR'S. APPROVED WIRING DIAGRAMS FOR CONNECTIONS.

INSTRUMENTATION CONDUIT RISER
NO SCALE

TRANSFORMER VAULT
PRIMARY CONDUITS
1,000A BUS INTO VAULT
30A, 3P LTG. CONTACTOR WITH H.O.A. IN COVER FOR FLOODLIGHTS
FIRESTOP
TWO MOTOR OPERATED VALVE CONTROLLERS BELOW TRANSF.
30A, 3P
3 #10-3/4" TO PNL. L1
STORAGE AREA
CONTROL PANEL
TELEPHONE CAB.
HEAT PUMP 208 V, 3Φ
TO THERMOSTAT
WALL MTD. CLOCK OUTLET & CLOCK, EDWARDS CAT. #2535-14
FOUNTAIN PUMP 115V, 1Φ
MOTOR CONTROL CENTER #1
PANEL L1
30 KVA TRANSF. MT. HIGH ON WALL
2 #10-3/4"
MOTOR CONTROL CENTER #2
CHLORINE ALARM BUZZER, WALL MOUNT HIGH.
DIESEL ELECTRIC SET
FLOAT SWITCH IN DAY TANK
INSTRUMENT PANEL
FRONT
CONTROL ROOM
RECEPTACLES FURN. WITH CAB.
EXHAUST FAN, 1 HP, 460V, 3Φ
30A, 3P
FUEL OIL TRANSFER PUMP, P-16, 115V, 1Φ
TORK CAT. #2000A PHOTO-ELEC. CELL ON ROOF
E.W.C.
E.W.H., 5KW, 208V, 1Φ
PRESSURE TRANSMITTER
FOUNTAIN
HIGH SERVICE FLOW TRANSMITTER
3,000 GPM PUMP P-2 150 HP, 460V, 3Φ
3,000 GPM PUMP, P-3 150 HP, 460V, 3Φ
RELOCATED 1,500 GPM PUMP, P-4 75 HP, 460V, 3Φ
RELOCATED 500 GPM PUMP, P-5 40 HP, 460V, 3Φ
30A, 3P
DIESEL ENGINE P-1
EXHAUST FAN, 1 HP, 460V, 3Φ
FUEL OIL TRANSFER PUMP, P-17, 115V, 1Φ
BATTERY RACK & BATTERIES
FLOAT SWITCH IN DAY TANK
SUMP PUMP P-18 1/2 HP, 115V, 1Φ
LEADS IN RACEWAY TO STARTERS
WALL MTD. BATTERY CHARGER

EXISTING FILTER #2
EXISTING FILTER #4
EXISTING WASH WATER PUMP TO REMAIN 40 HP, 460V, 3Φ
NEW 100A, 3P
REMOVE EXIST. FLOAT SWITCH & BOLT NEW ELECTRODE HOLDER TO FLOOR
4 #14-3/4" TO M.C.C. #2
EXISTING EQUIPMENT TO BE REMOVED
TWO EXISTING PUMPS TO BE RELOCATED
NEW 30A, 3P
NEW 30A, 2P
REMOVE ALL EXISTING SWITCHES, STARTERS, PANELS, CONTROLS, WIRING GUTTERS, CONDUCTORS AND RACEWAYS EXCEPT AS NOTED. REMOVE CONDUCTORS FROM RACEWAYS UNDER THE FLOOR. REPAIR WALLS.
REMOVE EXIST. CONDUCTORS & INSTALL NEW 3 #10 IN EXIST. CONDUIT
EXISTING TRANSFER PUMPS TO REMAIN, 10HP EACH 460V, 3Φ
EXISTING LIGHTING PANEL TO REMAIN
EXISTING DRY TYPE TRANSF. TO REMAIN

FIRST FLOOR POWER & COMMUNICATIONS PLAN
3/16" = 1'-0"

REV NO	DATE	DRWN	CHKD	REMARKS
0	7/67	JCH	CEB	

ADDITION TO WATER TREATMENT PLANT

CITY OF HALLANDALE
BROWARD COUNTY, FLORIDA

FIRST FL. POWER & COMM. PLAN

PHILPOTT, ROSS & SAARINEN, INC.
ENGINEERS
FORT LAUDERDALE, FLA.

DATE 7/67
REGISTERED ENGINEER NO. 4017
SHEET 30 RO

6523

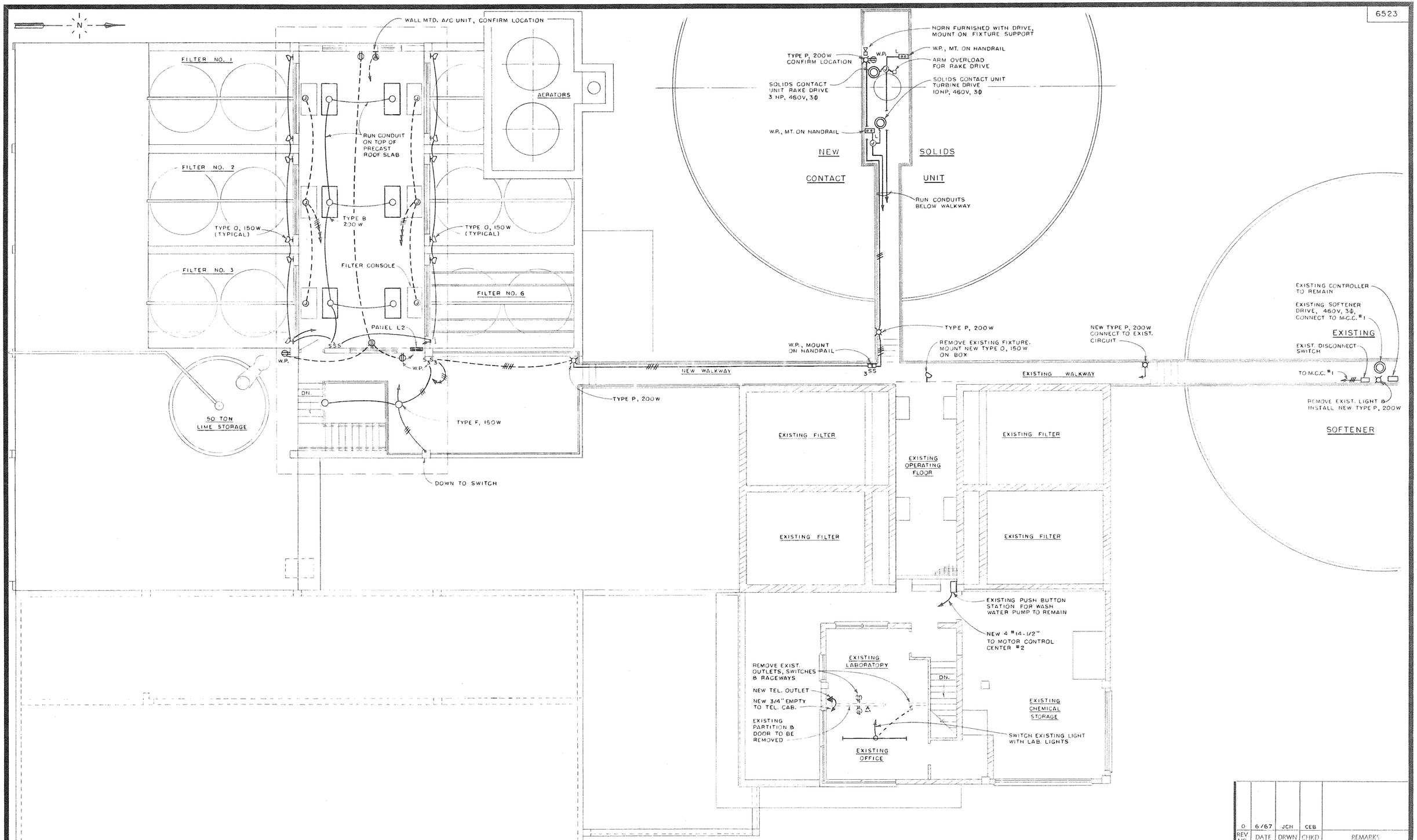

SECOND FLOOR PLAN

3/16" = 1'-0"

REV. NO.	DATE	DRWN	CHKD	REMARKS
0	6/67	JCH	CEB	

ADDITION TO WATER TREATMENT PLANT

CITY OF HALLANDALE
BROWARD COUNTY, FLORIDA

SECOND FLOOR ELECTRICAL PLAN

PHILPOTT, ROSS & SAARINEN, INC.
ENGINEERS
FORT LAUDERDALE, FLA.

DATE 7/67

REGISTERED ENGINEER NO. 4017

SHEET 31 RO

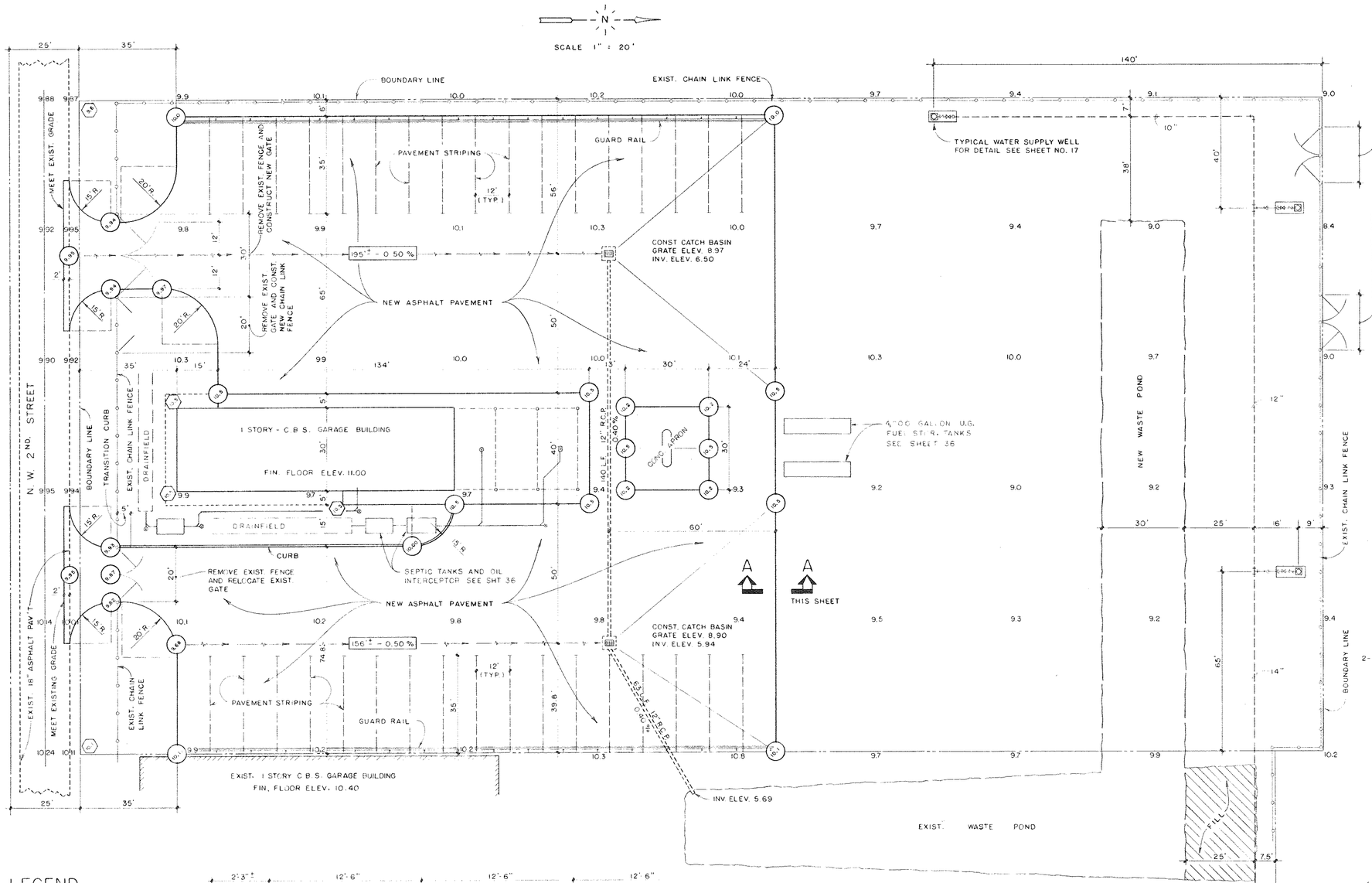

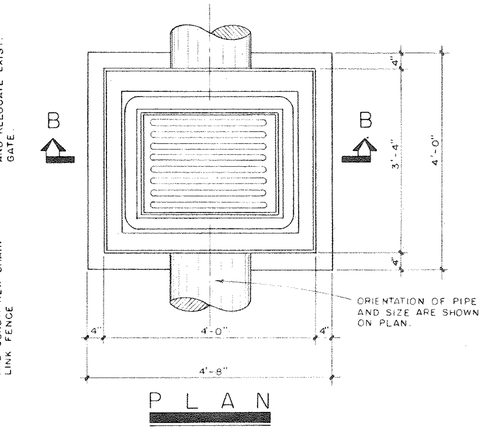

TYPICAL CATCH BASIN

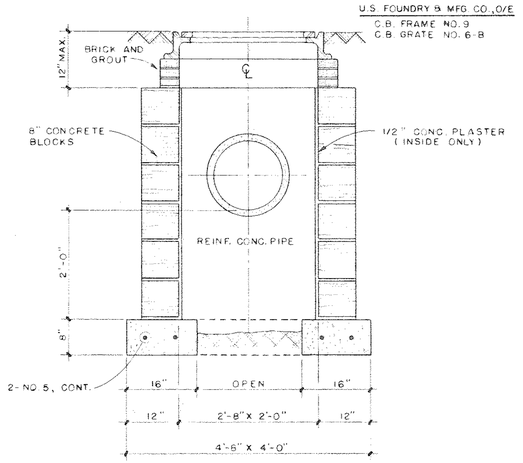

SECTION B-B

(3/4" = 1'-0")

LEGEND

9.6 EXISTING GRADE

(9.6) NEW PAVEMENT GRADE

(9.6) NEW FINISH GRADE

NOTE

ELEVATIONS REFER TO U.S.C. AND G.S. (MEAN SEA LEVEL) DATUM.

BENCH MARK LOCATION SHOWN ON SHEET NO. 2.

THE CONTRACTOR SHALL EXCAVATE EXISTING WASTE POND AND REMOVE ALL SLUDGE FROM PLANT SITE AREA.

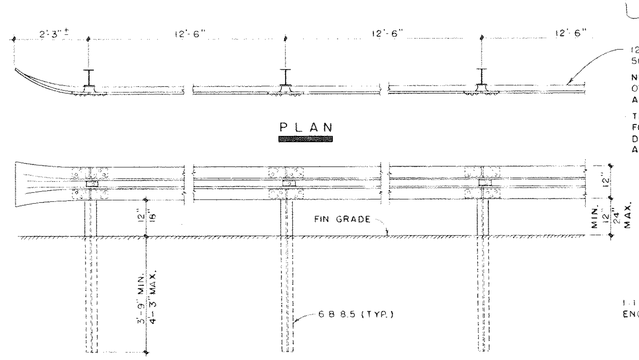

12 GAUGE 30 CARBON STEEL 50,000 LB. BREAKING STRENGTH AT JOINTS

NUTS AND BOLTS TO BE GALVANIZED AND ALL OTHER PARTS TO BE PAINTED ONE SHOP COAT OF A RUST-INHIBITIVE PRIMER.

THE CONTRACTOR SHALL SUBMIT DETAIL DWG'S FOR APPROVAL, THE EXACT HEIGHT AND DISTANCE FROM EDGE OF PAVING SHALL BE AS DIRECTED IN THE FIELD.

GUARD RAIL DETAIL

NOT TO SCALE

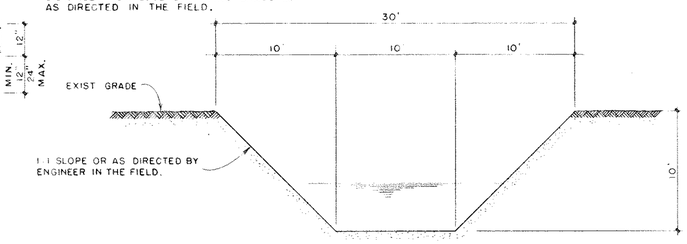

WASTE POND SECTION

NOT TO SCALE

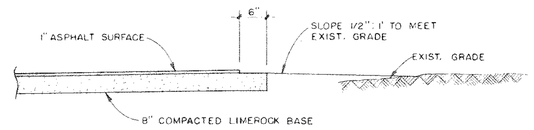

PAVEMENT DETAIL - SECTION A-A

NOT TO SCALE

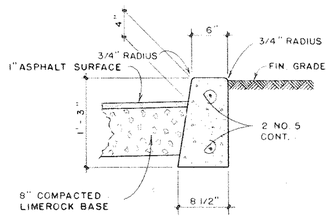

TYPICAL CURB DETAIL

1" = 1'-0"

REV NO	DATE	DRWN	CHKD	REMARKS
0	7/67	G.C.A.	O.L.	

ADDITION TO WATER TREATMENT PLANT

CITY OF HALLANDALE
BROWARD COUNTY, FLORIDA

SITE, GRADING & PAVING PLAN

PHILPOTT, ROSS & SAARINEN, INC.
ENGINEERS
FORT LAUDERDALE, FLA.

DATE 7/67

REGISTERED ENGINEER NO. 4017

SHEET 32 RO

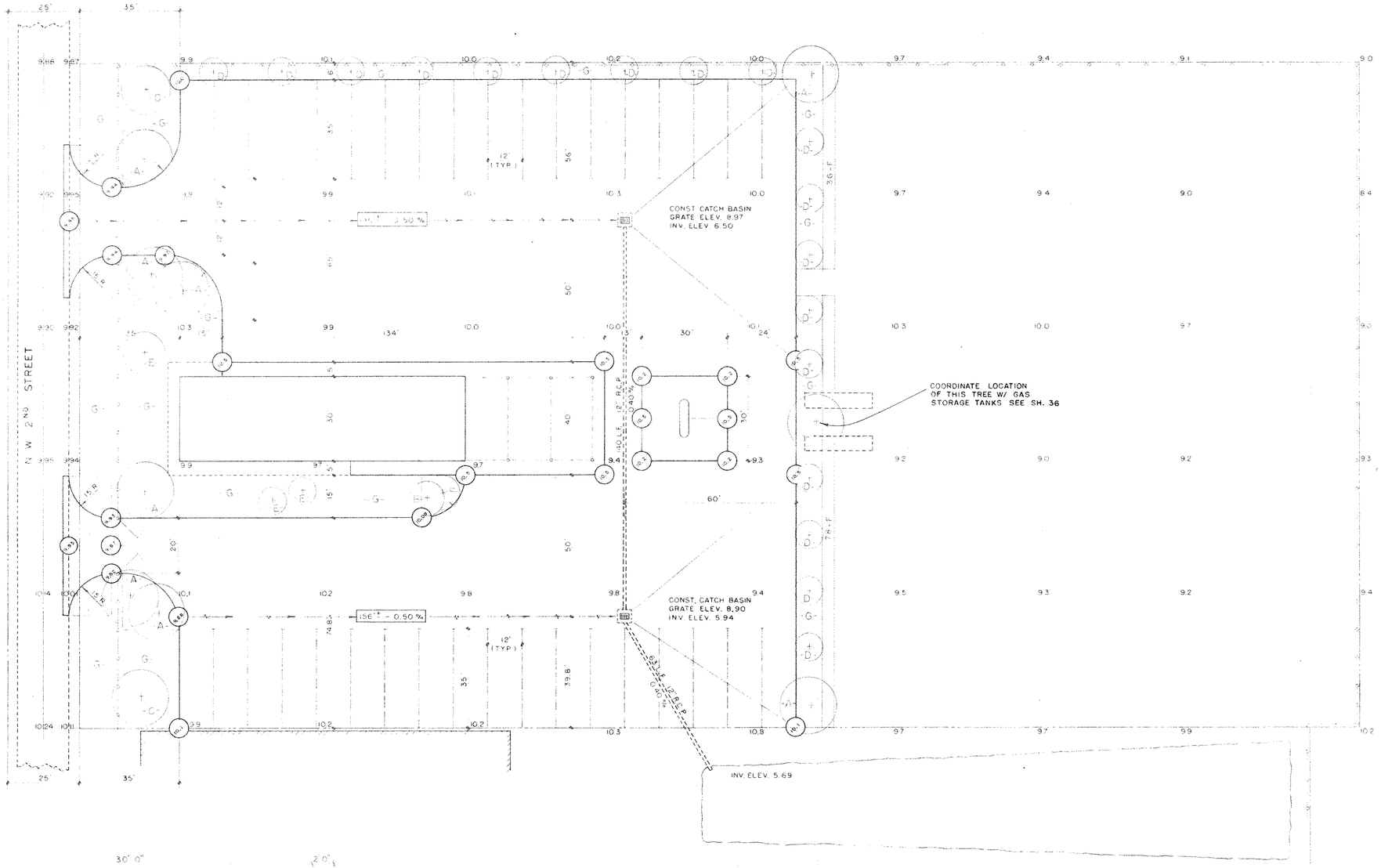

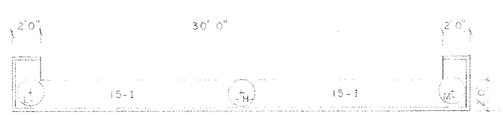

FRONT PLANTER
3/16" = 1'0"

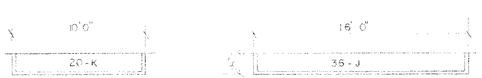

SIDE PLANTERS
3/16" = 1'0"

NOTES:

SEE SPECS FOR PLANT LISTS.

REFER TO GRADING & PAVING PLANS FOR ELEVATIONS. — THIS DWG IS FOR LANDSCAPE WORK ONLY.

REV NO	DATE	DRWN	CHKD	REMARKS
0	7/67	P.R.	P.R.	

ADDITION TO WATER TREATMENT PLANT

CITY OF HALLANDALE
BROWARD COUNTY, FLORIDA

LANDSCAPE PLAN

PHILPOTT, ROSS & SAARINEN, INC
ENGINEERS
FORT LAUDERDALE, FLA

DATE 7/67 | REGISTERED ENGINEER NO. 4017 | SHEET 33 RO

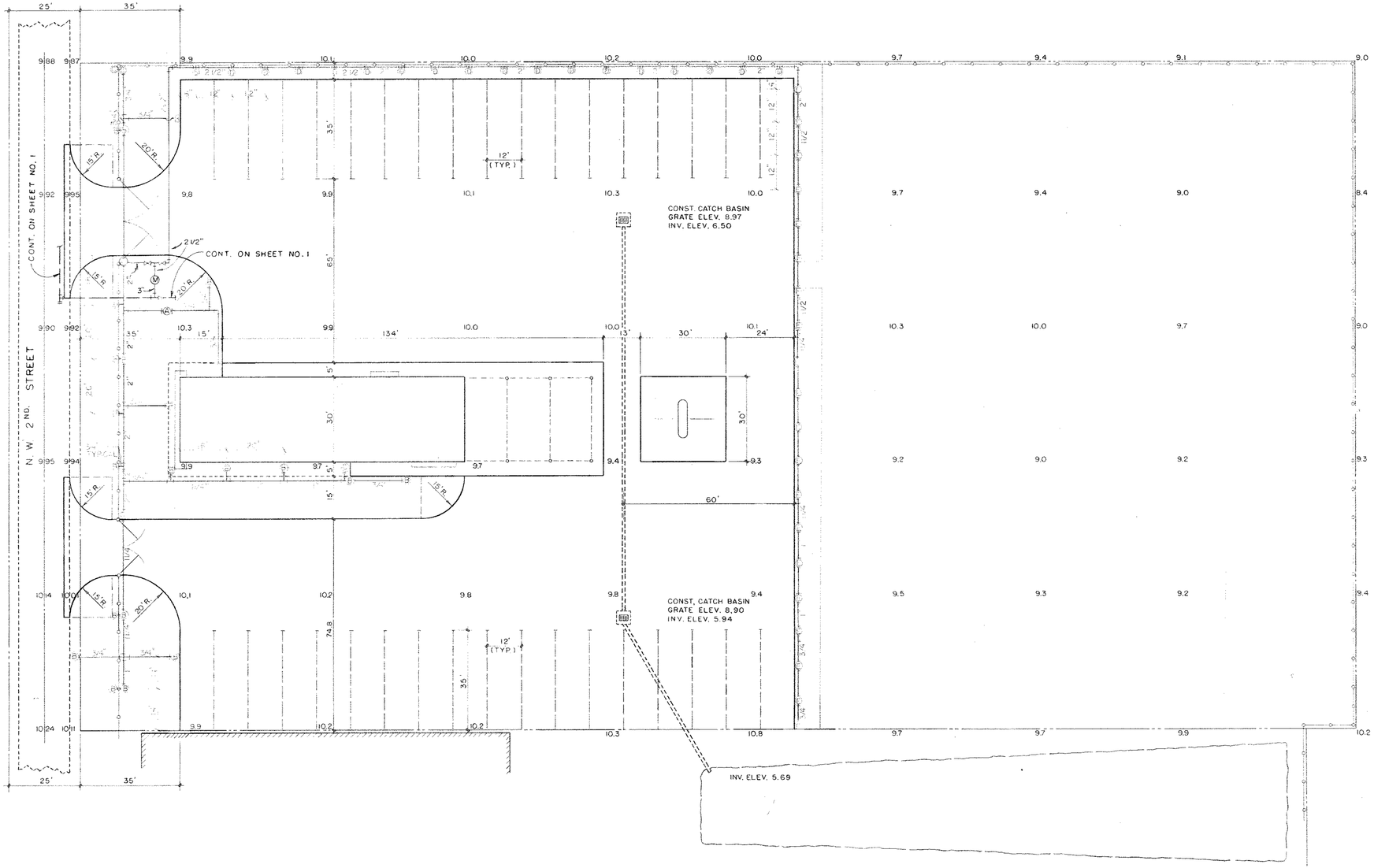

LAWN SPRINKLER PLAN

1 = 20'

LEGEND

A	RAIN BIRD	NO. 17-1 SS-F	SPRINKLER	1/2" CON.
B	" "	NO. 17-1 SS-H	"	1/2" CON.
C	" "	NO. 17-1 SS-Q	"	1/2" CON.
D	BUCKNER	NO. 400 ST-10	"	1/2" CON.
E	"	NO. 403 D-HU	"	1/2" CON.
F	"	NO. 403 D-QU	"	1/2" CON.

- - W 2" WATER METER 3" SERVICE
—⊠— BUCKNER SERIES 500 A-VALVE VALVE
—— TYPE 1, SCHEDULE 40, P.V.C. PIPE

PROVIDE VACUUM BRKS ALL CIRCUITS

NOTES:

REFER TO GRADING & PAVING PLAN FOR ELEVATIONS. — THIS DWG IS FOR LAWN SPRINKLER WORK ONLY.

REV NO	DATE	DRWN	CHKD	REMARKS
0	7/67	PR	P.R.	

ADDITION TO WATER TREATMENT PLANT

CITY OF HALLANDALE
BROWARD COUNTY, FLORIDA

LAWN SPRINKLER PLAN

PHILPOTT, ROSS & SAARINEN, INC.
ENGINEERS
FORT LAUDERDALE, FLA.

DATE 7/67

REGISTERED ENGINEER NO. 4017

SHEET 34 RO

City of Hallandale Beach

Water Treatment Plant

High Service Pump Replacement

Attachment D

1977 Yard Piping Drawings

The attached drawings are provided for informational purposes with the Contract Documents. The attached drawings are not a part of the Contract Documents. The City of Hallandale Beach and Hazen and Sawyer make no guarantee, either expressed or implied, as to accuracy or completeness of the drawings.

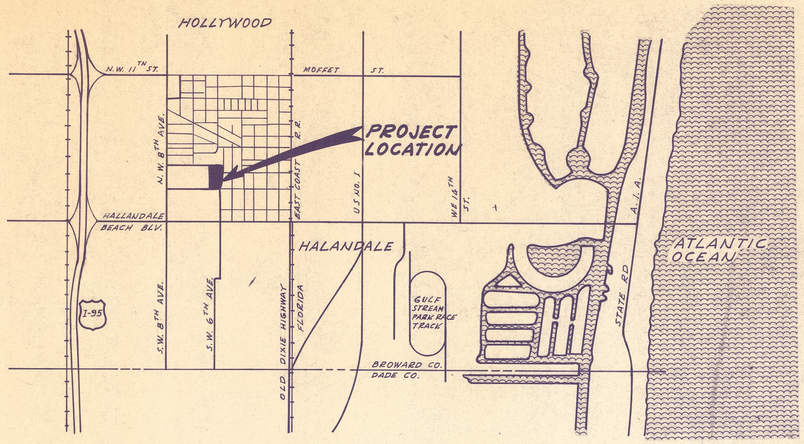

VICINITY MAP
SCALE: 1" = 2000'

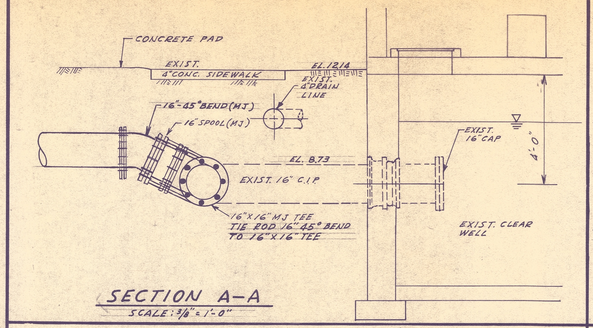

SECTION A-A
SCALE: 3/8" = 1'-0"

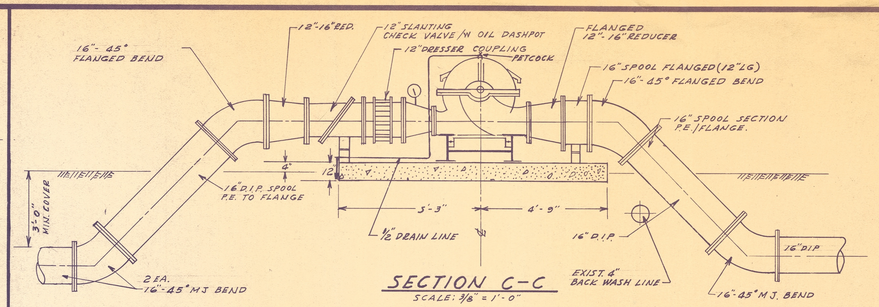

SECTION C-C
SCALE: 3/8" = 1'-0"

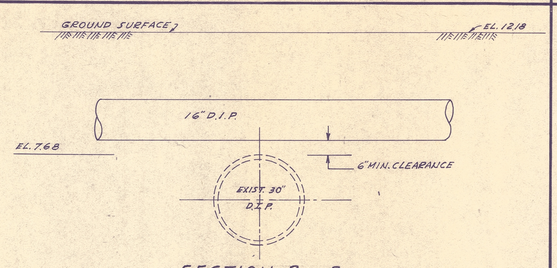

SECTION B-B
SCALE: 3/8" = 1'-0"

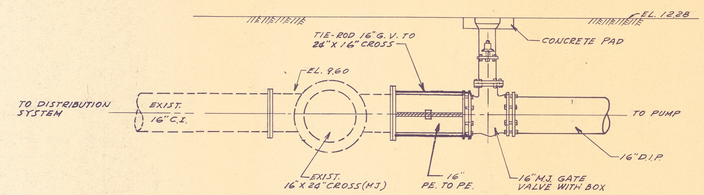

SECTION D-D
SCALE: 3/8" = 1'-0"

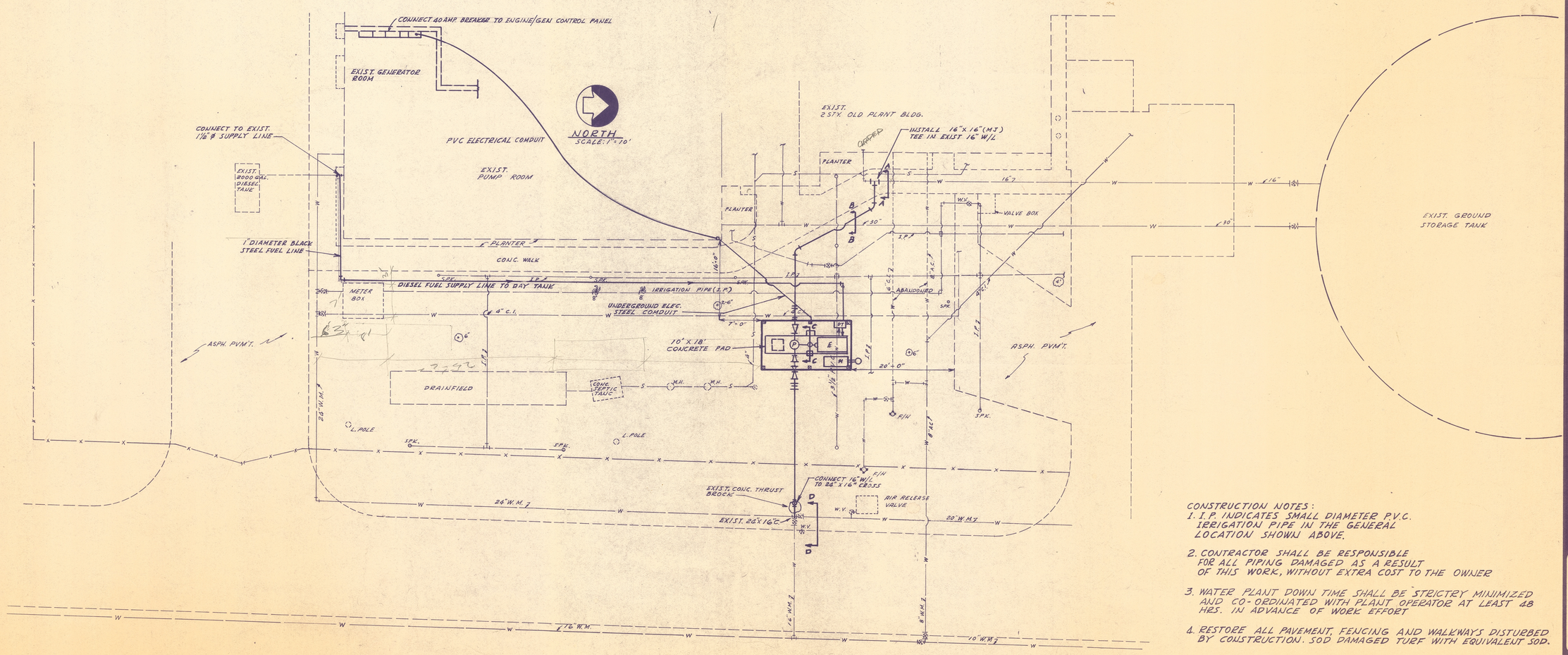

CONSTRUCTION NOTES:

1. I.P. INDICATES SMALL DIAMETER P.V.C. IRRIGATION PIPE IN THE GENERAL LOCATION SHOWN ABOVE.
2. CONTRACTOR SHALL BE RESPONSIBLE FOR ALL PIPING DAMAGED AS A RESULT OF THIS WORK, WITHOUT EXTRA COST TO THE OWNER
3. WATER PLANT DOWN TIME SHALL BE STRICTRY MINIMIZED AND CO-ORDINATED WITH PLANT OPERATOR AT LEAST 48 HRS. IN ADVANCE OF WORK EFFORT
4. RESTORE ALL PAVEMENT, FENCING AND WALKWAYS DISTURBED BY CONSTRUCTION. SOD DAMAGED TURF WITH EQUIVALENT SOD.

REVISION	DATE
1	
2	
3	
4	
5	

ENG. IN CHARGE THOMAS G. LOCHRANE P.E.
REG. NO. 20111

HALLANDALE
INTERIM PUMP/ENGINE
SITE PLAN/PIPING LAYOUT

Boyle Engineering Corporation

ACCT. 0-411-02.00
DATE 1977
SCALE AS SHOWN
DESIGNED R.G.L.
REVIEWED W.E.F.
DRAWN W.C.C.

SHEET 2 OF 4

City of Hallandale Beach

Water Treatment Plant

High Service Pump Replacement

Attachment E

2008 Water Plant Record Drawings

"6 MGD Membrane Softening Water Treatment Plant"

The attached drawings are provided for informational purposes with the Contract Documents. The attached drawings are not a part of the Contract Documents. The City of Hallandale Beach and Hazen and Sawyer make no guarantee, either expressed or implied, as to accuracy or completeness of the drawings.

CITY OF HALLANDALE BEACH

6 MGD MEMBRANE SOFTENING WATER TREATMENT PLANT

CITY COMMISSION

JOY F. COOPER, Mayor

WILLIAM JULIAN, Vice Mayor

DOROTHY ROSS, Commissioner

FRANCINE S. SCHILLER, Commissioner

JOSEPH A. GIBBONS, Commissioner

D. MIKE GOOD, City Manager

JENNY CHERETIS, Director of Public Works/ Utilities and Engineering

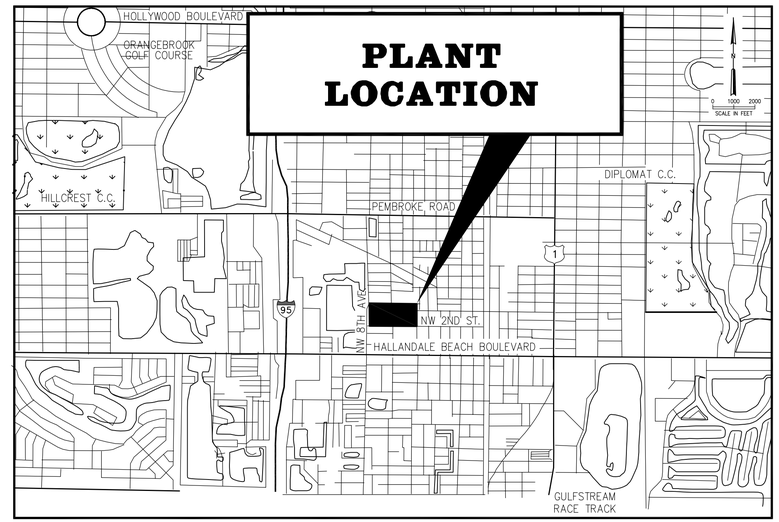

LOCATION MAP

HAZEN AND SAWYER
Environmental Engineers & Scientists
4000 Hollywood Boulevard, Suite 750N
Hollywood, Florida 33021
Certificate of Authorization Number: 2771

JANUARY 2008
VOLUME 4

RECORD DRAWINGS

NOTICE

THESE "RECORD DRAWINGS" REPRESENT THE FINAL "AS-BUILT" CONDITIONS OF THE CONSTRUCTION PROJECT BASED UPON FIELD OBSERVATION, SUPPORTING PROJECT RECORDS AND INFORMATION FURNISHED BY OTHERS. THE ENGINEER WILL NOT BE RESPONSIBLE FOR ANY ERRORS OR OMISSIONS WHICH HAVE BEEN INCORPORATED INTO THESE DRAWINGS AS A RESULT OF THE INFORMATION OR WORK FURNISHED OR DONE BY OTHERS.

PATRICK A. DAVIS, P.E. No. 37167
GENERAL/CIVIL/MECHANICAL

MARIO CARTAYA No. AAC001388
ARCHITECTURE/HVAC/PLUMBING

LUIS P. AMARAL, P.E. No. 47573
INSTRUMENTATION

SHAJAN JOYKUTTY, P.E. No. 43323
STRUCTURAL

MARK E. LUTHER No. 48801
ELECTRICAL

TITLE SHEET AND LOCATION MAP
SHEET 1 OF 162
DRAWING No. G-1

H&S PROJECT No. 40406 / CITY PROJECT No. - 6 MGD MEMBRANE SOFTENING WATER TREATMENT PLANT

PLOT DATE 11/12/04 11:32am FILE= H:\40406\GEN\40406G01 by GDIAZ XREF FILE = NONE

SHEET	DRAWING	TITLE
		GENERAL
1	G – 1	TITLE SHEET AND LOCATION MAP
2	G – 2	INDEX OF DRAWINGS
3	G – 3	ABBREVIATIONS, SYMBOLS, SECTION AND DETAIL IDENTIFICATION
		CIVIL
4	C – 1	SITE DEMOLITION PLAN
5	C – 2	SITE PLAN
6	C – 3	DRAINAGE AND GRADING PLAN
7	C – 3A	ON–SITE STORMWATER RETENTION POND
8	C – 4	STAKING PLAN
9	C – 5	MISCELLANEOUS CIVIL DETAILS SHEET 1
10	C – 6	MISCELLANEOUS CIVIL DETAILS SHEET 2
11	C – 7	MISCELLANEOUS CIVIL DETAILS SHEET 3
		MECHANICAL
12	M – 1	YARD PIPING DEMOLITION
13	M – 2	YARD PIPING PLAN
14	M – 2A	YARD PIPING PARTIAL PLAN
15	M – 3	YARD PIPING PARTIAL PLAN
16	M – 4	YARD PIPING SECTIONS – SHEET 1
17	M – 5	YARD PIPING SECTIONS – SHEET 2
18	M – 6	RAW WATER PIPING PLAN
19	M – 6A	RAW WATER PIPING PLAN
20	M – 7	RAW WATER VAULTS PLANS AND SECTIONS
21	M – 8	NF PROCESS BUILDING BOTTOM PLAN AND DETAIL
22	M – 9	NF PROCESS BUILDING FIRST FLOOR PLAN
23	M – 9A	NF PROCESS BUILDING FIRST FLOOR PLAN
24	M – 10	NF PROCESS BUILDING PARTIAL PLAN AND SCHEMATIC
25	M – 11	NF PROCESS BUILDING PARTIAL PLAN AND SCHEMATIC
26	M – 12	NF PROCESS BUILDING PARTIAL PLAN, SECTION AND DETAIL
27	M – 12A	NF PROCESS BUILDING SECTION
28	M – 13	NF PROCESS BUILDING SECTION
29	M – 14	NF PROCESS BUILDING SECTION
30	M – 15	NF PROCESS BUILDING SECTION
31	M – 16	NF PROCESS BUILDING SECTIONS AND DETAIL
32	M – 17	NF PROCESS BUILDING SECTIONS AND DETAIL
33	M – 18	DEGASIFIERS BOTTOM PLAN
34	M – 19	DEGASIFIERS TOP PLAN
35	M – 20	DEGASIFIERS SECTIONS AND DETAIL
36	M – 21	CHEMICAL INJECTION VAULT 1 AND 2 PLANS AND SECTIONS
37	M – 22	SAMPLE PUMPS AND INJECTION WELLHEAD CONNECTION DETAILS
38	M – 23	SULFURIC ACID FEED SYSTEM SCHEMATIC
39	M – 24	ANTISCALANT FEED SYSTEM SCHEMATIC
40	M – 25	SODIUM HYDROXIDE FEED SYSTEM SCHEMATIC
41	M – 26	SEQUESTRANT AND CHLORINE FEED SYSTEMS SCHEMATICS
42	M – 27	CONCENTRATE PUMP STATION PLAN, SECTIONS AND DETAIL
43	M – 28	EMERGENCY GENERATOR BUILDING PLAN, SECTIONS AND DETAILS
44	M – 29	PROCESS FLOW DIAGRAM
45	M – 30	MECHANICAL STANDARD DETAILS
46	M – 31	FUEL STORAGE TANK PLAN AND SECTIONS
		INSTRUMENTATION
47	I – 1	INSTRUMENTATION AND CONTROL SYMBOLS AND LEGEND
48	I – 2	INSTRUMENTATION AND CONTROL CONTROL SYSTEM BLOCK DIAGRAM
49	I – 3	INSTRUMENTATION AND CONTROL PRETREATMENT
50	I – 4	INSTRUMENTATION AND CONTROL NF FEED WATER INLET VALVES / FEED PUMPS
51	I – 5	INSTRUMENTATION AND CONTROL NF UNITS
52	I – 6	INSTRUMENTATION AND CONTROL DEGASIFIERS
53	I – 7	INSTRUMENTATION AND CONTROL CONCENTRATE INJECTION AND MONITORING WELLS
54	I – 8	INSTRUMENTATION AND CONTROL SULFURIC ACID SYSTEM
55	I – 9	INSTRUMENTATION AND CONTROL ANTISCALANT SYSTEM
56	I – 10	INSTRUMENTATION AND CONTROL SODIUM HYDROXIDE SYSTEM
57	I – 11	INSTRUMENTATION AND CONTROL SEQUESTRANT SYSTEM
58	I – 12	INSTRUMENTATION AND CONTROL NF CLEANING SYSTEM
59	I – 13	INSTRUMENTATION AND CONTROL EMERGENCY GENERATOR SYSTEM
60	I – 14	INSTRUMENTATION AND CONTROL MISCELLANEOUS SYSTEMS
61	I – 15	INSTRUMENTATION AND CONTROL OPERATIONS CONTROL CENTER
62	I – 16	INSTRUMENTATION AND CONTROL EXISTING LIME PLANT CONTROL ROOM MODIFICATION
63	I – 17	INSTRUMENTATION AND CONTROL ENCLOSURE DETAIL
64	I – 18	INSTRUMENTATION AND CONTROL INSTALLATION DETAILS SHEET 1
65	I – 19	INSTRUMENTATION AND CONTROL INSTALLATION DETAILS SHEET 2
66	I – 20	INSTRUMENTATION AND CONTROL DETAIL SCHEMATICS SHEET 1
67	I – 21	INSTRUMENTATION AND CONTROL DETAIL SCHEMATICS SHEET 2
68	I – 22	INSTRUMENTATION AND CONTROL CLEANING SYSTEM PANEL
		STRUCTURAL
69	S – 1	STRUCTURAL GENERAL NOTES
70	S – 2	NF PROCESS BUILDING BOTTOM PLAN
71	S – 3	NF PROCESS BUILDING FIRST FLOOR PLAN
72	S – 4	NF PROCESS BUILDING SECOND FLOOR PLAN
73	S – 5	NF PROCESS BUILDING ROOF PLAN
74	S – 6	NF PROCESS BUILDING SECTIONS SHEET 1
75	S – 7	NF PROCESS BUILDING SECTIONS SHEET 2
76	S – 8	NF PROCESS BUILDING SECTIONS SHEET 3
77	S – 9	NF PROCESS BUILDING SECTIONS AND DETAILS SHEET 1
78	S – 10	NF PROCESS BUILDING SECTIONS AND DETAILS SHEET 2
79	S – 11	NF PROCESS BUILDING SECTIONS AND DETAILS SHEET 3
80	S – 12	NF PROCESS BUILDING SECTIONS AND DETAILS SHEET 4

SHEET	DRAWING	TITLE
		STRUCTURAL (CONT)
81	S – 13	NF PROCESS BUILDING SECTIONS AND DETAILS SHEET 5
82	S – 14	NF PROCESS BUILDING COLUMN SCHEDULE AND DETAILS
83	S – 15	NF PROCESS BUILDING BEAM SCHEDULE AND DETAILS
84	S – 16	DEGASIFIERS BOTTOM AND ROOF PLANS
85	S – 17	DEGASIFIERS SECTIONS AND DETAILS SHEET 1
86	S – 18	DEGASIFIERS SECTIONS AND DETAILS SHEET 2
87	S – 19	CONCENTRATE PUMP STATION/VAULTS PLANS, SECTIONS AND DETAILS
88	S – 20	EMERGENCY GENERATOR BUILDING BOTTOM AND ROOF PLANS
89	S – 21	EMERGENCY GENERATOR BUILDING SECTIONS AND DETAILS SHEET 1
90	S – 22	EMERGENCY GENERATOR BUILDING SECTIONS AND DETAILS SHEET 2
91	S – 23	STRUCTURAL STANDARD DETAILS SHEET 1
92	S – 24	STRUCTURAL STANDARD DETAILS SHEET 2
93	S – 25	STRUCTURAL STANDARD DETAILS SHEET 3
94	S – 26	STRUCTURAL STANDARD DETAILS SHEET 4
95	S – 27	STRUCTURAL STANDARD DETAILS SHEET 5
96	S – 27A	NF PROCESS BUILDING PARTIAL FIRST FLOOR PLAN
		ARCHITECTURAL
97	A – 1	NF PROCESS BUILDING FIRST FLOOR PLAN
98	A – 2	NF PROCESS BUILDING SECOND FLOOR PLAN
99	A – 3	NF PROCESS BUILDING FIRST FLOOR REFLECTED CEILING PLAN
100	A – 4	NF PROCESS BUILDING SECOND FLOOR REFLECTED CEILING PLAN
101	A – 5	NF PROCESS BUILDING ROOF PLAN
102	A – 6	NF PROCESS BUILDING EAST AND WEST ELEVATIONS
103	A – 7	NF PROCESS BUILDING NORTH AND SOUTH ELEVATIONS
104	A – 8	NF PROCESS BUILDING WALL SECTIONS
105	A – 9	NF PROCESS BUILDING WALL SECTIONS
106	A – 10	NF PROCESS BUILDING FINISH SCHEDULE
107	A – 11	NF PROCESS BUILDING TOILET FLOOR PLANS AND ELEVATIONS
108	A – 12	NF PROCESS BUILDING DOOR SCHEDULE
109	A – 13	NF PROCESS BUILDING INTERIOR ELEVATIONS AND CABINET DETAILS
110	A – 14	NF PROCESS BUILDING WALL PARTITIONS
111	A – 15	NF PROCESS BUILDING ROOF DETAILS
112	A – 16	NF PROCESS BUILDING STAIR DETAILS
113	A – 17	NF PROCESS BUILDING ENLARGED LABORATORY FLOOR PLAN AND ELEVATIONS
114	A – 18	EMERGENCY GENERATOR BUILDING FLOOR AND ROOF PLANS
115	A – 19	EMERGENCY GENERATOR BUILDING ELEVATIONS
116	A – 20	EMERGENCY GENERATOR BUILDING SECTIONS
117	A – 21	DEGASIFIERS STRUCTURE ELEVATIONS AND DETAILS
118	LS – 1	NF PROCESS BUILDING FIRST FLOOR LIFE SAFETY PLAN
119	LS – 2	NF PROCESS BUILDING FIRST FLOOR LIFE SAFETY PLAN
		ELECTRICAL
120	E – 1	ELECTRICAL LEGEND AND SYMBOLS
121	E – 2	GENERAL NOTES AND SPECIFICATIONS
122	E – 3	ELECTRICAL SITE PLAN
123	E – 4	PROCESS BUILDING FIRST FLOOR LIGHTING PLAN
124	E – 5	PROCESS BUILDING FIRST FLOOR POWER AND COMMUNICATIONS PLAN
125	E – 6	PROCESS BUILDING SECOND FLOOR LIGHTING, POWER AND COMMUNICATIONS PLAN
126	E – 7	PROCESS BUILDING EQUIPMENT AND GROUNDING PLAN
127	E – 8	GENERATOR BUILDING LIGHTING, POWER AND COMMUNICATIONS PLAN
128	E – 9	DEGASIFIERS STRUCTURE ELECTRICAL PLAN
129	E – 10	ENLARGED ELECTRICAL PLANS
130	E – 11	ENLARGED PLANS
131	E – 12	ONE–LINE DIAGRAM SHEET 1
132	E – 13	ONE–LINE DIAGRAM SHEET 2
133	E – 14	ONE–LINE DIAGRAM EXISTING PLANT
134	E – 15	EXISTING MCC1, MCC2 & ELECTRICAL SCHEMATICS
135	E – 16	ELECTRICAL SCHEMATICS SHEET 1
136	E – 17	ELECTRICAL SCHEMATICS SHEET 2
137	E – 18	ELECTRICAL SCHEMATICS SHEET 3
138	E – 19	INSTRUMENTATION AND CONTROL RISER DIAGRAMS SHEET 1
139	E – 20	INSTRUMENTATION AND CONTROL RISER DIAGRAMS SHEET 2
140	E – 21	INSTRUMENTATION AND CONTROL RISER DIAGRAMS SHEET 3
141	E – 22	INSTRUMENTATION AND CONTROL RISER DIAGRAMS SHEET 4
142	E – 23	POWER RISER DIAGRAMS SHEET 1
143	E – 24	POWER RISER DIAGRAMS SHEET 2
144	E – 25	MISC. RISER DIAGRAMS
145	E – 26	SCHEDULES SHEET 1
146	E – 27	SCHEDULES SHEET 2
147	E – 28	SCHEDULES SHEET 3
148	E – 29	SCHEDULES SHEET 4
149	E – 30	SCHEDULES SHEET 5
150	E – 31	CONTRACTOR'S TRAILER TEMPORARY POWER DETAILS
151	E – 32	ELECTRICAL DETAILS SHEET 1
152	E – 33	ELECTRICAL DETAILS SHEET 2
153	E – 34	ELECTRICAL DETAILS SHEET 3
154	E – 35	ELECTRICAL DETAILS SHEET 4
155	E – 36	ELECTRICAL DETAILS SHEET 5
		HVAC
156	V – 1	NF PROCESS BUILDING MECHANICAL NOTES AND LEGEND
157	V – 2	NF PROCESS BUILDING FIRST FLOOR VENTILATION PLAN
158	V – 3	NF PROCESS BUILDING SECOND FLOOR VENTILATION PLAN
159	V – 4	EMERGENCY GENERATOR BUILDING GENERATOR VENTILATION PLAN
160	V – 5	NF PROCESS BUILDING VENTILATION SCHEDULES
161	V – 6	NF PROCESS BUILDING VENTILATION DETAILS
162	V – 7	NF PROCESS BUILDING VENTILATION DETAILS
		PLUMBING
163	P – 1	NF PROCESS BUILDING PLUMBING NOTES, LEGEND, AND SPECIFICATIONS
164	P – 2	NF PROCESS BUILDING FIRST FLOOR SANITARY PLAN
165	P – 3	NF PROCESS BUILDING SECOND FLOOR SANITARY PLAN
166	P – 4	NF PROCESS BUILDING FIRST FLOOR DOMESTIC WATER PLAN
167	P – 5	NF PROCESS BUILDING SECOND FLOOR DOMESTIC WATER PLAN
168	P – 6	NF PROCESS BUILDING ROOF PLAN
169	P – 7	NF PROCESS BUILDING SANITARY ISOMETRIC DIAGRAM
170	P – 8	NF PROCESS BUILDING DOMESTIC WATER ISOMETRIC DIAGRAM
171	P – 9	NF PROCESS BUILDING STORM & CONDENSATE ISOMETRIC DIAGRAM

NO.	DATE	ISSUED FOR	BY
2	01/08	RECORD DRAWING	P.A.D.
1	04/04	BID SET	P.A.D.

DESIGNED D.M.L.
DRAWN W.D.R.
CHECKED J.M.W.
PROJ. ENGR. P.A.D.

PATRICK A. DAVIS P.E.
No. 37167

HAZEN AND SAWYER
Environmental Engineers & Scientists
4000 Hollywood Boulevard, Suite 750N
Hollywood, Florida 33021
Certificate of Authorization Number: 2771

SCALE NTS

CONTRACT: –
CLIENTS PROJECT:
ENGINEERS PROJECT: 40406
CAD REFERENCE: 40406G02

CITY OF HALLANDALE BEACH
UTILITIES DEPARTMENT

6 MGD MEMBRANE SOFTENING W.T.P.

INDEX OF DRAWINGS

DATE: JANUARY 2008
SHEET: 2 OF 162
DRAWING: G–2

RECORD DRAWING

PLOT DATE: 2/6/2008 4:51 PM BY: AMEDINA

XREFs:

File = O:\40406\40406–001\Drawings\GEN\40406G02 Saved by GDIAZ Save date = 2/1/2008 4:39 PM

SYMBOLS

- SOLENOID
- MOTOR OPERATED
- BALL VALVE
- BUTTERFLY VALVE/DAMPER
- CHECK VALVE
- GATE VALVE
- PLUG VALVE
- THREE WAY VALVE
- PRESSURE REDUCING/ RELIEF VALVE
- PRESSURE REGULATING VALVE
- VENTURI METER
- FLAME ARRESTER
- HOSE BIBB (PLAN)
- HOSE BIBB (ELEVATION)
- MECHANICAL COUPLING
- HARNESSED MECHANICAL COUPLING
- GROOVED COUPLING
- HARNESSED EXPANSION JOINT
- EXPANSION JOINT
- GAUGE
- UNION
- MAGNETIC METER
- FIRE HYDRANT
- MANHOLE
- SEALED MANHOLE
- PROPOSED PIPELINE/STRUCTURE
- EXISTING UTILITIES/STRUCTURE
- PROPOSED PIPELINE (DOUBLE LINE IF SCALE OF DRAWING PERMITS)
- WELDED JOINT
- FLANGED JOINT
- MECHANICAL JOINT
- PUSH-ON JOINT
- THREADED JOINT
- SOCKET WELDED JOINT
- PROPOSED STRUCTURE OR FACILITY
- REDUCER (SINGLE LINE)
- REDUCER (DOUBLE LINE)
- CONCRETE PIPE SUPPORT

ABBREVIATIONS

VALVES, FITTINGS, ETC.

ARV	AIR RELIEF VALVE
BV	BALL VALVE
BF	BLIND FLANGE
BFV	BUTTERFLY VALVE
CGV	CHLORINE GAS VALVE UNDER VACUUM
CV	CHECK VALVE
CPLG	COUPLING
ED	EQUIPMENT DRAIN
EXP JT	EXPANSION JOINT
FH	FIRE HYDRANT
FTG	FITTING
FLG	FLANGE
FD	FLOOR DRAIN
GV	GATE VALVE
HB	HOSE BIBB
LR	LONG RADIUS
MJ	MECHANICAL JOINT
MOV	MOTOR OPERATED VALVE
NPT	NATIONAL PIPE THREAD
PE	PLAIN END
PV	PLUG VALVE
PS	PUMP STATION
PRV	PRESSURE RELIEF VALVE
RD	ROOF DRAIN
SOV	SOLENOID OPERATED VALVE
THD	THREADED
VAC	VACUUM

PIPING

CU	COPPER OR CUBIC
DIP	DUCTILE IRON PIPE
FM	FORCE MAIN
GSP	GALVANIZED STEEL PIPE
IPS	IRON PIPE SIZE
PVC	POLYVINYLCHLORIDE
PCCP	PRECAST CONCRETE CYLINDER PIPE

GENERAL

A/C	AIR CONDITIONER
AL, ALUM	ALUMINUM
AB	ANCHOR BOLT
L	ANGLE
APPROX	APPROXIMATE
AFF	ABOVE FINISHED FLOOR
ARCH	ARCHITECTURAL
AS	ANTISCALANT
BD	BLOWDOWN
BLK	BLOCK
BOTT	BOTTOM
BP	BID PACKAGE
BLDG	BUILDING
BSP	BACTERIOLOGICAL SAMPLING POINT
BWD	BACKWASH DRAIN
CB	CATCH BASIN
CA	SODIUM HYDROXIDE (CAUSTIC)
CC	CENTER TO CENTER
CHK'D	CHECKERED
CL	CENTER LINE
CLG	CHLORINE GAS
CLS	CHLORINE SOLUTION
CO	CLEAN OUT
CN	CONCENTRATE WATER
CLGV	CHLORINE GAS – VACUUM
CLR	CLEAR
COL	COLUMN
CO	COMPANY
CONC	CONCRETE
CONST	CONSTRUCTION
CONT	CONTINUOUS
CONTR	CONTRACTOR
CSD	CLEANING SOLUTION DRAIN
CSR	CLEANING SOLUTION RETURN
CS	CHLORINE SOLUTION
CSS	CLEANING SOLUTION SUPPLY
CW	CONDITIONED WATER
D	DRAIN
DET	DETAIL
DIAG	DIAGONAL
DIA	DIAMETER
DIM	DIMENSION
DISCH	DISCHARGE
DWL	DOWEL
DN	DOWN
DWG	DRAWING
EA	EACH
EE	EACH END
EF	EACH FACE
EW	EACH WAY
ECC	ECCENTRIC
EFF	EFFLUENT
ELEC	ELECTRIC
EL, ELEV	ELEVATION
EQUIP	EQUIPMENT
EXH	EXHAUST
EXIST, EX	EXISTING
EXP	EXPANSION
EXT	EXTERIOR
FIN	FINISH
FE	FIRE EXTINGUISHER
FL	FLOOR
FF	FINISH FLOOR
FLG	FLANGED
FM	FORCE MAIN
FR	FUEL RETURN
FS	FUEL SUPPLY
FSS	FLUSHING SOLUTION SUPPLY
FTG	FOOTING
FW	FINISHED WATER
GALV	GALVANIZED
GC	GROOVED COUPLING
GC	GROOVED CAP
GD	GRAVITY DRAIN
GPM	GALLONS PER MINUTE
GR	GRADE
H	HIGH
HP	HIGH POINT
HWL	HIGH WATER LEVEL
HORIZ	HORIZONTAL
HWH	HOT WATER HEATER
INFL	INFLUENT
INJ	INJECTION
ID	INSIDE DIAMETER
IF	INSIDE FACE
INSUL	INSULATION
INT	INTERIOR
ISO	ISOLATION
INV	INVERT
JT	JOINT
LG	LONG
LN	LINE
LP	LOW POINT
LWL	LOW WATER LEVEL
MH	MANHOLE
MANUF	MANUFACTURER
MGD	MILLION GALLONS PER DAY
MO	MASONRY OPENING
MAX	MAXIMUM
MECH	MECHANICAL
MIN	MINIMUM
MJ	MECHANICAL JOINT
MOV	MOTOR OPERATED VALVE
NF	NANOFILTRATION
NPW	NON POTABLE WATER
NIC	NOT IN CONTRACT
NTS	NOT TO SCALE
NO	NUMBER
OC	ON CENTER
OPNG	OPENING
OD	OUTSIDE DIAMETER
OF	OUTSIDE FACE
OF	OVERFLOW
PCSR	PERMEATE CLEANING SOLUTION RETURN
PM	PERMEATE WATER
PW	POTABLE WATER
LBS/FT	POUNDS PER FOOT
P/L	PROPERTY LINE
RAD, R	RADIUS
RCP	REINFORCED CONCRETE PIPE
RECIR	RECIRCULATION
RED	REDUCING
REHAB	REHABILITATION
REINF	REINFORCING
REQ'D	REQUIRED
RJ	RESTRAINED JOINT
RO	REVERSE OSMOSIS
ROT	ROTATED
R/W, ROW	RIGHT OF WAY
RW	RAW WATER
S	SAMPLE
SAN	SANITARY
SA	SULFURIC ACID
SECT	SECTION
SEQ	SEQUESTRANT
SH	SODIUM HYPOCHLORITE
SHT	SHEET
SI	SCALE INHIBITOR
SL	SLUDGE
SOF	SOFTENED WATER
SPD	SUMP PUMP DISCHARGE
SPEC	SPECIFICATION
SQ	SQUARE
SS	SANITARY SEWER
SST	STAINLESS STEEL
STL	STEEL
STRUC	STRUCTURAL
SYMM	SYMMETRICAL
TBD	TO BE DETERMINED
TEMP	TEMPORARY
THK	THICK
TI	TEMPERATURE INDICATOR
TO	THROUGHOUT
TOC	TOP OF CONCRETE
TOS	TOP OF SLAB
TYP	TYPICAL
VTR	VENT THROUGH ROOF
VERT	VERTICAL
WTR	WATER
W/L	WATER LEVEL
WWF	WELDED WIRE FABRIC
W	WIDE
W/	WITH

SECTION AND DETAIL IDENTIFICATION

SECTION IDENTIFICATION

(1) SECTION CUT ON DRAWING G–1:

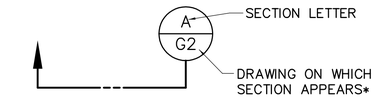

(2) ON DRAWING G–2 THIS SECTION IS IDENTIFIED AS:

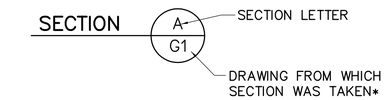

DETAIL IDENTIFICATION

(1) DETAIL CALL–OUT ON DRAWING G–1 AS:

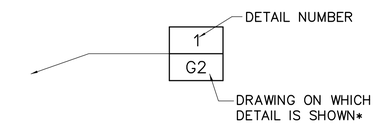

(2) ON DRAWING G–2 THIS DETAIL IDENTIFIED AS:

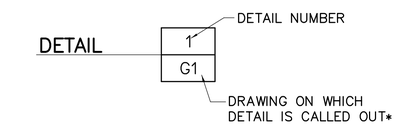

STANDARD DETAIL IDENTIFICATION

(1) DETAIL CALL–OUT ON PLAN OR SECTION:

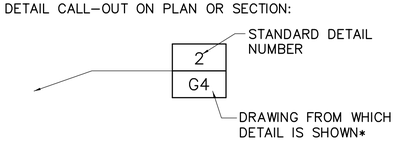

(2) ON DRAWING G–4 THIS DETAIL IDENTIFIED AS:

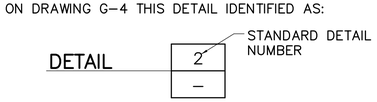

NOTE: IF PLAN AND SECTION (OR DETAIL CALL–OUT AND DETAIL) ARE SHOWN ON SAME DRAWING, DRAWING NUMBER IS REPLACE BY A LINE.

NOTES:

1. ELECTRICAL SYMBOLS SHOWN ON ELECTRICAL SHEETS.
2. FOR WELDING SYMBOLS USE AMERICAN WELDING SOCIETY STANDARD SYMBOLS. SEE AMERICAN INSTITUTE OF STEEL CONSTRUCTION MANUAL.

NO.	DATE	ISSUED FOR	BY
2	01/08	RECORD DRAWING	P.A.D.
1	10/03	BID SET	P.A.D.

DESIGNED M.D.L.
DRAWN W.D.R.
CHECKED P.A.D.
PROJ. ENGR. P.A.D.

PATRICK A. DAVIS P.E.
No. 37167

HAZEN AND SAWYER
Environmental Engineers & Scientists
4000 Hollywood Boulevard, Suite 750N
Hollywood, Florida 33021
Certificate of Authorization Number: 2771

SCALE NONE

CONTRACT: –
CLIENTS PROJECT:
ENGINEERS PROJECT: 40406
CAD REFERENCE: 40406G03

CITY OF HALLANDALE BEACH
UTILITIES DEPARTMENT

6 MGD MEMBRANE SOFTENING W.T.P.

ABBREVIATIONS, SYMBOLS, SECTION AND DETAIL IDENTIFICATION

DATE: JANUARY 2008
SHEET: 3 OF 162
DRAWING: G–3

RECORD DRAWING

PLOT DATE: 2/8/2008 4:51 PM BY: AMEDINA
XREFs:

File = O:\40406\40406-001\Drawings\GEN\40406G03 Saved by GDIAZ Save date = 1/30/2008 1:41 PM

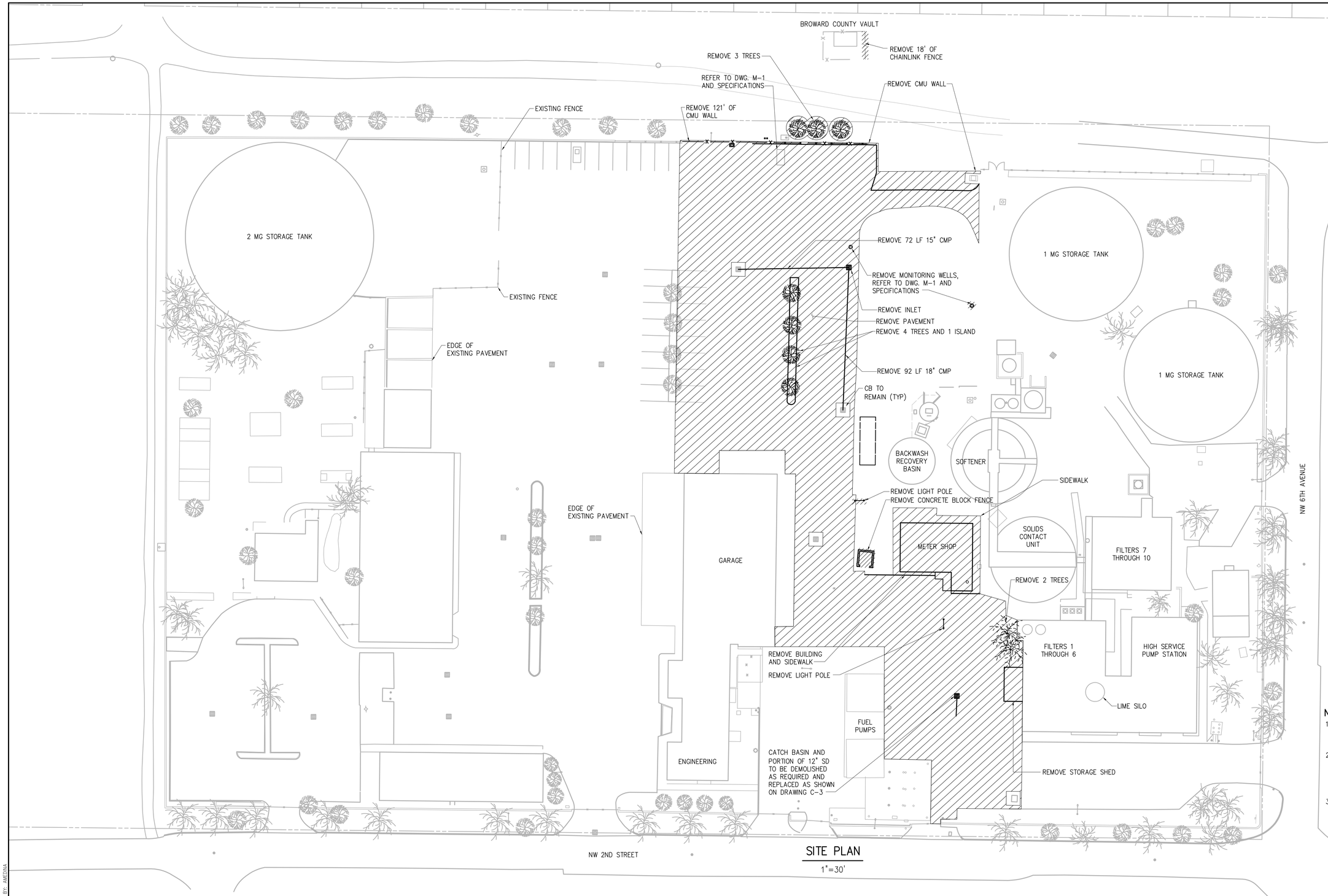

SITE PLAN

1"=30'

LEGEND

- EXISTING STRUCTURES
- ITEMS TO BE REMOVED

NOTES:

1. CONTRACTOR SHALL FIELD VERIFY EXISTING PIPING AND UTILITY LOCATION PRIOR TO INITIATING DEMOLITION ACTIVITIES.
2. CONTRACTOR SHALL SUBMIT A "STORMWATER NOTICE OF INTENT APPLICATION" 48 HOURS PRIOR TO COMMENCEMENT OF CONSTRUCTION TO THE FLORIDA DEPARTMENT OF ENVIRONMENTAL PROTECTION.
3. CONTRACTOR SHALL SUBMIT A "STORMWATER POLLUTION PREVENTION PLAN" TO THE BROWARD COUNTY WATER RESOURCES DIVISION SHOWING ALL BEST MANAGEMENT PRACTICES TO BE IMPLEMENTED DURING CONSTRUCTION.

1"=30'-0" 30 15 0 30'

NO.	DATE	ISSUED FOR	BY
2	01/08	RECORD DRAWING	P.A.D.
1	04/04	BID SET	P.A.D.

DESIGNED J.T.C.
DRAWN J.T.C.
CHECKED L.M.S.
PROJ. ENGR. P.A.D.

PATRICK A. DAVIS P.E.
No. 37167

HAZEN AND SAWYER
Environmental Engineers & Scientists
4000 Hollywood Boulevard, Suite 750N
Hollywood, Florida 33021
Certificate of Authorization Number: 2771

SCALE 1"=30'

CONTRACT: –
CLIENTS PROJECT:
ENGINEERS PROJECT: 40406
CAD REFERENCE: 40406C01

CITY OF HALLANDALE BEACH
UTILITIES DEPARTMENT

6 MGD MEMBRANE SOFTENING W.T.P.

SITE DEMOLITION PLAN

DATE: JANUARY 2008
SHEET: 4 OF 162
DRAWING: C-1

RECORD DRAWING

PLOT DATE: 2/8/2008 4:44 PM BY: AMEDINA

XREFs= ..\001\SP-ST,..\001\Potable 2

File = O:\40406\40406-001\Drawings\CIVIL\40406C01 Saved by GDIAZ Save date = 2/1/2008 11:46 AM

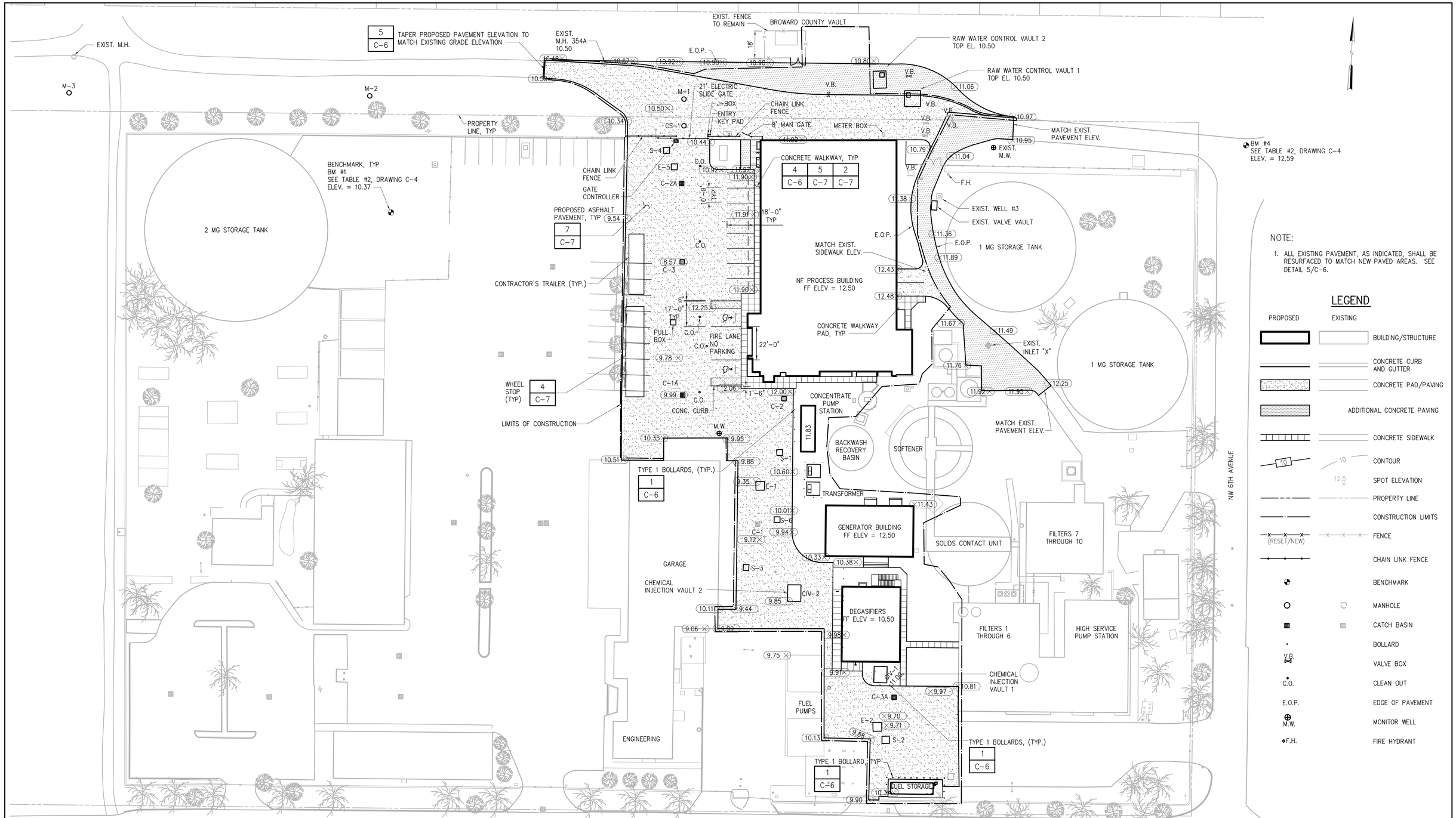

SITE PLAN

1"=30'

NO.	DATE	ISSUED FOR	BY
2	01/08	RECORD DRAWING	P.A.D.
2	07/14/05	CONSTRUCTION MODIFICATIONS	P.D.F.
1	04/04	BID SET	P.A.D.

DESIGNED J.T.C.
DRAWN J.T.C.
CHECKED L.M.S.
PROJ. ENGR. P.A.D.

PATRICK A. DAVIS P.E.
No. 37167

HAZEN AND SAWYER
Environmental Engineers & Scientists
4000 Hollywood Boulevard, Suite 750N
Hollywood, Florida 33021
Certificate of Authorization Number: 2771

SCALE 1"=30'

CONTRACT: –
CLIENTS PROJECT:
ENGINEERS PROJECT: 40406
CAD REFERENCE: 40406C04

CITY OF HALLANDALE BEACH
UTILITIES DEPARTMENT

6 MGD MEMBRANE SOFTENING W.T.P.

SITE PLAN

DATE: JANUARY 2008
SHEET: 5 OF 162
DRAWING: C-2

RECORD DRAWING

PLOT DATE: 2/6/2008 4:44 PM BY: AMEDINA

XREFs= ..\001\SP-ST,..\001\Potable 2

File = O:\40406\40406-001\Drawings\CIVIL\40406C02 Saved by GDIAZ Save date = 2/4/2008 11:43 AM

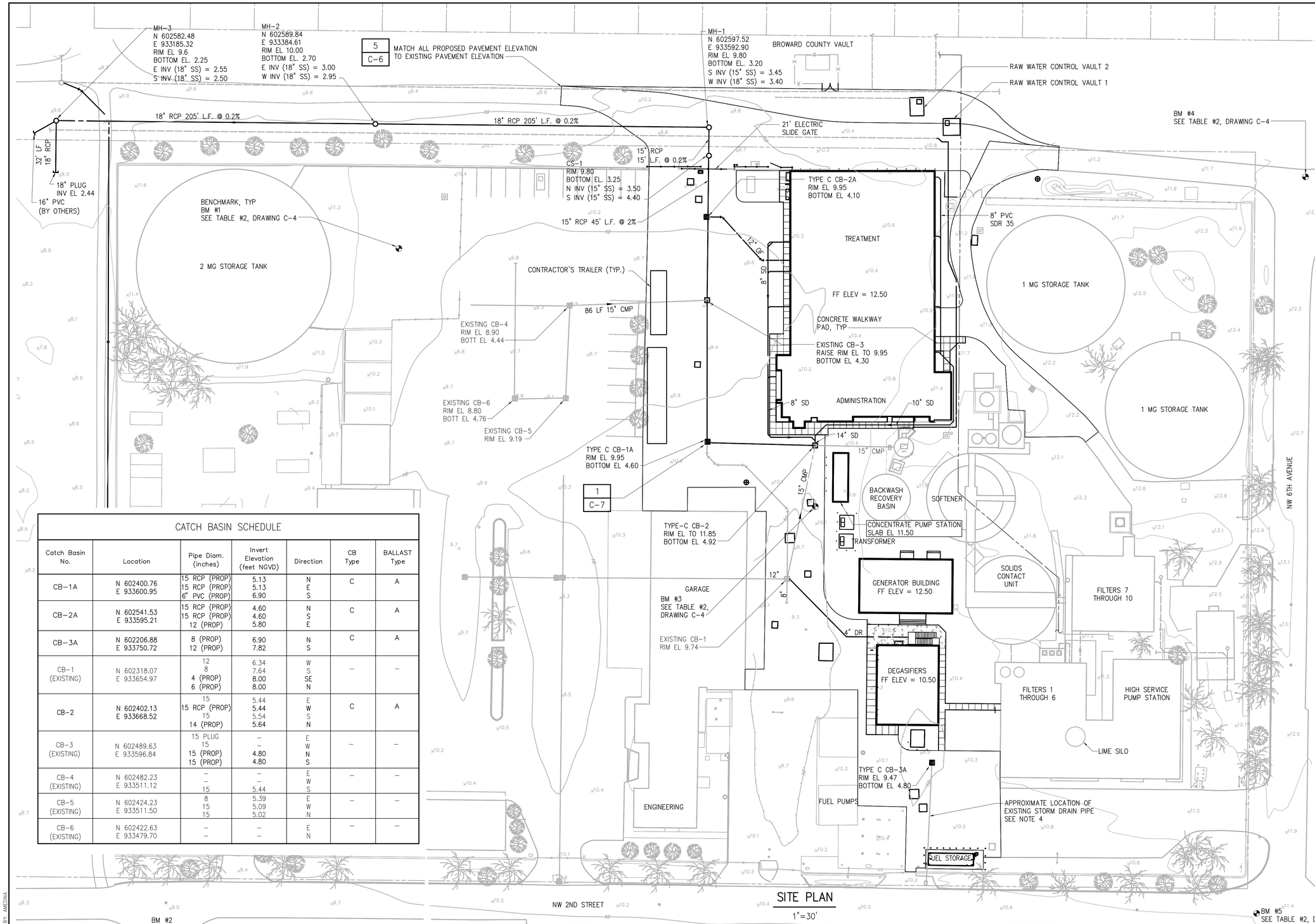

SITE PLAN

1"=30'

NOTES:

1. FOR EXISTING INLETS 1-3, INSTALL INLET EROSION CONTROL PROTECTION AS SHOWN ON DETAIL 8/C-7.
2. BAFFLES IN MODIFIED EXISTING INLETS SHALL BE REMOVED.
3. PROPOSED INLET SHALL REPLACE EXISTING INLET INDICATED. AFTER REMOVAL OF EXISTING INLET (SEE DRAWING C-1), CONTRACTOR SHALL REMOVE EXISTING PIPE AS NECESSARY AND CONSTRUCT NEW INLET AT LOCATION SHOWN. BOTTOM ELEVATION SHOWN IS ESTIMATED AND SHALL BE ADJUSTED UP OR DOWN AS NECESSARY TO ACCOMODATE EXISTING PIPE.
4. CONTRACTOR SHALL FIELD VERIFY LOCATION OF EXISTING PIPE(S) ASSOCIATED WITH THE REMOVED INLET AND SHALL MOVE AND ADJUST PIPING AS NECESSARY TO INSURE THAT ALL EXISTING PIPES TIE IN TO THE PROPOSED INLET.
5. MODIFIED EXISTING STORMWATER INLETS CONTAINING SEDIMENT SHALL BE CLEANED OUT TO THE FULLEST EXTENT POSSIBLE BEFORE BEING PUT BACK INTO SERVICE.
6. FOR NEW PAVEMENT AND RESURFACED PAVEMENT SEE DRAWING C-2.
7. SIDEWALK ELEVATION IMMEDIATELY ADJACENT STRUCTURES SHALL BE 0.5" BELOW FLOOR SLAB ELEVATION. SIDEWALKS SHALL BE CONSTRUCTED TO ENSURE POSITIVE DRAINAGE AWAY FROM ADJACENT STRUCTURES.
8. ALL CATCH BASIN GRATES SHALL BE AASHTO HS-20 TRAFFIC RATED.

CATCH BASIN SCHEDULE

Catch Basin No.	Location	Pipe Diam. (inches)	Invert Elevation (feet NGVD)	Direction	CB Type	BALLAST Type
CB-1A	N 602400.76 E 933600.95	15 RCP (PROP) 15 RCP (PROP) 6" PVC (PROP)	5.13 5.13 6.90	N E S	C	A
CB-2A	N 602541.53 E 933595.21	15 RCP (PROP) 15 RCP (PROP) 12 (PROP)	4.60 4.60 5.80	N S E	C	A
CB-3A	N 602206.88 E 933750.72	8 (PROP) 12 (PROP)	6.90 7.82	N S	C	A
CB-1 (EXISTING)	N 602318.07 E 933654.97	12 8 4 (PROP) 6 (PROP)	6.34 7.64 8.00 8.00	W S SE N	–	–
CB-2	N 602402.13 E 933668.52	15 15 RCP (PROP) 15 14 (PROP)	5.44 5.44 5.54 5.64	E W S N	C	A
CB-3 (EXISTING)	N 602489.63 E 933596.84	15 PLUG 15 15 (PROP) 15 (PROP)	– – 4.80 4.80	E W N S	–	–
CB-4 (EXISTING)	N 602482.23 E 933511.12	– – 15	– – 5.44	E W S	–	–
CB-5 (EXISTING)	N 602424.23 E 933511.50	8 15 15	5.39 5.09 5.02	E W N	–	–
CB-6 (EXISTING)	N 602422.63 E 933479.70	– –	– –	E N	–	–

LEGEND

PROPOSED	EXISTING	
		BUILDING/STRUCTURE
		GRAVEL ROAD
		CONCRETE PAD/PAVING
		CONCRETE SIDEWALK
10	10	CONTOUR
×11.90	12.5 ×	SPOT ELEVATION
		PROPERTY LINE
		CONSTRUCTION LIMITS
(RESET/NEW)		FENCE
		CHAIN LINK FENCE
		BENCHMARK
		EXFILTRATION TRENCH
		MANHOLE
		CATCH BASIN
		STORM DRAIN LINE

NO.	DATE	ISSUED FOR	BY
4	01/08	RECORD DRAWING	P.A.D.
3	07/14/05	CONSTRUCTION MODIFICATIONS	P.D.F.
2	06/04	ADDENDUM No. 1	P.A.D.
1	04/04	BID SET	P.A.D.

DESIGNED J.T.C.
DRAWN J.T.C.
CHECKED L.M.S.
PROJ. ENGR. P.A.D.

PATRICK A. DAVIS P.E.
No. 37167

HAZEN AND SAWYER
Environmental Engineers & Scientists
4000 Hollywood Boulevard, Suite 750N
Hollywood, Florida 33021
Certificate of Authorization Number: 2771

SCALE 1"=30'

CONTRACT: –
CLIENTS PROJECT:
ENGINEERS PROJECT: 40406
CAD REFERENCE: 40406C04

CITY OF HALLANDALE BEACH
UTILITIES DEPARTMENT

6 MGD MEMBRANE SOFTENING W.T.P.

DRAINAGE AND GRADING PLAN

DATE: JANUARY 2008
SHEET: 6 OF 162
DRAWING: C-3

RECORD DRAWING

BY: AMEDINA
REV DATE: 2/6/2008 4:45 PM

XREFs= ..\001\SP-ST,..\001\SPOTS,..\001\benchmarks,O:\40406\40406-001\Drawings\001\SP-ST-RALIGH,..\001\Potable 2

File = O:\40406\40406-001\Drawings\CIVIL\40406C03 Saved by JKOHLER Save date = 2/4/2008 11:43 AM

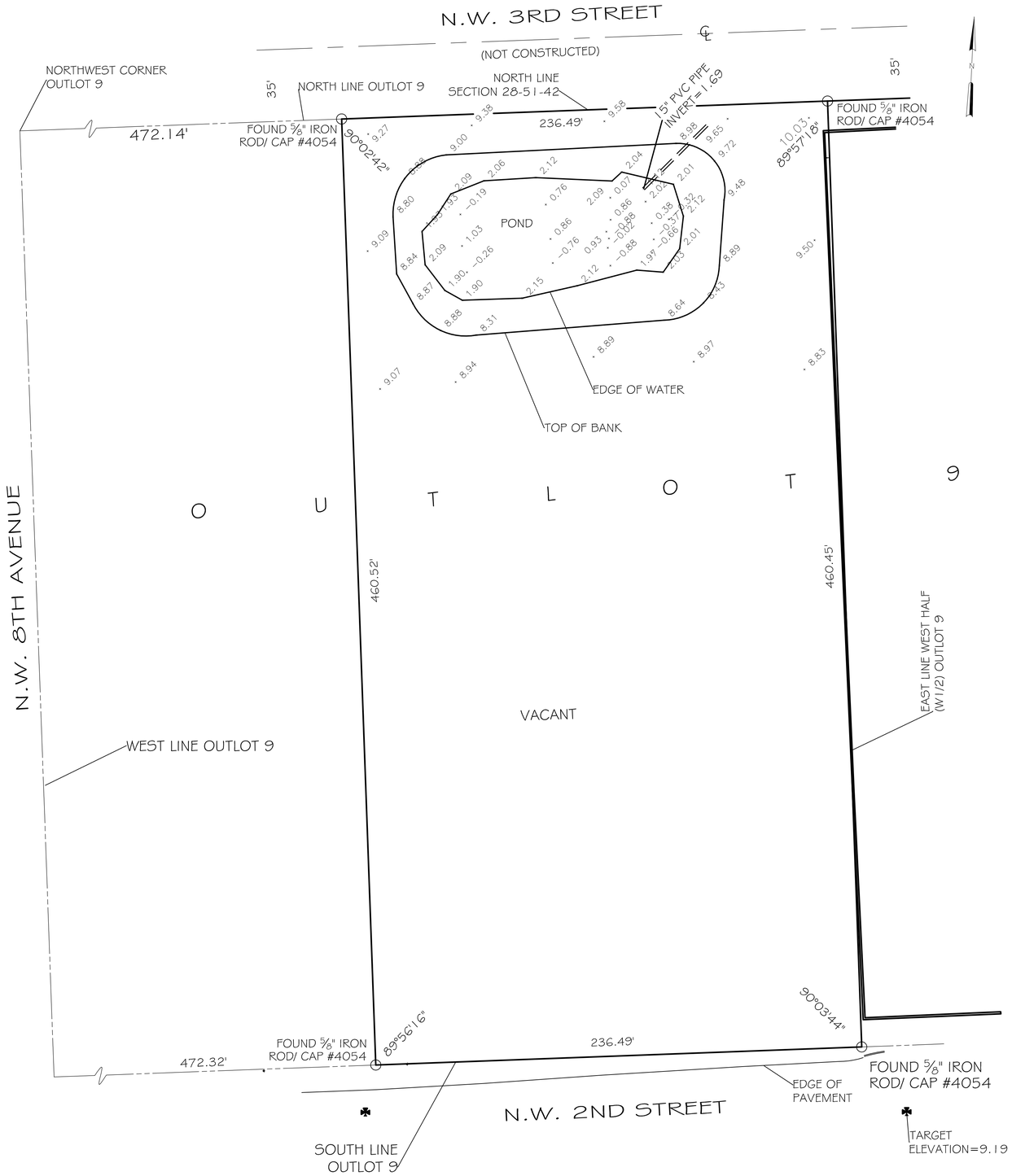

DESCRIPTION: THE EAST 236.49 FEET OF THE WEST HALF (W1/2) OF OUTLOT 9, "TOWN OF HALLANDALE", ACCORDING TO PLAT THEREOF AS RECORDED IN PLAT BOOK 'B', PAGE 13, OF THE PUBLIC RECORDS OF DADE COUNTY, FLORIDA. SAID LANDS SITUATE IN THE CITY OF HALLANDALE, BROWARD COUNTY, FLORIDA AND CONTAIN 2.50 ACRES.

FEMA FLOOD INSURANCE RATE MAP							COMMUNITY NO.
CITY OF HALLANDALE BEACH BROWARD COUNTY, FLORIDA							N/A
PANEL NO.	SUFFIX	ZONE	FIRM DATE	BASE ELEV.	LOWEST FLR. ELEV	AVG. GRD.	
N/A	N/A	N/A	N/A	N/A	N/A	N/A	

NOTES
1) THE LAND DESCRIPTION SHOWN HEREON WAS PROVIDED BY THE CLIENT. EASEMENTS AND RIGHTS-OF-WAY PER RECORD PLAT HAVE BEEN SHOWN HEREON. NO FURTHER SEARCH FOR MATTERS OF RECORD HAS BEEN MADE BY THIS FIRM.
2) THIS SURVEY IS PREPARED FOR THE SOLE AND EXCLUSIVE USE OF THE PARTIES AS SURVEYED FOR AND AS CERTIFIED TO AND SHALL NOT BE RELIED UPON BY ANY OTHER ENTITY OR INDIVIDUAL.
3) ELEVATIONS SHOWN HEREON ARE BASED ON NATIONAL GEODETIC VERTICAL DATUM OF 1929.
4) NORTH ARROW RELATIVE TO ASSUMED EAST ALONG THE CENTERLINE OF N.W. 2ND STREET.

NOTE:
THE INFORMATION SHOWN HEREIN IS FROM THE SKETCH OF SPECIFIC PURPOSE SURVEY AS PREPARED BY GIBBS LAND SURVEYORS FOR THE CITY OF HALLANDALE BEACH (GIBBS JOB #RN4607).

1"=30'-0" 30 15 0 30'

NO.	DATE	ISSUED FOR	BY
1	01/08	RECORD DRAWING	P.A.D.

DESIGNED J.T.C.
DRAWN J.T.C.
CHECKED L.M.S.
PROJ. ENGR. P.A.D.

PATRICK A. DAVIS P.E.
No. 37167

HAZEN AND SAWYER
Environmental Engineers & Scientists
4000 Hollywood Boulevard, Suite 750N
Hollywood, Florida 33021
Certificate of Authorization Number: 2771

SCALE 1"=30'

CONTRACT: –
CLIENTS PROJECT:
ENGINEERS PROJECT: 40406
CAD REFERENCE: 40406C05

CITY OF HALLANDALE BEACH
UTILITIES DEPARTMENT

6 MGD MEMBRANE SOFTENING W.T.P.

ON-SITE STORMWATER RETENTION POND

DATE: JANUARY 2008
SHEET: – OF 162
DRAWING: C-3A

RECORD DRAWING

PLOT DATE: 2/8/2008 4:45 PM BY: AMEDINA

XREFs=

File = O:\40406\40406-001\Drawings\CIVIL\40406C03A Saved by GDIAZ Save date = 1/30/2008 1:48 PM

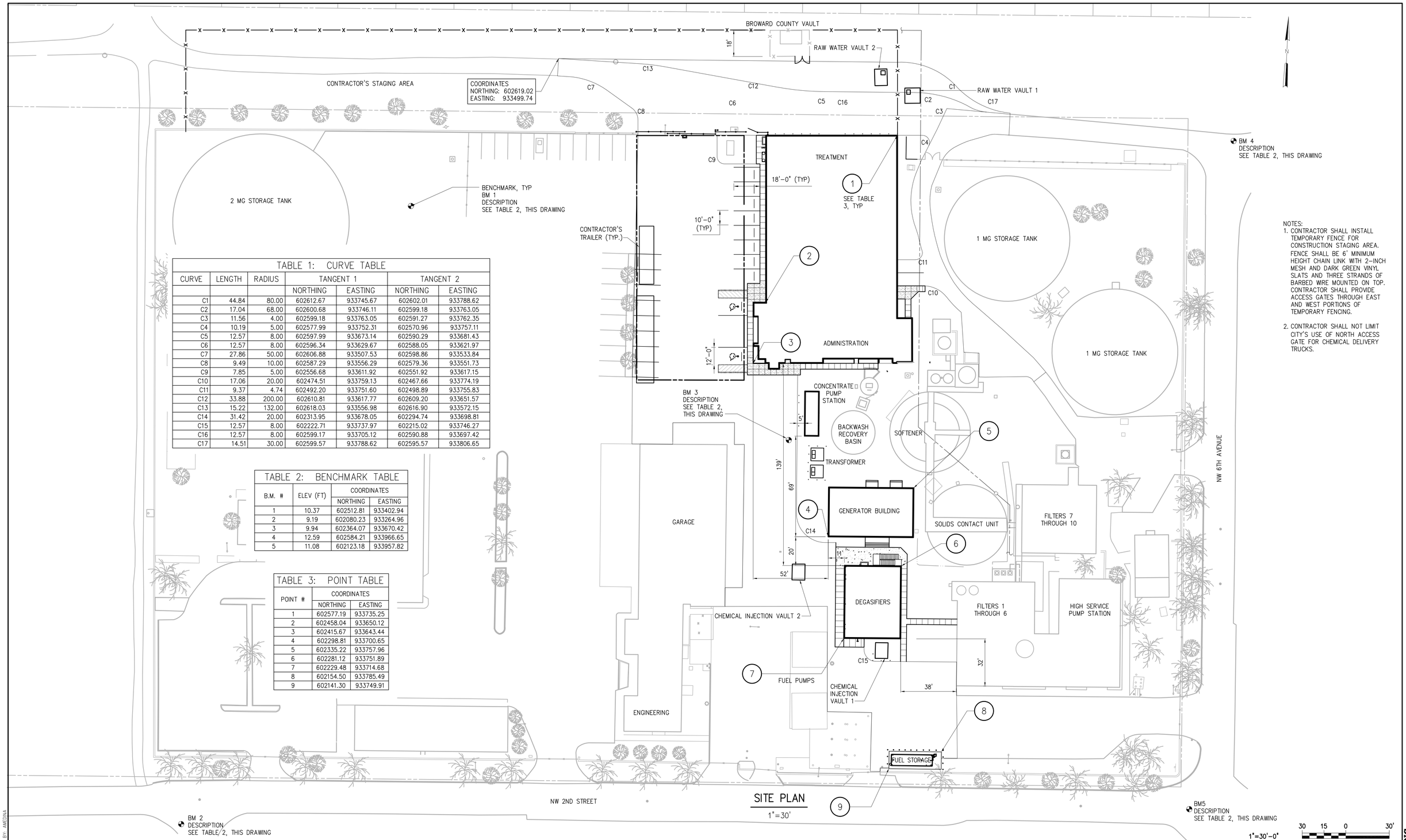

NOTES:
1. CONTRACTOR SHALL INSTALL TEMPORARY FENCE FOR CONSTRUCTION STAGING AREA. FENCE SHALL BE 6' MINIMUM HEIGHT CHAIN LINK WITH 2-INCH MESH AND DARK GREEN VINYL SLATS AND THREE STRANDS OF BARBED WIRE MOUNTED ON TOP. CONTRACTOR SHALL PROVIDE ACCESS GATES THROUGH EAST AND WEST PORTIONS OF TEMPORARY FENCING.
2. CONTRACTOR SHALL NOT LIMIT CITY'S USE OF NORTH ACCESS GATE FOR CHEMICAL DELIVERY TRUCKS.

TABLE 1: CURVE TABLE

CURVE	LENGTH	RADIUS	TANGENT 1		TANGENT 2	
			NORTHING	EASTING	NORTHING	EASTING
C1	44.84	80.00	602612.67	933745.67	602602.01	933788.62
C2	17.04	68.00	602600.68	933746.11	602599.18	933763.05
C3	11.56	4.00	602599.18	933763.05	602591.27	933762.35
C4	10.19	5.00	602577.99	933752.31	602570.96	933757.11
C5	12.57	8.00	602597.99	933673.14	602590.29	933681.43
C6	12.57	8.00	602596.34	933629.67	602588.05	933621.97
C7	27.86	50.00	602606.88	933507.53	602598.86	933533.84
C8	9.49	10.00	602587.29	933556.29	602579.36	933551.73
C9	7.85	5.00	602556.68	933611.92	602551.92	933617.15
C10	17.06	20.00	602474.51	933759.13	602467.66	933774.19
C11	9.37	4.74	602492.20	933751.60	602498.89	933755.83
C12	33.88	200.00	602610.81	933617.77	602609.20	933651.57
C13	15.22	132.00	602618.03	933556.98	602616.90	933572.15
C14	31.42	20.00	602313.95	933678.05	602294.74	933698.81
C15	12.57	8.00	602222.71	933737.97	602215.02	933746.27
C16	12.57	8.00	602599.17	933705.12	602590.88	933697.42
C17	14.51	30.00	602599.57	933788.62	602595.57	933806.65

TABLE 2: BENCHMARK TABLE

B.M. #	ELEV (FT)	COORDINATES	
		NORTHING	EASTING
1	10.37	602512.81	933402.94
2	9.19	602080.23	933264.96
3	9.94	602364.07	933670.42
4	12.59	602584.21	933966.65
5	11.08	602123.18	933957.82

TABLE 3: POINT TABLE

POINT #	COORDINATES	
	NORTHING	EASTING
1	602577.19	933735.25
2	602458.04	933650.12
3	602415.67	933643.44
4	602298.81	933700.65
5	602335.22	933757.96
6	602281.12	933751.89
7	602229.48	933714.68
8	602154.50	933785.49
9	602141.30	933749.91

SITE PLAN
1"=30'

NO.	DATE	ISSUED FOR	BY
3	01/08	RECORD DRAWING	P.A.D.
2	07/14/05	CONSTRUCTION MODIFICATIONS	P.D.F.
1	04/04	BID SET	P.A.D.

DESIGNED J.T.C.
DRAWN J.T.C.
CHECKED L.M.S.
PROJ. ENGR. P.A.D.

PATRICK A. DAVIS P.E.
No. 37167

HAZEN AND SAWYER
Environmental Engineers & Scientists
4000 Hollywood Boulevard, Suite 750N
Hollywood, Florida 33021
Certificate of Authorization Number: 2771

SCALE 1"=30'

CONTRACT: –
CLIENTS PROJECT:
ENGINEERS PROJECT: 40406
CAD REFERENCE: 40406C05

CITY OF HALLANDALE BEACH
UTILITIES DEPARTMENT

6 MGD MEMBRANE SOFTENING W.T.P.

STAKING PLAN

DATE: JANUARY 2008
SHEET: 7 OF 162
DRAWING: C-4

RECORD DRAWING

PLOT DATE: 2/8/2008 4:45 PM BY: AMEDINA

XREFs= ..\001\SP-ST,..\001\benchmarks,..\001\Potable 2

File = O:\40406\40406-001\Drawings\CIVIL\40406C04 Saved by GDIAZ Save date = 2/4/2008 11:46 AM

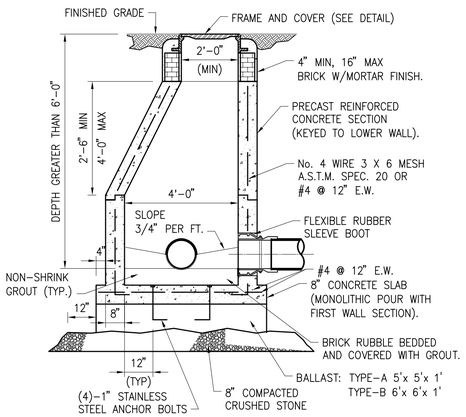

NOTES:

1. PRECAST MANHOLE SHALL CONFORM TO ASTM C478 WITH TYPE II 4000 P.S.I. CONCRETE.
2. "RAMNEK" OR EQUAL AT ALL RISER JOINTS (1/2" THICK WITH WIDTH AT LEAST 1/2 THE WALL THICKNESS) WITH 1/2" THICH GROUT ON INSIDE AND OUTSIDE.
3. ALL OPENINGS INCLUDING LIFTING HOLES SHALL BE SEALED WITH A WATERPROOF NON-SHRINKING GROUT AND CLAY BRICK.
4. FLOW CHANNELS SHALL BE CONSTRUCTED TO DIRECT INFLUENT INTO FLOW STREAM. (SEE DETAIL)
5. ALL PIPE HOLES SHALL BE PRECAST OR CORE-DRILLED.
6. INSIDE DROPS SHALL NOT BE DESIGNED TO EXCEED 1.80 FEET AND NOT CONSTRUCTED TO EXCEED 2.0 FEET.
7. BALLAST CONCRETE: MINIMUM CROSS SECTIONAL AREA OF REINFORCING STEEL SHALL BE 0.20%
8. ALL MANHOLES SHALL BE CONSTRUCTED SUCH THAT NO JOINTS ARE BELOW THE WATERTABLE (EL.=3.0' NGVD)

STANDARD MANHOLE

NTS

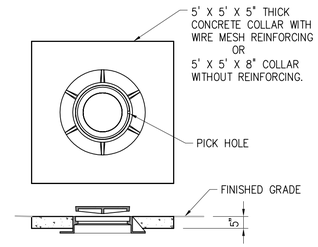

NOTES:

1. COLLAR IS REQUIRED ONLY WHEN MANHOLE IS OUT OF PAVEMENT.
2. MINIMUM WEIGHTS: COVER – 160 LBS., FRAME – 250 LBS.
3. GRAVITY DRAIN FRAMES AND COVER SHALL BE U.S. FOUNDRY NO. 420-C-BWT, WITH FOUR STAINLESS STEEL BOLTS, OR APPROVED EQUAL. UNLESS NOTED OTHERWISE.
4. COVER LABEL SHALL INDICATE NAME AND FUNCTION OF MANHOLE. CONTRACTOR SHALL COODINATE SPECIFIC LABEL WITH ENGINEER.

MANHOLE FRAME AND COVER

NTS

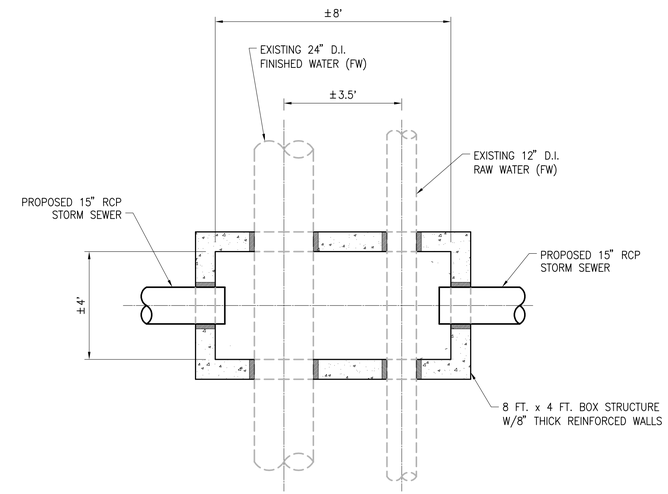

PLAN

NTS

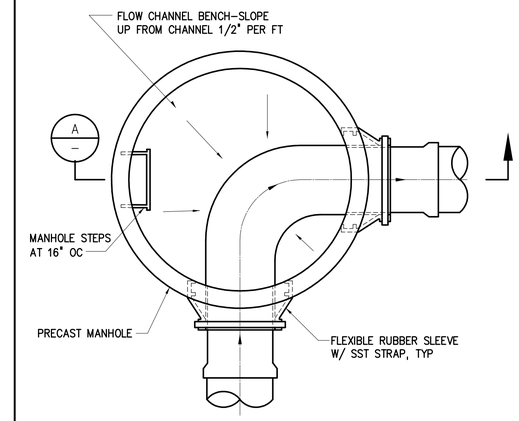

PLAN

NTS

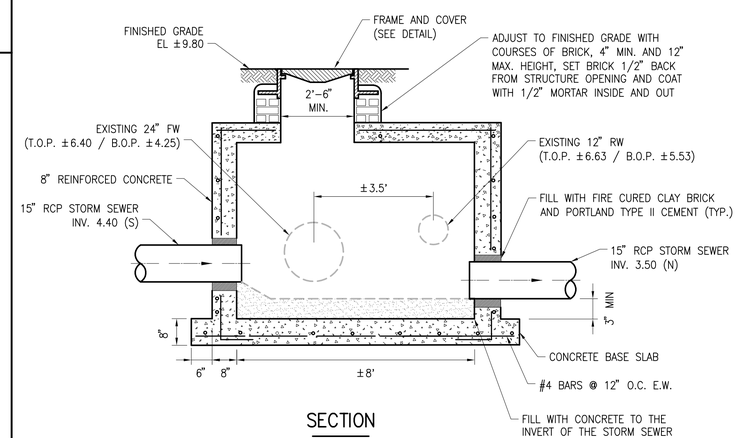

SECTION

NTS

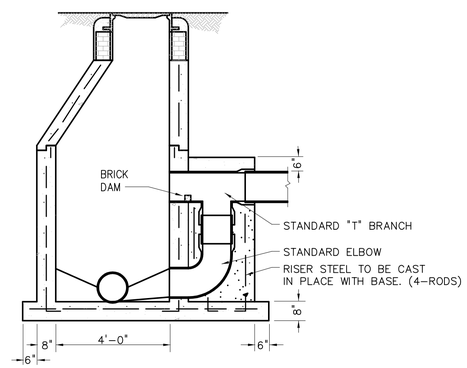

SECTION

NTS

NOTES:

1. ALL DETAILS AND SPECIFICATIONS FOR STANDARD MANHOLES ARE APPLICABLE EXCEPT FOR REFERENCES TO DROP ASSEMBLY.
2. THE PRECAST BASE SHALL EXTEND FULLY UNDER THE DROP ASSEMBLY.
3. MASONRY CONSTRUCTION ABOVE THE EXTENDED PRECAST BASE, IF FILLED WITH CONCRETE, IS PERMISSABLE.
4. BRICK AND CONCRETE RUBBLE ARE PERMITTED AS FILLER IN DROP ENCASEMENT.
5. DROP CONNECTIONS SHALL BE REQUIRED WHENEVER AN INFLUENT INVERT IS LOCATED 2.0 FEET OR MORE ABOVE THE MAIN INVERT CHANNEL. DROP CONNECTIONS SHOULD NOT BE DESIGNED FOR LESS THAN A 2.4 FOOT DROP.
6. SOLVENT TYPE JOINT PVC FITTINGS MAY BE UTILIZED IN THE DROP ASSEMBLY ONLY.

DROP CONNECTION PRECAST MANHOLE

NTS

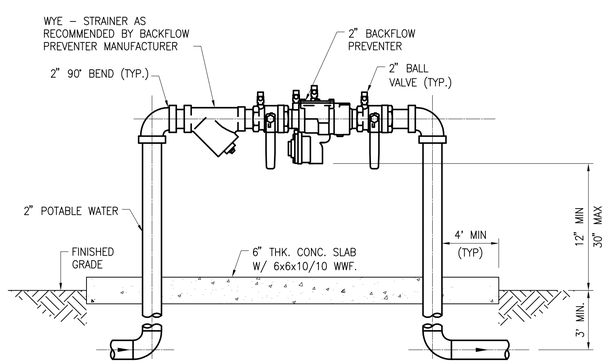

BACKFLOW PREVENTER DETAIL

NTS

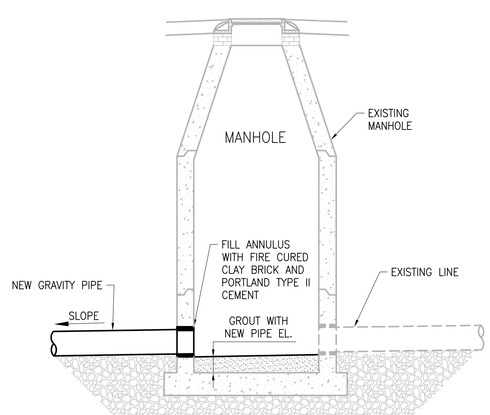

NEW SEWER LINE

INTO AN EXISTING GRAVITY SEWER MANHOLE

NTS

NOTES:

1. PROVIDE 6" THICKNESS OF 3/4" ROCK UNDER THE ENTIRE BASE. EXTEND BEDDING GRAVEL A MINIMUM OF 10 FEET BEYOND THE PERIMETER OF THE BASE AND UP TO THE BOTTOM OF THE PIPES ENTERING AND EXITING THE STRUCTURE.

2. WRAP THE 24" AND 12" DUCTILE IRON PIPES WITH BITUMINOUS FELT PAPER THROUGH THE LIMITS OF THE CONFLICT STRUCTURE AND FOR A DISTANCE OF TWO FEET (2') BEYOND EACH OPENING.

DRAINAGE CONFLICT STRUCTURE

NTS

NO.	DATE	ISSUED FOR	BY
3	01/08	RECORD DRAWING	P.A.D.
2	06/04	ADDENDUM No. 1	P.A.D.
1	10/03	BID SET	P.A.D.

XREFs=

DESIGNED H&S
DRAWN J.T.C.
CHECKED L.M.S.
PROJ. ENGR. P.A.D.

PATRICK A. DAVIS P.E.
No. 37167

HAZEN AND SAWYER
Environmental Engineers & Scientists
4000 Hollywood Boulevard, Suite 750N
Hollywood, Florida 33021
Certificate of Authorization Number: 2771

SCALE N.T.S.

CONTRACT: –
CLIENTS PROJECT:
ENGINEERS PROJECT: 40406
CAD REFERENCE: 40406C05

CITY OF HALLANDALE BEACH
UTILITIES DEPARTMENT

6 MGD MEMBRANE SOFTENING W.T.P.

MISCELLANEOUS CIVIL DETAILS

SHEET 1

DATE: JANUARY 2008
SHEET: 8 OF 162
DRAWING: C-5

RECORD DRAWING

PLOT DATE: 2/8/2008 4:45 PM BY: AMEDINA

File = O:\40406\40406-001\Drawings\CIVIL\40406C05 Saved by GDIAZ Save date = 1/30/2008 1:51 PM

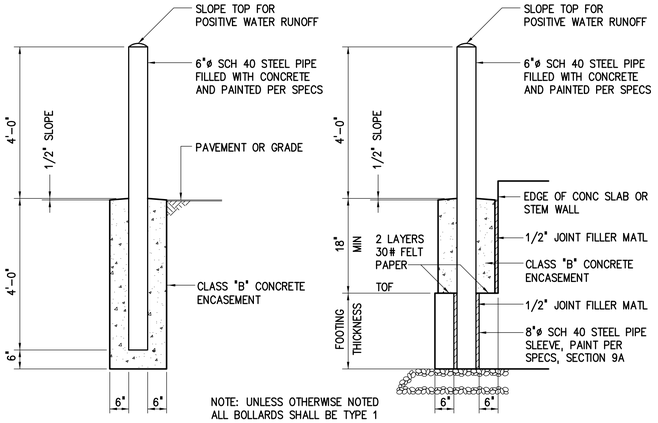

NOTE: UNLESS OTHERWISE NOTED ALL BOLLARDS SHALL BE TYPE 1

BOLLARD TYPE 1 BOLLARD TYPE 2

BOLLARD DETAIL

DETAIL 1 / C-2 NTS

A CORPORATION STOP SHALL BE INSTALLED WITH A LENGTH OF COPPER TUBING EXTENDING ABOVE THE GROUND. THE TUBING SHALL BE INSTALLED WITH A 180° BEND.

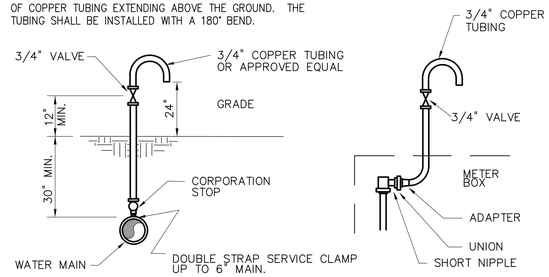

NOTE

SAMPLING POINTS SHALL BE LOCATED AND LATER REMOVED AS REQUIRED BY BROWARD COUNTY HEALTH DEPARTMENT.

BACTERIOLOGICAL SAMPLING POINT

DETAIL 3 / – NTS

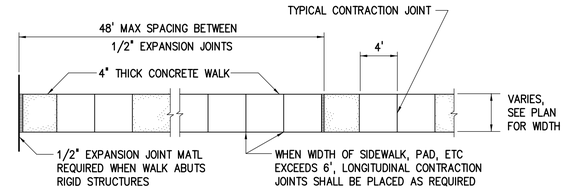

TYPICAL CONCRETE WALKWAY DETAIL

DETAIL 4 / C-2 NTS

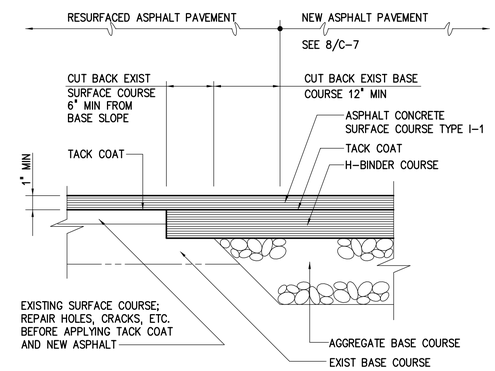

TYPICAL PAVEMENT JUNCTION WITH RESURFACING OF EXISTING PAVEMENT DETAIL

DETAIL 5 / C-2 NTS

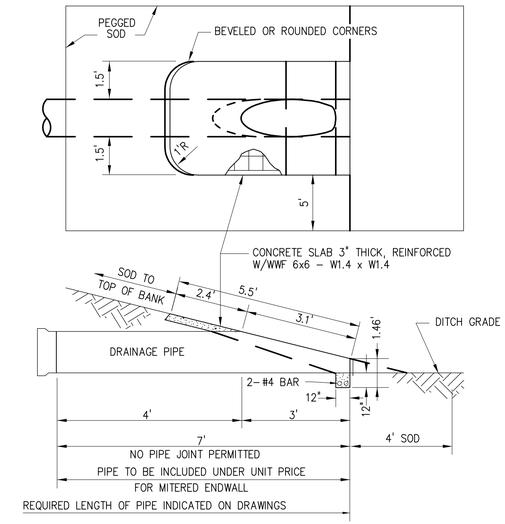

MITERED ENDWALL DETAIL

DETAIL 6 / – NTS

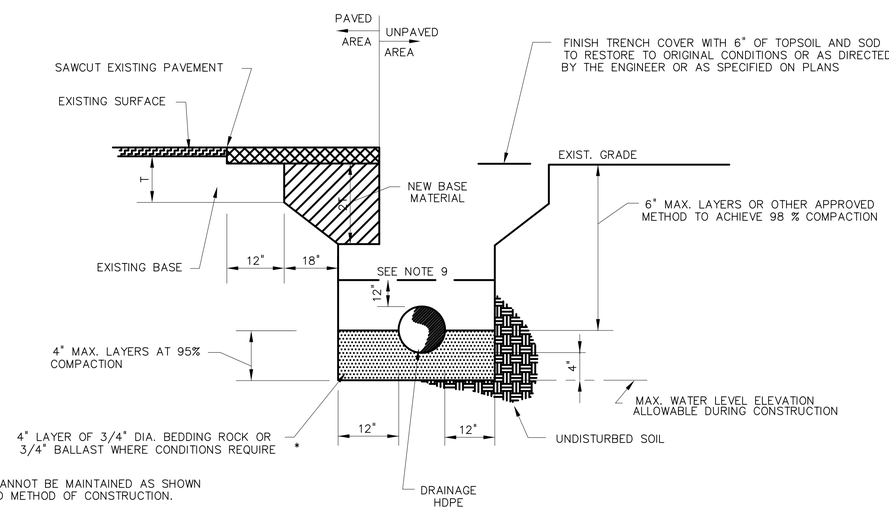

* OVER EXCAVATE <UP TO 24"> TO REMOVE SILT OR UNSUITABLE MATERIAL.

NOTES:

1. WHERE SOIL CONDITIONS CANNOT BE MAINTAINED AS SHOWN ABOVE, PROVIDE APPROVED METHOD OF CONSTRUCTION.
2. SHEETING WILL BE REQUIRED AS DETERMINED IN THE FIELD.
3. REPLACED BASE MATERIAL OVER DITCH SHALL BE TWICE THE THICKNESS OF THE ORIGINAL BASE, MIN. 8", MAX. 18".
4. BASE MATERIAL SHALL BE PLACED IN 6" MAX. <LOOSE MEASUREMENTS> LAYERS AND EACH LAYER THOROUGHLY ROLLED OR TAMPED TO A MINIMUM OF 98% OF MAX. DRY DENSITY, AS DETERMINED BY AASHTO T-180.
5. BASE MATERIAL SHALL HAVE A MINIMUM LBR OF 100 AND A MINIMUM CARBONATE OF 70%.
6. SUBGRADE MATERIAL UNDER PAVED AREAS SHALL BE PLACED IN 6" MAX. <LOOSE MEASUREMENTS> LAYERS AND EACH LAYER THOROUGHLY ROLLED OR TAMPED TO A MINIMUM 100% OF MAX. DENSITY AS DETERMINED BY AASHTO T-99.
7. ASPHALT CONCRETE PAVEMENT JOINTS SHALL BE MECHANICALLY SAWED.
8. SURFACE MATERIAL SHALL BE CONSISTENT WITH THE SURROUNDING SURFACE MATERIAL.
9. MECHANICAL COMPACTION NOT ALLOWED BELOW THIS LEVEL <SEE DETAIL>.
10. COMPACTION PERCENTAGES SHOWN REFER TO AASHTO T-180.

TRENCH DETAIL AND ROADWAY RESTORATION

DETAIL 2 / M-2 NTS

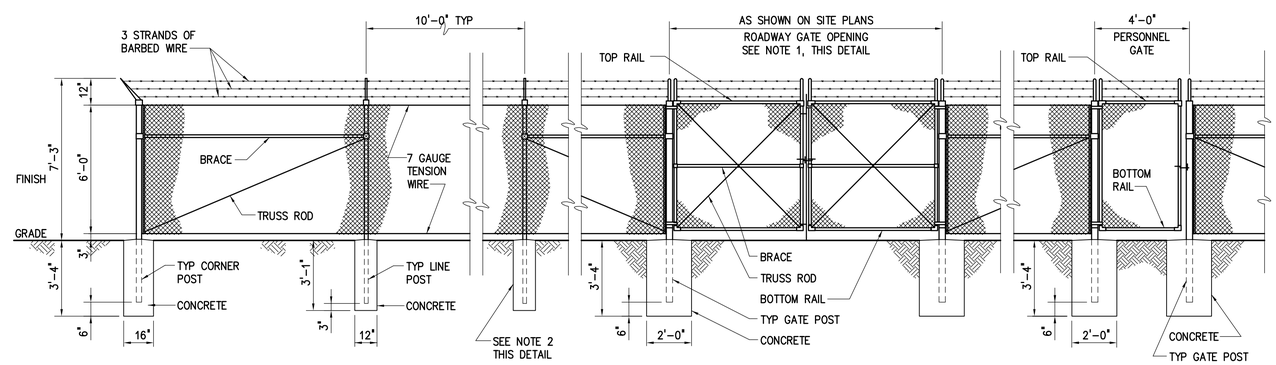

CORNER/LINE CHAIN LINK FENCE ROADWAY GATE PERSONNEL GATE

NOTES: 1. PROVIDE LATCHING DEVICES TO HOLD GATES IN OPEN POSITION.

2. IF ROCK IS ENCOUNTERED WHEN SETTING POSTS, DRILL HOLES 4 INCHES LARGER IN DIAMETER THAN POSTS AND BACKFILL TO GRADE WITH CLASS "B" CONCRETE.

CHAIN LINK FENCE AND GATES

DETAIL 7 / C-2 NTS

NO.	DATE	ISSUED FOR	BY
2	01/08	RECORD DRAWING	P.A.D.
1	10/03	BID SET	P.A.D.

DESIGNED H & S
DRAWN J.T.C.
CHECKED L.M.S.
PROJ. ENGR. P.A.D.

PATRICK A. DAVIS P.E.
No. 37167

HAZEN AND SAWYER
Environmental Engineers & Scientists
4000 Hollywood Boulevard, Suite 750N
Hollywood, Florida 33021
Certificate of Authorization Number: 2771

SCALE N.T.S.

CONTRACT: –
CLIENTS PROJECT:
ENGINEERS PROJECT: 40406
CAD REFERENCE: 40406C06

CITY OF HALLANDALE BEACH City of Choice
CITY OF HALLANDALE BEACH
UTILITIES DEPARTMENT

6 MGD MEMBRANE SOFTENING W.T.P.

MISCELLANEOUS CIVIL DETAILS

SHEET 2

DATE: JANUARY 2008
SHEET: 9 OF 162
DRAWING: C-6

RECORD DRAWING

PLOT DATE: 2/6/2008 4:45 PM BY: AMEDINA

XREFs:

File = O:\40406\40406-001\Drawings\CIVIL\40406C06 Saved by GDIAZ Save date = 1/30/2008 1:52 PM

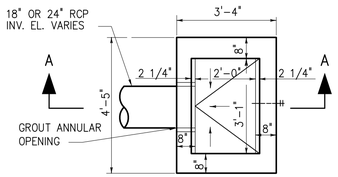

PLAN

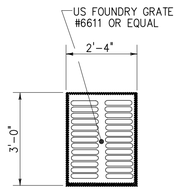

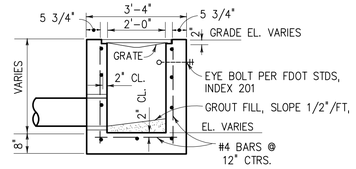

SECTION A–A

NOTES:

1. ALL GRATES SHALL BE HOT DIPPED GALVANIZED AFTER FABRICATION
2. ALL GRATES SHALL BE SUITABLE FOR H–20 LOADING (HIGHWAY TRAFFIC LOADS.)

CATCH BASIN DETAIL

DETAIL 1
NTS C–3

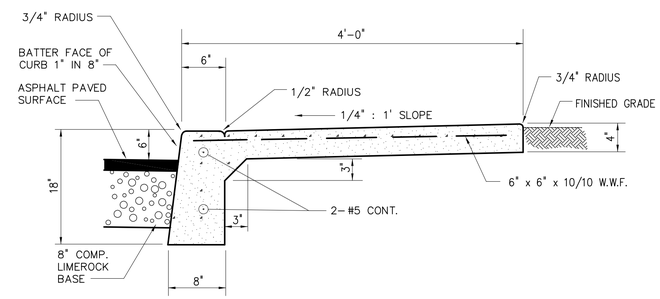

NOTE: THE ELEVATION OF THE FLOOR SURFACES ON BOTH SIDES OF A DOOR SHALL BE EQUAL AND THE ELEVATION SHALL BE MAINTAINED ON BOTH SIDES OF THE DOOR FOR A DISTANCE AT LEAST EQUAL TO THE WIDTH OF THE WIDEST LEAF.

CURB AND SIDEWALK DETAILS

DETAIL 2
NTS C–2

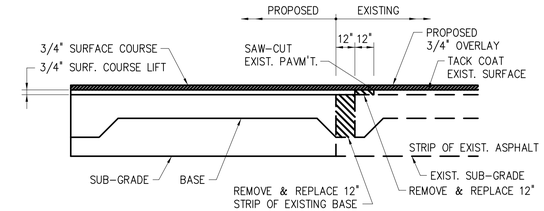

PAVEMENT SPECIFICATIONS	
SURFACE COURSE	1 1/2" TYPE S–I A.C.S.C. IN TWO 3/4" LIFTS
BASE	8" LIMEROCK COMPACTED TO 98% MAX. DENSITY PER AASHTO T–180. LIMEROCK BASE PER FDOT SECTION 911. PRIME & TACK COAT PER FDOT SECTION 300.
SUB–GRADE	12" STABILIZED (75 P.S.I. FBV) AND COMPACTED TO 98% MAX. DENSITY PER AASHTO T–180.

NOTES:

1. THE ELEVATION OF THE FLOOR SURFACES ON BOTH SIDES OF A DOOR SHALL BE EQUAL AND THE ELEVATION SHALL BE MAINTAINED ON BOTH SIDES OF THE DOOR FOR A DISTANCE AT LEAST EQUAL TO THE WIDTH OF THE WIDEST LEAF.
2. AREAS INDICATED FOR RESURFACING SHALL RECEIVE TACK COAT AND 3/4–INCH ASPHALT SURFACE COURSE OVERLAY.

TYPICAL PAVEMENT CROSS–SECTION

DETAIL 7
NTS C–2

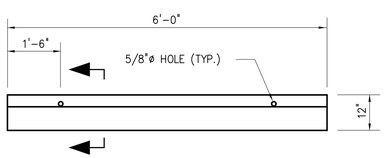

PLAN

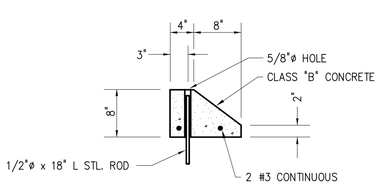

SECTION

WHEEL STOP DETAIL

DETAIL 4
NTS C–2

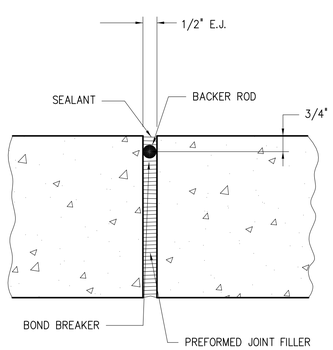

SIDEWALK EXPANSION JOINT DETAIL

DETAIL 5
NTS C–2

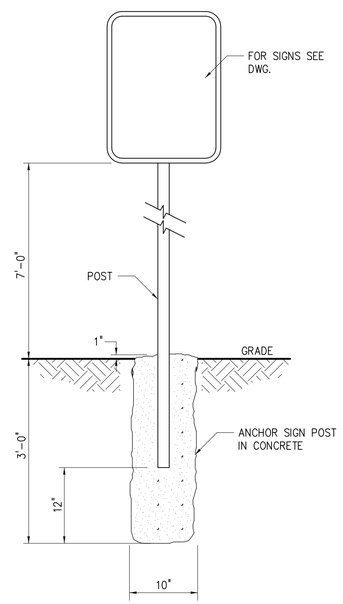

(FL–1)

TYPICAL SIGN POST DETAIL

DETAIL 6
NTS –

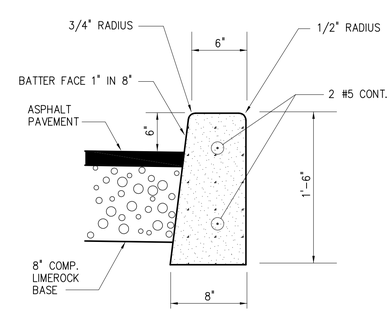

CURB DETAIL

DETAIL 3
NTS –

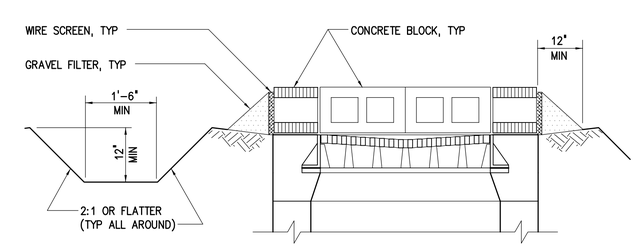

INLET EROSION CONTROL

DETAIL 8
NTS –

NO.	DATE	ISSUED FOR	BY
2	01/08	RECORD DRAWING	P.A.D.
1	10/03	BID SET	P.A.D.

DESIGNED H & S
DRAWN J.T.C.
CHECKED L.M.S.
PROJ. ENGR. P.A.D.

PATRICK A. DAVIS P.E.
No. 37167

HAZEN AND SAWYER
Environmental Engineers & Scientists
4000 Hollywood Boulevard, Suite 750N
Hollywood, Florida 33021
Certificate of Authorization Number: 2771

SCALE N.T.S.

CONTRACT: –
CLIENTS PROJECT:
ENGINEERS PROJECT: 40406
CAD REFERENCE: 40406C07

CITY OF HALLANDALE BEACH
UTILITIES DEPARTMENT

6 MGD MEMBRANE SOFTENING W.T.P.

MISCELLANEOUS CIVIL DETAILS

SHEET 3

DATE: JANUARY 2008
SHEET: 10 OF 162
DRAWING: C–7

RECORD DRAWING

RECD DATE: 2/6/2008 4:44 PM BY: AMEDINA

XREFs=

File = O:\40406\40406-001\Drawings\CIVIL\40406C07 Saved by GDIAZ Save date = 1/30/2008 1:53 PM

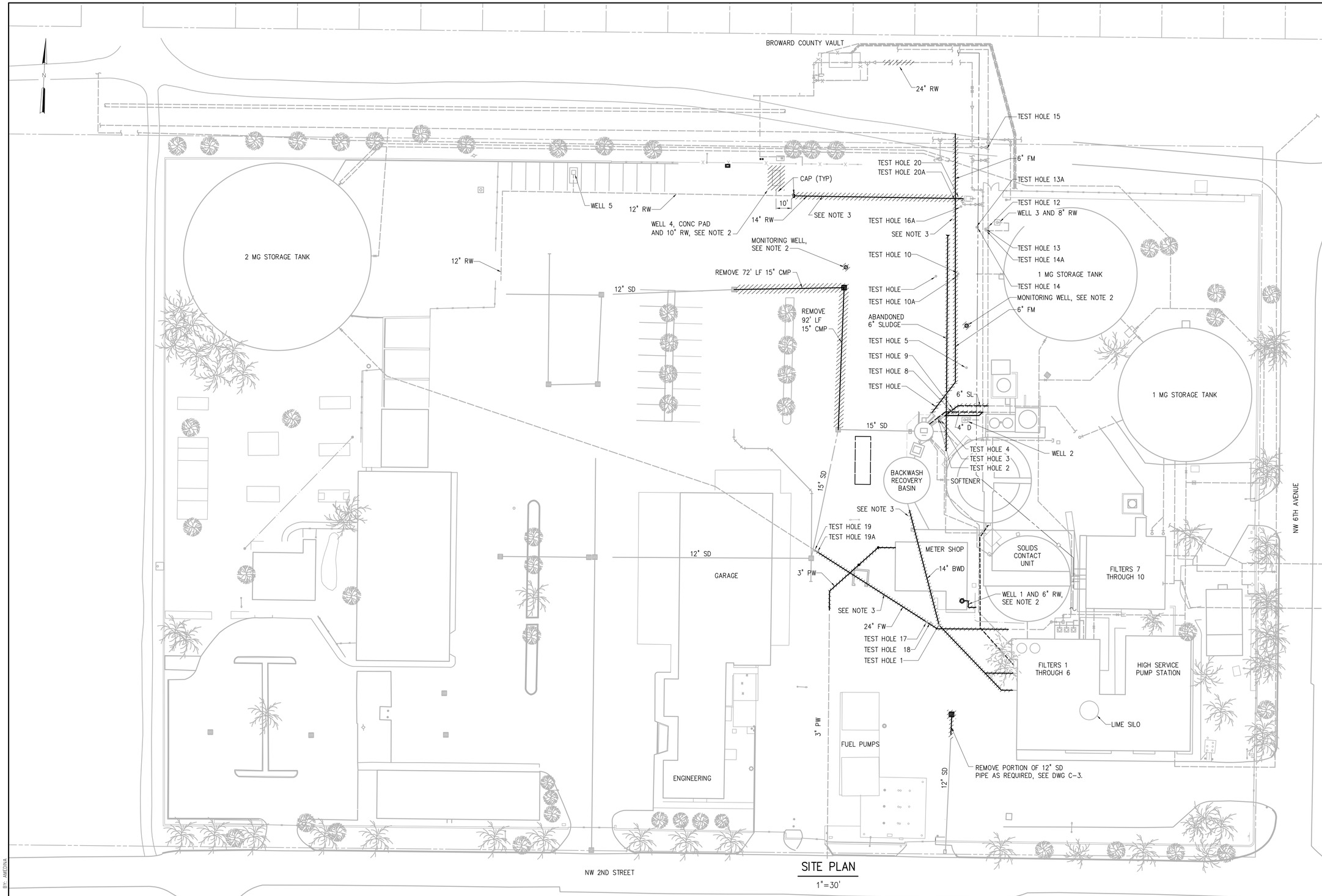

SITE PLAN

1"=30'

1"=30'-0"

30 15 0 30'

NOTES:

1. CONTRACTOR SHALL REFER TO APPENDIX B, UNDERGROUND UTILITY INVESTIGATION, FOR INFORMATION ON TEST HOLES LISTED ON THIS SHEET.
2. SEE SPECIFICATION SECTION 02050, DEMOLITION, FOR WELL DEMOLITION REQUIREMENTS.
3. CONTRACTOR SHALL ADHERE TO REQUIREMENTS PROVIDED IN SECTIONS ENTITLED " SUMMARY OF WORK" AND "MAINTENANCE OF UTILITY IN OPERATION DURING CONSTRUCTION".
4. UNDERGROUND UTILITIES SHOWN ARE TAKEN FROM EXISTING RECORDS AND ARE SHOWN FOR THE CONVENIENCE OF THE CONTRACTOR ONLY. THE CONTRACTOR SHALL CONTACT ALL UTILITY OWNER'S AND CONFIRM LOCATIONS OF UTILITIES AT LEAST 48 HOURS BEFORE BEGINNING CONSTRUCTION. THE CONTRACTOR SHALL SHALL ACCURATELY LOCATE AND UNCOVER ALL EXISTING UTILITIES BEFORE BEGINNING CONSTRUCTION. ANY DAMAGE RESULTING FROM THE CONTRACTOR'S OPERATIONS SHALL BE REPAIRED AT THE CONTRACTOR'S EXPENSE. WHERE CROSSING OF EXISTING UTILITIES OCCUR, PROVIDE 12" MINIMUM CLEARANCE EXCEPT WATER MAINS SHALL BE 18". CROSS UNDER ALL WATER MAINS WHERE NOT POSSIBLE TO PROVIDE 18" CLEARANCE.

LEGEND

PIPING TO REMAIN IN SERVICE

PIPING TO BE REMOVED

NO.	DATE	ISSUED FOR	BY
2	01/08	RECORD DRAWING	P.A.D.
1	10/03	BID SET	P.A.D.

DESIGNED D.M.L.
DRAWN W.D.R.
CHECKED P.A.D.
PROJ. ENGR. P.A.D.

PATRICK A. DAVIS P.E.
No. 37167

HAZEN AND SAWYER
Environmental Engineers & Scientists
4000 Hollywood Boulevard, Suite 750N
Hollywood, Florida 33021
Certificate of Authorization Number: 2771

SCALE 1"=30'

CONTRACT: –
CLIENTS PROJECT:
ENGINEERS PROJECT: 40406
CAD REFERENCE: 40406M01

CITY OF HALLANDALE BEACH
UTILITIES DEPARTMENT

6 MGD MEMBRANE SOFTENING W.T.P.

YARD PIPING
DEMOLITION

DATE: JANUARY 2008
SHEET: 11 OF 162
DRAWING: M-1

RECORD DRAWING

PLOT DATE: 2/11/2008 9:57 AM BY: AMEDINA

XREFs= O:\40406\40406-001\Drawings\001\SP-ST,O:\40406\40406-001\Drawings\001\Potable 2

File = O:\40406\40406-001\Drawings\MECH\40406M01 Saved by GDIAZ Save date = 2/4/2008 1:48 PM

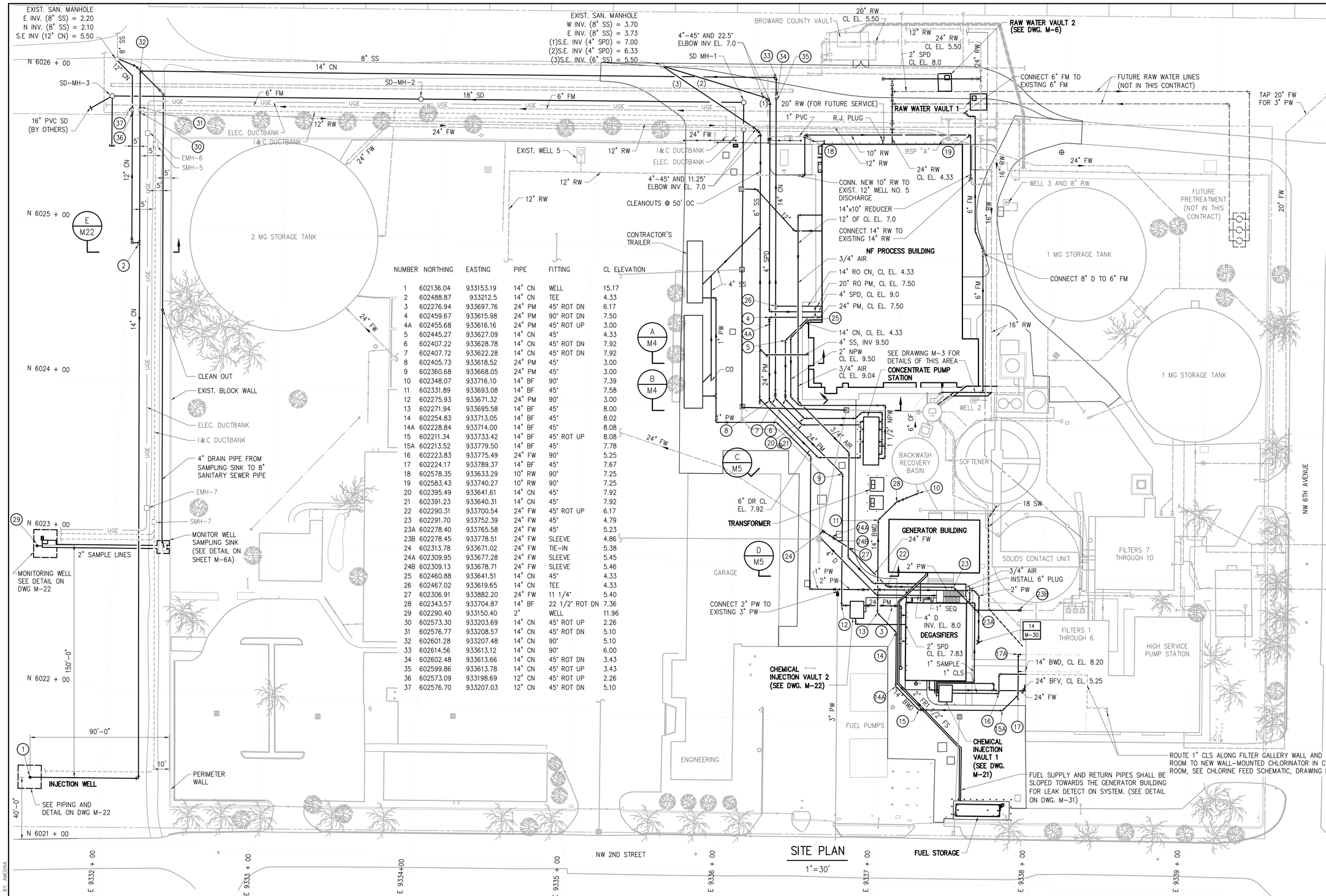

NUMBER	NORTHING	EASTING	PIPE	FITTING	CL ELEVATION
1	602136.04	933153.19	14" CN	WELL	15.17
2	602488.87	933212.5	14" CN	TEE	4.33
3	602276.94	933697.76	24" PM	45° ROT DN	6.17
4	602459.67	933615.98	24" PM	90° ROT DN	7.50
4A	602455.68	933616.16	24" PM	45° ROT UP	3.00
5	602445.27	933627.09	14" CN	45°	4.33
6	602407.22	933628.78	14" CN	45° ROT DN	7.92
7	602407.72	933622.28	14" CN	45° ROT DN	7.92
8	602405.73	933618.52	24" PM	45°	3.00
9	602360.68	933668.05	24" PM	45°	3.00
10	602348.07	933716.10	14" BF	90°	7.39
11	602331.89	933693.08	14" BF	45°	7.58
12	602275.93	933671.32	24" PM	90°	3.00
13	602271.94	933695.58	14" BF	45°	8.00
14	602254.83	933713.05	14" BF	45°	8.02
14A	602228.84	933714.00	14" BF	45°	8.08
15	602211.34	933733.42	14" BF	45° ROT UP	8.08
15A	602213.52	933779.50	14" BF	45°	7.78
16	602223.83	933775.49	24" FW	90°	5.25
17	602224.17	933789.37	14" BF	45°	7.67
18	602578.35	933633.29	10" RW	90°	7.25
19	602583.43	933740.27	10" RW	90°	7.25
20	602395.49	933641.61	14" CN	45°	7.92
21	602391.23	933640.31	14" CN	45°	7.92
22	602290.31	933700.54	24" FW	45° ROT UP	6.17
23	602291.70	933752.39	24" FW	45°	4.79
23A	602278.40	933765.58	24" FW	45°	5.23
23B	602278.45	933778.51	24" FW	SLEEVE	4.86
24	602313.78	933671.02	24" FW	TIE-IN	5.38
24A	602309.95	933677.28	24" FW	SLEEVE	5.45
24B	602309.13	933678.71	24" FW	SLEEVE	5.46
25	602460.88	933641.51	14" CN	45°	4.33
26	602467.02	933619.65	14" CN	TEE	4.33
27	602306.91	933882.20	24" FW	11 1/4°	5.40
28	602343.57	933704.87	14" BF	22 1/2° ROT DN	7.36
29	602290.40	933150.40	2"	WELL	11.96
30	602573.30	933203.69	14" CN	45° ROT UP	2.26
31	602576.77	933208.57	14" CN	45° ROT DN	5.10
32	602601.28	933207.48	14" CN	90°	5.10
33	602614.56	933613.12	14" CN	90°	6.00
34	602602.48	933613.66	14" CN	45° ROT DN	3.43
35	602599.86	933613.78	14" CN	45° ROT UP	3.43
36	602573.09	933198.69	12" CN	45° ROT UP	2.26
37	602576.70	933207.03	12" CN	45° ROT DN	5.10

SITE PLAN

1"=30'

LEGEND

- EXISTING STRUCTURES
- NEW STRUCTURES
- EXISTING PIPING
- NEW PIPING
- ELECTRICAL DUCTBANK

GENERAL CONSTRUCTION NOTES:

1. CONTRACTOR SHALL FIELD VERIFY EXISTING PIPING AND UTILITY LOCATION PRIOR TO BEGINNING. UNDERGROUND UTILITIES SHOWN ARE TAKEN FROM EXISTING RECORDS AND ARE SHOWN FOR THE CONVENIENCE OF THE CONTRACTOR ONLY. THE CONTRACTOR SHALL CONTACT ALL UTILITY OWNER'S AND CONFIRM LOCATIONS OF UTILITIES AT LEAST 48 HOURS BEFORE BEGINNING CONSTRUCTION. THE CONTRACTOR SHALL ACCURATELY LOCATE AND UNCOVER ALL EXISTING UTILITIES BEFORE BEGINNING CONSTRUCTION. ANY DAMAGE RESULTING FROM THE CONTRACTOR'S OPERATIONS SHALL BE REPAIRED AT THE CONTRACTOR'S EXPENSE. WHERE CROSSING OF EXISTING UTILITIES OCCUR, PROVIDE 12" MINIMUM CLEARANCE EXCEPT WATER MAINS SHALL BE 18". CROSS UNDER ALL WATER MAINS WHERE NOT POSSIBLE TO PROVIDE 18" CLEARANCE.
2. SEWER AND WATER SERVICE SHALL BE MAINTAINED DURING ENTIRE CONSTRUCTION PERIOD OR TEMPORARY FACILITIES PROVIDED.
3. MINIMUM COVER OVER PIPING SHALL BE 3'-0", BELOW FINISHED GRADE.
4. IF UNSATISFACTORY MATERIAL FOR ADEQUATE BEARING IS ENCOUNTERED AT THE NORMAL SUBGRADE, THE UNSATISFACTORY MATERIAL SHALL BE REMOVED AND REPLACED WITH SUITABLE FOUNDATION STABILIZATION MATERIAL AS SPECIFIED.
5. THE CONTRACTOR SHALL NOT DISTURB AREAS OUTSIDE THE PROJECT SITE.
6. UNLESS OTHERWISE NOTED, CHEMICAL LINES SHALL HAVE TWO FEET COVER.
7. CONTRACTOR SHALL ADHERE TO REQUIREMENTS PROVIDED IN SECTIONS ENTITLED "SUMMARY OF WORK" AND "MAINTENANCE OF UTILITY IN OPERATION DURING CONSTRUCTION".
8. FOR TRENCH DETAIL, SEE DRAWING C-6 DETAIL 2.
9. FOR STORM DRAIN MANHOLES AND PIPING SEE DWG. C-3

NO.	DATE	ISSUED FOR	BY
6	01/08	RECORD DRAWING	P.A.D.
5	07/14/05	CONSTRUCTION MODIFICATIONS	P.D.F.
4	05/05	18 SW ADDED TO DRAWING	P.A.D.
3	07/04	ADDENDUM No. 2	P.A.D.
2	06/04	ADDENDUM No. 1	P.A.D.
1	04/04	BID SET	P.A.D.

DESIGNED D.M.L.
DRAWN W.D.R.
CHECKED P.A.D.
PROJ. ENGR. P.A.D.

PATRICK A. DAVIS P.E.
No. 37167

HAZEN AND SAWYER
Environmental Engineers & Scientists
4000 Hollywood Boulevard, Suite 750N
Hollywood, Florida 33021
Certificate of Authorization Number: 2771

SCALE 1"=30'

CONTRACT: –
CLIENTS PROJECT:
ENGINEERS PROJECT: 40406
CAD REFERENCE: 40406M02

CITY OF HALLANDALE BEACH
City of Choice
CITY OF HALLANDALE BEACH
UTILITIES DEPARTMENT

6 MGD MEMBRANE SOFTENING W.T.P.

YARD PIPING PLAN

DATE: JANUARY 2008
SHEET: 12 OF 162
DRAWING: M-2

RECORD DRAWING

BY: AMEDINA
PLOT DATE: 2/11/2008 9:57 AM
XREFs= ..\001\SP-ST,..\001\Potable 2
File = O:\40406\40406-001\Drawings\MECH\40406M02 Saved by JKOHLER Save date = 2/4/2008 11:55 AM

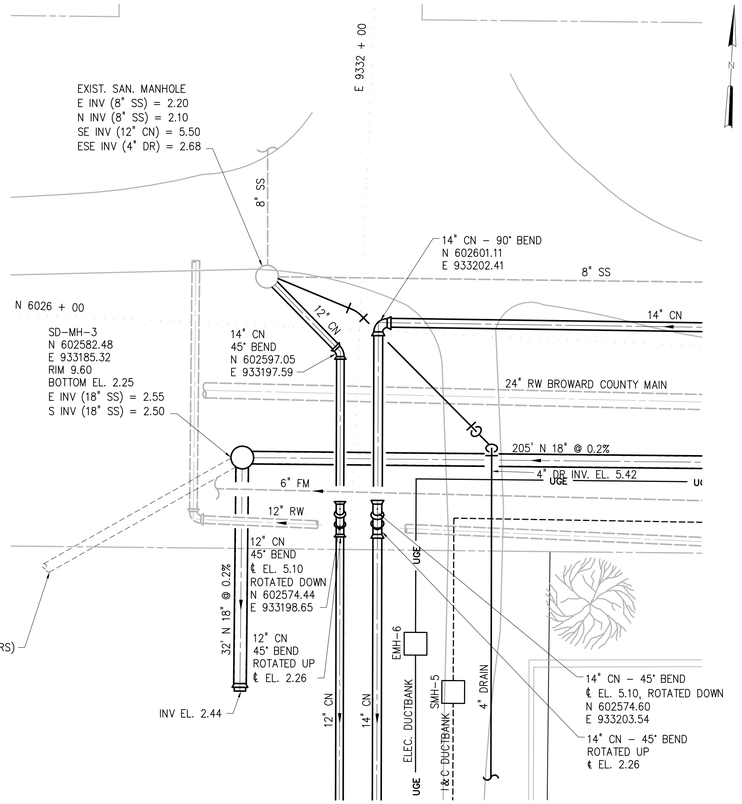

PARTIAL SITE PLAN – ENLARGED VIEW No. 1

1"=10'

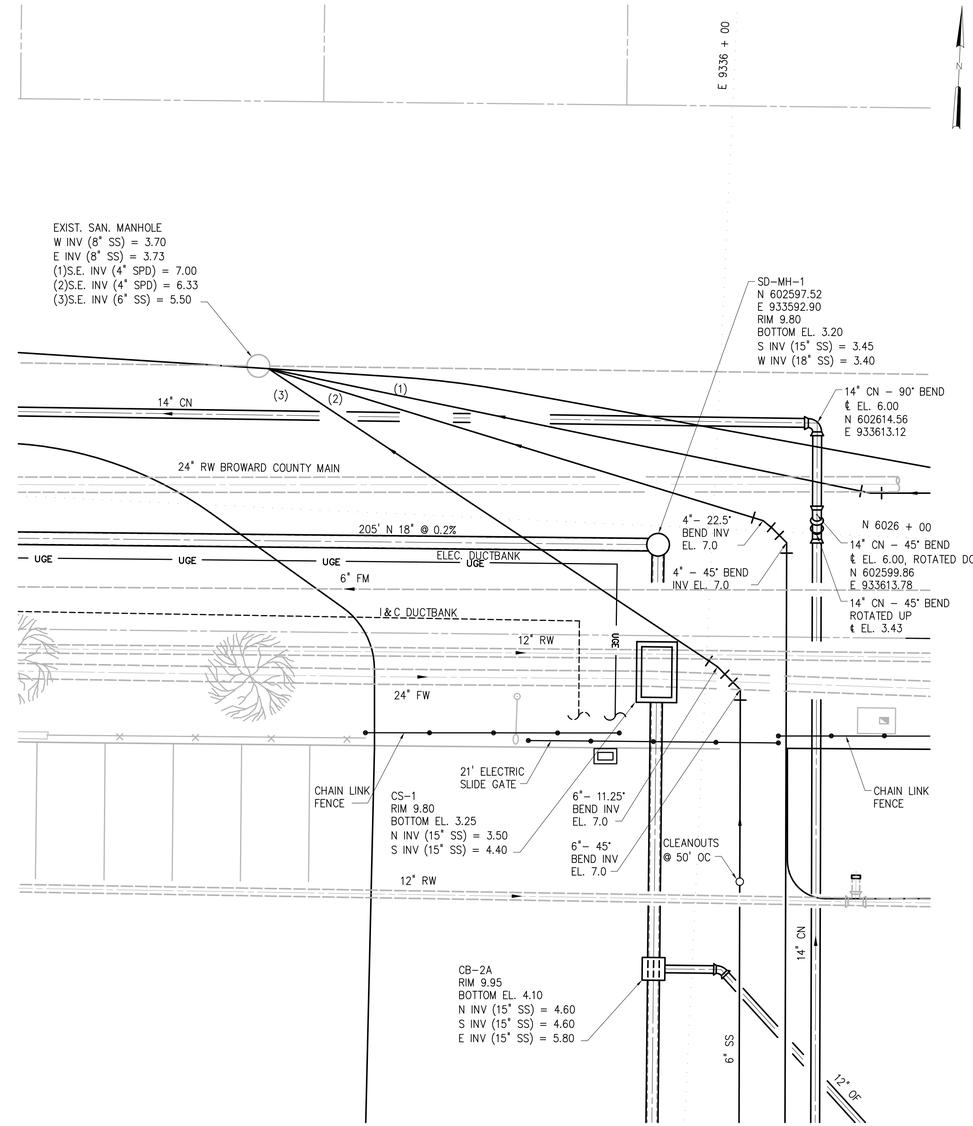

PARTIAL SITE PLAN – ENLARGED VIEW No. 2

1"=10'

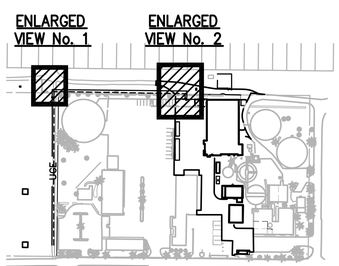

KEY MAP

LEGEND

- EXISTING STRUCTURES
- NEW STRUCTURES
- EXISTING PIPING
- NEW PIPING
- UGE — ELECTRICAL DUCTBANK
- I&C DUCTBANK

1"=10'–0" 10 5 0 10'

NO.	DATE	ISSUED FOR	BY
2	01/08	RECORD DRAWING	P.A.D.
1	07/14/05	CONSTRUCTION MODIFICATIONS	P.D.F.

DESIGNED D.M.L.
DRAWN W.D.R.
CHECKED P.A.D.
PROJ. ENGR. P.A.D.

PATRICK A. DAVIS P.E.
No. 37167

HAZEN AND SAWYER
Environmental Engineers & Scientists
4000 Hollywood Boulevard, Suite 750N
Hollywood, Florida 33021
Certificate of Authorization Number: 2771

SCALE 1"=10'

CONTRACT: –
CLIENTS PROJECT:
ENGINEERS PROJECT: 40406
CAD REFERENCE: 40406M02A

CITY OF HALLANDALE BEACH
UTILITIES DEPARTMENT

6 MGD MEMBRANE SOFTENING W.T.P.

YARD PIPING
PARTIAL PLAN

DATE: JANUARY 2008
SHEET: 12A OF 162
DRAWING: M–2A

RECORD DRAWING

PLOT DATE: 2/11/2008 9:57 AM BY: AMEDINA

XREFs= O:\40406\40406-001\Drawings\001\SP-ST10,..\MISC\PARAMOUNT ENG SURVEY\HallandaleWTP_C-2

File = O:\40406\40406-001\Drawings\MECH\40406M02A Saved by GDIAZ Save date = 2/4/2008 10:08 AM

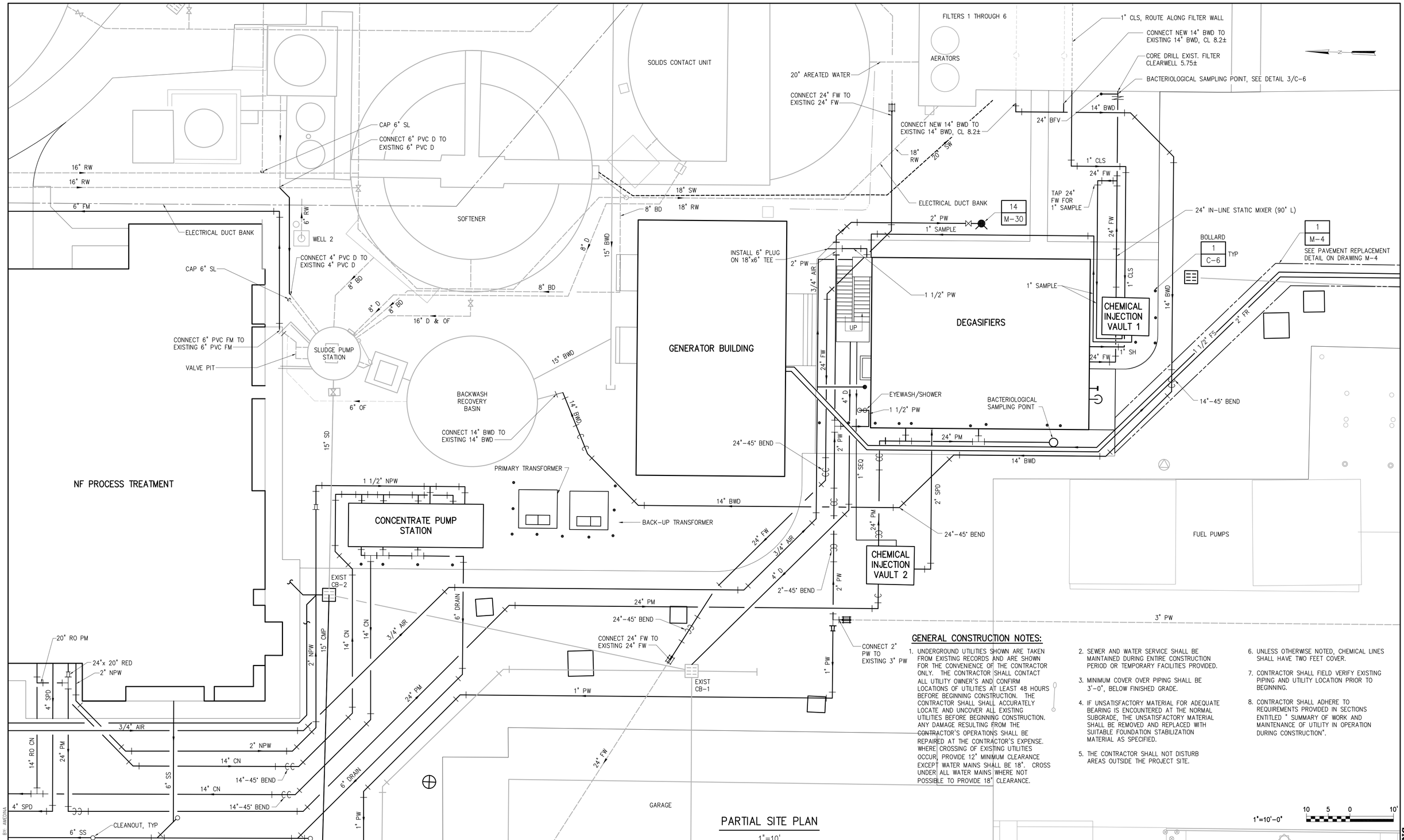

GENERAL CONSTRUCTION NOTES:

1. UNDERGROUND UTILITIES SHOWN ARE TAKEN FROM EXISTING RECORDS AND ARE SHOWN FOR THE CONVENIENCE OF THE CONTRACTOR ONLY. THE CONTRACTOR SHALL CONTACT ALL UTILITY OWNER'S AND CONFIRM LOCATIONS OF UTILITIES AT LEAST 48 HOURS BEFORE BEGINNING CONSTRUCTION. THE CONTRACTOR SHALL SHALL ACCURATELY LOCATE AND UNCOVER ALL EXISTING UTILITIES BEFORE BEGINNING CONSTRUCTION. ANY DAMAGE RESULTING FROM THE CONTRACTOR'S OPERATIONS SHALL BE REPAIRED AT THE CONTRACTOR'S EXPENSE. WHERE CROSSING OF EXISTING UTILITIES OCCUR, PROVIDE 12" MINIMUM CLEARANCE EXCEPT WATER MAINS SHALL BE 18". CROSS UNDER ALL WATER MAINS WHERE NOT POSSIBLE TO PROVIDE 18" CLEARANCE.
2. SEWER AND WATER SERVICE SHALL BE MAINTAINED DURING ENTIRE CONSTRUCTION PERIOD OR TEMPORARY FACILITIES PROVIDED.
3. MINIMUM COVER OVER PIPING SHALL BE 3'-0", BELOW FINISHED GRADE.
4. IF UNSATISFACTORY MATERIAL FOR ADEQUATE BEARING IS ENCOUNTERED AT THE NORMAL SUBGRADE, THE UNSATISFACTORY MATERIAL SHALL BE REMOVED AND REPLACED WITH SUITABLE FOUNDATION STABILIZATION MATERIAL AS SPECIFIED.
5. THE CONTRACTOR SHALL NOT DISTURB AREAS OUTSIDE THE PROJECT SITE.
6. UNLESS OTHERWISE NOTED, CHEMICAL LINES SHALL HAVE TWO FEET COVER.
7. CONTRACTOR SHALL FIELD VERIFY EXISTING PIPING AND UTILITY LOCATION PRIOR TO BEGINNING.
8. CONTRACTOR SHALL ADHERE TO REQUIREMENTS PROVIDED IN SECTIONS ENTITLED " SUMMARY OF WORK AND MAINTENANCE OF UTILITY IN OPERATION DURING CONSTRUCTION".

1"=10'-0"

NO.	DATE	ISSUED FOR	BY
4	01/08	RECORD DRAWING	P.A.D.
3	07/14/05	CONSTRUCTION MODIFICATIONS	P.D.F.
2	05/05	18 SW ADDED TO DRAWING	P.A.D.
1	10/03	BID SET	P.A.D.

DESIGNED M.D.L.
DRAWN W.D.R.
CHECKED P.A.D.
PROJ. ENGR. P.A.D.

PATRICK A. DAVIS P.E.
No. 37167

HAZEN AND SAWYER
Environmental Engineers & Scientists
4000 Hollywood Boulevard, Suite 750N
Hollywood, Florida 33021
Certificate of Authorization Number: 2771

SCALE 1"=10'

CONTRACT: –
CLIENTS PROJECT:
ENGINEERS PROJECT: 40406
CAD REFERENCE: 40406M03

CITY OF HALLANDALE BEACH
UTILITIES DEPARTMENT

6 MGD MEMBRANE SOFTENING W.T.P.

YARD PIPING
PARTIAL PLAN

DATE: JANUARY 2008
SHEET: 13 OF 162
DRAWING: M-3

RECORD DRAWING

BY: AMETINA
RSOT DATE: 2/11/2008 9:57 AM

XREFs= ..\001\SP-ST,Water_Pipes,..\001\Potable 2

File = O:\40406\40406-001\Drawings\MECH\40406M03 Saved by GDIAZ Save date = 2/4/2008 1:31 PM

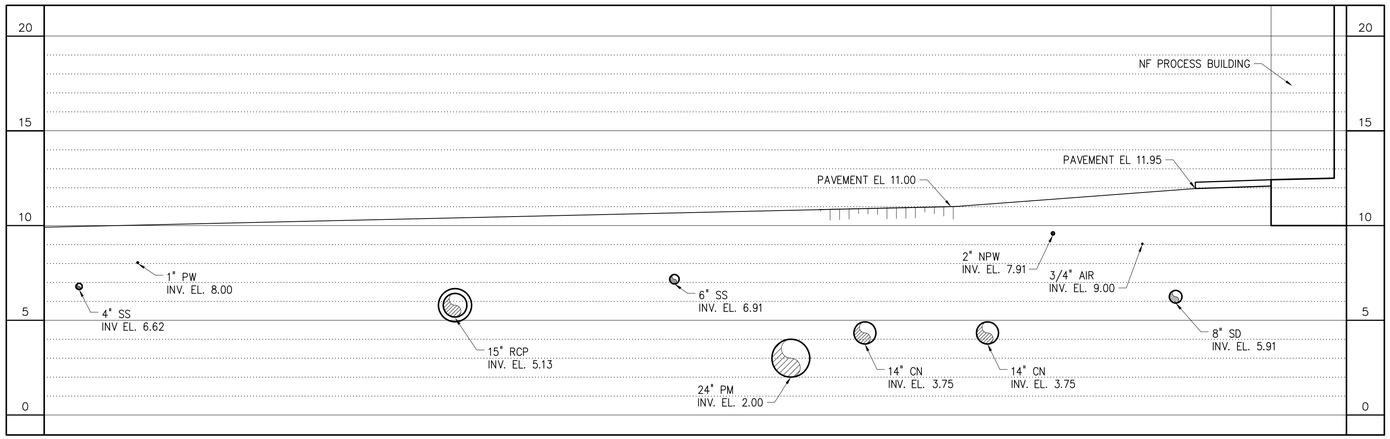

SECTION A / M2
1/4"=1'-0"

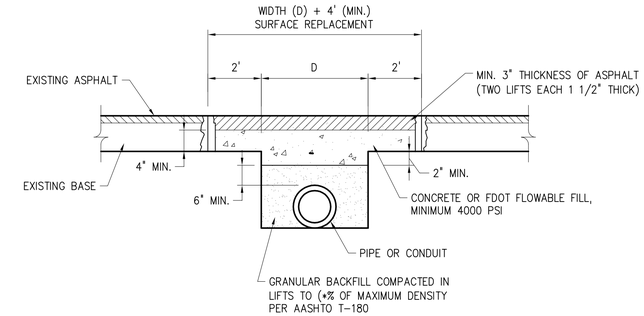

NOTES:

1. ASPHALT CONCRETE PAVEMENT JOINTS SHALL BE MECHANICALLY SAWED.
2. SURFACE MATERIAL SHALL BE CONSISTENT WITH EXISTING SURFACE, WITH ASPHALT A MINIMUM OF 2" THICK.
3. DENSITY TESTS SHALL BE CONDUCTED BY A CERTIFIED LABORATORY. THE PERCENTAGE OF MAXIMUM DENSITY REQUIRED SHALL BE IN ACCORDANCE WITH THE LATEST EDITION OF "THE FLORIDA DEPARTMENT OF TRANSPORTATION STANDARD SPECIFICATIONS FOR ROAD AND BRIDGE CONSTRUCTION". DENSITY TESTS SHALL BE COMPLETED AND ACCEPTED ON EACH LAYER PRIOR TO ADDITIONAL BACKFILLING. A COPY OF COMPLETED AND ACCEPTED DENSITY TESTS SHALL BE FURNISHED TO THE ENGINEER. BACKFILL COMPACTION SHALL BE 98 % OF MAXIMUM DENSITY PER AASHTO T-180.
4. DAMAGE TO TRAFFIC SIGNALIZATION EQUIPMENT SHALL BE REPAIRED AT THE CONTRACTORS EXPENSE.
5. THESE SPECIFICATIONS MAY BE SUPERSEDED BY THE PERMITTING AGENCY.
6. TEMPORARY ASPHALT PATCH MUST BE PLACE WITHIN 48 HOURS. TRAFFIC AREAS OR WHERE SAFETY TO THE PUBLIC IS AT ISSUE A TEMPORARY ASPHALT PATCH MUST BE IMMEDIATELY PLACED.

PAVEMENT REPLACEMENT DETAIL

DETAIL 1 / M-3
3/4"=1'-0"

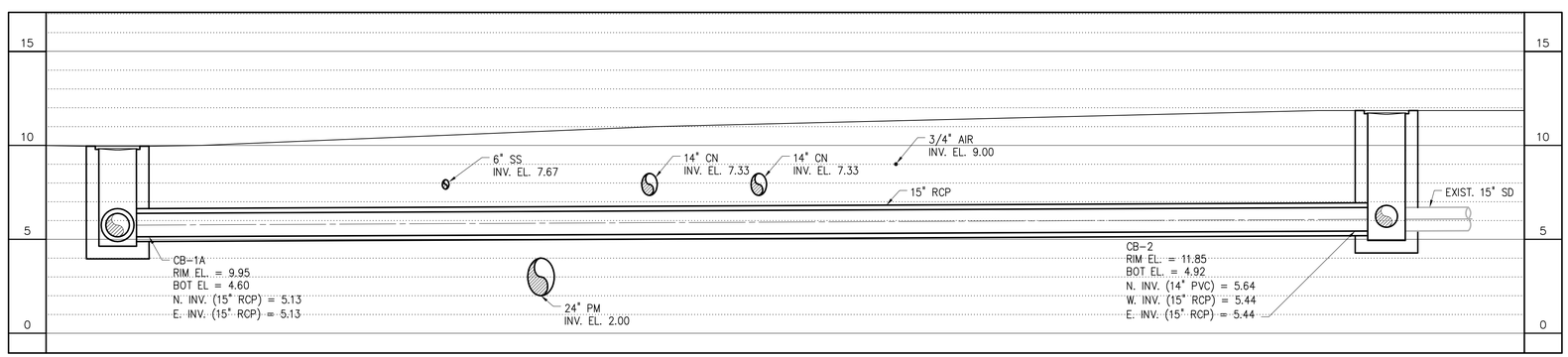

SECTION B / M2
1/4"=1'-0"

NOTES:

1. EXISTING CONDUITS NOT SHOWN. CONTRACTOR SHALL FIELD VERIFY CONDUIT LOCATION AND RELOCATE AS REQUIRED.
2. CONTRACTOR SHALL FIELD VERIFY EXISTING PIPING LOCATIONS PRIOR TO BEGINNING NEW PIPE INSTALLATION.

1/4"=1'-0" 1 0 1 2 3 7'

NO.	DATE	ISSUED FOR	BY
3	01/08	RECORD DRAWING	P.A.D.
2	06/04	ADDENDUM No. 1	P.A.D.
1	04/04	BID SET	P.A.D.

DESIGNED D.M.L.
DRAWN G.H.D.
CHECKED J.M.W.
PROJ. ENGR. P.A.D.

PATRICK A. DAVIS P.E.
No. 37167

HAZEN AND SAWYER
Environmental Engineers & Scientists
4000 Hollywood Boulevard, Suite 750N
Hollywood, Florida 33021
Certificate of Authorization Number: 2771

SCALE 1/4"=1'-0"

CONTRACT: –
CLIENTS PROJECT:
ENGINEERS PROJECT: 40406
CAD REFERENCE: 40406M04

CITY OF HALLANDALE BEACH
UTILITIES DEPARTMENT

6 MGD MEMBRANE SOFTENING W.T.P.

YARD PIPING

SECTIONS – SHEET 1

DATE: JANUARY 2008
SHEET: 14 OF 162
DRAWING: M-4

RECORD DRAWING

PLOT DATE: 2/11/2008 9:57 AM BY: AMEDINA

XREFs= ..\001\SP-ST,..\001\SPOTS,..\001\Potable 2

File = O:\40406\40406-001\Drawings\MECH\40406M04 Saved by JKOHLER Save date = 1/31/2008 5:09 PM

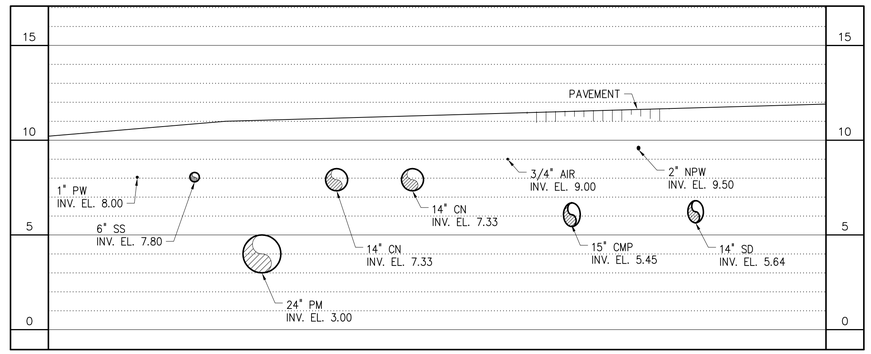

SECTION C/M2
1/4"=1'-0"

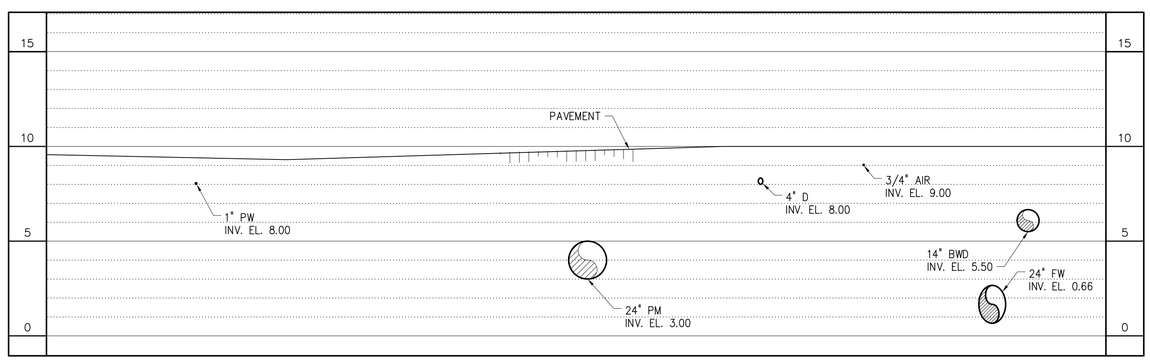

SECTION D/M2
1/4"=1'-0"

NOTES:
1. EXISTING CONDUITS NOT SHOWN. CONTRACTOR SHALL FIELD VERIFY CONDUIT LOCATION AND RELOCATE AS REQUIRED.
2. CONTRACTOR SHALL FIELD VERIFY EXISTING PIPING LOCATIONS PRIOR TO BEGINNING NEW PIPE INSTALLATION.

1/4"=1'-0" 1 0 1 2 3 7'

NO.	DATE	ISSUED FOR	BY
1	01/08	RECORD DRAWING	P.A.D.

DESIGNED D.M.L.
DRAWN G.H.D.
CHECKED J.M.W.
PROJ. ENGR. P.A.D.

PATRICK A. DAVIS P.E.
No. 37167

HAZEN AND SAWYER
Environmental Engineers & Scientists
4000 Hollywood Boulevard, Suite 750N
Hollywood, Florida 33021
Certificate of Authorization Number: 2771

SCALE 1/4"=1'-0"

CONTRACT: –
CLIENTS PROJECT:
ENGINEERS PROJECT: 40406
CAD REFERENCE: 40406M05

CITY OF HALLANDALE BEACH
UTILITIES DEPARTMENT

6 MGD MEMBRANE SOFTENING W.T.P.

YARD PIPING

SECTIONS – SHEET 2

DATE: JANUARY 2008
SHEET: 15 OF 162
DRAWING: M-5

RECORD DRAWING

PLOT DATE: 2/11/2008 9:57 AM BY: AMEDINA

XREFs= ..\001\SP-ST,..\001\SPOTS,..\200\PT-S04-S,..\001\Potable 2

File = O:\40406\40406-001\Drawings\MECH\40406M05 Saved by GDIAZ Save date = 1/31/2008 5:10 PM

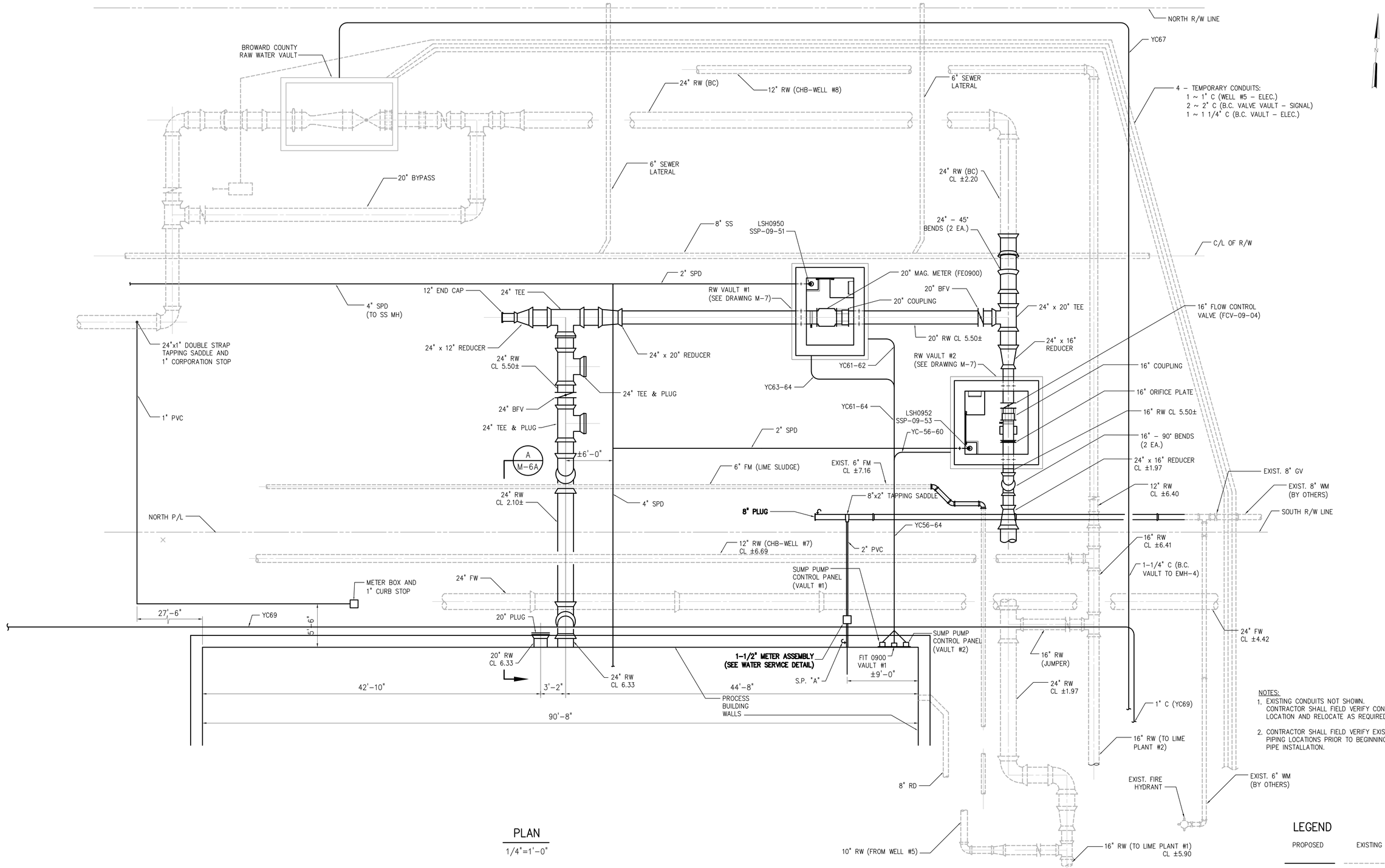

NOTES:

1. EXISTING CONDUITS NOT SHOWN. CONTRACTOR SHALL FIELD VERIFY CONDUIT LOCATION AND RELOCATE AS REQUIRED.
2. CONTRACTOR SHALL FIELD VERIFY EXISTING PIPING LOCATIONS PRIOR TO BEGINNING NEW PIPE INSTALLATION.

PLAN

1/4"=1'-0"

NO.	DATE	ISSUED FOR	BY
3	01/08	RECORD DRAWING	P.A.D.
2	07/04	ADDENDUM No. 2	P.A.D.
1	10/03	BID SET	P.A.D.

DESIGNED 162
DRAWN W.D.R.
CHECKED P.A.D.
PROJ. ENGR. P.A.D.

PATRICK A. DAVIS P.E.
No. 37167

HAZEN AND SAWYER
Environmental Engineers & Scientists
4000 Hollywood Boulevard, Suite 750N
Hollywood, Florida 33021
Certificate of Authorization Number: 2771

SCALE 1/4"=1'-0"

CONTRACT: –
CLIENTS PROJECT:
ENGINEERS PROJECT: 40406
CAD REFERENCE: 40406M06

CITY OF HALLANDALE BEACH
UTILITIES DEPARTMENT

6 MGD MEMBRANE SOFTENING W.T.P.

RAW WATER PIPING PLAN

DATE: JANUARY 2008
SHEET: 16 OF 162
DRAWING: M-6

RECORD DRAWING

PLOT DATE: 2/11/2008 9:57 AM BY: AMEDINA
XREFs= ..\001\RWV-PB
File = O:\40406\40406-001\Drawings\MECH\40406M06 Saved by GDIAZ Save date = 2/4/2008 9:56 AM

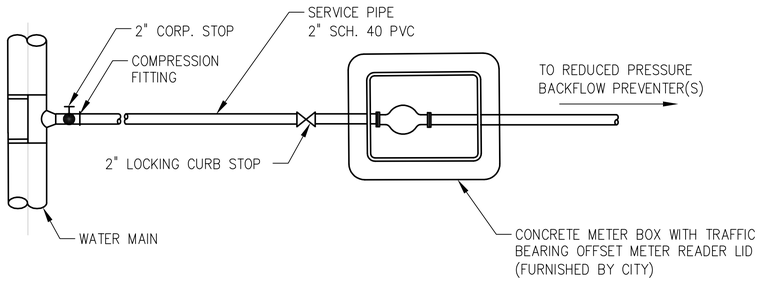

PLAN

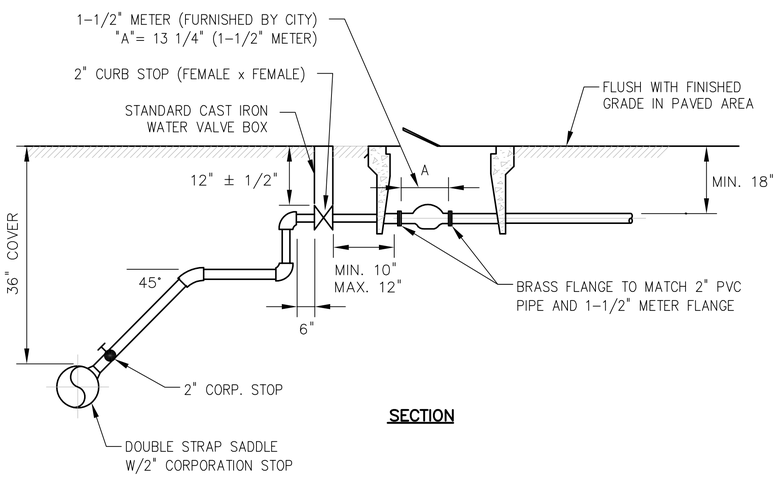

SECTION

NOTES:

1. FOR INSTALLATION OF SERVICES UNDER DRIVEWAYS, SIDEWALKS AND ROADS USE MIN. 4" DIAMETER PVC SCHEDULE 40 CASING. END OF CASING TO BE SEALED WITH CEMENT GROUT.
2. METER SHALL NOT BE PLACED IN SIDEWALK OR DRIVEWAY AREAS.
3. BEDDING (MIN. 4") AND COVER (MIN. 4") OVER SERVICE LINE OR CASING SHALL CONSIST OF FINE GRANULAR MATERIAL. UNSUITABLE IN-SITU MATERIALS SUCH AS MUCK, DEBRIS AND LARGE ROCKS SHALL BE REMOVED WITH 2" MAXIMUM SIZE.
4. METER SHALL BE FURNISHED BY THE CITY AND INSTALLED BY THE CONTRACTOR.
5. CONTRACTOR SHALL CONSTRUCT SERVICE COMPONENTS FOR THE METER TO BE INSTALLED "TRUE" AND "PLUMB" AND TO ALLOW METER READING THROUGH THE METER READER LID.
6. ALL HARDWARE FOR FLANGED CONNECTIONS (BOLTS ETC.) TO BE STAINLESS STEEL.
7. THREADED AREAS OF CORPORATION STOP AND OTHER FITTINGS SHALL BE SPIRAL WRAPPED WITH TWO (2) WRAPS OF TEFLON TAPE.

WATER SERVICE DETAIL – SINGLE METER (1-1/2")

NTS

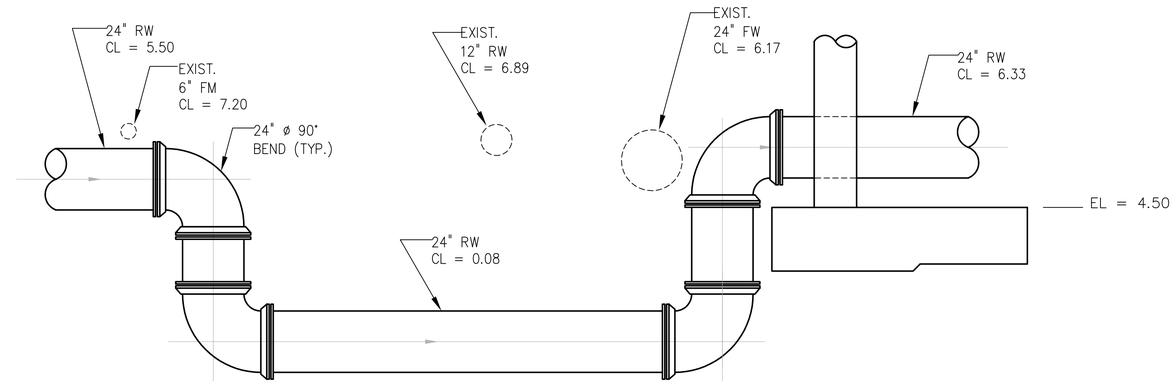

RAW WATER YARD PIPING PLAN

SECTION A / M-6

1/2"=1'-0"

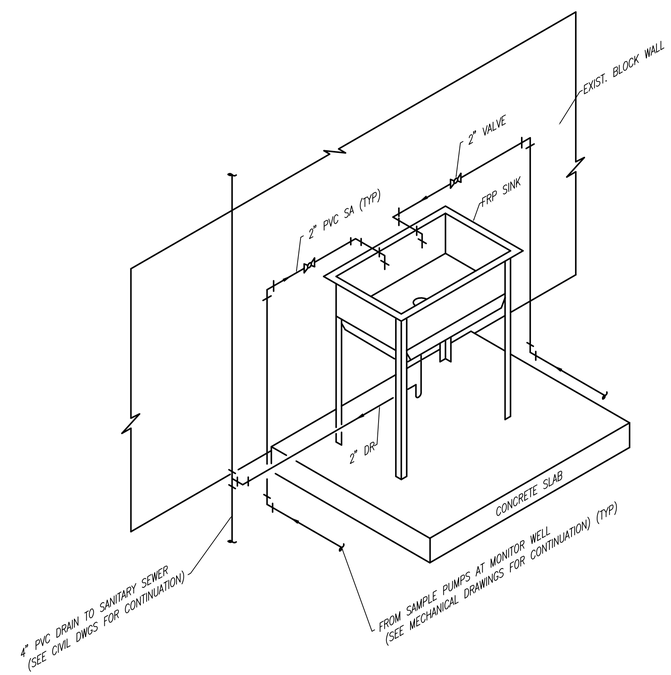

MONITOR WELL SAMPLING SINK ISOMETRIC

1/2"=1'-0"

NO.	DATE	ISSUED FOR	BY
3	01/08	RECORD DRAWING	P.A.D.
2	07/04	ADDENDUM No. 2	P.A.D.
1	10/03	BID SET	P.A.D.

DESIGNED 162
DRAWN W.D.R.
CHECKED P.A.D.
PROJ. ENGR. P.A.D.

PATRICK A. DAVIS P.E.
No. 37167

HAZEN AND SAWYER
Environmental Engineers & Scientists
4000 Hollywood Boulevard, Suite 750N
Hollywood, Florida 33021
Certificate of Authorization Number: 2771

SCALE 1/4"=1'-0"

CONTRACT: –
CLIENTS PROJECT:
ENGINEERS PROJECT: 40406
CAD REFERENCE: 40406M06

CITY OF HALLANDALE BEACH
UTILITIES DEPARTMENT

6 MGD MEMBRANE SOFTENING W.T.P.

RAW WATER PIPING PLAN

DATE: JANUARY 2008
SHEET: 16 OF 162
DRAWING: M-6A

RECORD DRAWING

PLOT DATE: 2/11/2008 9:58 AM BY: AMEDINA

XREFs=

File = O:\40406\40406-001\Drawings\MECH\40406M06A Saved by GDIAZ Save date = 2/4/2008 11:19 AM

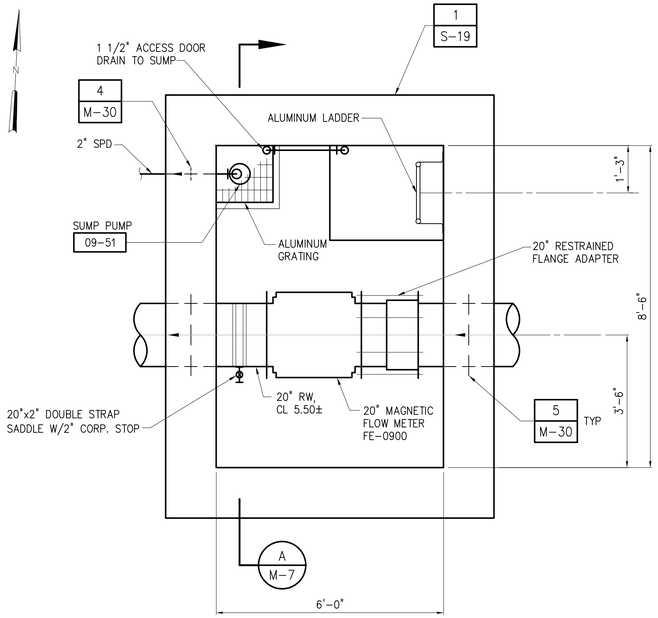

VAULT 1
BOTTOM PLAN
1/2"=1'-0"

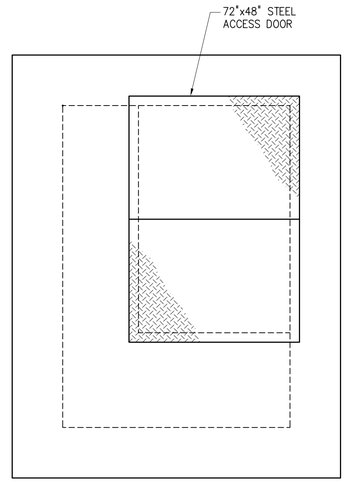

VAULT 1
TOP PLAN
1/2"=1'-0"

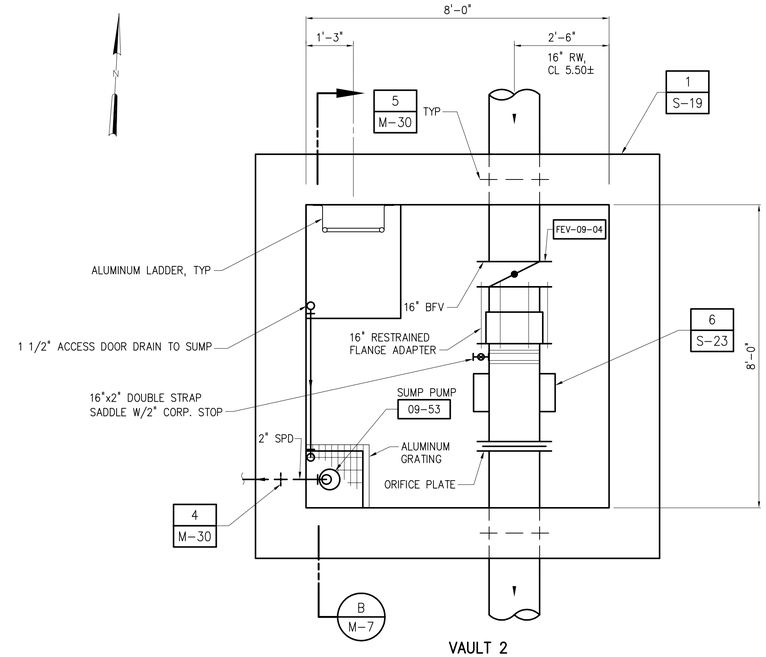

VAULT 2
BOTTOM PLAN
1/2"=1'-0"

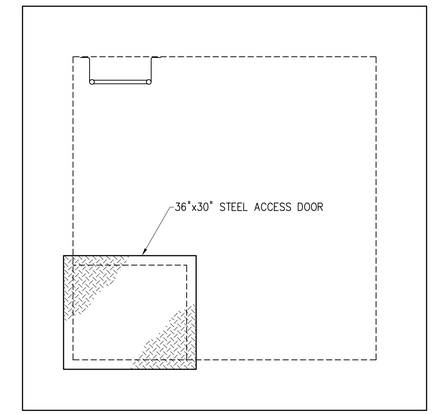

VAULT 2
TOP PLAN
1/2"=1'-0"

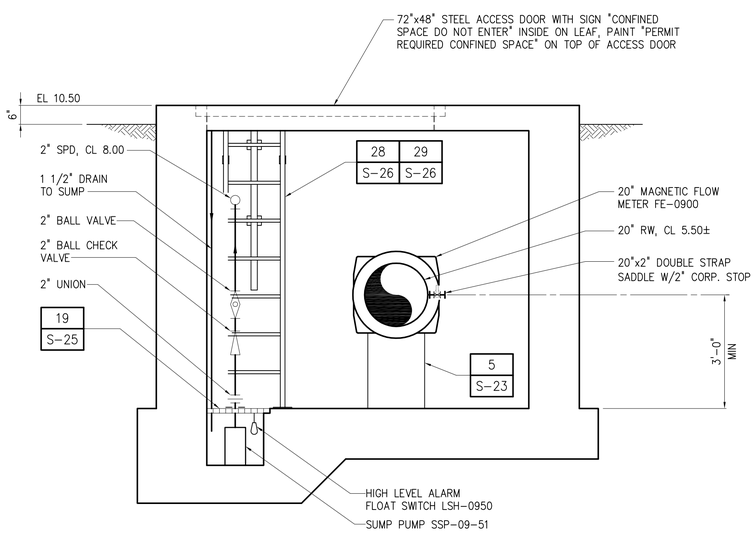

SECTION A M-7
1/2"=1'-0"

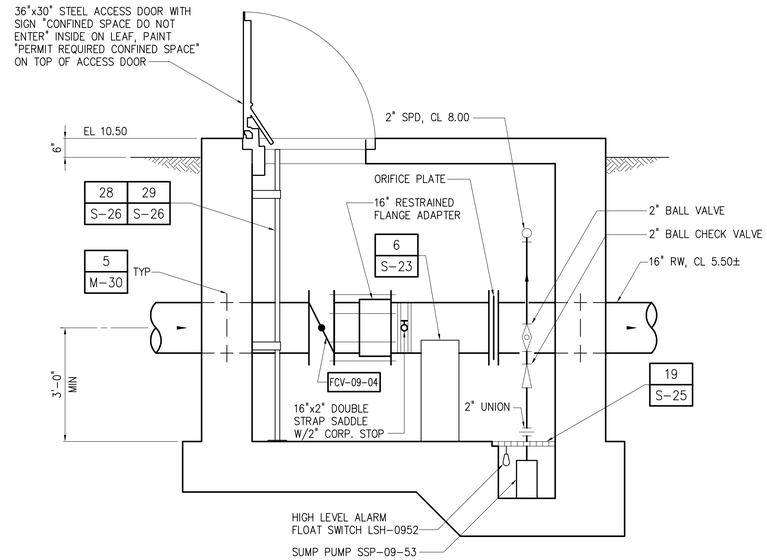

SECTION B M-7
1/2"=1'-0"

1/2"=1'-0" 12" 0 1 3'

NO.	DATE	ISSUED FOR	BY
2	01/08	RECORD DRAWING	P.A.D.
1	10/03	BID SET	P.A.D.

DESIGNED D.M.L.
DRAWN W.D.R.
CHECKED P.A.D.
PROJ. ENGR. P.A.D.

PATRICK A. DAVIS P.E.
No. 37167

HAZEN AND SAWYER
Environmental Engineers & Scientists
4000 Hollywood Boulevard, Suite 750N
Hollywood, Florida 33021
Certificate of Authorization Number: 2771

SCALE 1/2"=1'-0"

CONTRACT: –
CLIENTS PROJECT:
ENGINEERS PROJECT: 40406
CAD REFERENCE: 40406M07

CITY OF HALLANDALE BEACH
City of Choice
CITY OF HALLANDALE BEACH
UTILITIES DEPARTMENT

6 MGD MEMBRANE SOFTENING W.T.P.

RAW WATER VAULTS
PLANS AND SECTIONS

DATE: JANUARY 2008
SHEET: 17 OF 162
DRAWING: M-7

RECORD DRAWING

PLOT DATE: 2/11/2008 9:58 AM BY: AMEDINA

XREFs= ..\001\RWV-PB,..\001\RWV1-PT,..\001\RWV2-PT,..\001\RWV1-S01,..\001\RWV2-S01

File = O:\40406\40406-001\Drawings\MECH\40406M07 Saved by GDIAZ Save date = 1/30/2008 2:06 PM

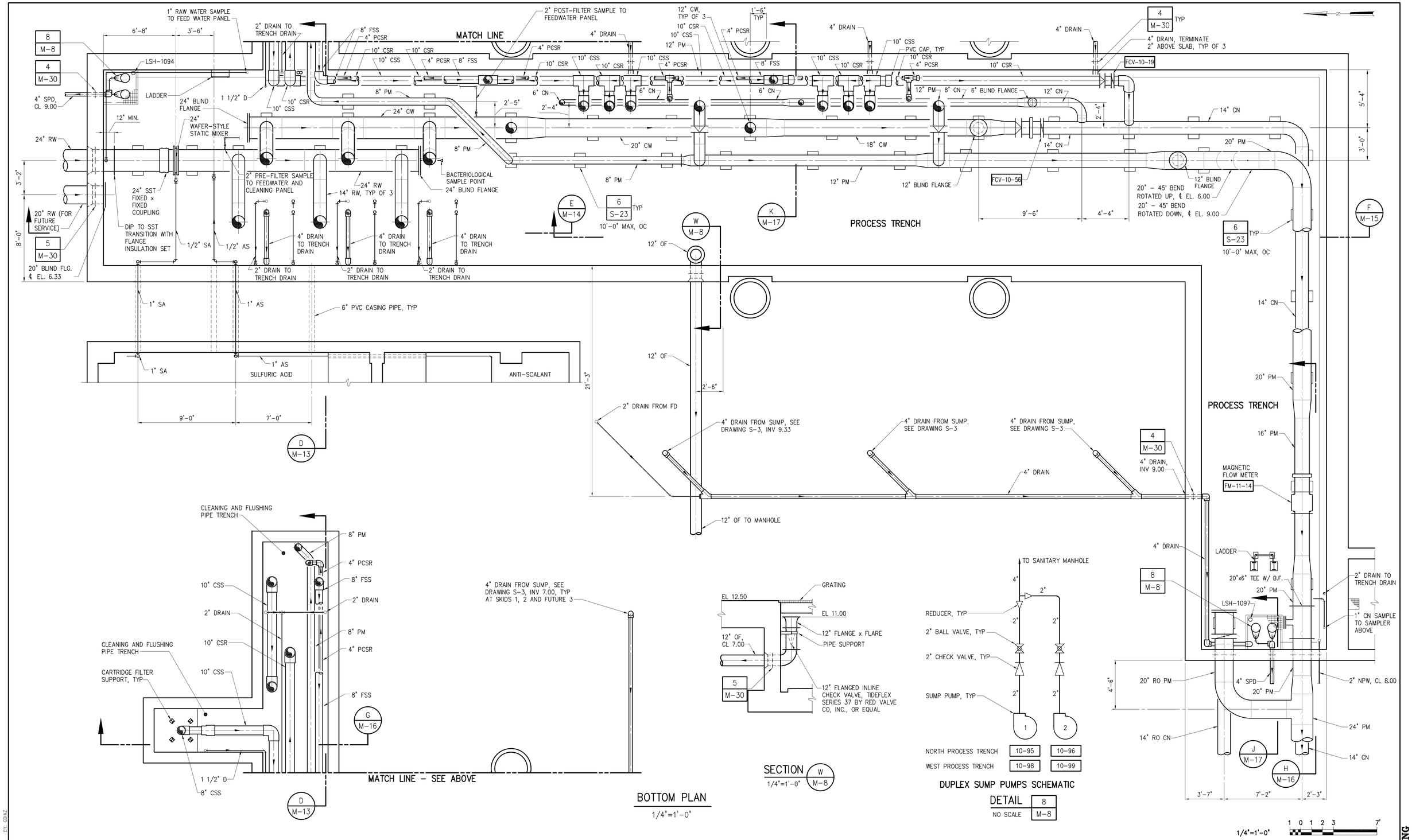

NO.	DATE	ISSUED FOR	BY
4	01/08	RECORD DRAWING	P.A.D.
3	04/06/06	DELETE RAW WATER SIDESTREAM ACID INJECTION	P.A.D.
2	10/21/05	TRENCH MODIFICATION	P.A.D.
1	10/03	BID SET	P.A.D.

DESIGNED D.M.L.
DRAWN W.D.R.
CHECKED P.A.D.
PROJ. ENGR. P.A.D.

PATRICK A. DAVIS P.E.
No. 37167

HAZEN AND SAWYER
Environmental Engineers & Scientists
4000 Hollywood Boulevard, Suite 750N
Hollywood, Florida 33021
Certificate of Authorization Number: 2771

SCALE 1/4"=1'-0"

CONTRACT: –
CLIENTS PROJECT:
ENGINEERS PROJECT: 40406
CAD REFERENCE: 40406M08

CITY OF HALLANDALE BEACH
UTILITIES DEPARTMENT

6 MGD MEMBRANE SOFTENING W.T.P.

NF PROCESS BUILDING
BOTTOM PLAN AND DETAIL

DATE: JANUARY 2008
SHEET: 18 OF 162
DRAWING: M-8

RECORD DRAWING

PLOT DATE: 2/27/2008 11:10 AM BY: GDIAZ

XREFs= O:\40406\40406-001\Submittals\Record-Drawings01-31-08\dwgs\200\PT-PB-MB,O:\40406\40406-001\Submittals\Record-Drawings01-31-08\dwgs\200\PT-PB-SB,O:\40406\40406-001\Submittals\Record-Drawings01-31-08\dwgs\200\PT-M-DA,O:\40406\40406-001\Submittals\Record-Drawings01-31-08\dwgs\200\PT-M-S12

File = O:\40406\40406-001\Submittals\Record-Drawings01-31-08\dwgs\MECH\40406M08 Saved by gdiaz Save date = 1/30/2008 2:08 PM

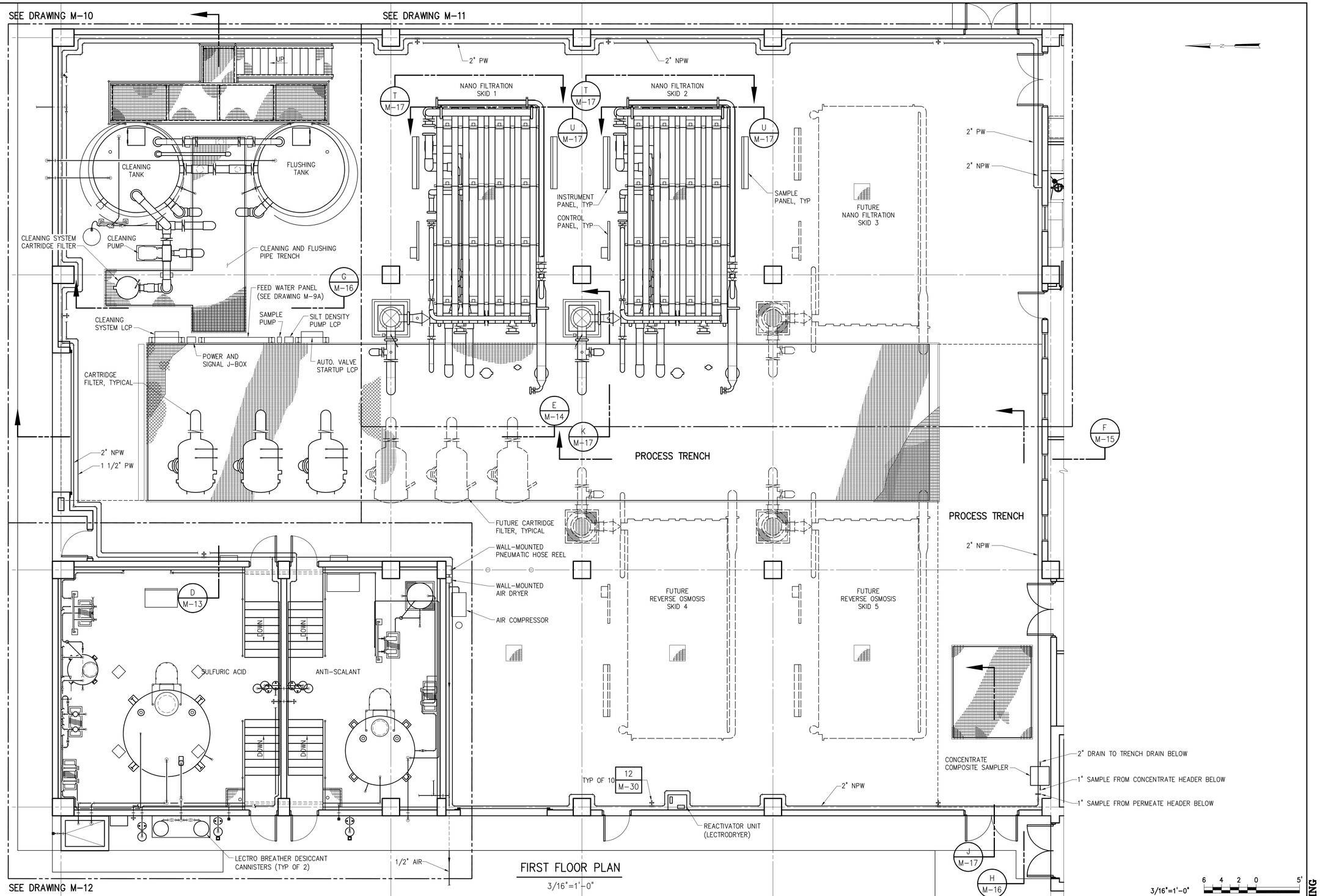

FIRST FLOOR PLAN

3/16"=1'-0"

NO.	DATE	ISSUED FOR	BY
4	01/08	RECORD DRAWING	P.A.D.
3	04/06/06	DELETE RAW WATER SIDESTREAM ACID INJECTION	P.A.D.
2	10/21/05	TRENCH MODIFICATION	P.A.D.
1	10/03	BID SET	P.A.D.

DESIGNED D.M.L.
DRAWN W.D.R.
CHECKED P.A.D.
PROJ. ENGR. P.A.D.

PATRICK A. DAVIS P.E.
No. 37167

HAZEN AND SAWYER
Environmental Engineers & Scientists
4000 Hollywood Boulevard, Suite 750N
Hollywood, Florida 33021
Certificate of Authorization Number: 2771

SCALE 3/16"=1'-0"

CONTRACT: –
CLIENTS PROJECT:
ENGINEERS PROJECT: 40406
CAD REFERENCE: 40406M09

CITY OF HALLANDALE BEACH
UTILITIES DEPARTMENT

6 MGD MEMBRANE SOFTENING W.T.P.

NF PROCESS BUILDING
FIRST FLOOR PLAN

DATE: JANUARY 2008
SHEET: 19 OF 162
DRAWING: M-9

RECORD DRAWING

PLOT DATE: 2/11/2008 9:58 AM BY:
MEDINA

XREFs= ..\200\PT-P1-MB,..\200\PT-P1-AB,..\200\PT-P1-SB

File = O:\40406\40406-001\Drawings\MECH\40406M09 Saved by TBOCAS Save date = 1/31/2008 3:08 PM

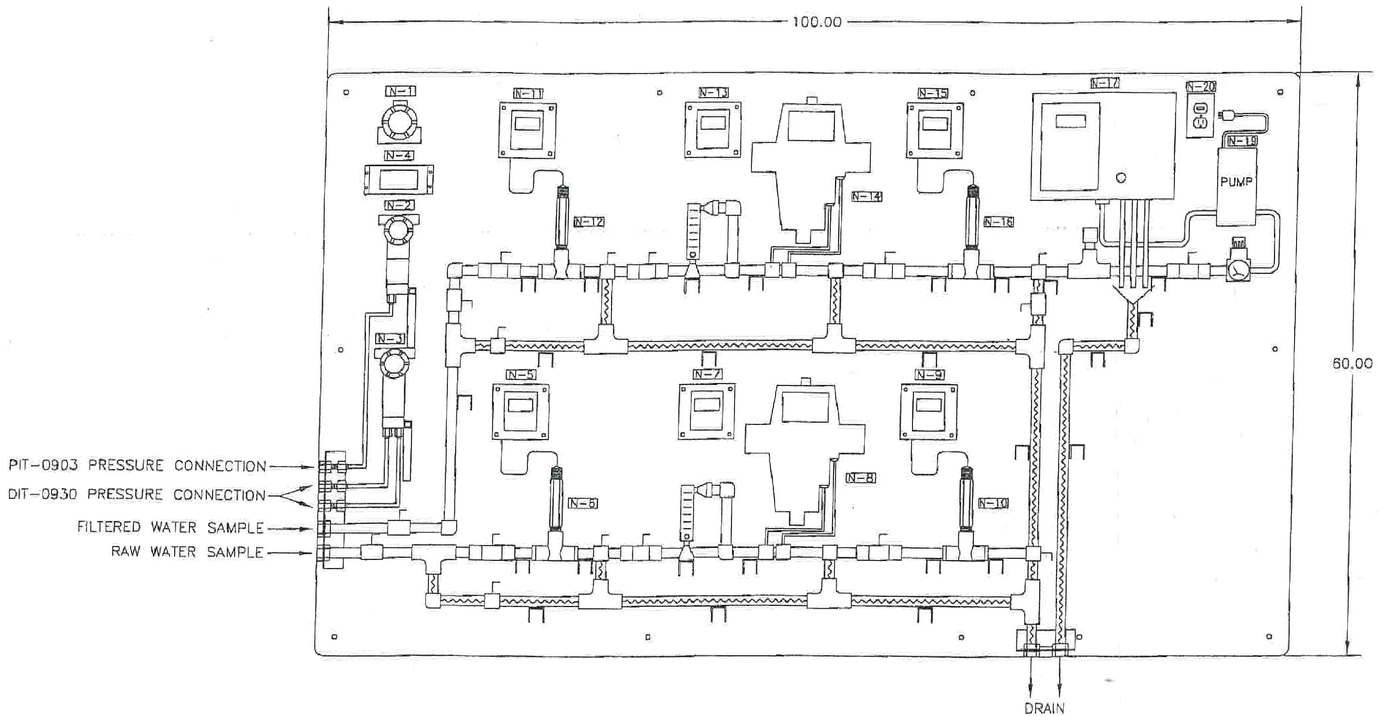

FEED WATER PANEL

WALL MOUNT 316SS PLATE
60"H X 100"W
12 GAUGE, BRUSHED FINISH

NAMEPLATE LEGEND

TAG ID No.	DESCRIPTION	QTY.	TAG SIZE	TAG ID.
N-1	RAW WATER TEMP	1	1"H x 3"W	TIT-0902
N-2	RAW WATER PRESSURE	1	1"H x 3"W	PIT-0903
N-3	CARTRIDGE DIFFERENTIAL PRESSURE	1	1"H x 3"W	PDIT-0930
N-4	RAW WATER FLOW	1	1"H x 3"W	FI-0900
N-5	RAW WATER pH	1	1"H x 3"W	AIT-0932
N-6	RAW WATER pH	1	1"H x 3"W	AE-0932
N-7	RAW WATER TURBIDITY	1	1"H x 3"W	AIT-0933
N-8	RAW WATER TURBIDITY	1	1"H x 3"W	AE-0933
N-9	RAW WATER ORP	1	1"H x 3"W	AIT-0934
N-10	RAW WATER ORP	1	1"H x 3"W	AE-0934
N-11	FILTERED WATER CONDUCTIVITY	1	1"H x 3"W	AIT-0935
N-12	FILTERED WATER CONDUCTIVITY	1	1"H x 3"W	AE-0935
N-13	FILTERED WATER TURBIDITY	1	1"H x 3"W	AIT-0936
N-14	FILTERED WATER TURBIDITY	1	1"H x 3"W	AE-0936
N-15	FILTERED WATER pH	1	1"H x 3"W	AIT-0937
N-16	FILTERED WATER pH	1	1"H x 3"W	AE-0937
N-17	FILTERED WATER SDI	1	1"H x 3"W	AE/AIT-0938
N-18	FEED WATER PANEL	1	2"H x 6"W	
N-19	FILTERED WATER SDI SAMPLE PUMP	1	1"H x 3"W	P-0938
N-20	SAMPLE PUMP POWER	1	1"H x 3"W	1114RECP

NOTE: NAMEPLATES ARE BLACK W/ WHITE LETTERS AND ATTACHED WITH ADHESIVE BACKING.

REVISIONS NO.	DATE	ISSUED FOR	BY
4	01/08	RECORD DRAWING	P.A.D.
3	04/06/06	DELETE RAW WATER SIDESTREAM ACID INJECTION	P.A.D.
2	10/21/05	TRENCH MODIFICATION	P.A.D.
1	10/03	BID SET	P.A.D.

DESIGNED D.M.L.
DRAWN W.D.R.
CHECKED P.A.D.
PROJ. ENGR. P.A.D.

PATRICK A. DAVIS P.E.
No. 37167

HAZEN AND SAWYER
Environmental Engineers & Scientists
4000 Hollywood Boulevard, Suite 750N
Hollywood, Florida 33021
Certificate of Authorization Number: 2771

SCALE NONE

CONTRACT: –
CLIENTS PROJECT:
ENGINEERS PROJECT: 40406
CAD REFERENCE: 40406M09

CITY OF HALLANDALE BEACH
UTILITIES DEPARTMENT

6 MGD MEMBRANE SOFTENING W.T.P.

NF PROCESS BUILDING
FIRST FLOOR PLAN

DATE: JANUARY 2008
SHEET: 19 OF 162
DRAWING: M-9A

RECORD DRAWING

PLOT DATE: 2/11/2008 8:48 AM BY:
XREFs=
File = O:\40406\40406-001\Drawings\MECH\40406M09A Saved by TBOCAS Save date = 1/30/2008 5:08 PM

NOTES:

1 PROVIDE 8-INCH 3ø, 480v IMMERSION HEATER AS MANUFACTURED BY CHROMALOX, OR EQUAL. THE SHEATH MATERIAL SHALL BE CONSTRUCTED OF 316 STAINLESS STEEL.

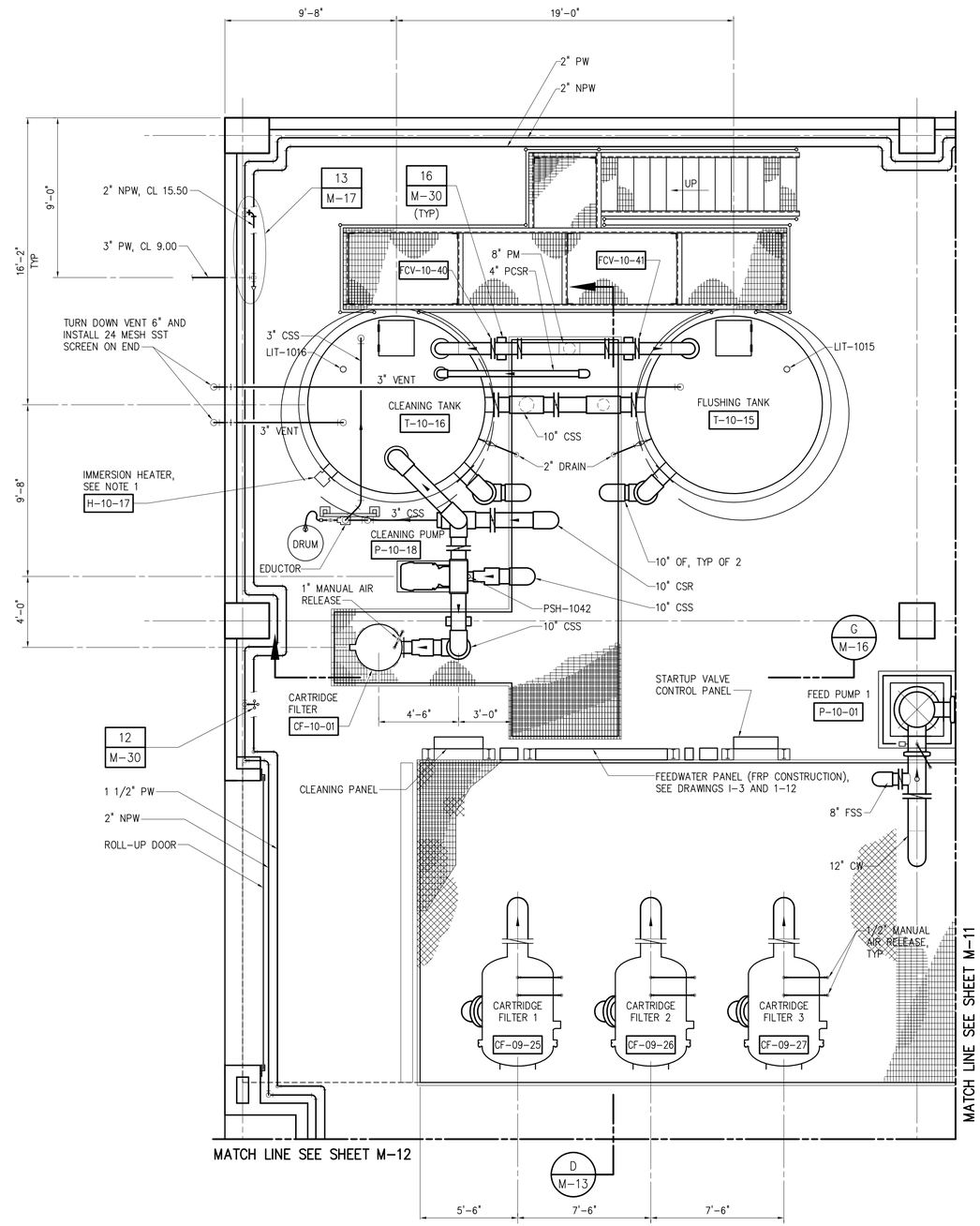

PARTIAL PLAN

1/4"=1'-0"

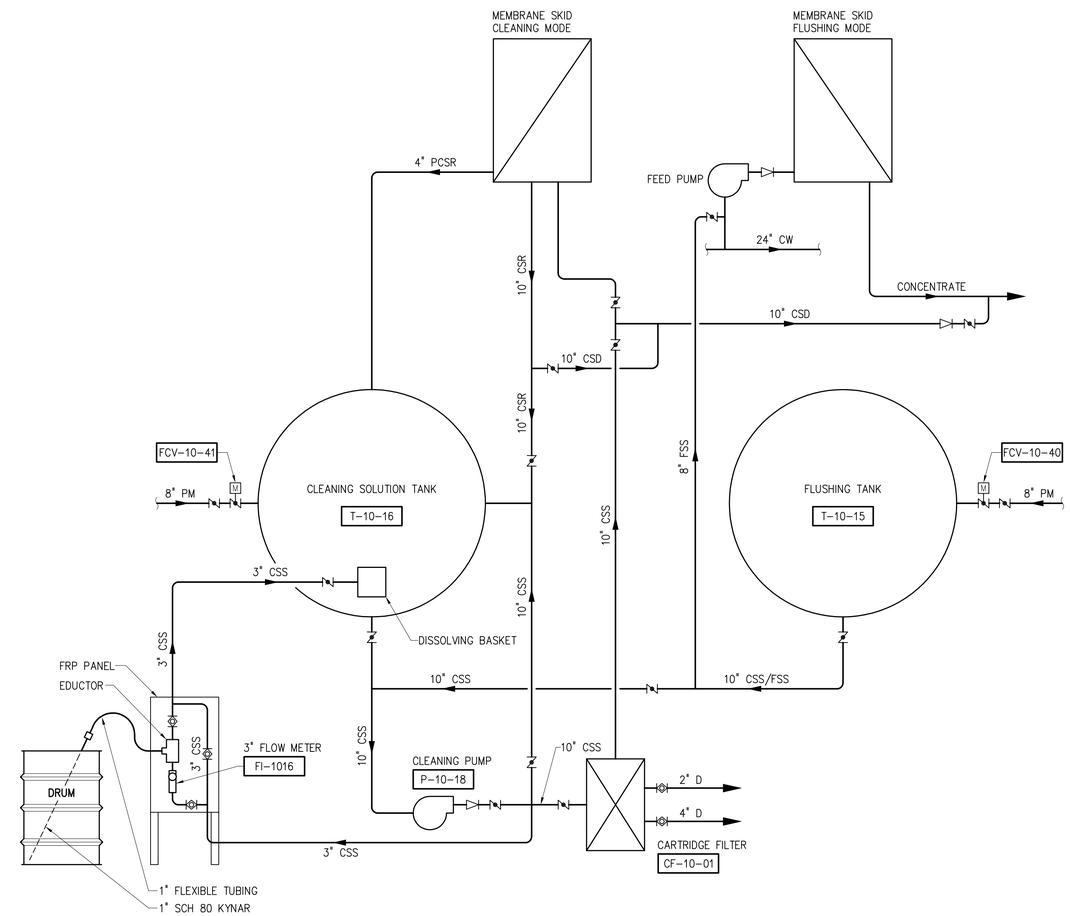

FLUSHING AND CLEANING SYSTEM SCHEMATIC

1/4"=1'-0"

1 0 1 2 3 7'

NO.	DATE	ISSUED FOR	BY
4	01/08	RECORD DRAWING	P.A.D.
3	10/21/05	TRENCH MODIFICATION	P.A.D.
2	07/04	ADDENDUM No. 2	P.A.D.
1	04/04	BID SET	P.A.D.

DESIGNED D.M.L.
DRAWN W.D.R.
CHECKED P.A.D.
PROJ. ENGR. P.A.D.

PATRICK A. DAVIS P.E.
No. 37167

HAZEN AND SAWYER
Environmental Engineers & Scientists
4000 Hollywood Boulevard, Suite 750N
Hollywood, Florida 33021
Certificate of Authorization Number: 2771

SCALE: AS SHOWN

CONTRACT: –
CLIENTS PROJECT:
ENGINEERS PROJECT: 40406
CAD REFERENCE: 40406M10

CITY OF HALLANDALE BEACH
UTILITIES DEPARTMENT

6 MGD MEMBRANE SOFTENING W.T.P.

NF PROCESS BUILDING
PARTIAL PLAN AND SCHEMATIC

DATE: JANUARY 2008
SHEET: 20 OF 162
DRAWING: M-10

RECORD DRAWING

PLOT DATE: 2/11/2008 9:58 AM BY: AMEDINA

XREFs= ..\200\PT-P1-AB,..\200\PT-P1-MB,..\200\PT-P1-SB,..\200\CF-SC-EM

File = O:\40406\40406-001\Drawings\MECH\40406M10 Saved by GDIAZ Save date = 1/30/2008 2:13 PM

NOTES:
1 SEE DETAIL 9/M-16 FOR DETAILS OF TYPICAL NANO FILTRATION SKID AND FEED PUMP.

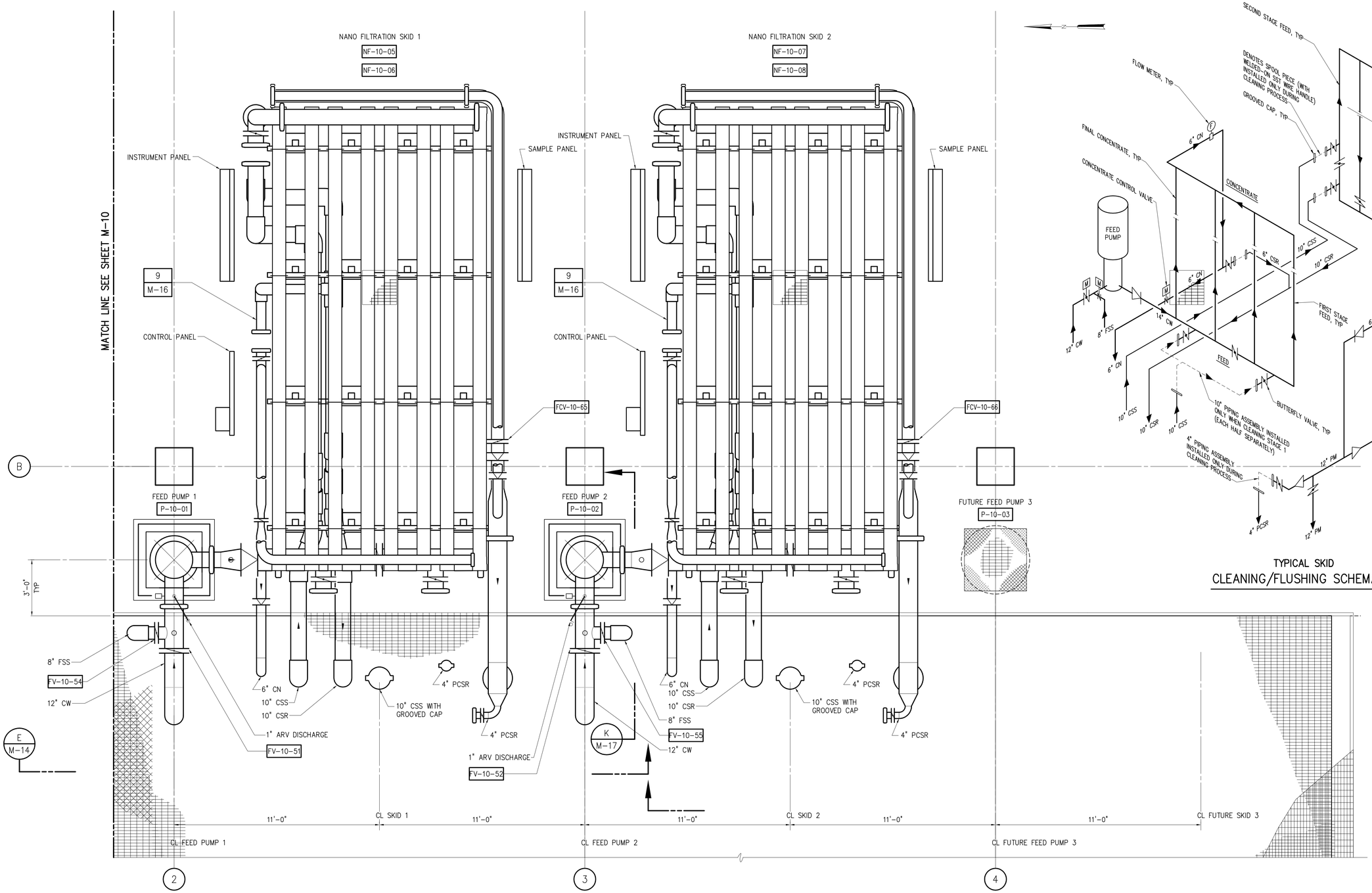

PARTIAL PLAN

3/8"=1'-0"

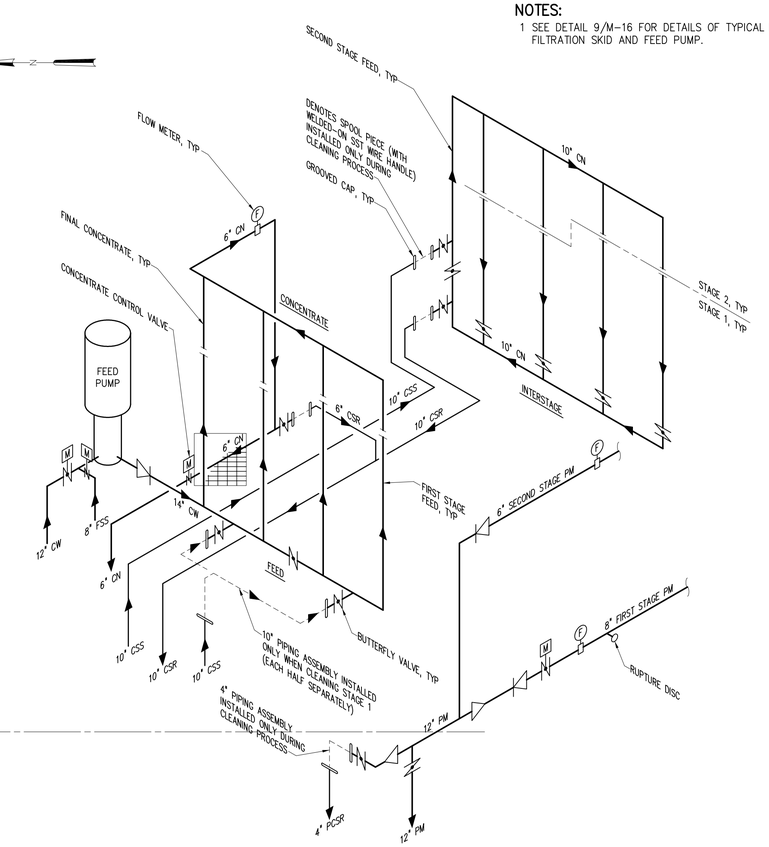

TYPICAL SKID
CLEANING/FLUSHING SCHEMATIC

3/8"=1'-0"

NO.	DATE	ISSUED FOR	BY
3	01/08	RECORD DRAWING	P.A.D.
2	10/21/05	TRENCH MODIFICATION	P.A.D.
1	10/03	BID SET	P.A.D.

DESIGNED D.M.L.
DRAWN W.D.R.
CHECKED P.A.D.
PROJ. ENGR. P.A.D.

PATRICK A. DAVIS P.E.
No. 37167

HAZEN AND SAWYER
Environmental Engineers & Scientists
4000 Hollywood Boulevard, Suite 750N
Hollywood, Florida 33021
Certificate of Authorization Number: 2771

SCALE 3/8"=1'-0"

CONTRACT: –
CLIENTS PROJECT:
ENGINEERS PROJECT: 40406
CAD REFERENCE: 40406M11

CITY OF HALLANDALE BEACH
UTILITIES DEPARTMENT

6 MGD MEMBRANE SOFTENING W.T.P.

NF PROCESS BUILDING
PARTIAL PLAN AND SCHEMATIC

DATE: JANUARY 2008
SHEET: 21 OF 162
DRAWING: M-11

RECORD DRAWING

PLOT DATE: 2/11/2008 8:58 AM BY: AMEDINA

XREFs= ..\200\PT-P1-AB,..\200\PT-P1-MB,..\200\PT-P1-SB,..\200\CF-SC-FM

File = O:\40406\40406-001\Drawings\MECH\40406M11 Saved by GDIAZ Save date = 1/30/2008 2:14 PM

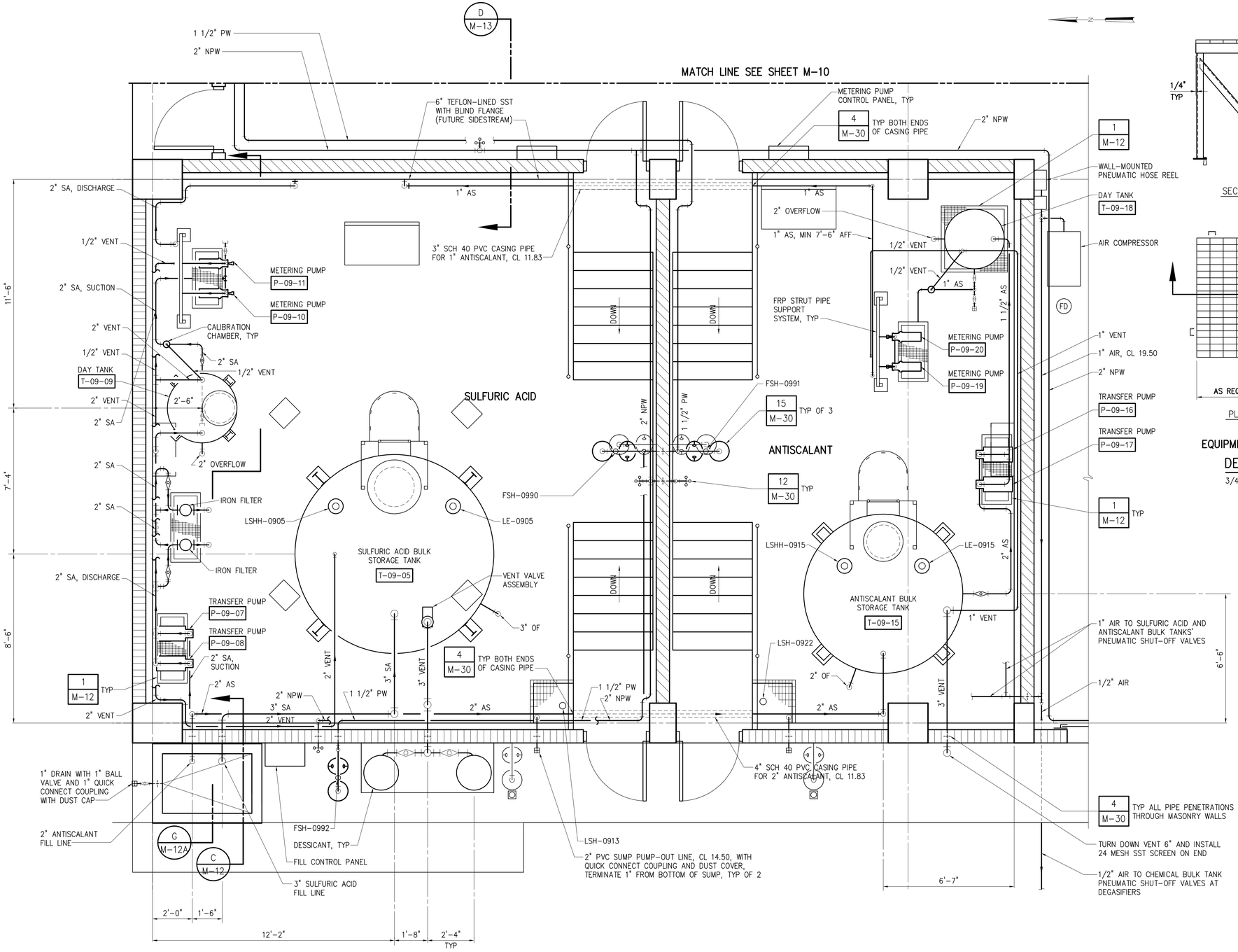

PARTIAL PLAN

3/8"=1'-0"

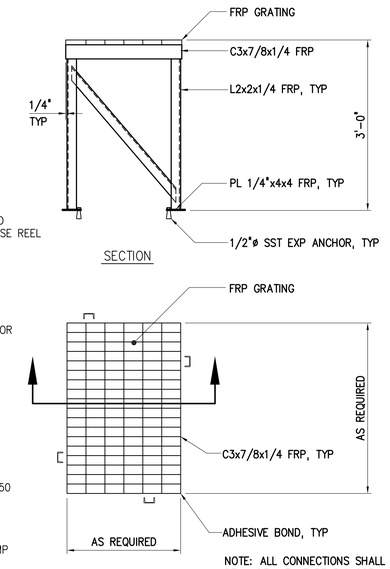

NOTE: ALL CONNECTIONS SHALL BE MADE WITH TYPE 316 SST BOLTS AND NUTS

EQUIPMENT TABLE

DETAIL 1 / M-12

3/4"=1'-0"

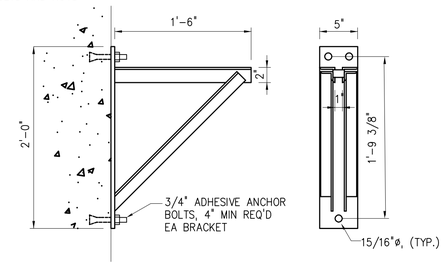

FRP PIPE SUPPORT

DETAIL 2 / M-12

N.T.S.

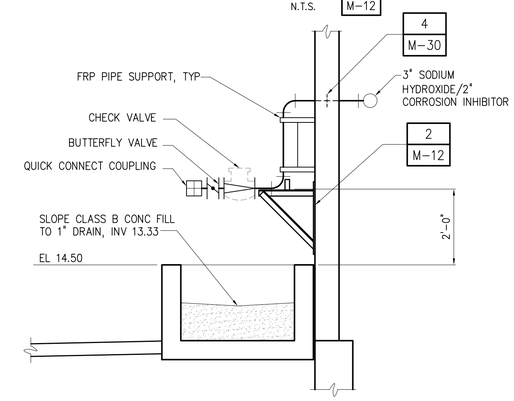

SECTION C / M-12

1/2"=1'-0"

3/8"=1'-0"

12" 0 1 2 4'

NOTES:

1. SEE SULFURIC ACID FEED SYSTEM SCHEMATIC, DRAWING M-23, FOR EQUIPMENT AND PIPING DETAILS.
2. SEE ANTISCALANT FEED SYSTEM SCHEMATIC, DRAWING M-24, FOR EQUIPMENT AND PIPING DETAILS.
3. PROVIDE 6" KYNAR-LINED SST SPOOL PIECE EQUAL IN LENGTH TO THE STATIC MIXER.
4. ALL CHEMICAL SOLUTION PIPING MOUNTED AT OR MORE THAN 5'-0" ABOVE FINISHED FLOOR SHALL BE DUAL CONTAINED PIPE.

NO.	DATE	ISSUED FOR	BY
2	01/08	RECORD DRAWING	P.A.D.
1	10/03	BID SET	P.A.D.

DESIGNED D.M.L.
DRAWN W.D.R.
CHECKED P.A.D.
PROJ. ENGR. P.A.D.

PATRICK A. DAVIS P.E.
No. 37167

HAZEN AND SAWYER
Environmental Engineers & Scientists
4000 Hollywood Boulevard, Suite 750N
Hollywood, Florida 33021
Certificate of Authorization Number: 2771

SCALE: AS SHOWN

CONTRACT: –
CLIENTS PROJECT:
ENGINEERS PROJECT: 40406
CAD REFERENCE: 40406M12

CITY OF HALLANDALE BEACH
UTILITIES DEPARTMENT

6 MGD MEMBRANE SOFTENING W.T.P.

NF PROCESS BUILDING
PARTIAL PLAN, SECTION AND DETAIL

DATE: JANUARY 2008
SHEET: 22 OF 162
DRAWING: M-12

RECORD DRAWING

PLOT DATE: 2/11/2008 9:59 AM BY: AMEDINA

XREFS= ..\200\PT-P1-SB,..\200\PT-P1-AB,..\200\PT-P1-MB,..\200\CF-M-DA,..\200\PT-M-S08

File = O:\40406\40406-001\Drawings\MECH\40406M12 Saved by GDIAZ Save date = 2/4/2008 2:46 PM

NOTES:

1 ALL PIPING ELEVATION WILL BE BASE ON DESIGN CRITERIA.

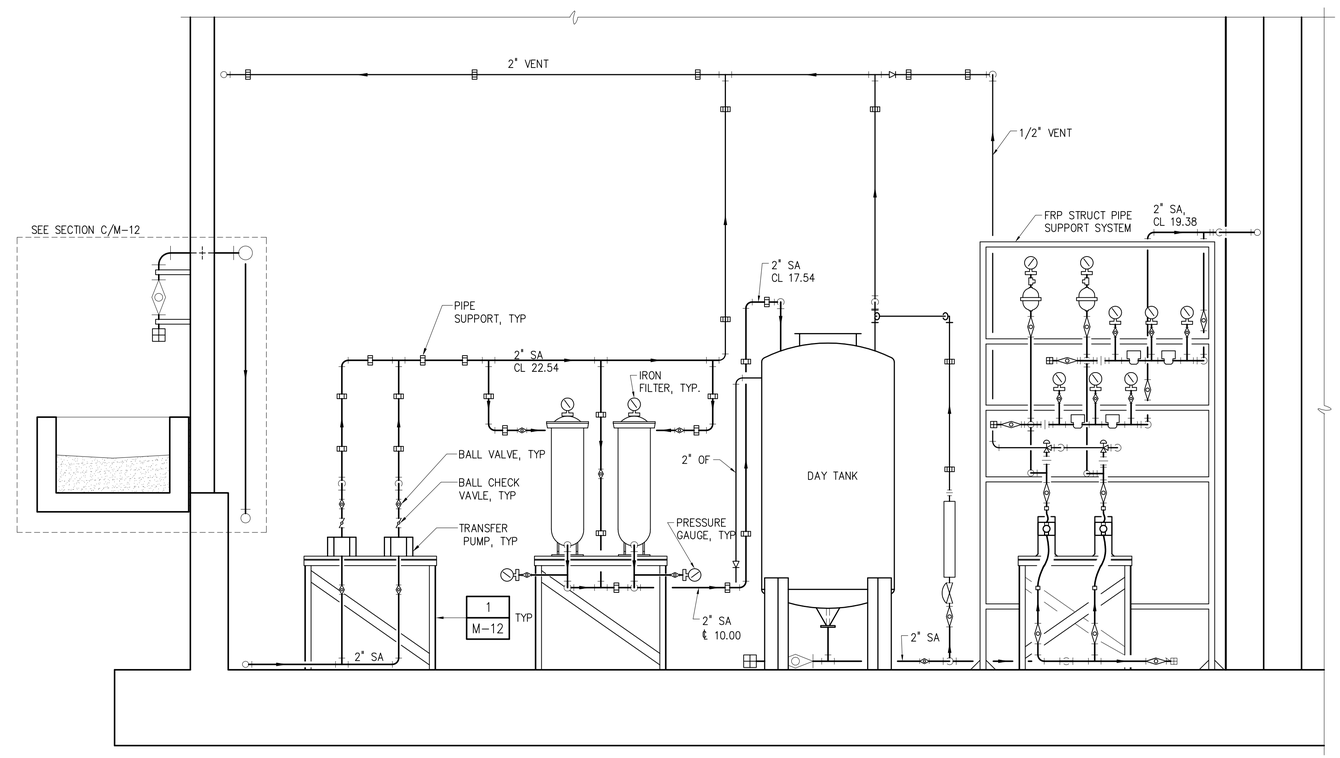

SULFURIC ACID FEED SYSTEM

SECTION G / M-12

1/2"=1'-0"

NO.	DATE	ISSUED FOR	BY
1	01/08	RECORD DRAWING	P.A.D.

DESIGNED D.M.L.
DRAWN H & S
CHECKED P.A.D.
PROJ. ENGR. P.A.D.

PATRICK A. DAVIS P.E.
No. 37167

HAZEN AND SAWYER
Environmental Engineers & Scientists
4000 Hollywood Boulevard, Suite 750N
Hollywood, Florida 33021
Certificate of Authorization Number: 2771

SCALE: AS SHOWN

CONTRACT: –
CLIENTS PROJECT:
ENGINEERS PROJECT: 40406
CAD REFERENCE: 40406M18A

CITY OF HALLANDALE BEACH
UTILITIES DEPARTMENT

6 MGD MEMBRANE SOFTENING W.T.P.

NF PROCESS BUILDING
SECTION

DATE: JANUARY 2008
SHEET: – OF –
DRAWING: M-12A

RECORD DRAWING

PLOT DATE: 2/11/2008 9:59 AM BY: AMEDINA

XREFs= ..\200\PT-P1-S03,..\200\PT-P1-S02

File = G:\40406\40406-001\Drawings\MECH\40406M12A Saved by GDIAZ Save date = 1/31/2008 2:37 PM

NOTES:

1 ALL PIPING IN THE MAIN PIPE TRENCH NOT SUPPORTED BY CONCRETE CRADLES SHALL BE SUPPORTED WITH PIPE HANGERS ATTACHED TO W12 ALUMINUM BEAMS. CONTRACTOR SHALL PROVIDE HANGER SUPPORTS AT A MINIMUM OF EVERY OTHER W12 ALUMINUM BEAM FOR ALL PIPES REQUIRING SUPPORT. ALL PIPING IN THE CLEANING AND FLUSHING PIPE TRENCHES SHALL BE SUPPORTED BY AN FRP STRUT PIPE SUPPORT SYSTEM.

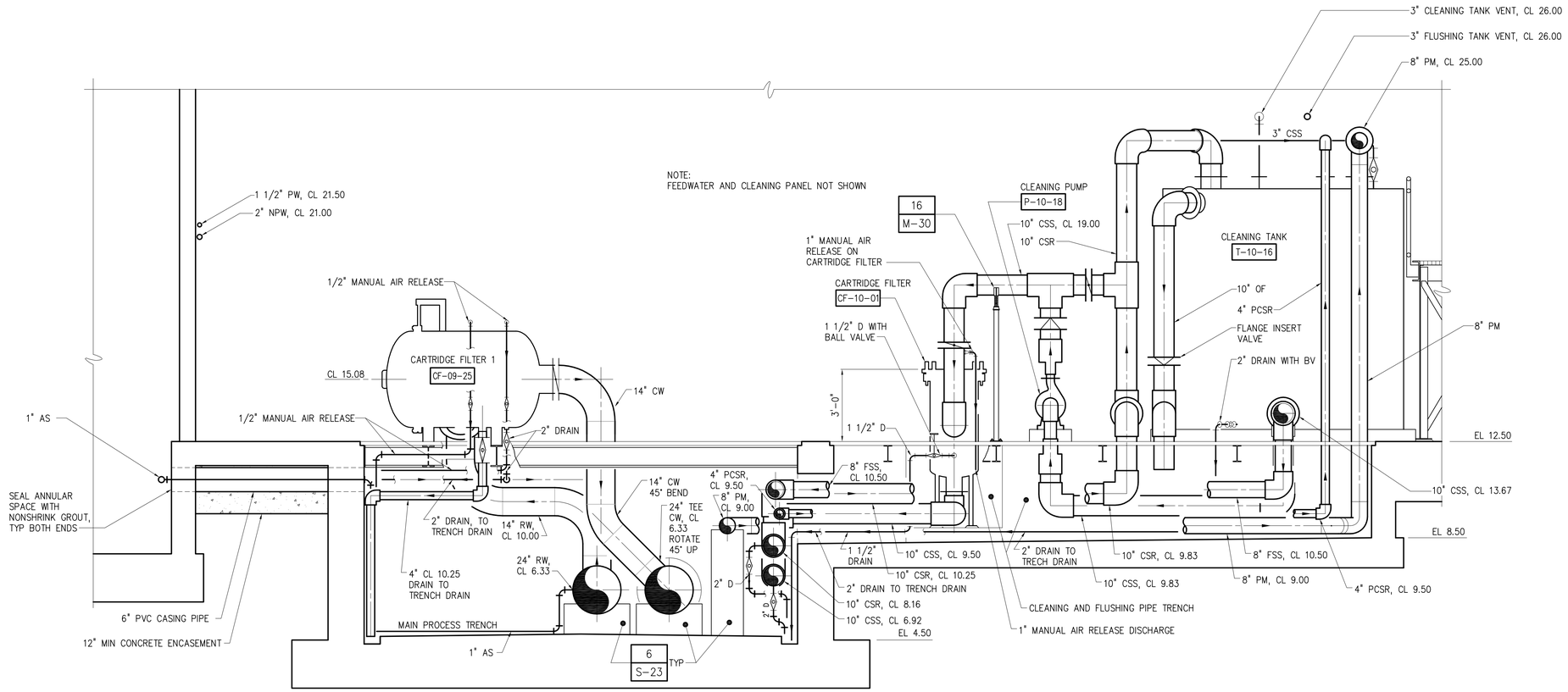

SECTION D / M-8
3/8"=1'-0"

3/8"=1'-0" 12" 0 1 2 4'

NO.	DATE	ISSUED FOR	BY
4	01/08	RECORD DRAWING	P.A.D.
3	04/06/06	DELETE RAW WATER SIDESTREAM ACID INJECTION	P.A.D.
2	10/21/05	TRENCH MODIFICATION	P.A.D.
1	04/04	BID SET	P.A.D.

DESIGNED D.M.L.
DRAWN W.D.R.
CHECKED P.A.D.
PROJ. ENGR. P.A.D.

PATRICK A. DAVIS P.E.
No. 37167

HAZEN AND SAWYER
Environmental Engineers & Scientists
4000 Hollywood Boulevard, Suite 750N
Hollywood, Florida 33021
Certificate of Authorization Number: 2771

SCALE 3/8"=1'-0"

CONTRACT: –
CLIENTS PROJECT:
ENGINEERS PROJECT: 40406
CAD REFERENCE: 40406M13

CITY OF HALLANDALE BEACH
UTILITIES DEPARTMENT

6 MGD MEMBRANE SOFTENING W.T.P.

NF PROCESS BUILDING
SECTION

DATE: JANUARY 2008
SHEET: 23 OF 162
DRAWING: M-13

RECORD DRAWING

PLOT DATE: 2/11/2008 9:59 AM BY: AMEDINA
XREFs= ..\200\PT-M-S01
File = O:\40406\40406-001\Drawings\MECH\40406M13 Saved by TBOCAS Save date = 1/30/2008 2:23 PM

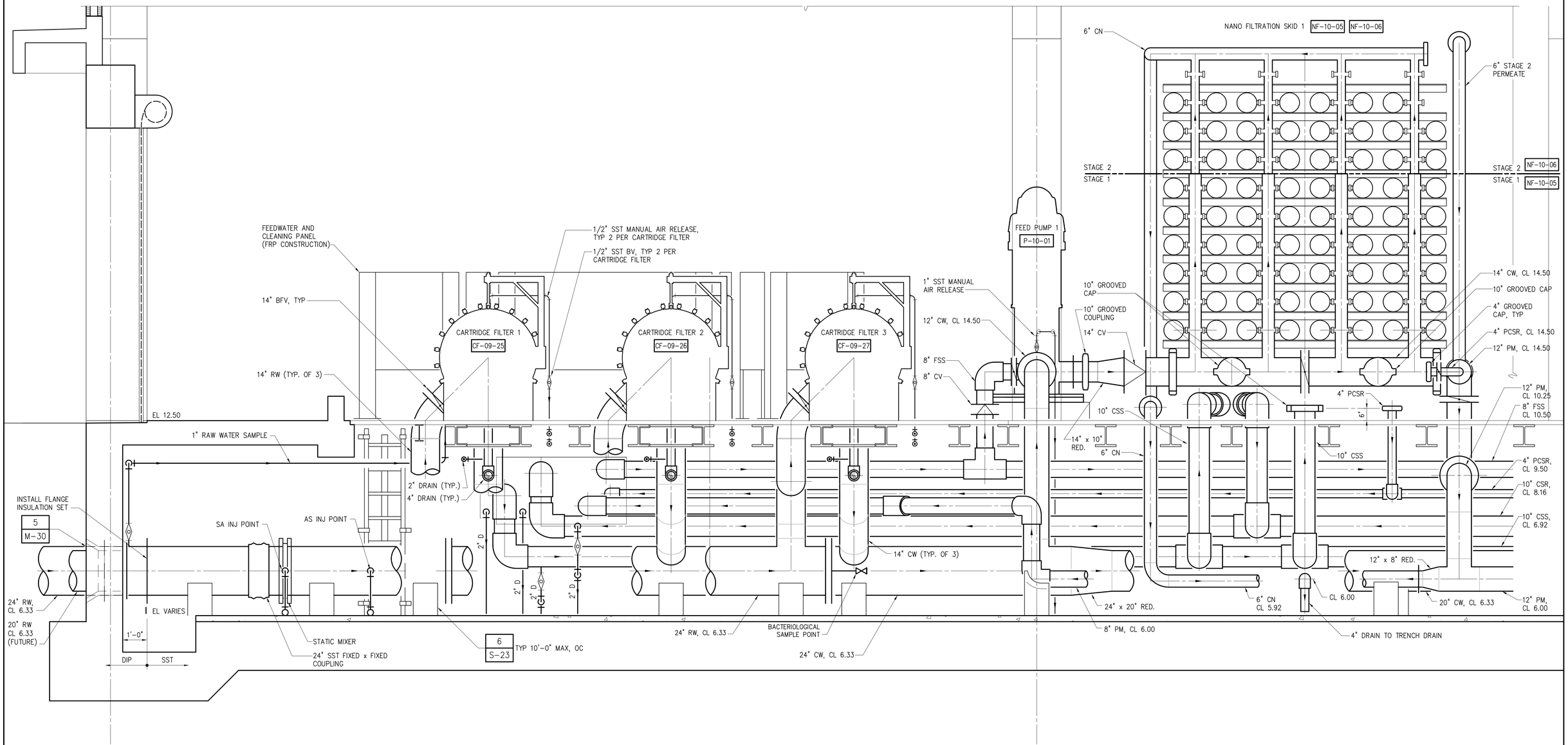

SECTION E / M-8
1/2"=1'-0"

1/2"=1'-0" 12" 0 1 3'

NO.	DATE	ISSUED FOR	BY
4	01/08	RECORD DRAWING	P.A.D.
3	04/06/06	DELETE RAW WATER SIDESTREAM ACID INJECTION	P.A.D.
2	10/21/05	TRENCH MODIFICATION	P.A.D.
1	04/04	BID SET	P.A.D.

DESIGNED D.M.L.
DRAWN W.D.R.
CHECKED P.A.D.
PROJ. ENGR. P.A.D.

PATRICK A. DAVIS P.E.
No. 37167

HAZEN AND SAWYER
Environmental Engineers & Scientists
4000 Hollywood Boulevard, Suite 750N
Hollywood, Florida 33021
Certificate of Authorization Number: 2771

SCALE 1/2"=1'-0"

CONTRACT: –
CLIENTS PROJECT:
ENGINEERS PROJECT: 40406
CAD REFERENCE: 40406M14

CITY OF HALLANDALE BEACH
UTILITIES DEPARTMENT

6 MGD MEMBRANE SOFTENING W.T.P.

NF PROCESS BUILDING
SECTION

DATE: JANUARY 2008
SHEET: 24 OF 162
DRAWING: M-14

RECORD DRAWING

PLOT DATE: 2/11/2008 8:59 AM BY: AMEDINA

XREFs= ..\200\PT-M-S03,..\200\PT-S01-S

File = O:\40406\40406-001\Drawings\MECH\40406M14 Saved by TBOCAS Save date = 1/30/2008 2:24 PM

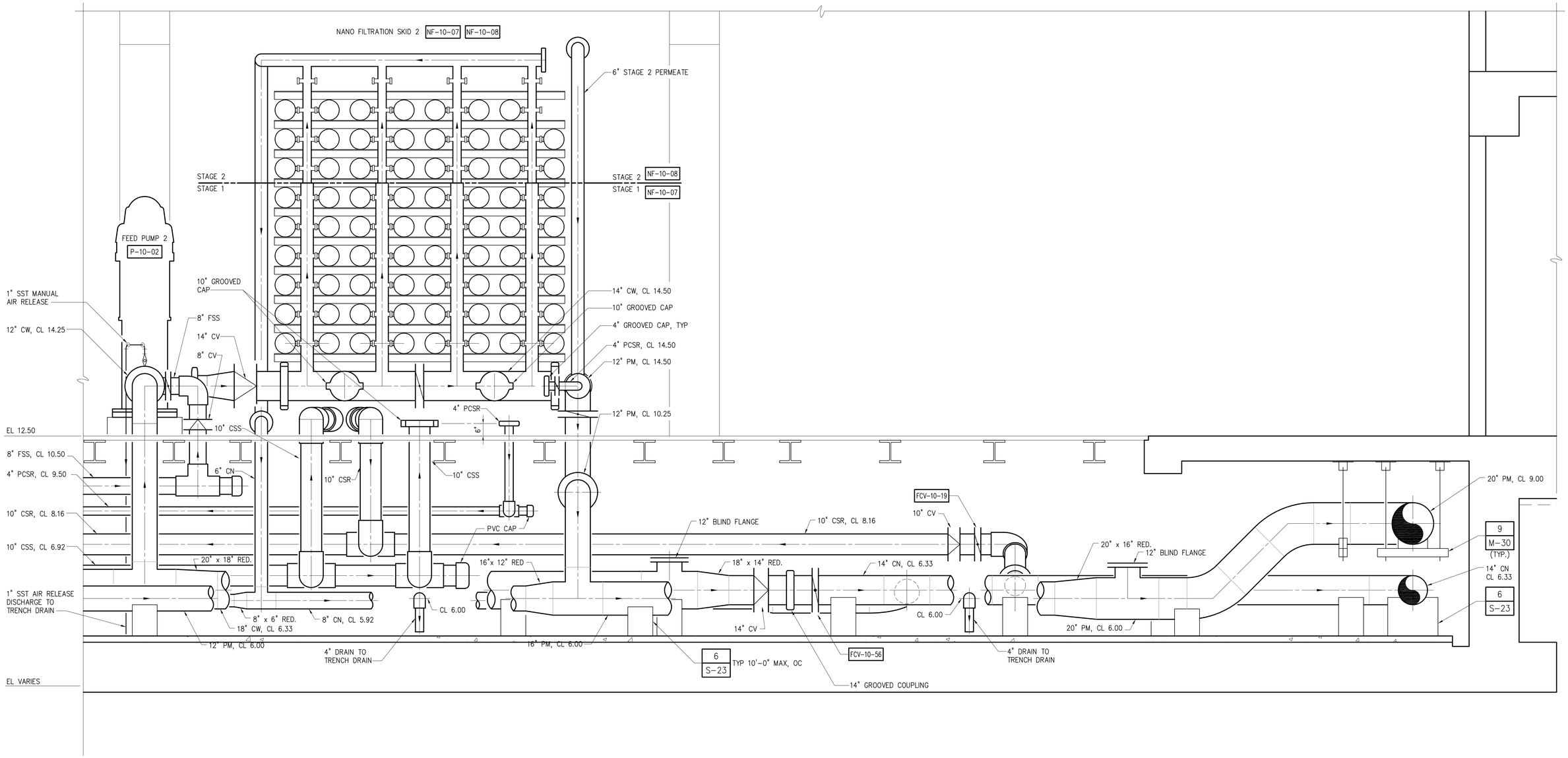

SECTION F / M-8
1/2"=1'-0"

1/2"=1'-0"

NO.	DATE	ISSUED FOR	BY
3	01/08	RECORD DRAWING	P.A.D.
2	10/21/05	TRENCH MODIFICATION	P.A.D.
1	10/03	BID SET	P.A.D.

DESIGNED D.M.L.
DRAWN W.D.R.
CHECKED P.A.D.
PROJ. ENGR. P.A.D.

PATRICK A. DAVIS P.E.
No. 37167

HAZEN AND SAWYER
Environmental Engineers & Scientists
4000 Hollywood Boulevard, Suite 750N
Hollywood, Florida 33021
Certificate of Authorization Number: 2771

SCALE 1/2"=1'-0"

CONTRACT: –
CLIENTS PROJECT:
ENGINEERS PROJECT: 40406
CAD REFERENCE: 40406M15

CITY OF HALLANDALE BEACH
UTILITIES DEPARTMENT

6 MGD MEMBRANE SOFTENING W.T.P.

NF PROCESS BUILDING
SECTION

DATE: JANUARY 2008
SHEET: 25 OF 162
DRAWING: M-15

RECORD DRAWING

PLOT DATE: 2/11/2008 9:59 AM BY: AMEDINA

XREFs= ..\200\PT-M-S05,..\200\PT-S01-S

File = O:\40406\40406-001\Drawings\MECH\40406M15 Saved by GDIAZ Save date = 1/30/2008 2:26 PM

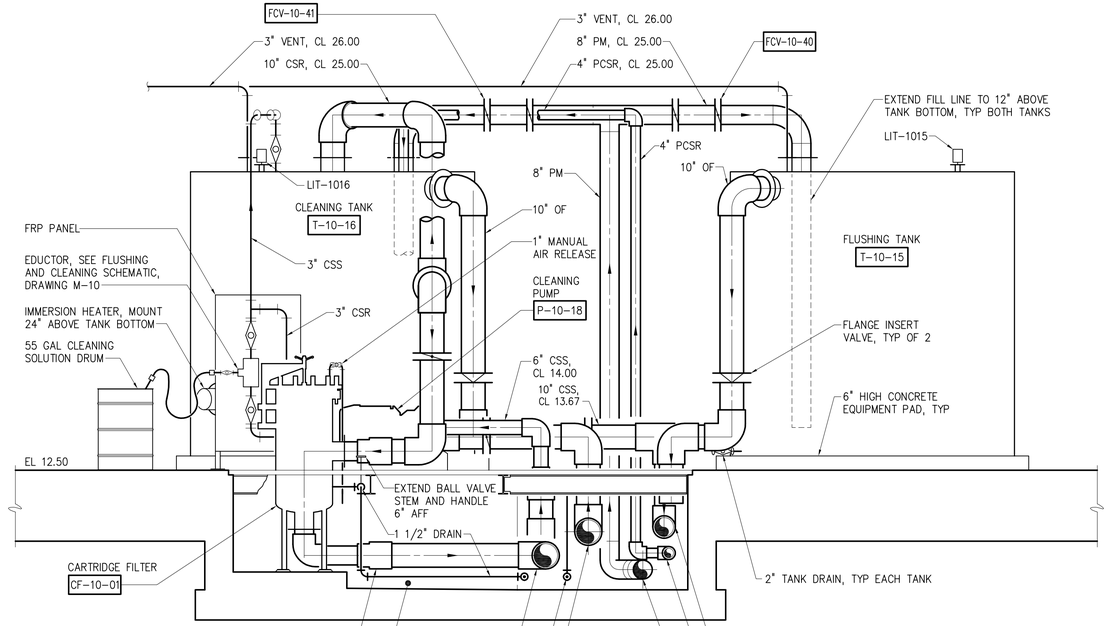

SECTION G / M-8
3/8"=1'-0"

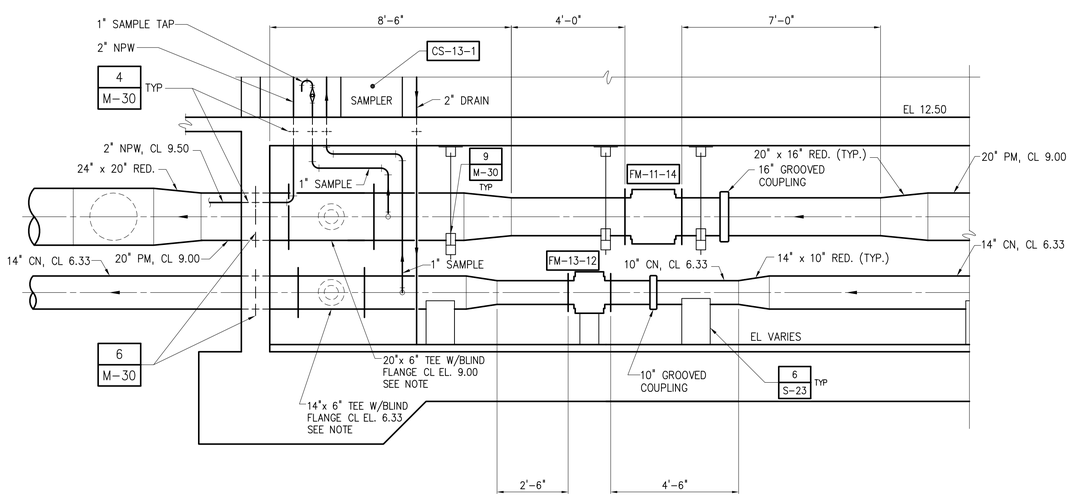

SECTION H / M-8
3/8"=1'-0"

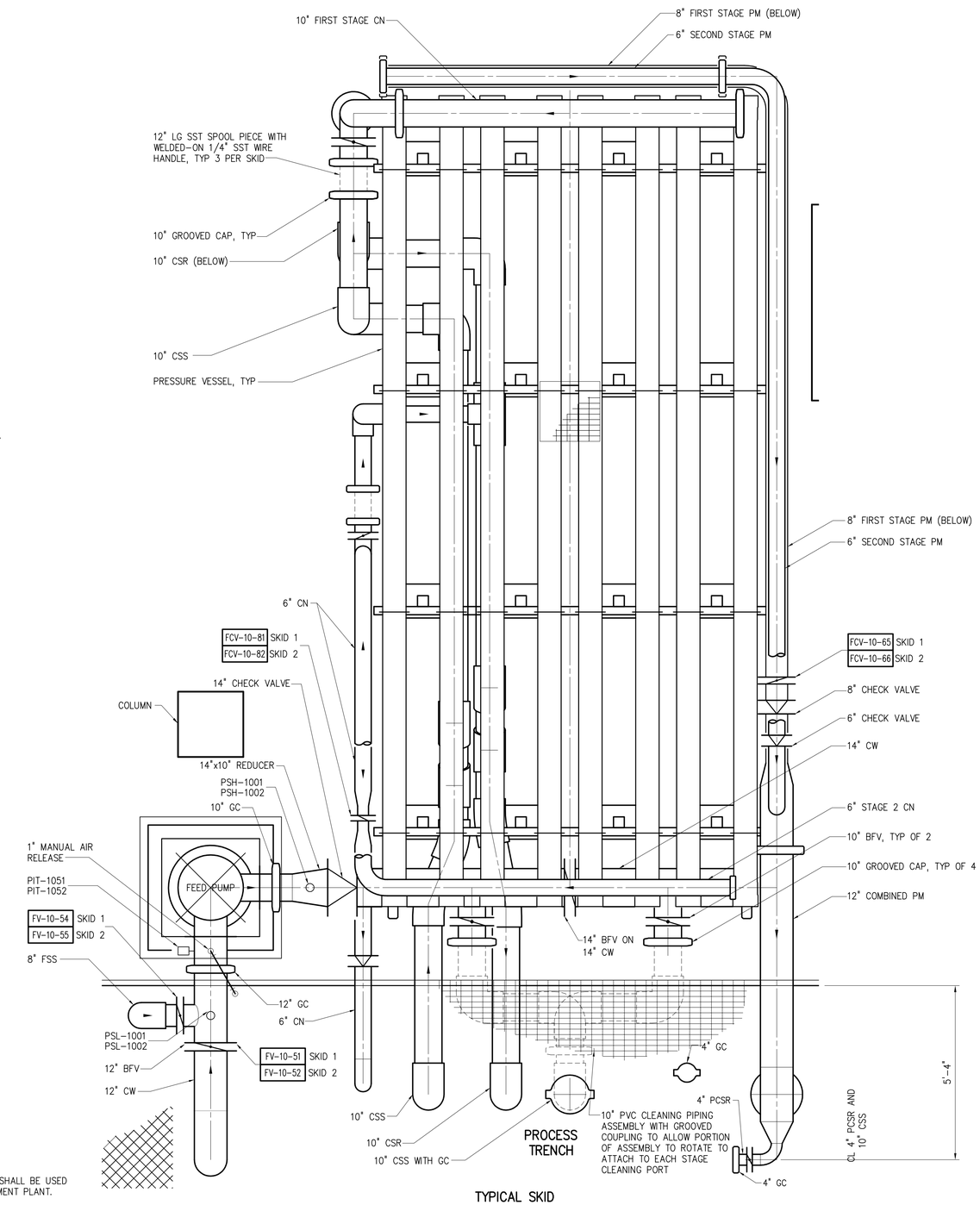

NOTE:
BLIND FLANGE CONNECTION SHALL BE USED DURING STARTUP OF TREATMENT PLANT.

TYPICAL SKID
DETAIL 9 / M-11
1/2"=1'-0"

1/2"=1'-0"
12" 0 1 3'

NO.	DATE	ISSUED FOR	BY
4	01/08	RECORD DRAWING	P.A.D.
3	10/21/05	TRENCH MODIFICATION	P.A.D.
2	04/04	ADDENDUM No. 2	P.A.D.
1	04/04	BID SET	P.A.D.

DESIGNED D.M.L.
DRAWN W.D.R.
CHECKED P.A.D.
PROJ. ENGR. P.A.D.

PATRICK A. DAVIS P.E.
No. 37167

HAZEN AND SAWYER
Environmental Engineers & Scientists
4000 Hollywood Boulevard, Suite 750N
Hollywood, Florida 33021
Certificate of Authorization Number: 2771

SCALE: AS SHOWN

CONTRACT: –
CLIENTS PROJECT:
ENGINEERS PROJECT: 40406
CAD REFERENCE: 40406M16

CITY OF HALLANDALE BEACH
UTILITIES DEPARTMENT

6 MGD MEMBRANE SOFTENING W.T.P.

NF PROCESS BUILDING
SECTIONS AND DETAIL

DATE: JANUARY 2008
SHEET: 26 OF 162
DRAWING: M-16

RECORD DRAWING

PLOT DATE: 2/11/2008 9:59 AM BY: AMEDINA

XREFs= ..\200\PT-M-S02,..\200\PT-M-S06,..\200\PT-P1-SB,..\200\PT-P1-AB,..\200\PT-P1-MB

File = G:\40406\40406-001\Drawings\MECH\40406M16 Saved by GDIAZ Save date = 1/30/2008 2:29 PM

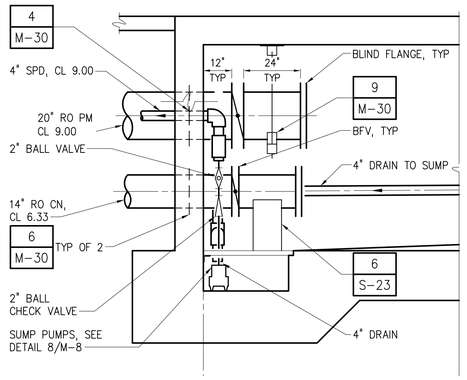

SECTION J M-8
1/2"=1'-0"

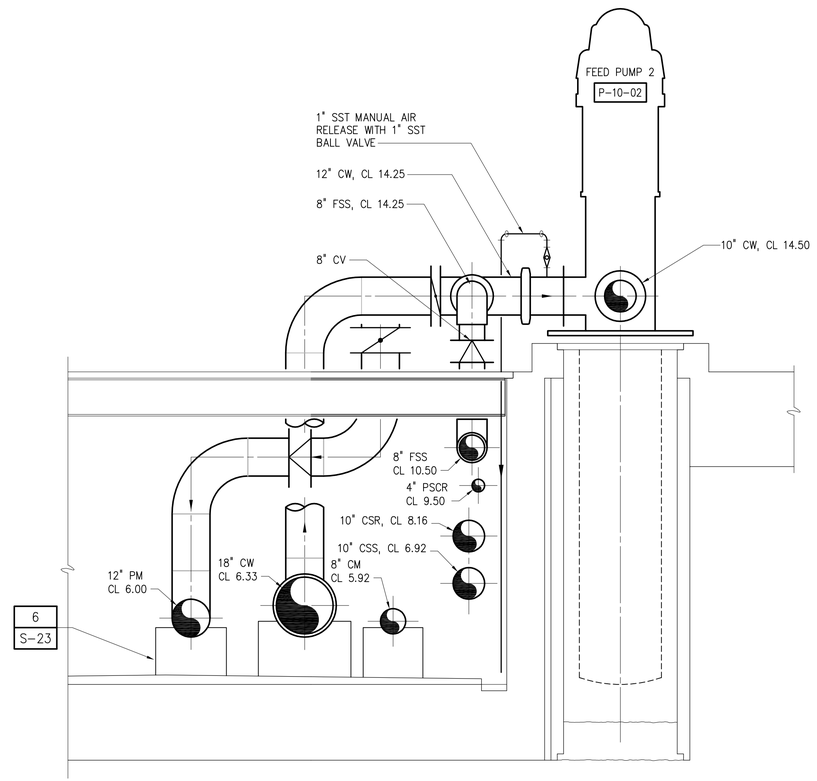

SECTION K M-8
1/2"=1'-0"

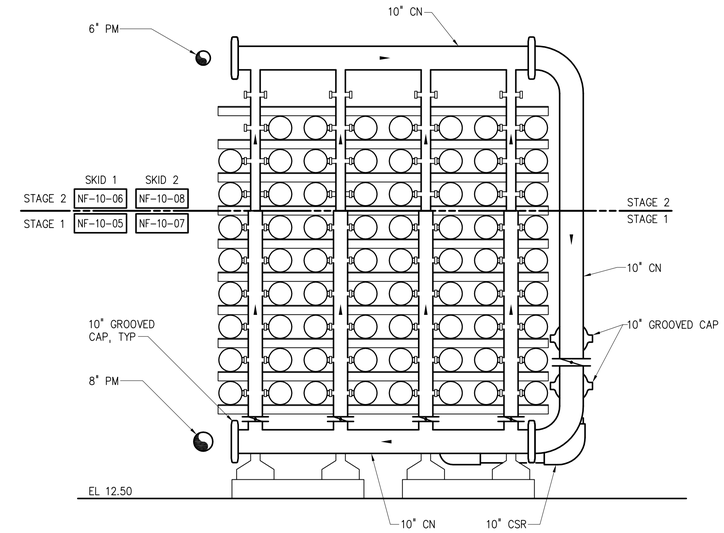

INTERSTAGE

SECTION T M-9
1/2"=1'-0"

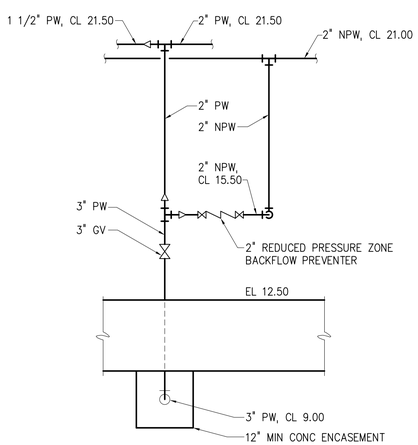

DETAIL 13 M-10
3/8"=1'-0"

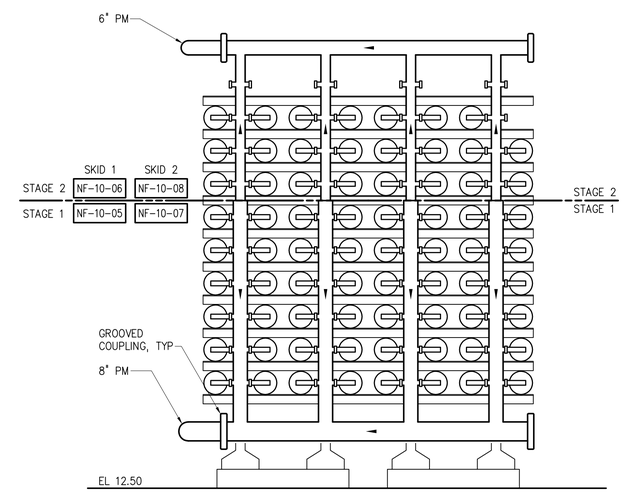

PERMEATE

SECTION U M-9
1/2"=1'-0"

1/2"=1'-0" 12" 0 1 3'

NO.	DATE	ISSUED FOR	BY
4	01/08	RECORD DRAWING	P.A.D.
3	10/21/05	TRENCH MODIFICATION	P.A.D.
2	07/04	ADDENDUM No. 2	P.A.D.
1	10/03	BID SET	P.A.D.

DESIGNED D.M.L.
DRAWN W.D.R.
CHECKED P.A.D.
PROJ. ENGR. P.A.D.

PATRICK A. DAVIS P.E.
No. 37167

HAZEN AND SAWYER
Environmental Engineers & Scientists
4000 Hollywood Boulevard, Suite 750N
Hollywood, Florida 33021
Certificate of Authorization Number: 2771

SCALE 1/2"=1'-0"

CONTRACT: –
CLIENTS PROJECT:
ENGINEERS PROJECT: 40406
CAD REFERENCE: 40406M17

CITY OF HALLANDALE BEACH
UTILITIES DEPARTMENT

6 MGD MEMBRANE SOFTENING W.T.P.

NF PROCESS BUILDING
SECTIONS AND DETAIL

DATE: JANUARY 2008
SHEET: 27 OF 162
DRAWING: M-17

RECORD DRAWING

PLOT DATE: 2/11/2008 9:59 AM BY: AMEDINA

XREFs= ..\200\PT-M-S04,..\200\PT-M-S09,..\200\PT-M-S10,..\200\PT-M-S11,..\200\PT-M-DC,..\200\PT-S16-S,..\200\PT-S14-S

File = O:\40406\40406-001\Drawings\MECH\40406M17 Saved by GDIAZ Save date = 1/30/2008 2:31 PM

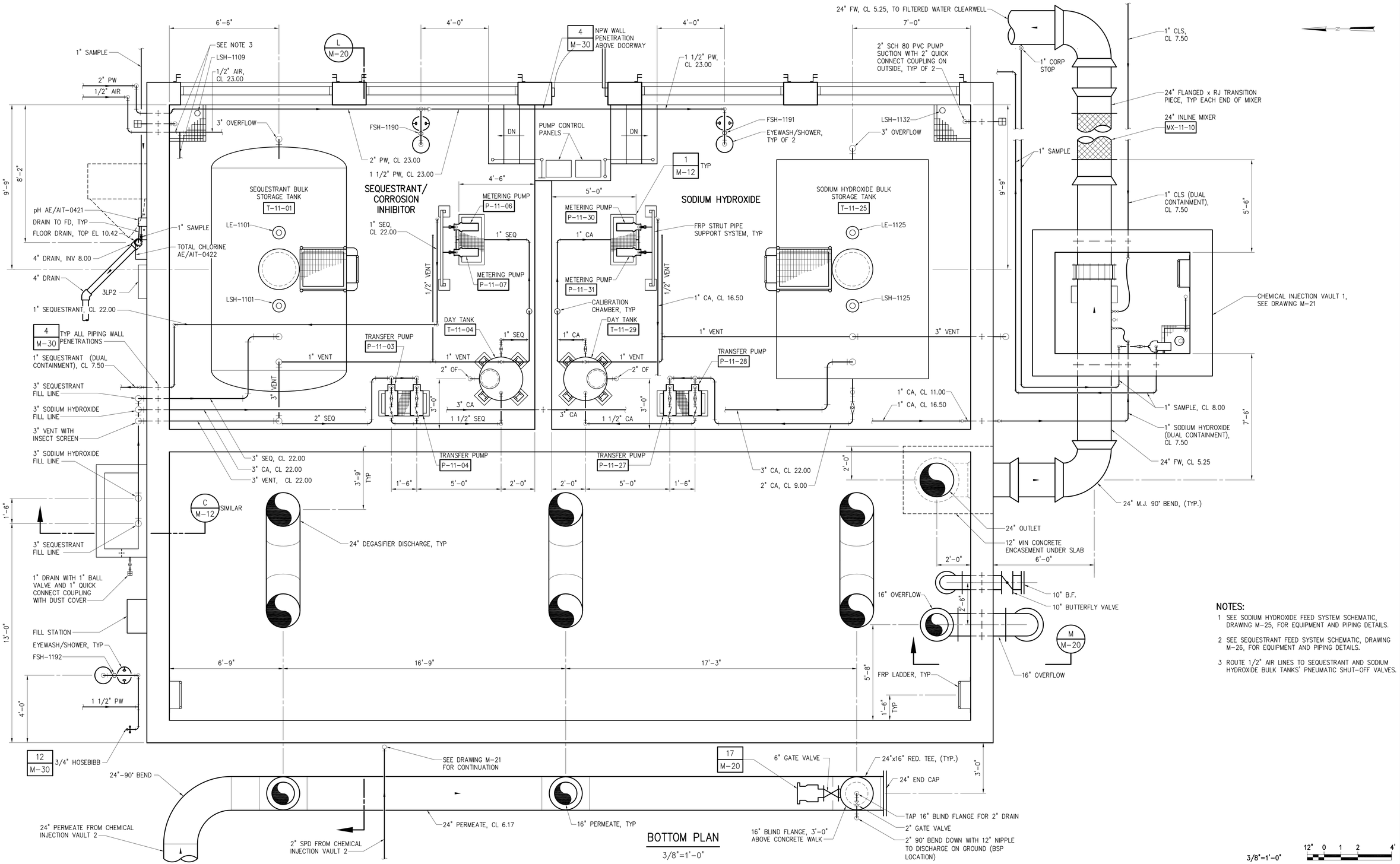

BOTTOM PLAN

3/8"=1'-0"

NOTES:

1. SEE SODIUM HYDROXIDE FEED SYSTEM SCHEMATIC, DRAWING M-25, FOR EQUIPMENT AND PIPING DETAILS.
2. SEE SEQUESTRANT FEED SYSTEM SCHEMATIC, DRAWING M-26, FOR EQUIPMENT AND PIPING DETAILS.
3. ROUTE 1/2" AIR LINES TO SEQUESTRANT AND SODIUM HYDROXIDE BULK TANKS' PNEUMATIC SHUT-OFF VALVES.

NO.	DATE	ISSUED FOR	BY
3	01/08	RECORD DRAWING	P.A.D.
2	07/04	ADDENDUM No. 2	P.A.D.
1	04/04	BID SET	P.A.D.

PLOT DATE: 2/11/2008 9:59 AM BY: AMEDINA

DESIGNED D.M.L.
DRAWN W.D.R.
CHECKED P.A.D.
PROJ. ENGR. P.A.D.

PATRICK A. DAVIS P.E.
No. 37167

HAZEN AND SAWYER
Environmental Engineers & Scientists
4000 Hollywood Boulevard, Suite 750N
Hollywood, Florida 33021
Certificate of Authorization Number: 2771

SCALE 3/8"=1'-0"

CONTRACT: –
CLIENTS PROJECT:
ENGINEERS PROJECT: 40406
CAD REFERENCE: 40406M18

CITY OF HALLANDALE BEACH City of Choice
CITY OF HALLANDALE BEACH
UTILITIES DEPARTMENT

6 MGD MEMBRANE SOFTENING W.T.P.

DEGASIFIERS BOTTOM PLAN

DATE: JANUARY 2008
SHEET: 28 OF 162
DRAWING: M-18

RECORD DRAWING

XREFs= ..\100\DB-P1-MB,..\100\DB-P1-SB

File = O:\40406\40406-001\Drawings\MECH\40406M18 Saved by GDIAZ Save date = 1/30/2008 3:28 PM

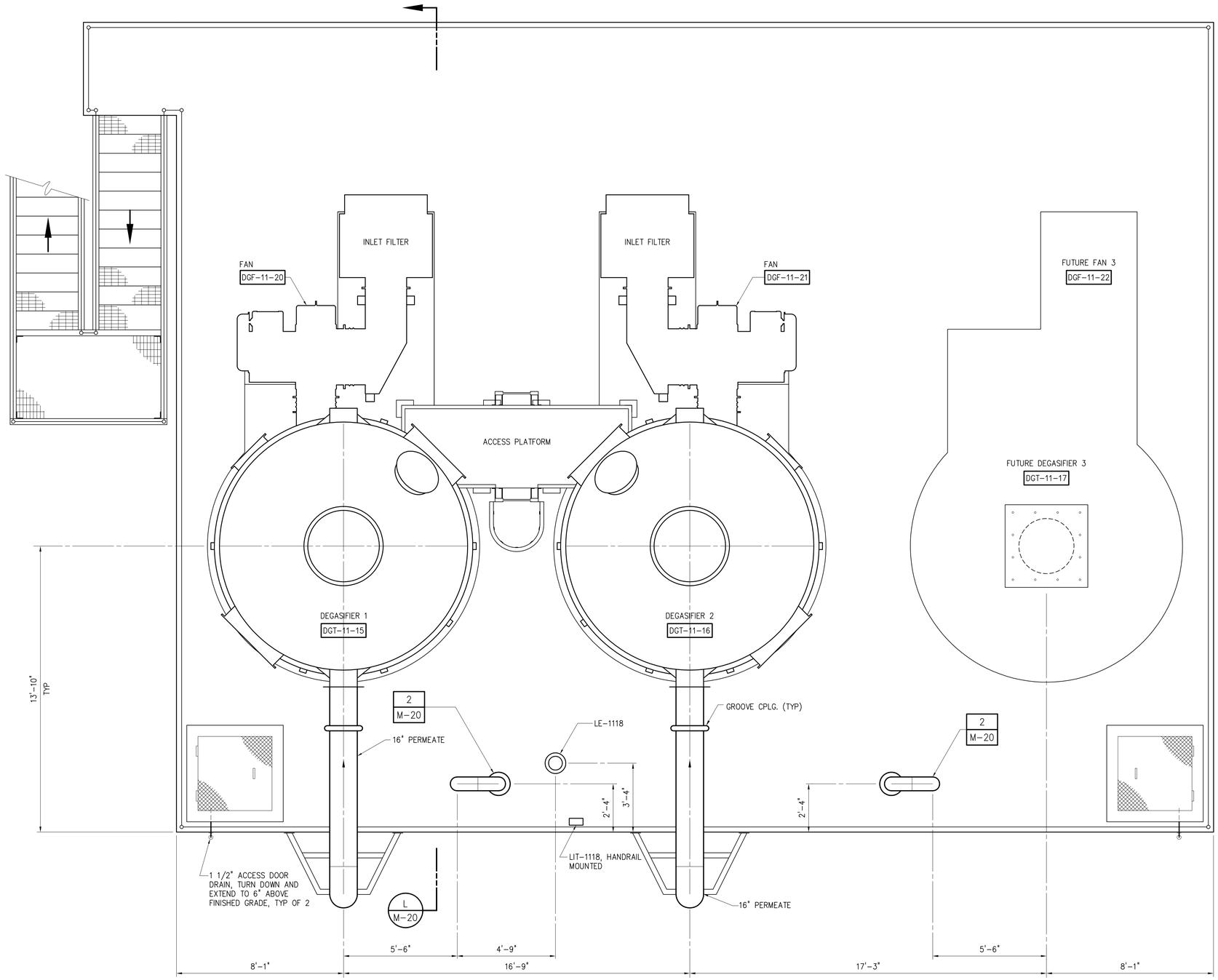

TOP PLAN

3/8"=1'-0"

3/8"=1'-0"

12" 0 1 2 4'

NO.	DATE	ISSUED FOR	BY
2	01/08	RECORD DRAWING	P.A.D.
1	10/03	BID SET	P.A.D.

DESIGNED D.M.L.
DRAWN W.D.R.
CHECKED P.A.D.
PROJ. ENGR. P.A.D.

PATRICK A. DAVIS P.E.
No. 37167

HAZEN AND SAWYER
Environmental Engineers & Scientists
4000 Hollywood Boulevard, Suite 750N
Hollywood, Florida 33021
Certificate of Authorization Number: 2771

SCALE 3/8"=1'-0"

CONTRACT: –
CLIENTS PROJECT:
ENGINEERS PROJECT: 40406
CAD REFERENCE: 40406M19

CITY OF HALLANDALE BEACH
UTILITIES DEPARTMENT

6 MGD MEMBRANE SOFTENING W.T.P.

DEGASIFIERS
TOP PLAN

DATE: JANUARY 2008
SHEET: 29 OF 162
DRAWING: M-19

RECORD DRAWING

PLOT DATE: 2/11/2008 9:57 AM BY: AMEDINA

XREFs= ..\100\DB-PR-SB,..\100\DB-PR-MB

File = O:\40406\40406-001\Drawings\MECH\40406M19 Saved by GDIAZ Save date = 1/30/2008 2:34 PM

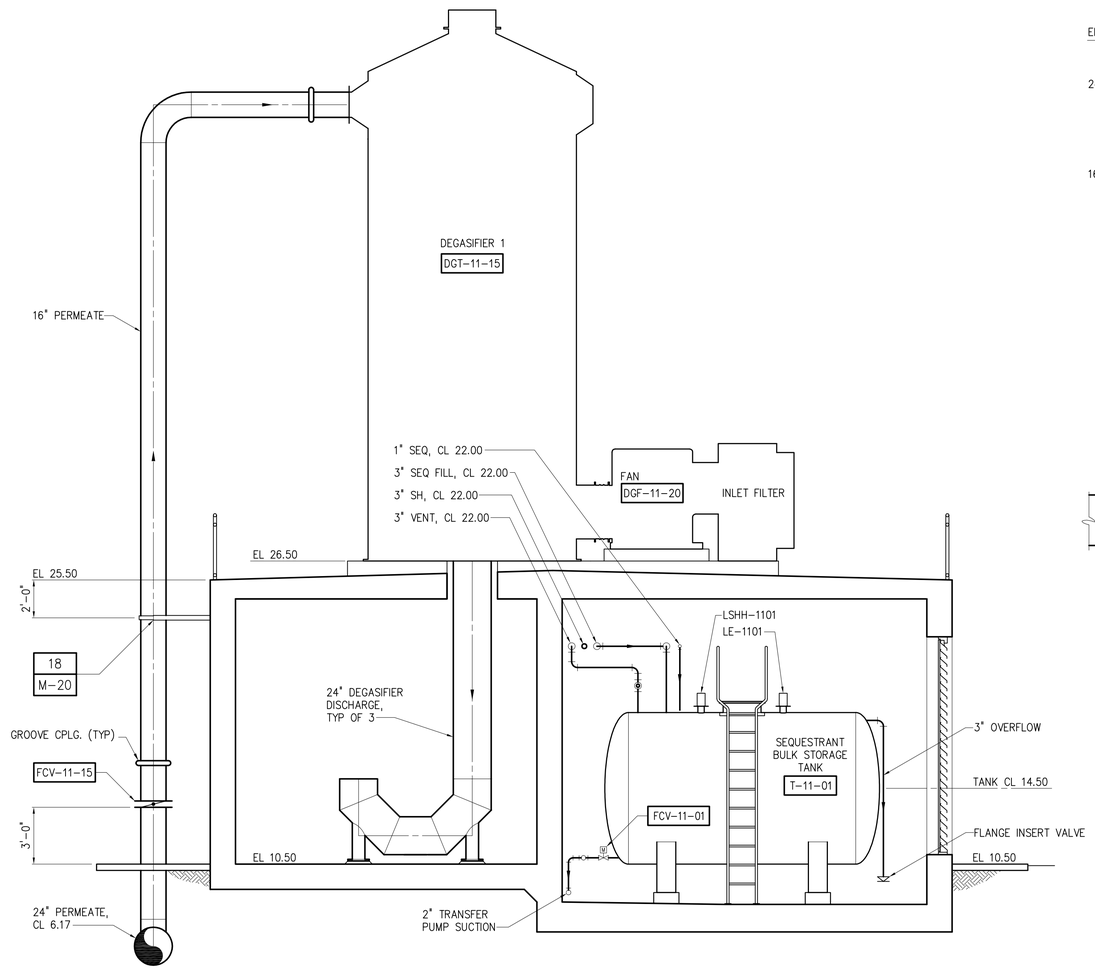

SECTION L / M-18
1/4"=1'-0"

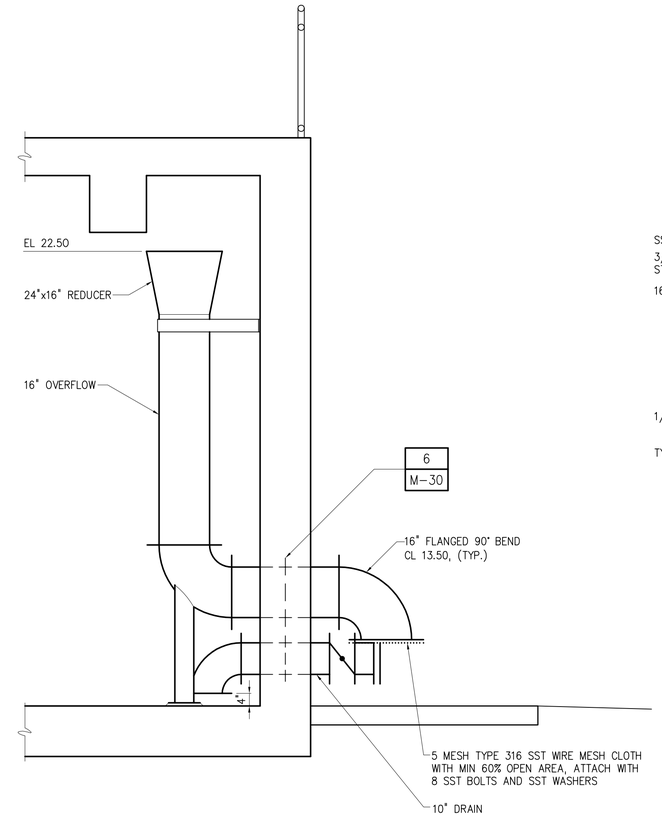

SECTION M / M-18
1/2"=1'-0"

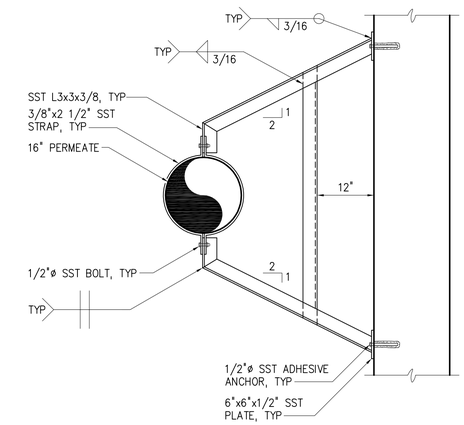

16" PERMEATE SUPPORT
DETAIL 18 / M-19
3/4"=1'-0"

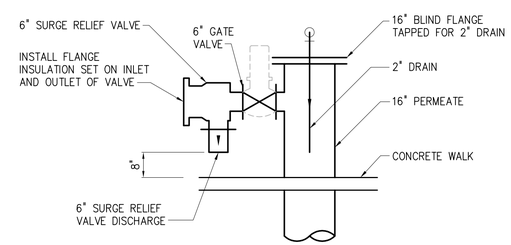

SURGE RELIEF VALVE
DETAIL 17 / M-18
1/2"=1'-0"

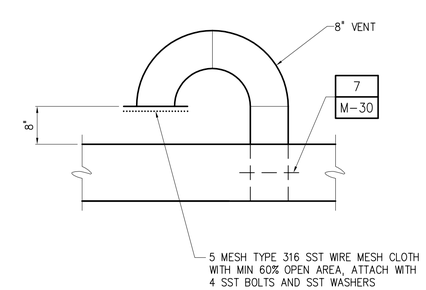

TYPICAL VENT
DETAIL 2 / M-19
3/4"=1'-0"

1/4"=1'-0"
1 0 1 2 3 7'

NO.	DATE	ISSUED FOR	BY
3	01/08	RECORD DRAWING	P.A.D.
2	07/04	ADDENDUM No. 2	P.A.D.
1	10/03	BID SET	P.A.D.

DESIGNED JANUARY 2008
DRAWN W.D.R.
CHECKED P.A.D.
PROJ. ENGR. P.A.D.

PATRICK A. DAVIS P.E.
No. 37167

HAZEN AND SAWYER
Environmental Engineers & Scientists
4000 Hollywood Boulevard, Suite 750N
Hollywood, Florida 33021
Certificate of Authorization Number: 2771

SCALE 1/4"=1'-0"

CONTRACT: –
CLIENTS PROJECT:
ENGINEERS PROJECT: 40406
CAD REFERENCE: 40406M20

CITY OF HALLANDALE BEACH
UTILITIES DEPARTMENT

6 MGD MEMBRANE SOFTENING W.T.P.

DEGASIFIERS
SECTIONS AND DETAIL

DATE: OCTOBER 2003
SHEET: 30 OF 162
DRAWING: M-20

RECORD DRAWING

PLOT DATE: 2/8/2008 4:57 PM BY: AMEDINA

XREFs= ..\100\DB-S02-M,..\100\DB-S02-S,..\100\DB-S03-M,..\100\DB-M-DA,..\100\DB-M-DB,..\100\DB-M-DC

File = O:\40406\40406-001\Drawings\MECH\40406M20 Saved by GDIAZ Save date = 1/30/2008 2:35 PM

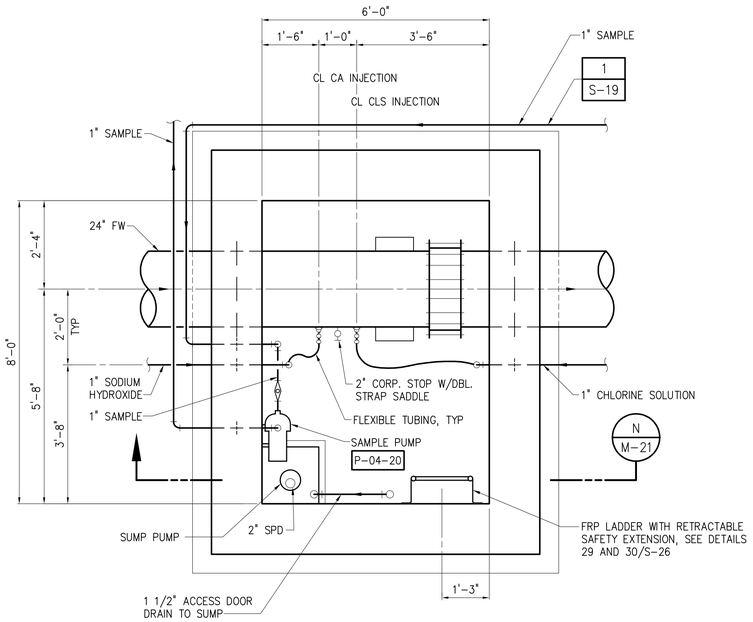

BOTTOM PLAN – V1

1/2"=1'-0"

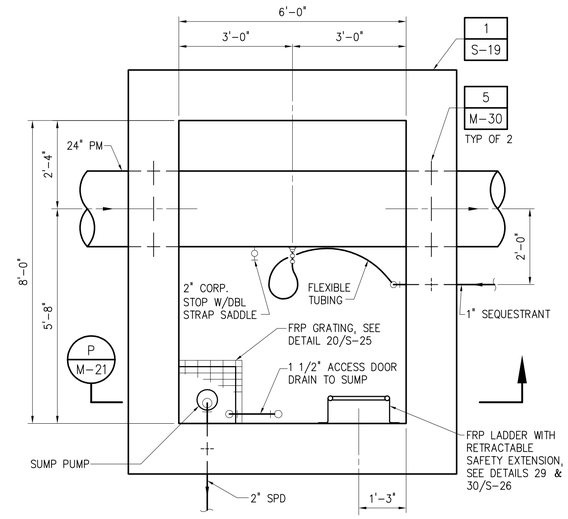

BOTTOM PLAN – V2

1/2"=1'-0"

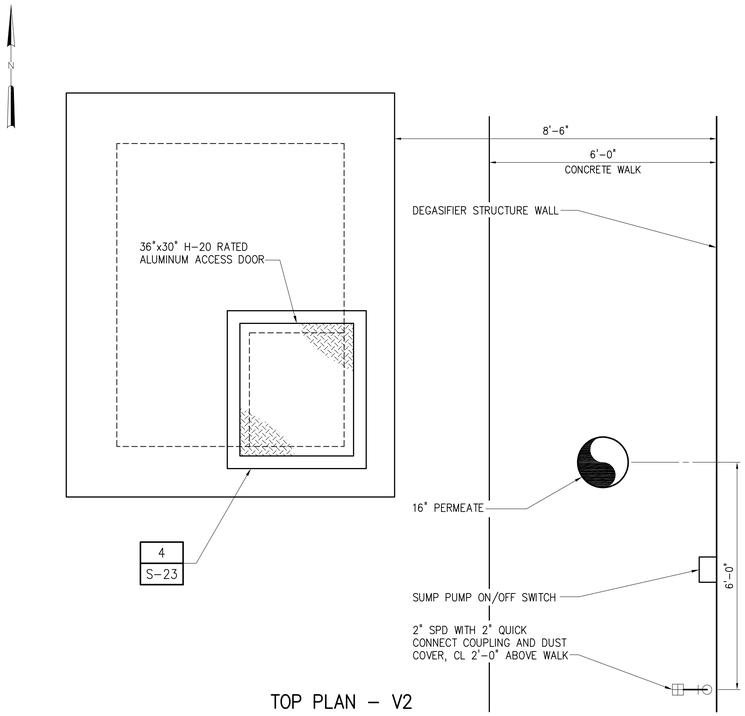

TOP PLAN – V2

1/2"=1'-0"

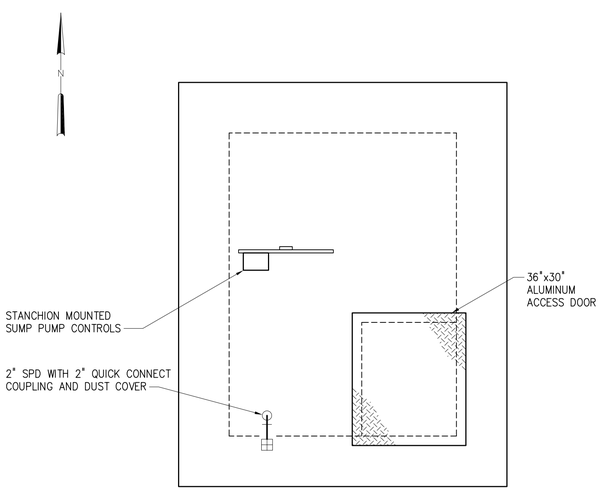

TOP PLAN – V1

1/2"=1'-0"

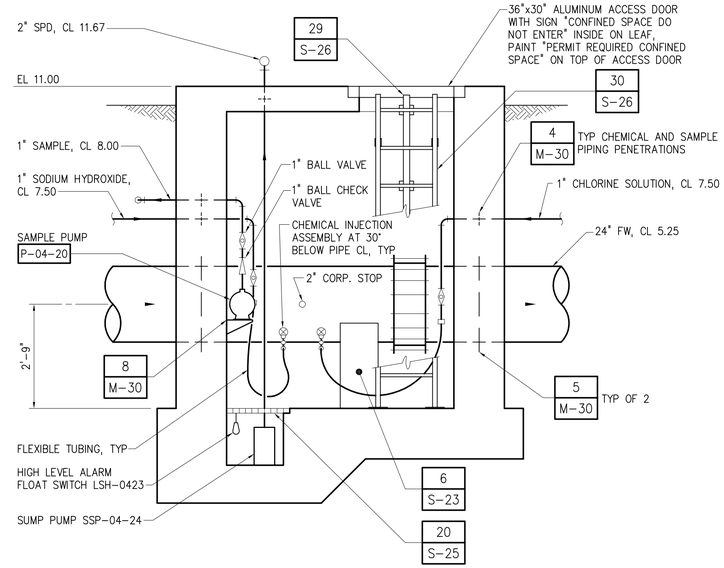

SECTION N M-21

1/2"=1'-0"

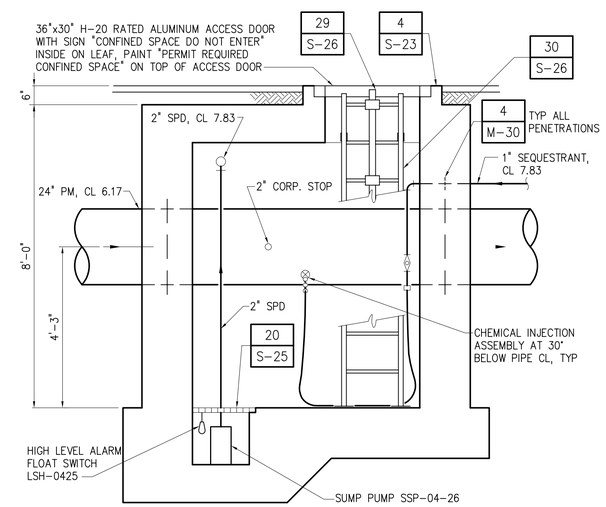

SECTION P M-21

1/2"=1'-0"

1/2"=1'-0" 12" 0 1 3'

NO.	DATE	ISSUED FOR	BY
2	01/08	RECORD DRAWING	P.A.D.
1	04/04	BID SET	P.A.D.

DESIGNED D.M.L.
DRAWN W.D.R.
CHECKED P.A.D.
PROJ. ENGR. P.A.D.

PATRICK A. DAVIS P.E.
No. 37167

HAZEN AND SAWYER
Environmental Engineers & Scientists
4000 Hollywood Boulevard, Suite 750N
Hollywood, Florida 33021
Certificate of Authorization Number: 2771

SCALE 1/2"=1'-0"

CONTRACT: –
CLIENTS PROJECT:
ENGINEERS PROJECT: 40406
CAD REFERENCE: 40406M21

CITY OF HALLANDALE BEACH
UTILITIES DEPARTMENT

6 MGD MEMBRANE SOFTENING W.T.P.

CHEMICAL INJECTION VAULT 1 AND 2
PLANS AND SECTIONs

DATE: JANUARY 2008
SHEET: 31 OF 162
DRAWING: M-21

RECORD DRAWING

PLOT DATE: 2/8/2008 4:57 PM BY: AMEDINA

XREFs= ..\100\MH-PB,..\100\MH-S01,..\100\MH-P1,..\100\DB-P1-MB,..\100\V-PT,..\100\V-S01

File = O:\40406\40406-001\Drawings\MECH\40406M21 Saved by GDIAZ Save date = 1/30/2008 2:37 PM

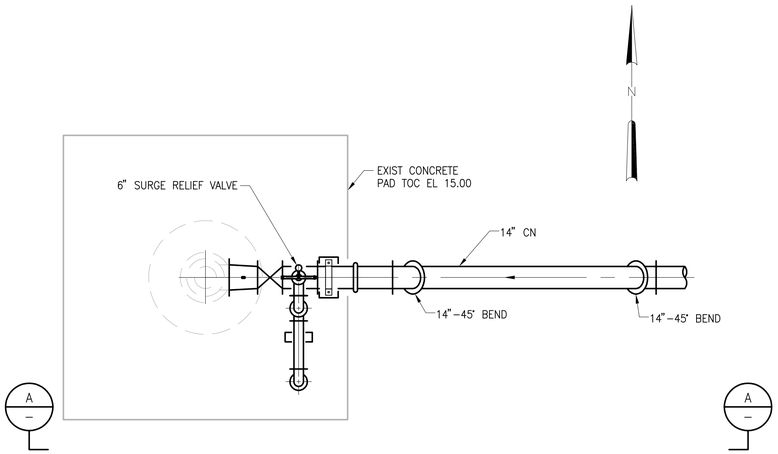

PLAN
1/2"=1'-0"

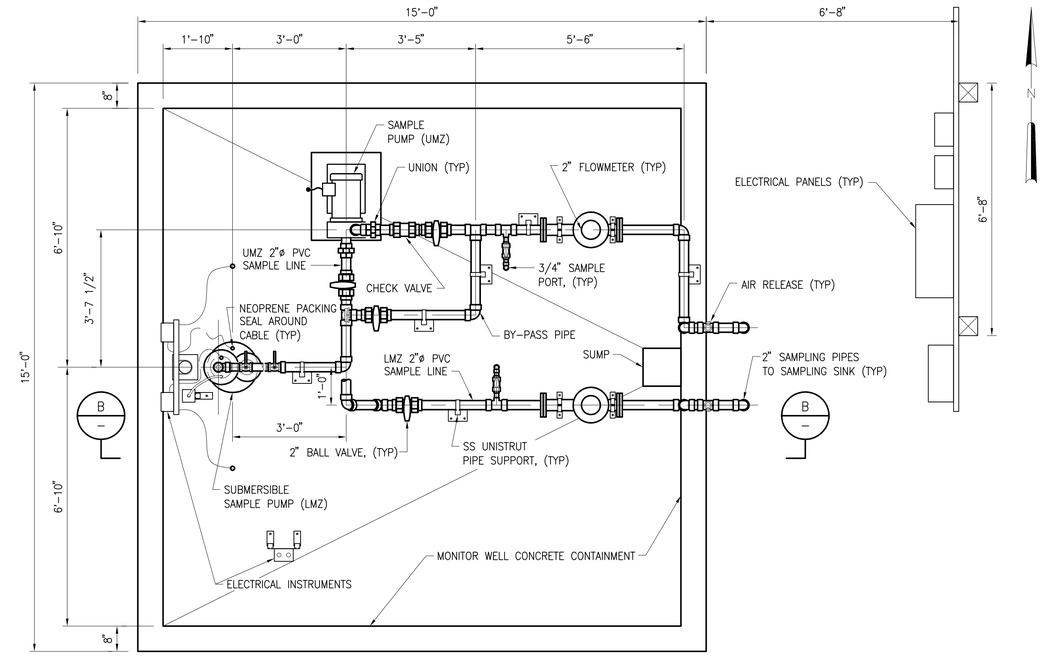

PLAN
1/2"=1'-0"

NOTE:
1. THIS DETAIL SHALL BE USED IF WELL HYDROGEOLOY PERMITS. AFTER COMPLETION OF THE MONITOR WELL (BY OTHERS), THE ENGINEER WILL SELECT EITHER A SUBMERSIBLE OR A HORIZONTAL CENTRIFUGAL PUMP FOR THE LOWER MONITORING ZONE.

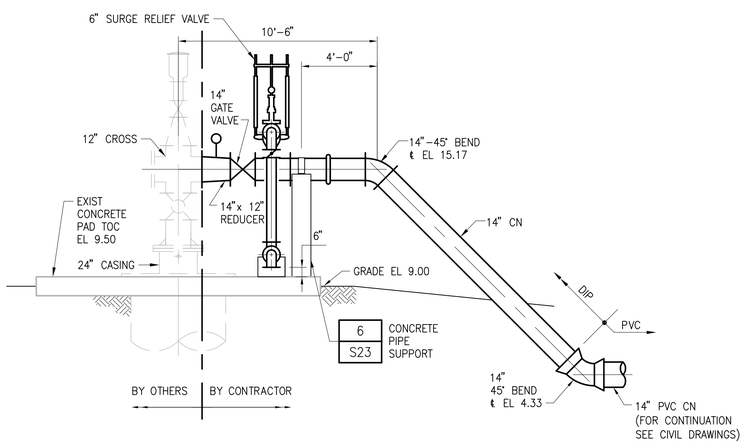

SECTION A/–
1/2"=1'-0"

INJECTION WELLHEAD CONNECTION DETAIL
1/4"=1'-0"

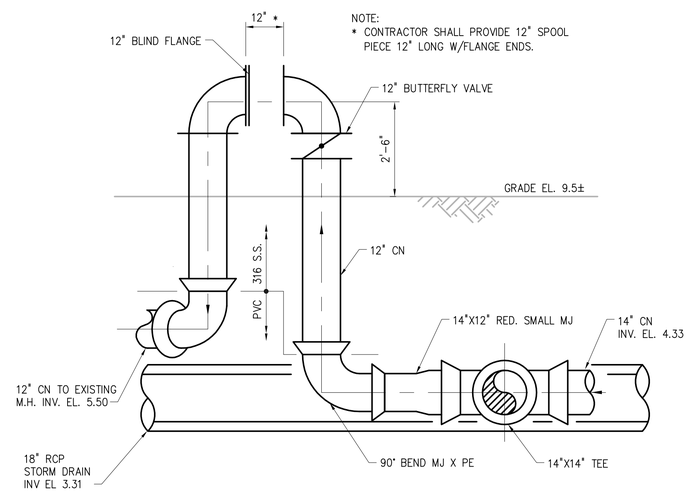

NOTE:
* CONTRACTOR SHALL PROVIDE 12" SPOOL PIECE 12" LONG W/FLANGE ENDS.

SECTION E/M2
1/2"=1'-0"

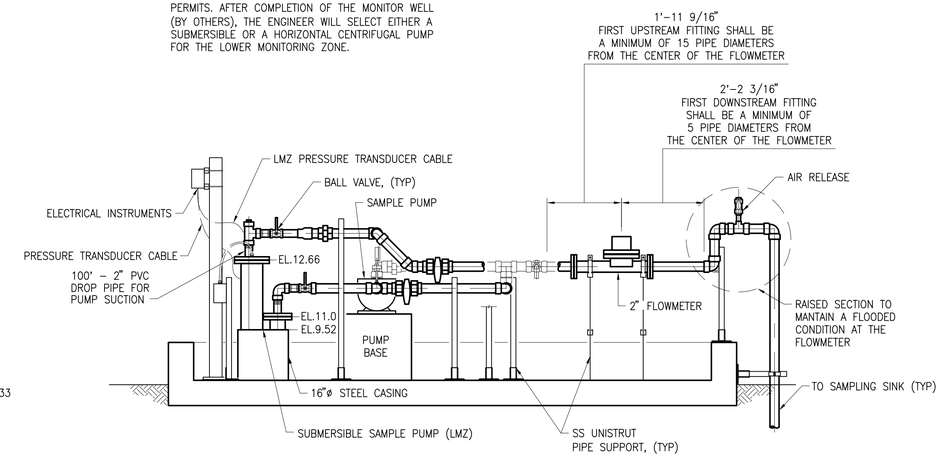

SECTION B/–
1/2"=1'-0"

MONITOR WELL SAMPLE PUMP DETAIL
1/2"=1'-0"

1/4"=1'-0" 1 0 1 2 3 7'
1/2"=1'-0" 12" 0 1 3'

NOTE:
1. THIS DETAIL SHALL BE USED IF WELL HYDROGEOLOY PERMITS. AFTER COMPLETION OF THE MONITOR WELL (BY OTHERS), THE ENGINEER WILL SELECT EITHER A SUBMERSIBLE OR A HORIZONTAL CENTRIFUGAL PUMP FOR THE LOWER MONITORING ZONE.

NO.	DATE	ISSUED FOR	BY
4	01/08	RECORD DRAWING	P.A.D.
3	07/04	ADDENDUM No. 2	P.A.D.
2	06/04	ADDENDUM No. 1	P.A.D.
1	04/04	BID SET	P.A.D.

DESIGNED D.M.L.
DRAWN W.D.R.
CHECKED P.A.D.
PROJ. ENGR. P.A.D.

PATRICK A. DAVIS P.E.
No. 37167

HAZEN AND SAWYER
Environmental Engineers & Scientists
4000 Hollywood Boulevard, Suite 750N
Hollywood, Florida 33021
Certificate of Authorization Number: 2771

SCALE: AS SHOWN

CONTRACT: –
CLIENTS PROJECT:
ENGINEERS PROJECT: 40406
CAD REFERENCE: 40406M22

CITY OF HALLANDALE BEACH City of Choice
CITY OF HALLANDALE BEACH
UTILITIES DEPARTMENT

6 MGD MEMBRANE SOFTENING W.T.P.

SAMPLE PUMPS AND INJECTION WELLHEAD CONNECTION DETAILS

DATE: JANUARY 2008
SHEET: 32 OF 162
DRAWING: M-22

RECORD DRAWING

PLOT DATE: 2/8/2008 4:57 PM BY: AMEDINA
XREFs=
File = O:\40406\40406-001\Drawings\MECH\40406M22 Saved by GDIAZ Save date = 1/30/2008 2:38 PM

NOTES:

1 CONTRACTOR SHALL COORDINATE WITH BULK TANK MANUFACTURER TO DETERMINE MAXIMUM CHEMICAL LEVEL AT DESIGN VOLUME.

2 THE MATERIALS AND ELASTOMERS USED FOR THE CHEMICAL INJECTION ASSEMBLIES SHALL BE COMPATIBLE WITH THE CHEMICALS BEING CONVEYED.

3 CONTRACTOR SHALL SUBMIT DETAILED PROPOSED LAYOUT OF CHEMICAL PIPING FOR ENGINEER'S REVIEW PRIOR TO INSTALLATION.

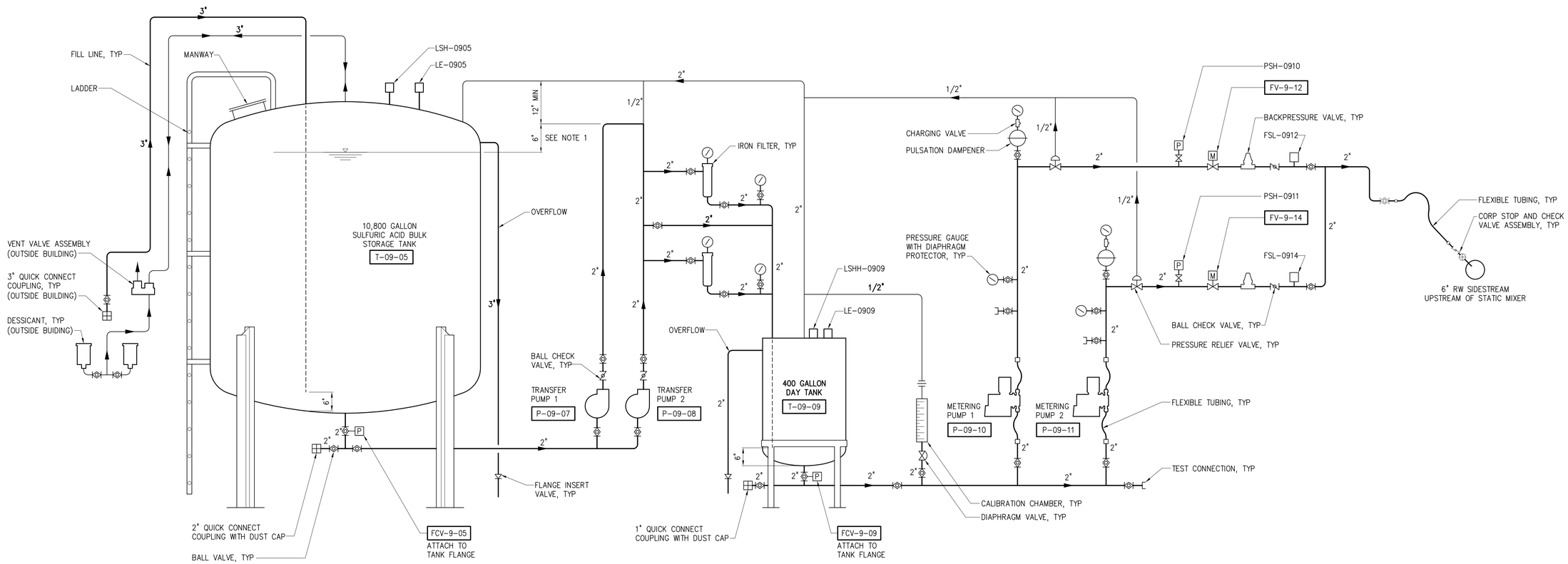

SULFURIC ACID FEED SYSTEM SCHEMATIC

NO.	DATE	ISSUED FOR	BY
2	01/08	RECORD DRAWING	P.A.D.
1	10/03	BID SET	P.A.D.

DESIGNED D.M.L.
DRAWN W.D.R.
CHECKED P.A.D.
PROJ. ENGR. P.A.D.

PATRICK A. DAVIS P.E.
No. 37167

HAZEN AND SAWYER
Environmental Engineers & Scientists
4000 Hollywood Boulevard, Suite 750N
Hollywood, Florida 33021
Certificate of Authorization Number: 2771

SCALE NONE

CONTRACT: –
CLIENTS PROJECT:
ENGINEERS PROJECT: 40406
CAD REFERENCE: 40406M23

CITY OF HALLANDALE BEACH
UTILITIES DEPARTMENT

6 MGD MEMBRANE SOFTENING W.T.P.

SULFURIC ACID FEED SYSTEM
SCHEMATIC

DATE: JANUARY 2008
SHEET: 33 OF 162
DRAWING: M-23

RECORD DRAWING

PLOT DATE: 2/8/2008 4:57 PM BY: AMEDINA

XREFs= ..\200\CF-SC-AM

File = O:\40406\40406-001\Drawings\MECH\40406M23 Saved by GDIAZ Save date = 1/30/2008 2:39 PM

NOTES:

1. CONTRACTOR SHALL COORDINATE WITH BULK TANK MANUFACTURER TO DETERMINE MAXIMUM CHEMICAL LEVEL AT DESIGN VOLUME.
2. THE MATERIALS AND ELASTOMERS USED FOR THE CHEMICAL INJECTION ASSEMBLIES SHALL BE COMPATIBLE WITH THE CHEMICALS BEING CONVEYED.
3. CONTRACTOR SHALL SUBMIT DETAILED PROPOSED LAYOUT OF CHEMICAL PIPING FOR ENGINEER'S REVIEW PRIOR TO INSTALLATION.

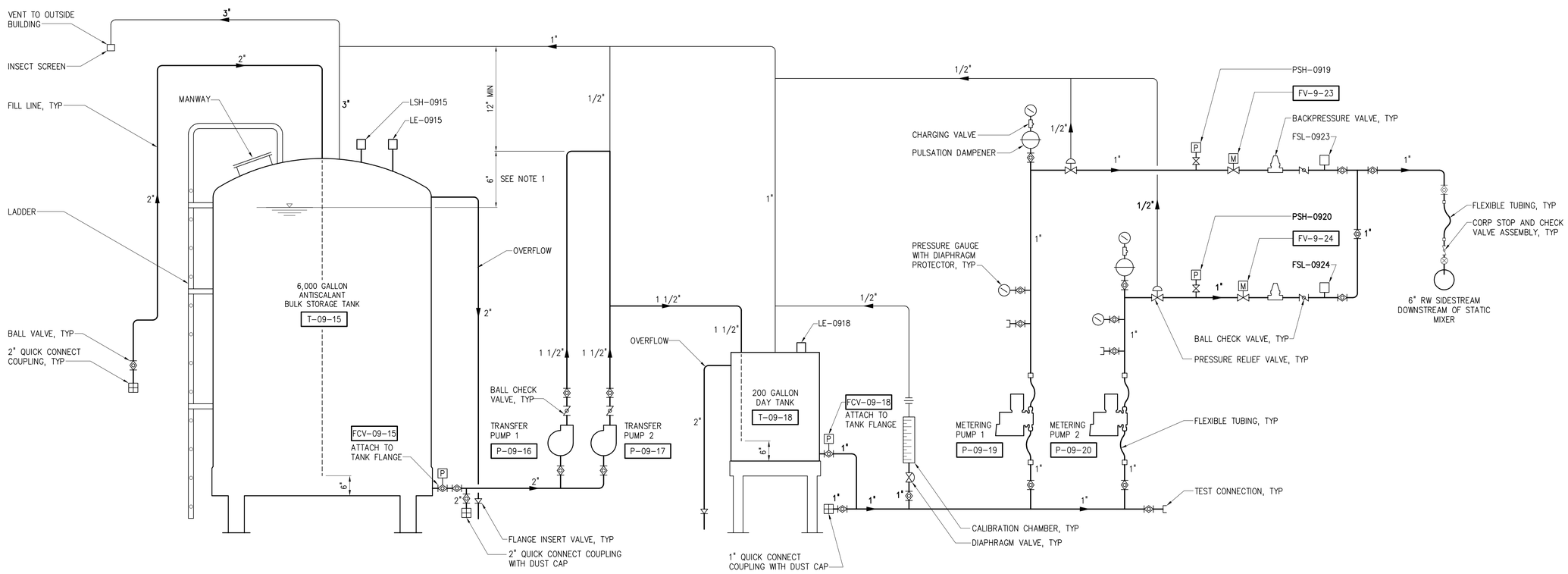

ANTISCALANT FEED SYSTEM SCHEMATIC

NO.	DATE	ISSUED FOR	BY
2	01/08	RECORD DRAWING	P.A.D.
1	04/04	BID SET	P.A.D.

DESIGNED D.M.L.
DRAWN W.D.R.
CHECKED P.A.D.
PROJ. ENGR. P.A.D.

PATRICK A. DAVIS P.E.
No. 37167

HAZEN AND SAWYER
Environmental Engineers & Scientists
4000 Hollywood Boulevard, Suite 750N
Hollywood, Florida 33021
Certificate of Authorization Number: 2771

SCALE: NONE

CONTRACT: –
CLIENTS PROJECT:
ENGINEERS PROJECT: 40406
CAD REFERENCE: 40406M24

CITY OF HALLANDALE BEACH
UTILITIES DEPARTMENT

6 MGD MEMBRANE SOFTENING W.T.P.

ANTISCALANT FEED SYSTEM SCHEMATIC

DATE: JANUARY 2008
SHEET: 34 OF 162
DRAWING: M-24

RECORD DRAWING

PLOT DATE: 2/8/2008 4:57 PM BY: AMEDINA

XREFs= ..\200\CF-SC-BM

File = O:\40406\40406-001\Drawings\MECH\40406M24 Saved by GDIAZ Save date = 1/30/2008 2:41 PM

NOTES:

1. CONTRACTOR SHALL COORDINATE WITH BULK TANK MANUFACTURER TO DETERMINE MAXIMUM CHEMICAL LEVEL AT DESIGN VOLUME.
2. THE MATERIALS AND ELASTOMERS USED FOR THE CHEMICAL INJECTION ASSEMBLIES SHALL BE COMPATIBLE WITH THE CHEMICALS BEING CONVEYED.
3. CONTRACTOR SHALL SUBMIT DETAILED PROPOSED LAYOUT OF CHEMICAL PIPING FOR ENGINEER'S REVIEW PRIOR TO INSTALLATION.

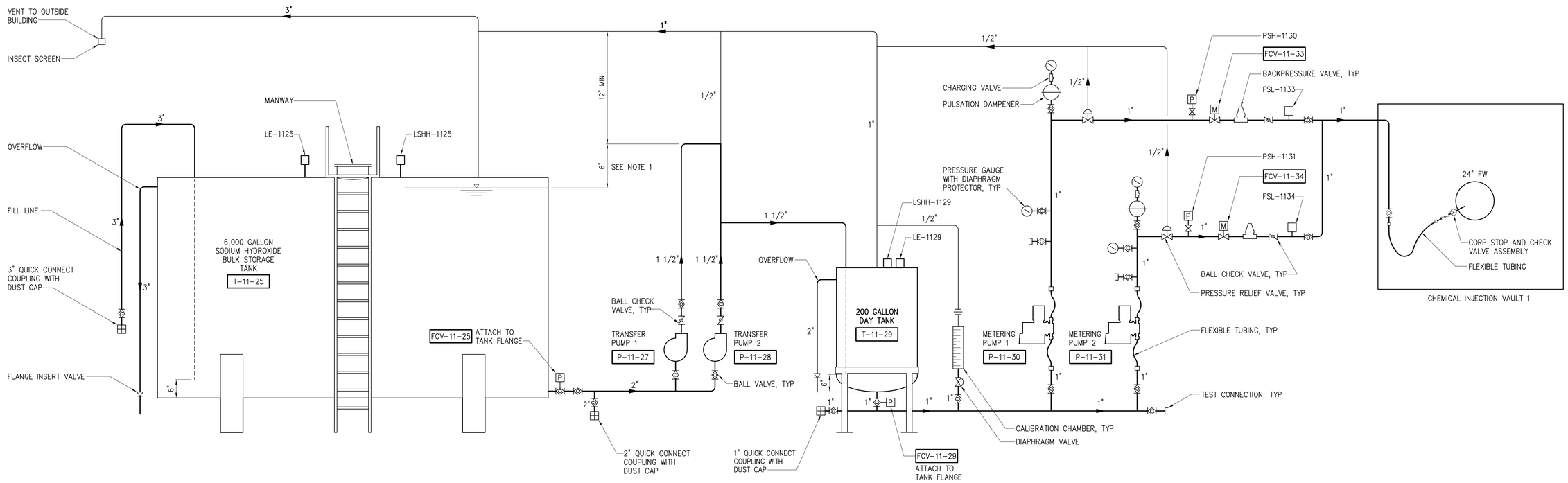

SODIUM HYDROXIDE FEED SYSTEM SCHEMATIC

NO.	DATE	ISSUED FOR	BY
2	01/08	RECORD DRAWING	P.A.D.
1	04/04	BID SET	P.A.D.

DESIGNED D.M.L.
DRAWN W.D.R.
CHECKED P.A.D.
PROJ. ENGR. P.A.D.

PATRICK A. DAVIS P.E.
No. 37167

HAZEN AND SAWYER
Environmental Engineers & Scientists
4000 Hollywood Boulevard, Suite 750N
Hollywood, Florida 33021
Certificate of Authorization Number: 2771

SCALE: NONE

CONTRACT: –
CLIENTS PROJECT:
ENGINEERS PROJECT: 40406
CAD REFERENCE: 40406M25

CITY OF HALLANDALE BEACH
UTILITIES DEPARTMENT

6 MGD MEMBRANE SOFTENING W.T.P.

SODIUM HYDROXIDE FEED SYSTEM SCHEMATIC

DATE: JANUARY 2008
SHEET: 35 OF 162
DRAWING: M-25

RECORD DRAWING

PLOT DATE: 2/8/2008 4:57 PM BY: AMEDINA

XREFs= ..\200\CF-SC-CM

File = O:\40406\40406-001\Drawings\MECH\40406M25 Saved by GDIAZ Save date = 1/30/2008 2:42 PM

NOTES:

1. CONTRACTOR SHALL COORDINATE WITH BULK TANK MANUFACTURER TO DETERMINE MAXIMUM CHEMICAL LEVEL AT DESIGN VOLUME.
2. THE MATERIALS AND ELASTOMERS USED FOR THE CHEMICAL INJECTION ASSEMBLIES SHALL BE COMPATIBLE WITH THE CHEMICALS BEING CONVEYED.
3. CONTRACTOR SHALL SUBMIT DETAILED PROPOSED LAYOUT OF CHEMICAL PIPING FOR ENGINEER'S REVIEW PRIOR TO INSTALLATION.

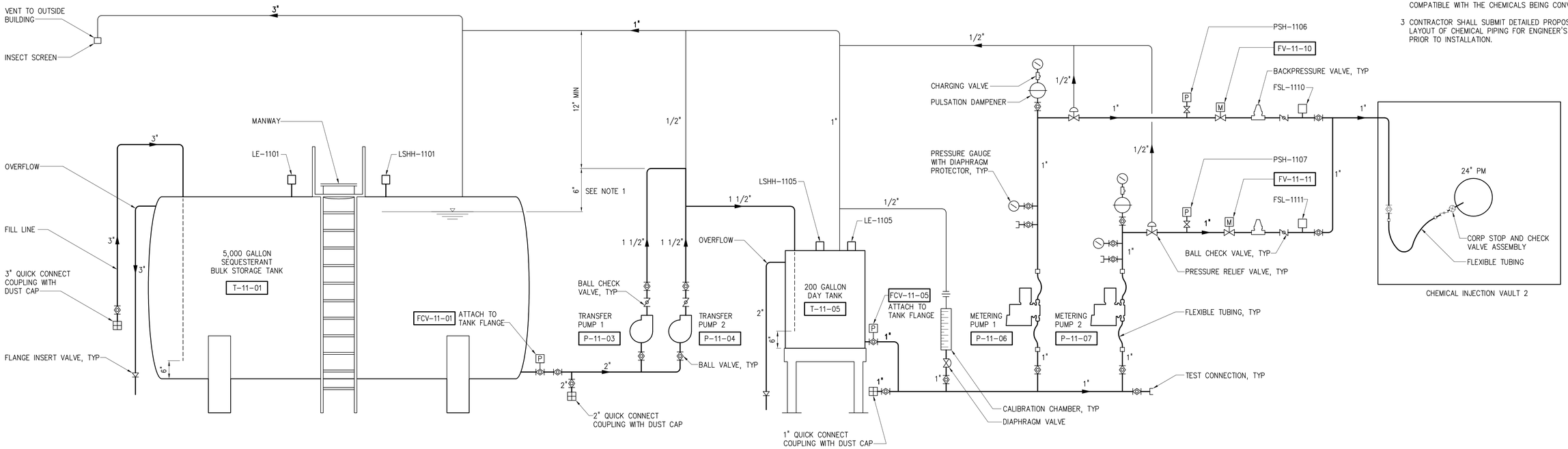

SEQUESTRANT FEED SYSTEM SCHEMATIC

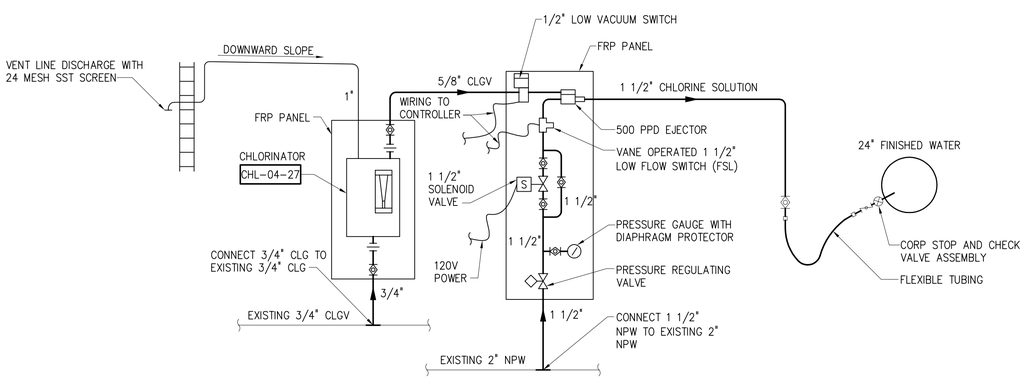

CHLORINE FEED SYSTEM SCHEMATIC

(SEE ISC CL2 VACUUM FEED SYSTEM DRAWING)

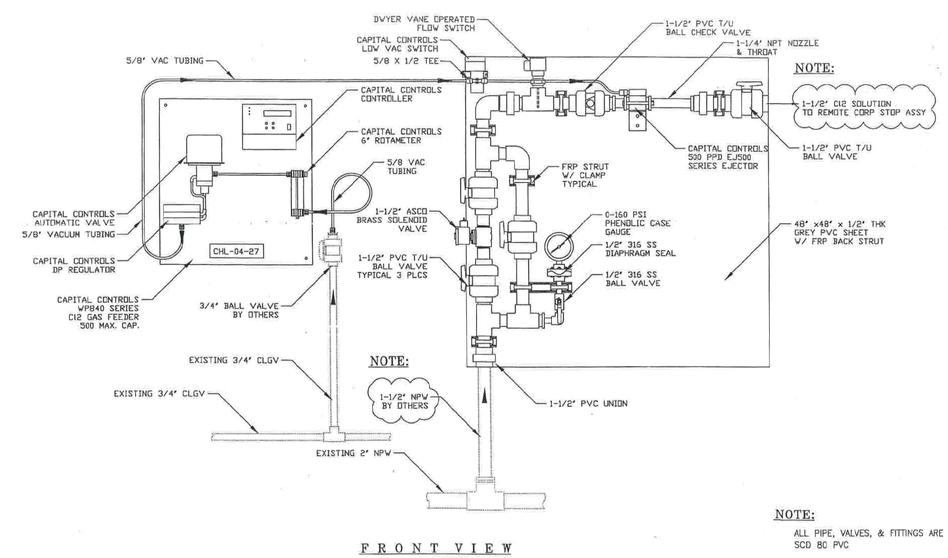

CHLORINE FEED SYSTEM SCHEMATIC

(SEE ISC CL2 VACUUM FEED SYSTEM DRAWING)

NO.	DATE	ISSUED FOR	BY
2	01/08	RECORD DRAWING	P.A.D.
1	04/04	BID SET	P.A.D.

DESIGNED D.M.L.
DRAWN W.D.R.
CHECKED P.A.D.
PROJ. ENGR. P.A.D.

PATRICK A. DAVIS P.E.
No. 37167

HAZEN AND SAWYER
Environmental Engineers & Scientists
4000 Hollywood Boulevard, Suite 750N
Hollywood, Florida 33021
Certificate of Authorization Number: 2771

SCALE: NONE

CONTRACT: –
CLIENTS PROJECT:
ENGINEERS PROJECT: 40406
CAD REFERENCE: 40406M26

CITY OF HALLANDALE BEACH
UTILITIES DEPARTMENT

6 MGD MEMBRANE SOFTENING W.T.P.

SEQUESTRANT AND CHLORINE FEED SYSTEMS SCHEMATICS

DATE: JANUARY 2008
SHEET: 36 OF 162
DRAWING: M-26

RECORD DRAWING

PLOT DATE: 2/8/2008 4:57 PM BY: AMEDINA

XREFs= ..\200\CF-SC-DM,..\200\CF-SC-GM

File = O:\40406\40406-001\Drawings\MECH\40406M26 Saved by GDIAZ Save date = 1/31/2008 3:08 PM

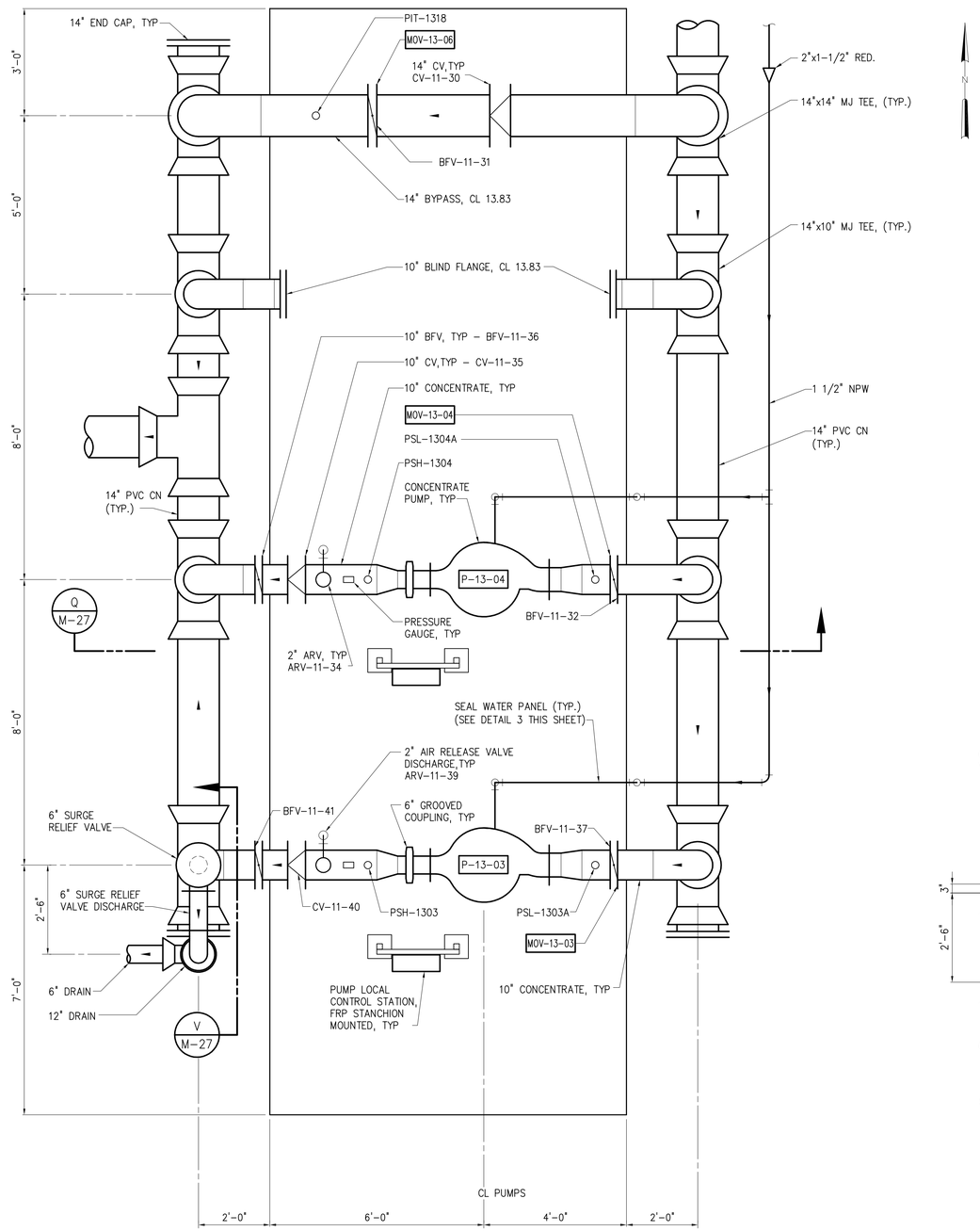

PLAN

1/2"=1'-0"

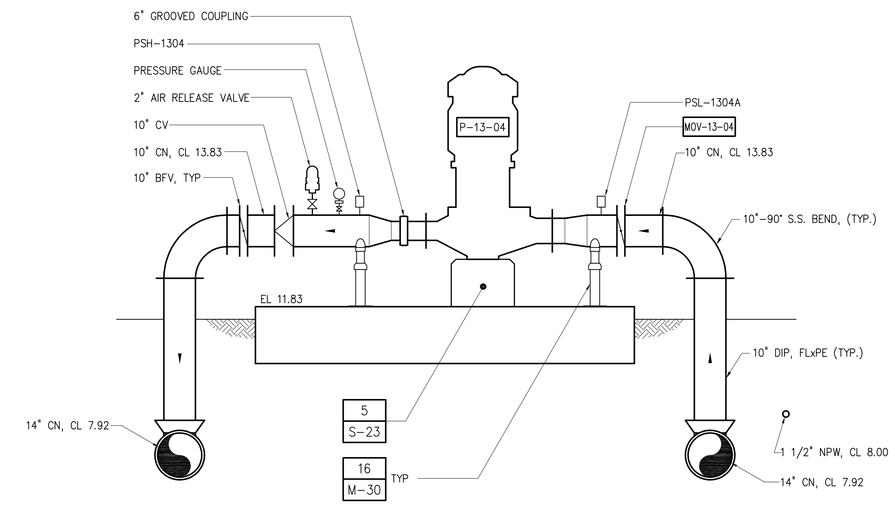

SECTION Q M-27

1/2"=1'-0"

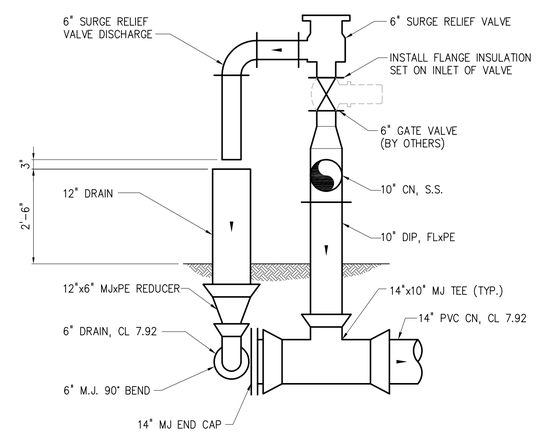

SECTION V M-27

1/2"=1'-0"

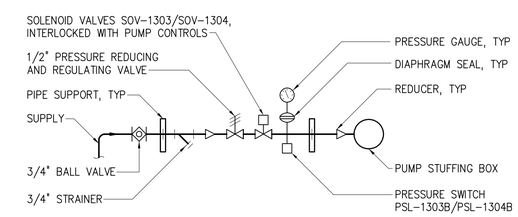

SEAL WATER PANEL SCHEMATIC

DETAIL 3 M-27

NO SCALE

1/2"=1'-0" 12" 0 1 3'

NO.	DATE	ISSUED FOR	BY
2	01/08	RECORD DRAWING	P.A.D.
1	10/03	BID SET	P.A.D.

DESIGNED D.M.L.
DRAWN W.D.R.
CHECKED P.A.D.
PROJ. ENGR. P.A.D.

PATRICK A. DAVIS P.E.
No. 37167

HAZEN AND SAWYER
Environmental Engineers & Scientists
4000 Hollywood Boulevard, Suite 750N
Hollywood, Florida 33021
Certificate of Authorization Number: 2771

SCALE 1/2"=1'-0"

CONTRACT: –
CLIENTS PROJECT:
ENGINEERS PROJECT: 40406
CAD REFERENCE: 40406M27

CITY OF HALLANDALE BEACH
UTILITIES DEPARTMENT

6 MGD MEMBRANE SOFTENING W.T.P.

CONCENTRATE PUMP STATION
PLAN, SECTIONS AND DETAIL

DATE: JANUARY 2008
SHEET: 37 OF 162
DRAWING: M-27

RECORD DRAWING

PLOT DATE: 2/8/2008 4:57 PM BY: AMEDINA

XREFs= ..\400\CP-S01-S,..\400\CP-S01-M,..\400\CP-PT-SB,..\400\CP-PT-MB,..\400\t513403,..\400\CP-S03-M

File = O:\40406\40406-001\Drawings\MECH\40406M27 Saved by GDIAZ Save date = 1/30/2008 2:45 PM

NOTES:

1 ALL INTERIOR ENGINE EXHAUST PIPING AND MUFFLERS DOWNSTREAM FROM THE FLEXIBLE CONNECTION SHALL BE INSULATED.

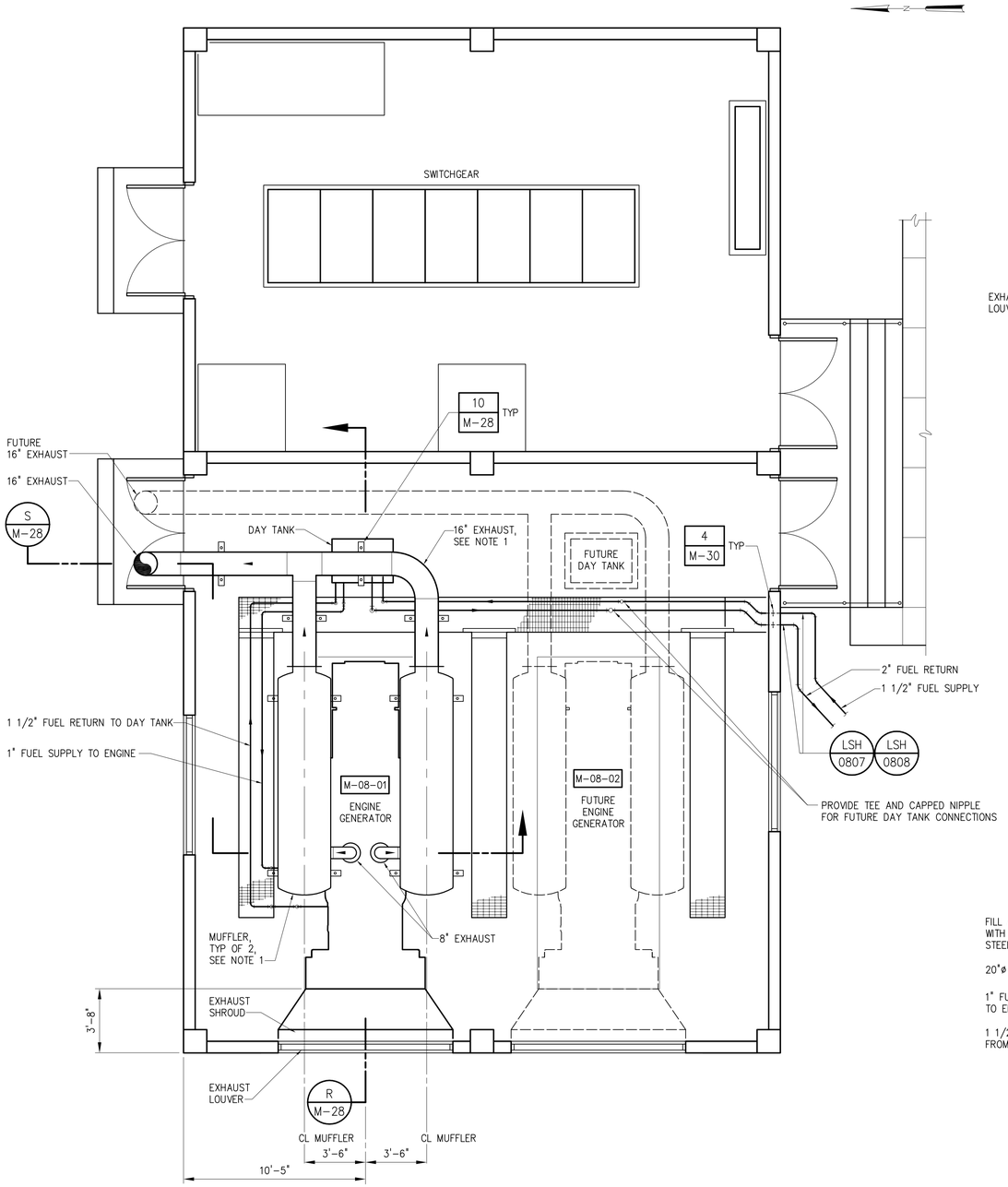

PLAN

1/4"=1'-0"

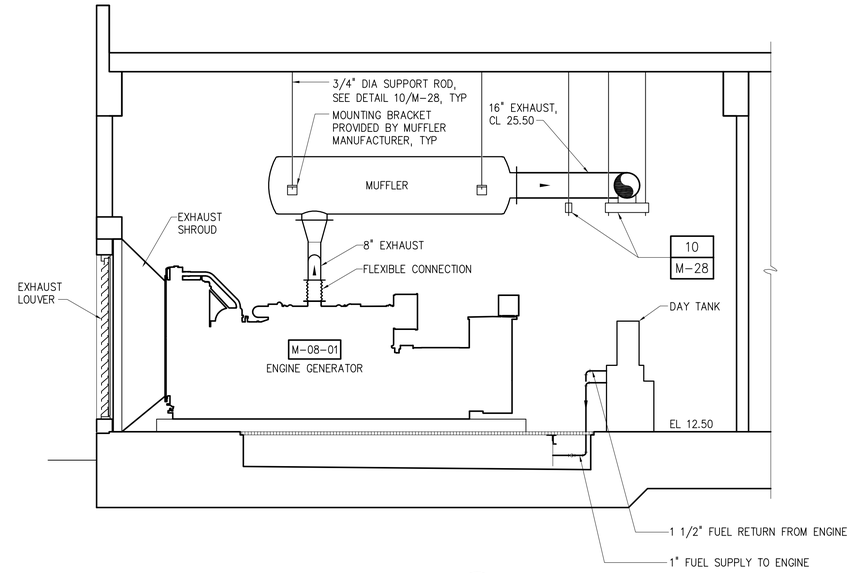

SECTION R M-28

1/4"=1'-0"

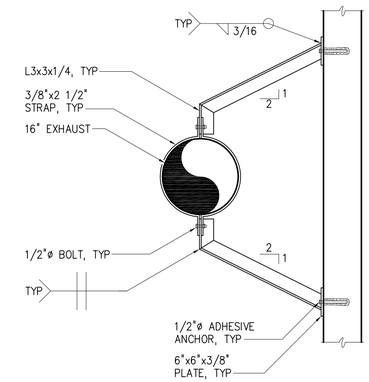

EXHAUST SUPPORT DETAIL 11 / M-28

3/4"=1'-0"

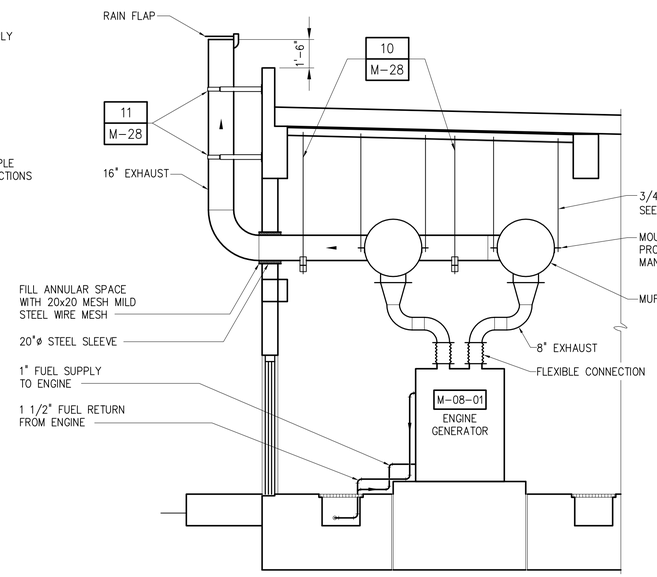

SECTION S M-28

1/4"=1'-0"

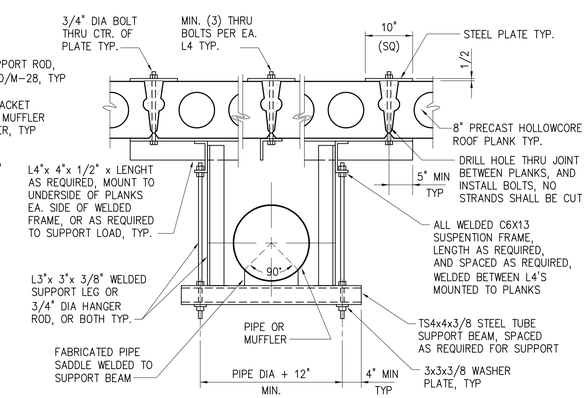

TRAPEZE SUPPORT DETAIL 10 / M-28

NO SCALE

1/4"=1'-0"

1 0 1 2 3 7'

NO.	DATE	ISSUED FOR	BY
2	01/08	RECORD DRAWING	P.A.D.
1	04/04	BID SET	P.A.D.

DESIGNED D.M.L.
DRAWN W.D.R.
CHECKED P.A.D.
PROJ. ENGR. P.A.D.

PATRICK A. DAVIS P.E.
No. 37167

HAZEN AND SAWYER
Environmental Engineers & Scientists
4000 Hollywood Boulevard, Suite 750N
Hollywood, Florida 33021
Certificate of Authorization Number: 2771

SCALE 1/4"=1'-0"

CONTRACT: –
CLIENTS PROJECT:
ENGINEERS PROJECT: 40406
CAD REFERENCE: 40406M28

CITY OF HALLANDALE BEACH
UTILITIES DEPARTMENT

6 MGD MEMBRANE SOFTENING W.T.P.

EMERGENCY GENERATOR BUILDING PLAN, SECTIONS AND DETAILS

DATE: JANUARY 2008
SHEET: 38 OF 162
DRAWING: M-28

RECORD DRAWING

PLOT DATE: 2/8/2008 4:57 PM BY: AMEDINA

XREFs= ..\950\GB-P1-MB,..\950\GB-P1-AB,..\950\GB-P1-SB,..\950\GB-S01-M,..\950\GB-S01-S,..\950\GB-S02-M,..\950\GB-S02-S,..\950\GB-M-DA,..\950\GB-M-DB

File = O:\40406\40406-001\Drawings\MECH\40406M28 Saved by GDIAZ Save date = 1/30/2008 2:46 PM

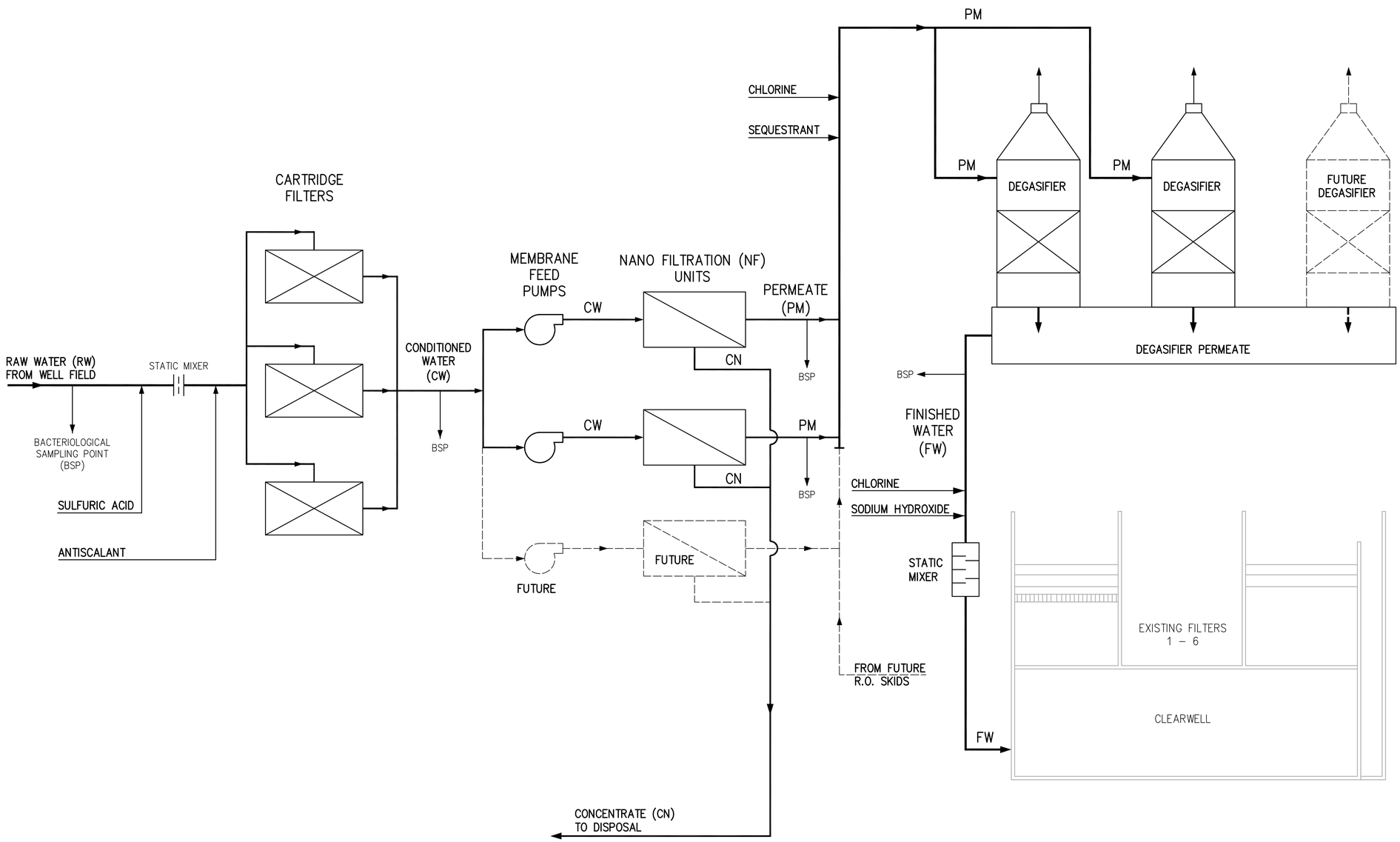

NO.	DATE	ISSUED FOR	BY
2	01/08	RECORD DRAWING	P.A.D.
1	10/03	BID SET	P.A.D.

DESIGNED D.M.L.
DRAWN W.D.R.
CHECKED P.A.D.
PROJ. ENGR. P.A.D.

PATRICK A. DAVIS P.E.
No. 37167

HAZEN AND SAWYER
Environmental Engineers & Scientists
4000 Hollywood Boulevard, Suite 750N
Hollywood, Florida 33021
Certificate of Authorization Number: 2771

SCALE NONE

CONTRACT: –
CLIENTS PROJECT:
ENGINEERS PROJECT: 40406
CAD REFERENCE: 40406M29

CITY OF HALLANDALE BEACH
UTILITIES DEPARTMENT

6 MGD MEMBRANE SOFTENING W.T.P.

PROCESS FLOW DIAGRAM

DATE: JANUARY 2008
SHEET: 39 OF 162
DRAWING: M–29

RECORD DRAWING

PLOT DATE: 2/8/2008 4:58 PM BY: AMEDINA

XREFs=

File = Q:\40406\40406-001\Drawings\MECH\40406M29 Saved by GDIAZ Save date = 1/30/2008 2:47 PM

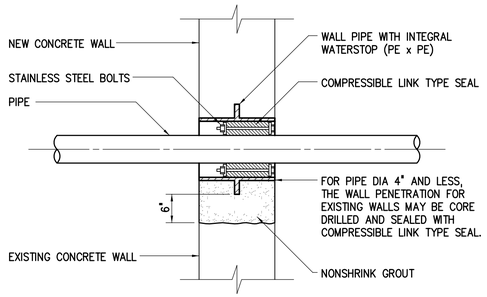

DETAIL 4
NO SCALE –

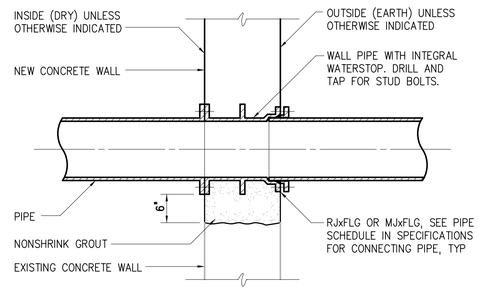

1509203
DETAIL 5
NO SCALE –

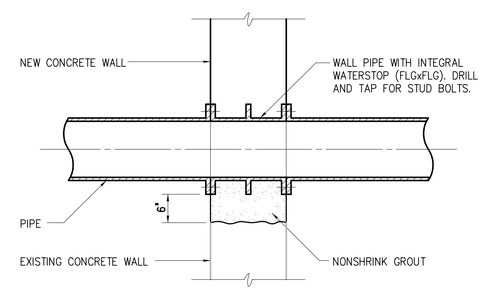

1509201
DETAIL 6
NO SCALE –

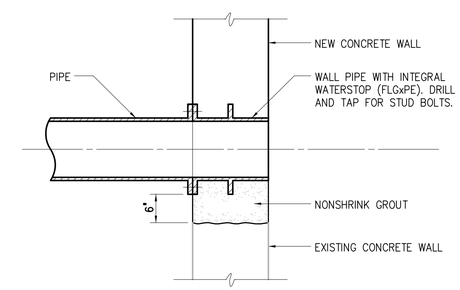

1509205
DETAIL 7
NO SCALE –

SCHEDULE									
TRAPEZE SUPPORT (DIM. IN INCHES)									
PIPE SIZE	STEEL TUBE SUPPORT BEAM VERT. x HOR.	MINIMUM ROD ø (INCHES)	WASHER PLATE	BASE PLATE			WELD	EXP. ANCHOR DIA. x LENGTH	MAX. SUPPORT SPACING IN FEET
		PROCESS PIPING		A	B	C	D		PROCESS PIPING
16–24	4x4x3/8	3/4	4x4x3/8	1	10	1/2	3/16	5/8 x 5	10

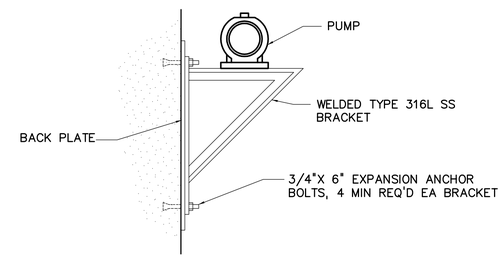

DETAIL 8
N.T.S. –

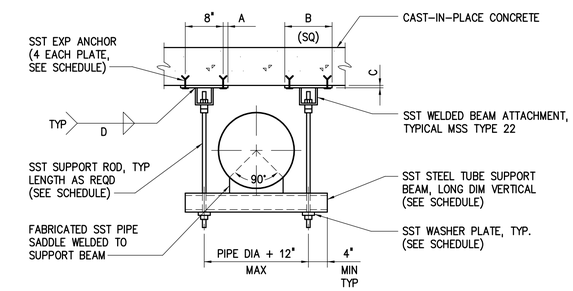

TRAPEZE SUPPORT

DETAIL 9
NO SCALE M–15

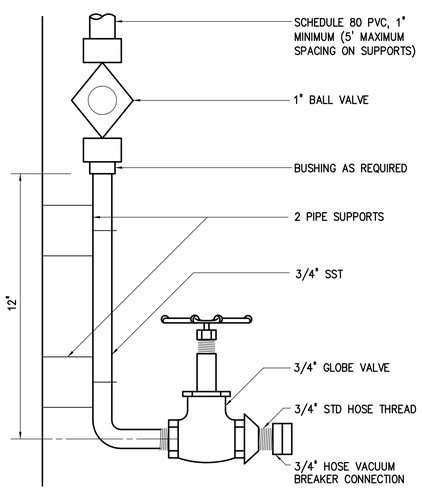

HOSE BIBB

DETAIL 12
NO SCALE –

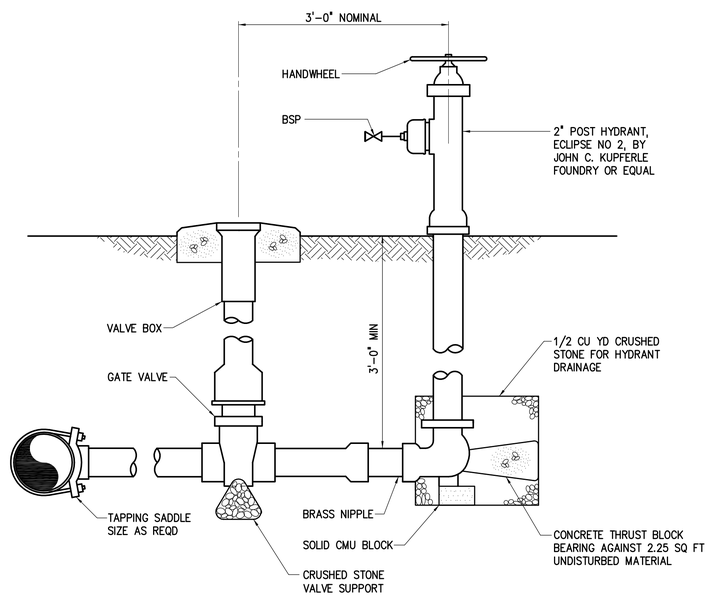

YARD HYDRANT

DETAIL 14
NO SCALE –

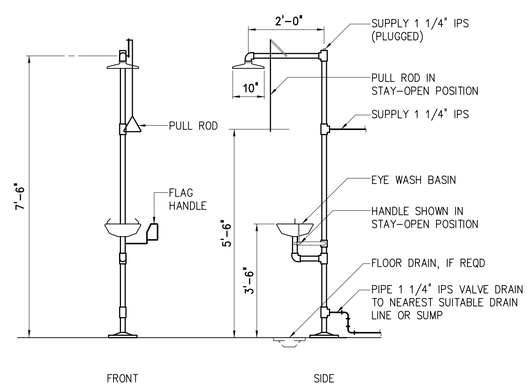

EMERGENCY SHOWER AND EYEWASH

DETAIL 15
NO SCALE –

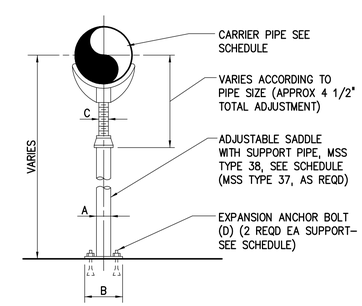

SCHEDULE				
ADJUSTABLE SADDLE (DIMENSIONS IN INCHES)				
PIPE SIZE	A	B	C	D DIA x LG
3	2 1/2	7	1 1/2	5/8 x 5
4–12	3	7 1/2	2 1/2	5/8 x 5
14–16	4	9	3	5/8 x 5
18–20	6	11	3 1/2	3/4 x 6
24–36	6	11	4	3/4 x 6

ADJUSTABLE SADDLE

DETAIL 16
NO SCALE –

NO.	DATE	ISSUED FOR	BY
2	01/08	RECORD DRAWING	P.A.D.
1	04/04	BID SET	P.A.D.

DESIGNED D.M.L.
DRAWN W.D.R.
CHECKED P.A.D.
PROJ. ENGR. P.A.D.

PATRICK A. DAVIS P.E.
No. 37167

HAZEN AND SAWYER
Environmental Engineers & Scientists
4000 Hollywood Boulevard, Suite 750N
Hollywood, Florida 33021
Certificate of Authorization Number: 2771

SCALE: NONE

CONTRACT: –
CLIENTS PROJECT:
ENGINEERS PROJECT: 40406
CAD REFERENCE: 40406M29

CITY OF HALLANDALE BEACH
UTILITIES DEPARTMENT

6 MGD MEMBRANE SOFTENING W.T.P.

MECHANICAL STANDARD DETAILS

DATE: JANUARY 2008
SHEET: 40 OF 162
DRAWING: M–30

RECORD DRAWING

PLOT DATE: 2/6/2008 4:58 PM BY: AMEDINA

XREFs= L:\SDETAILS\1511500,..\SDETAILS\1511504R,..\SDETAILS\1545102R,..\SDETAILS\1509405R,..\SDETAILS\1509401R,L:\SDETAILS\1509201,L:\SDETAILS\1509203,L:\SDETAILS\1509205,..\SDETAILS\1509211R,..\200\PT–M–DB

File = O:\40406\40406–001\Drawings\MECH\40406M30 Saved by GDIAZ Save date = 1/30/2008 2:49 PM

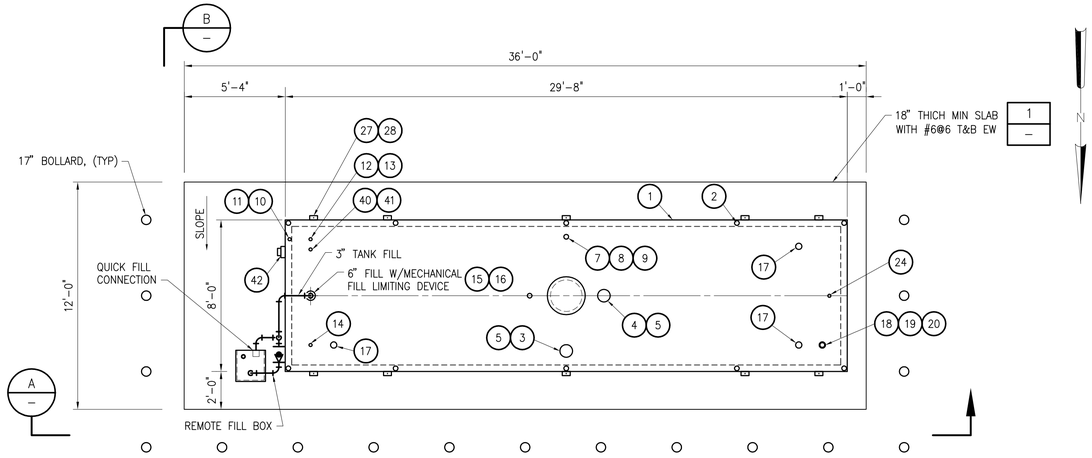

PLAN

1/4"=1'-0"

BILL OF MATERIALS					
ITEM	QTY	DESCRIPTION		VENDOR	NOTE
1	1	10,000 GALLON ENVIROVAULT	FAB		
2	11	3" C.S. WELD FLANGE FOR CONCRETE FILL	STK		SHIP WITH THREADED PLUG
3	1	8" FOR EMERGENCY VENT	STK		
4	1	8" FOR SECONDARY EMERGENCY VENT	STK		
5	2	EMERGENCY VENT	6193-1	MORRISON 24401-0600AV	
6	1	24" MANWAY	FAB		
7	1	3" FOR PRIMARY VENT RISER ASSEMBLY	STK		
8	1	3" VENT RISER SET @ 12' ABOVE GRADE	STK		SHIP LOOSE
9	1	UPDRAFT VENT	STK	EBW 800	SHIP LOOSE
10	1	2" FOR INTERSTITIAL LEAK SWITCH	STK		
11	1	LEAK SWITCH	6193-2	KRUEGER "AT-A-GLANCE"	
12	1	2" FOR VISUAL GAUGE	STK		
13	1	VISUAL GAUGE	6193-2	KRUEGER "THERMA-GAUGE"	
14	1	2" SPARE	STK		SHIP WITH GALV. THREADED CAP
15	1	6" FOR FILL	STK		
16	1	FILL LIMITER	6193-3	OPW FSTOP	
17	3	4" SPARE	STK		SHIP WITH GALV. THREADED CAP
18	1	4" FOR F.O.S.	STK		
19	1	4" C.S. COUPLING	STK		
20	1	4" X 1.5" DOUBLE TAP BUSHING	STK		
21	1	1.5" SUCTION TUBE (T.B.E.)	STK		
22	1	1.5" DOUBLE POPPET FOOT VALVE	6193-4	EBW	TERMINATED 1" FROM BOTTOM OF INNER TANK
23	1	ANTI-SIPHON VALVE WITH 0-5' ADJUSTABLE HEAD SPRING	STK	EBW	
24	1	2" FOR F.O.R.	STK		SHIP WITH PLASTIC THREAD PROTECTOR
25	7	1/4" X 2"H. X 5"W. X 96"L. FORMED EXTERNAL SUPPORT	FAB		
26	2	3/8" X 6"W. X 96"L. NEOPRENE PAD	STK		SHIP LOOSE
27	10	3" X 5"L. X. 2"H. S.S. MOUNTING CLIP WITH 1" DIAMETER HOLE	FAB		
28	5	3/8" x 6"W. X 102"L. NEOPRENE PAD	STK		SHIP LOOSE
29	2	10 GA. X 2" X 3" S.S. GROUNDING CLIP WITH (2) 7/16" DIAMETER HOLES ON 1" CENTER	FAB		TYP. AT EACH END OF TANK
30	1	8' GAUGE STICK	STK		SHIP LOOSE
31	1	PAINT TOUCH UP KIT (COLOR: WHITE)	6193-6		SHIP LOOSE
32	1	REMOTE S.S. FILL/SPILL CONTAINMENT BOX	6193-3	OPW 6211XLNRMOT	SHIP LOOSE (PIPING BY OTHERS)
33	1	3" BALL VALVE	6193-1	MORRISON 691	SHIP LOOSE (PIPING BY OTHERS)
34	1	DRY BREAK DISCONNECT	6193-3	OPW 1611AN-0300	SHIP LOOSE (PIPING BY OTHERS)
35	1	DUST CAP	6193-3	OPW 6348-0170	SHIP LOOSE (PIPING BY OTHERS)
36	1	3" VERTICAL CHECK VALVE	6193-1	MORRISON 158A	SHIP LOOSE (PIPING BY OTHERS)
37	1	HAND PUMP	6193-5	GASBOY 1720	SHIP LOOSE (PIPING BY OTHERS)
38	1	3/4" VERTICAL CHECK VALVE	6193-1	MORRISON 158A	SHIP LOOSE (PIPING BY OTHERS)
39	1	SET OF OFF-LOADING INSTRUCTION WITH TANK WARRANTY FORM			
40	1	2" FOR VISUAL GAUGE			
41	1	VISUAL GAUGE WITH HIGH LEVEL ALARM		MORRISON 918F	
42	1	S.S ALARM PANEL MOUNTING BRACKET			54" FROM GRADE

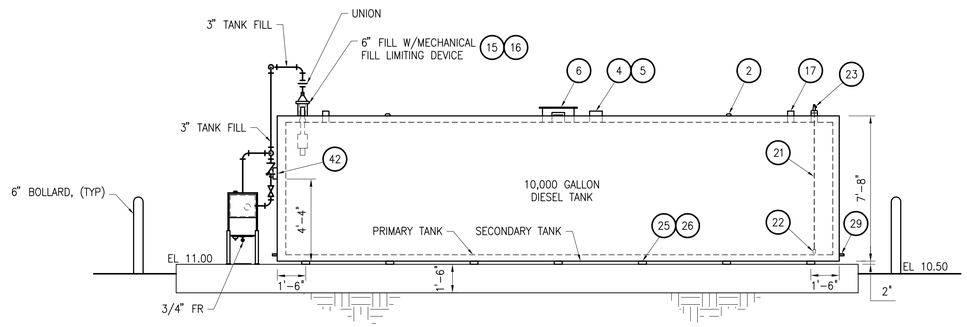

SECTION A

1/4"=1'-0"

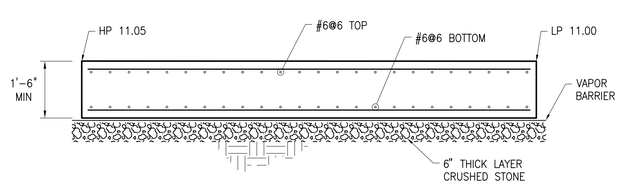

DETAIL 1

1/2"=1'-0"

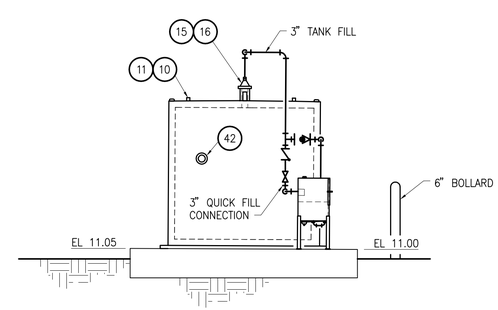

SECTION B

1/4"=1'-0"

1/4"=1'-0"

NO.	DATE	ISSUED FOR	BY
2	01/08	RECORD DRAWING	P.A.D.
1	10/03	BID SET	P.A.D.

DESIGNED D.M.L.
DRAWN T.B.
CHECKED P.A.D.
PROJ. ENGR. P.A.D.

PATRICK A. DAVIS P.E.
No. 37167

HAZEN AND SAWYER
Environmental Engineers & Scientists
4000 Hollywood Boulevard, Suite 750N
Hollywood, Florida 33021
Certificate of Authorization Number: 2771

SCALE 1/4"=1'-0"

CONTRACT: –
CLIENTS PROJECT:
ENGINEERS PROJECT: 40406
CAD REFERENCE: 40406M31

CITY OF HALLANDALE BEACH
UTILITIES DEPARTMENT

6 MGD MEMBRANE SOFTENING W.T.P.

FUEL STORAGE TANK
PLAN AND SECTIONS

DATE: JANUARY 2008
SHEET: 41 OF 162
DRAWING: M-31

RECORD DRAWING

RECD DATE: 2/11/2008 8:59 AM BY: AMEDINA

XREFs=

File = O:\40406\40406-001\Drawings\MECH\40406M31 Saved by GDIAZ Save date = 1/30/2008 2:50 PM

INSTRUMENT AND FUNCTION SYMBOLS

	FIELD MOUNT	PRIMARY LOCATION NORMALLY ACCESSIBLE TO OPERATOR	AUXILIARY LOCATION NORMALLY ACCESSIBLE TO OPERATOR	NORMALLY INACCESSIBLE BEHIND THE PANEL DEVICES OR FUNCTIONS
SUPERVISORY COMPUTER FUNCTION		XXX 000	XXX 000	XXX 000
SHARED DISPLAY, SHARED CONTROL (HMI)		XXX 000	XXX 000	XXX 000
PROGRAMMABLE LOGIC CONTROL	XXX 000	XXX 000	XXX 000	XXX 000
DISCRETE INSTRUMENTS	XXX 000	XXX 000	XXX 000	XXX 000

SINGLE INSTRUMENT OR OTHER COMPONENT HAVING MULTIPLE FUNCTIONS OR SHARING A COMMON HOUSING

(XXX) (YYY) — SOFTWARE LOGIC OR CONTROL FUNCTION (XXX) RESIDENT IN DISTRIBUTED CONTROL SYSTEM (DCS) AT PROGRAMMABLE LOGIC CONTROLLER (PLC) (YYY) REFER TO CONTRACT DOCUMENTS FOR CONTROL LOGIC DESCRIPTIONS.

(ZZZ) — DESIGNATIONS OF CONTROL FUNCTIONS (ZZZ) ASSOCIATED WITH INSTRUMENT OR OTHER COMPONENTS.

AHC – AUTO/HOLD/CLOSE
AM – AUTO/MANUAL
DEV – DEVIATION
HOA – HAND/OFF/AUTO
HOR – HAND/OFF/REMOTE
LOS – LOCKOUT STOP
LR – LOCAL/REMOTE
OO – ON / OFF
OCA – OPEN/CLOSE/AUTO
OSC – OPEN/STOP/CLOSED
POT – POTENTIOMETER
RL – RAISE/LOWER
RSL – RAISE/STOP/LOWER
SD – SHUTDOWN
SEL – SELECT
SP – SET POINT
SR – START/RESET
SS – STOP/START

FY — INSTRUMENT PANEL MOUNTED WITH COMPUTING OR CONVERTING FUNCTION

CONVERT

E – VOLTAGE
I – CURRENT
P – PNEUMATIC
A – ANALOG
B – BINARY
H – HYDRAULIC
O – ELECTROMAGNETIC, SONIC
R – RESISTANCE (ELECT.)
D – DIGITAL

COMPUTE

SUMMING
SUBTRACTOR
MUTIPLYING
DIVIDING
ROOT EXTRACTION
PROPORTIONAL
DERIVATIVE
AVERAGING
RATIO
DIFFERENCE
HIGH SELECTING
LOW SELECTING
INTEGRAL
PID

(XXX) — PANEL MOUNTED PILOT LIGHT WITH PANEL NUMBER DESIGNATION(i.e. XXX = 100, 200, ETC.).

ANALYTICAL

AIT XXXX — ANALYSIS INDICATING TRANSMITTER

XXXX =
ALK – ALKALINITY
CL 2 – CHLORINE CONCENTRATION
COMB – COMBUSTABLE GAS
CON – CONDUCTIVITY
DO – DISSOLVED OXYGEN
H 2 S – HYDROGEN SULFIDE
LEL – LOWER EXPLOSIVE LIMIT
O 2 – OXYGEN CONCENTRATION
O 3 – OZONE
ORP – OXIDATION/REDUCTION POTENTIAL
PH – HYDROGEN ION CONCENTRATION
SO 2 – SULFUR DIOXIDE
TH – TOTAL HARDNESS
TURB – TURBIDITY
UV – ULTRA VIOLET

VALVE SYMBOLS

BUTTERFLY
GLOBE
ROTARY VALVE
ANGLE
SWING CHECK VALVE
BALL CHECK VALVE
GATE VALVE
PLUG VALVE
PINCH VALVE
BALL VALVE
VACUUM RELIEF VALVE (PSV)
PRESSURE RELIEF OR SAFETY VALVE (PSV)
SOLENOID VALVE (S)
BACKPRESSURE REGULATOR (PCV)
BACKFLOW PREVENTOR
PRESSURE-REDUCING REGULATOR (PCV)
NEEDLE VALVE
3-WAY VALVE (GENERAL)
DIAPHRAM OR PINCH VALVE
HAND OPERATED DIAPHRAGM VALVE
COMBINATION VACUUM AND PRESSURE RELIEF VALVE
PRESSURE-REDUCING REGULATOR, SELF-CONTAINED, WITH HANDWHEEL ADJUSTABLE SET POINT
CALIBRATION CYLINDER
PULSATION DAMPENER
BALL VALVE (3 WAY)

VALVE ACTUATORS

SOLENOID
PREFERED FOR DIAPHRAGM ASSEMBLED WITH PILOT. ONE INPUT SHOWN (TYPICALLY WITH ELECTRIC INPUT)
DIAPHRAGM PRESSURE-BALANCED
ELECTROHYDRAULIC
DIGITAL
ROTARY MOTOR (SHOWN TYPICALLY WITH ELECTRIC SIGNAL. MAY BE HYDRAULIC OR PNEUMATIC)
VALVE ACTUATOR ELECTRO-PNEUMATIC CONVERTER (XXX 9999)
WITH OR WITHOUT POSITIONER OR OTHER PILOT
TWO-WAY VALVE, FAIL CLOSED
DIAPHRAGM, SPRING-OPPOSED, WITH POSITIONER (IA, S)

FLOW AND PRESSURE

MAGNETIC FLOWMETER (M)
VORTEX SENSOR
PADDLE WHEEL
SONIC FLOWMETER "DOPPLER" OR "TRANSIT TIME" MAY BE ADDED
PRESSURE INDICATOR WITH WITH ISOLATING RING SEAL (PI)
PRESSURE INDICATOR WITH DIAPHRAGM (CHEMICAL) SEAL (PI)
VARIABLE AREA INDICATING ROTAMETER(R) (FI)
ORIFICE PLATE (MOUNTED IN FLANGE UNION) (FE)
VENTURI/INSERT TYPE FLOW TUBE (FE)
TURBINE-OR PROPELLER TYPE PRIMARY ELEMENT (FE)
POSITIVE-DISPLACEMENT-TYPE FLOW TOTALIZING INDICATOR (FQI)
SINGLE PORT PITOT TUBE PITOT VENTURI TUBE (FE)
FLUME
WEIR

NOTES

1. ADDITIONAL INSTRUMENTATION AND CONTROL SYMBOLS MAY BE USED AS REQUIRED. SYMBOLS AND NOMENCLATURE ARE BASED ON ISA STANDARDS S5.1, S5.2, S5.4.
2. SEE ASSOCIATED ELECTRICAL AND MECHANICAL SYMBOL SHEETS FOR ADDITIONAL SYMBOLS AND ABBREVIATIONS.
3. POWER SUPPLIES FOR LOOPS OR SYSTEMS SHALL BE FURNISHED BY THE INSTRUMENTATION SUPPLIER TO MEET THE PARTICULAR CHARACTERISTICS (E.G. VOLTAGE AND CURRENT REQUIREMENTS) OF COMPONENTS IN EACH LOOP OR SYSTEM.

PUMP AND COMPRESSOR SYMBOLS

CENTRIFUGAL PUMP (M)
PROGRESSIVE CAVITY PUMP (M)
CENTRIFUGAL WET PIT PUMP OR TURBINE PUMP (M)
COMPRESSOR (CENTRIFUGAL), OR TURBINE MOTOR
EJECTOR
PISTON PUMP
DIAPHRAGM PUMP
COMPRESSOR (PISTON)
GEAR PUMP OR BLOWER (POSITIVE DISPLACMENT)
VERTICAL PUMP (M)
CHEMICAL FEED PUMP
BLOWER(CENTRIFUGAL)
SUBMERSIBLE SUMP PUMP OR SAMPLE PUMP (M)
SCREW PUMP

MISCELLANEOUS SYMBOLS

DIAPHRAGM SEAL
BLIND FLANGE
FILTER
MIXER (OR M)
AIR GAP
ELECTRIC MOTOR (M)
VENT TO ATMOSPHERE
RADIO ANTENNA
DRAIN (D)
PIPE MATERIAL CHANGE
HORN
ANNULAR DIAPHRAGM SEAL
EXPANSION TANK
SAMPLE TAP
RUPTURE DISK

POSITION

POSITION TRANSMITTER (ZT)
LIMIT SWITCH THAT IS ACTUATED WHEN VALVE IS CLOSED TO A PRE-DETERMINED POSITION (ZSC)

	FIRST-LETTER		SUCCEEDING-LETTERS		
	MEASURED OR INITIATING VARIABLE	MODIFIER	READOUT OR PASSIVE FUNCTION	OUTPUT FUNCTION	MODIFIER
A	ANALYSIS	RUNNING	ALARM		
B	BURNER, COMBUSTION	READY			
C				CONTROL	CLOSED
D		DIFFERENTIAL			
E	VOLTAGE		SENSOR (PRIMARY ELEMENT)		
F	FLOW RATE	RATIO (FRACTION)			
G	GAUGE		GLASS, VIEWING DEVICE		
H	HAND				HIGH
I	CURRENT (ELECTRICAL)		INDICATE		
J	POWER	SCAN			
K	TIME, TIME SCHEDULE	TIME RATE OF CHANGE		CONTROL STATION	
L	LEVEL		LIGHT		LOW
M		MOMENTARY			MIDDLE, INTERMEDIATE
N	TORQUE				
O			ORIFICE,RESTRICTION		OPEN
P	PRESSURE, VACUUM		POINT (TEST) CONNECTION		
Q	QUANTITY	INTEGRATE, TOTALIZE			
R	RADIATION		RECORD & STORE	REPORT	
S	SPEED, FREQUENCY	SAFETY		SWITCH	
T	TEMPERATURE			TRANSMIT	
U	MULTIVARIABLE		MULTIFUNCTION	MULTIFUNCTION	MULTIFUNCTION
V	VIBRATION, VOLUME MECHANICAL ANALYSIS			VALVE, DAMPER, LOUVER	
W	WEIGHT, FORCE		WELL		
X	FAILURE OR TROUBLE	X AXIS			
Y	EVENT, STATE OR PRESENCE	Y AXIS		COMPUTE,CONVERT, RELAY	
Z	POSITION, DIMENSION	Z AXIS		DRIVER,ACTUATOR,FINAL CONTROL ELEMENT	

LINE SYMBOLS AND LEGEND

MAJOR PROCESS PIPES OR CHANNELS
SECONDARY PROCESS OR MECHANICAL CONNECTION
UNDEFINED SIGNAL
AIR SUPPLY OR SIGNAL
ELECTRICAL SIGNAL
INTERNAL SOFTWARE/DATA LINK
PROCESS/SIGNALS NOT CONNECTED (CROSSING)
PROCESS/SIGNALS CONNECTED
TERMINATION POINT(S) TO FUTURE EQUIPMENT
DWG. No. / DWG. No. — TIE-IN CONTINUED ELSEWHERE AS INDICATED
FIBER OPTIC
EXISTING INSTRUMENTATIONS
TO BE DEMOLISHED
TO BE CONVERTED

SAMPLE LOOP DIAGRAM ISA EXPANDED FORMAT

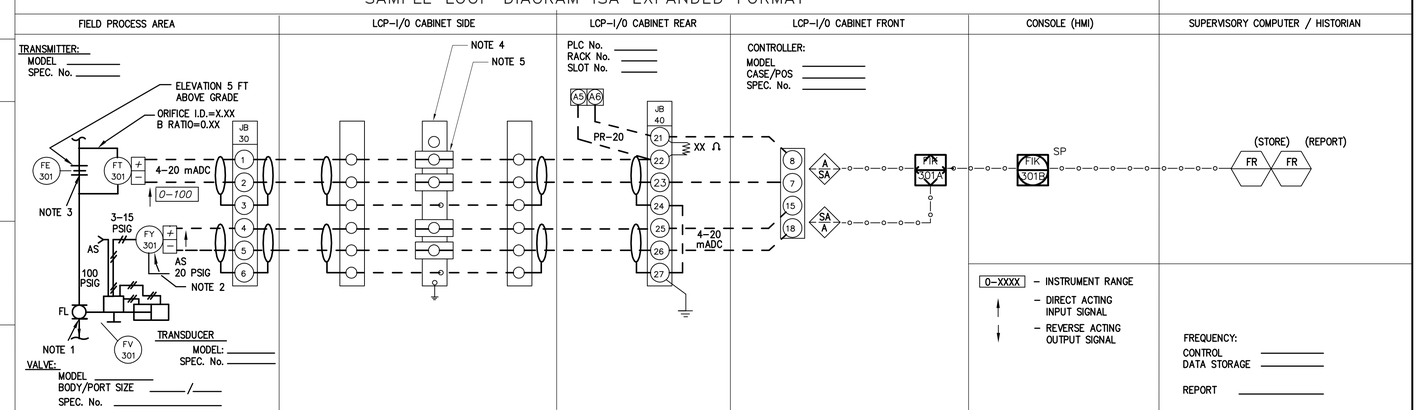

NOTES:
1. FV-301 FULLY OPEN AT 3 PSIG AND FULLY CLOSED AT 15 PSIG.
2. STAND MOUNT PER INSTRUMENT STANDARD, BUT NOT ON THE CONTROL VALVE.
3. FE-301 REQUIRES 10 PIPE DIAMETERS UPSTREAM AND 5 PIPE DIAMETERS DOWNSTREAM OF STRAIGHT PIPE.
4. COPPER BUS BAR, DRILLED AN TAPPED FOR GROUND CONNECTIONS
5. LIGHTNING AND SURGE ARRESTOR

NO.	DATE	ISSUED FOR	BY
2	01/08	RECORD DRAWING	P.A.D.
1	10/03	BID SET	L.P.A.

DESIGNED D.M.L.
DRAWN J.M.B.
CHECKED L.P.A.
PROJ. ENGR. P.A.D.

LUIS P. AMARAL P.E.
No. 47573

HAZEN AND SAWYER
Environmental Engineers & Scientists
4000 Hollywood Boulevard, Suite 750N
Hollywood, Florida 33021
Certificate of Authorization Number: 2771

SCALE N.T.S.

CONTRACT: –
CLIENTS PROJECT:
ENGINEERS PROJECT: 40406
CAD REFERENCE: 40406I01

CITY OF HALLANDALE BEACH
UTILITIES DEPARTMENT

6 MGD MEMBRANE SOFTENING W.T.P.

INSTRUMENTATION AND CONTROL SYMBOLS AND LEGEND

DATE: JANUARY 2008
SHEET: 42 OF 162
DRAWING: I-1

RECORD DRAWING

PLOT DATE: 2/11/2008 9:59 AM BY: AMEDINA

XREFs:

File = O:\40406\40406-001\Drawings\INSTR\40406I01 Saved by GDIAZ Save date = 1/30/2008 2:51 PM

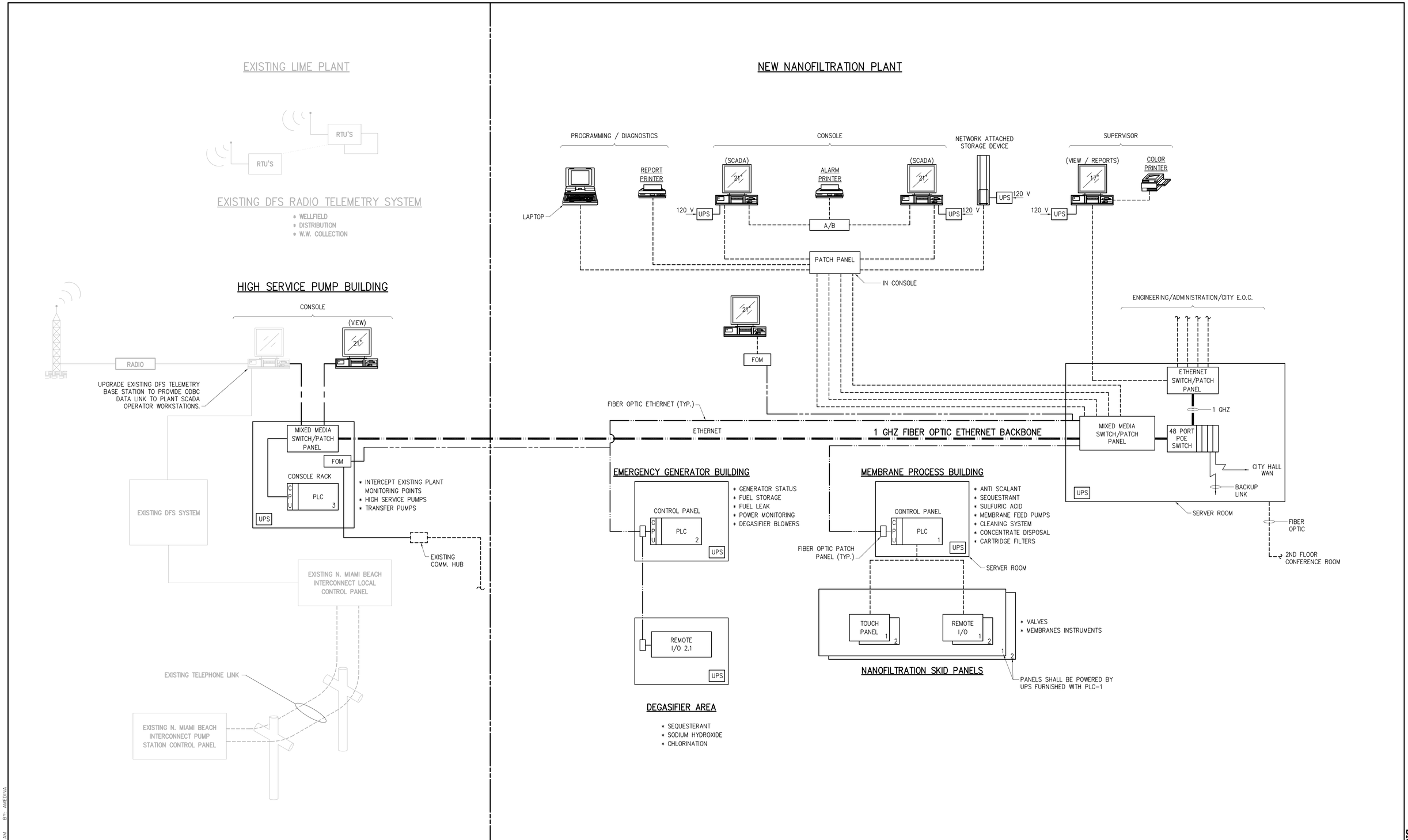

NO.	DATE	ISSUED FOR	BY
2	01/08	RECORD DRAWING	P.A.D.
1	10/03	BID SET	L.P.A.

DESIGNED G.W.B.
DRAWN J.J.S.
CHECKED L.P.A.
PROJ. ENGR. P.A.D.

LUIS P. AMARAL P.E.
No. 47573

HAZEN AND SAWYER
Environmental Engineers & Scientists
4000 Hollywood Boulevard, Suite 750N
Hollywood, Florida 33021
Certificate of Authorization Number: 2771

SCALE NONE

CONTRACT: –
CLIENTS PROJECT:
ENGINEERS PROJECT: 40406
CAD REFERENCE: 40406I02

CITY OF HALLANDALE BEACH
UTILITIES DEPARTMENT

6 MGD MEMBRANE SOFTENING W.T.P.

INSTRUMENTATION AND CONTROL

CONTROL SYSTEM BLOCK DIAGRAM

DATE: JANUARY 2008
SHEET: 43 OF 162
DRAWING: I-2

RECORD DRAWING

PLOT DATE: 2/11/2008 10:00 AM BY: AMEDINA

XREFs=

File = O:\40406\40406-001\Drawings\INSTR\40406I02 Saved by GDIAZ Save date = 1/30/2008 2:52 PM

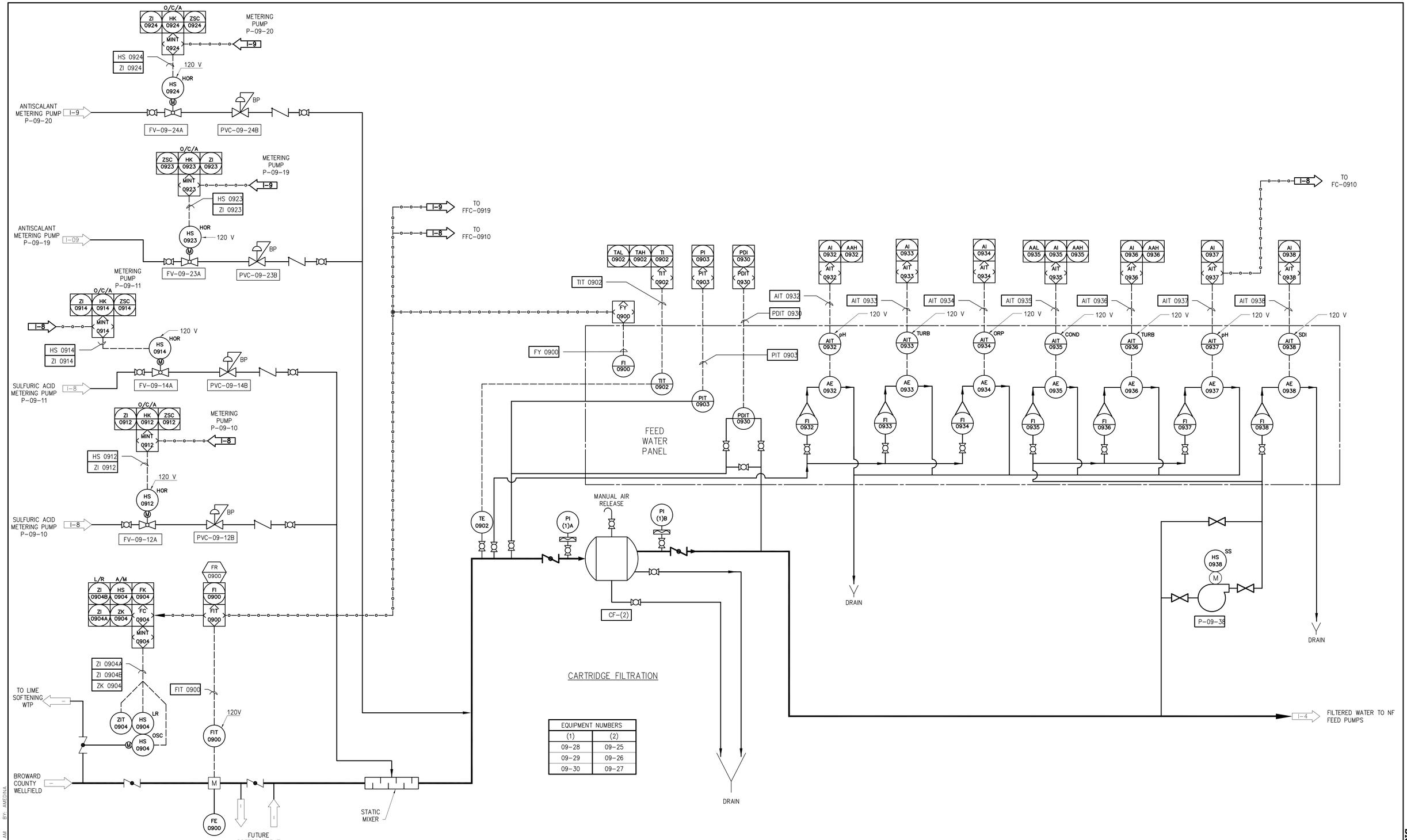

EQUIPMENT NUMBERS	
(1)	(2)
09-28	09-25
09-29	09-26
09-30	09-27

NO.	DATE	ISSUED FOR	BY
2	01/08	RECORD DRAWING	P.A.D.
1	10/03	BID SET	L.P.A.

XREFs=

DESIGNED D.M.L.
DRAWN J.M.B.
CHECKED L.P.A.
PROJ. ENGR. P.A.D.

LUIS P. AMARAL P.E.
No. 47573

HAZEN AND SAWYER
Environmental Engineers & Scientists
4000 Hollywood Boulevard, Suite 750N
Hollywood, Florida 33021
Certificate of Authorization Number: 2771

SCALE NONE

CONTRACT: –
CLIENTS PROJECT:
ENGINEERS PROJECT: 40406
CAD REFERENCE: 40406I03

CITY OF HALLANDALE BEACH
UTILITIES DEPARTMENT

6 MGD MEMBRANE SOFTENING W.T.P.

INSTRUMENTATION AND CONTROL
PRETREATMENT

DATE: JANUARY 2008
SHEET: 44 OF 162
DRAWING: I-3

RECORD DRAWING

PLOT DATE: 2/11/2008 10:00 AM BY: AMEDINA

File = O:\40406\40406-001\Drawings\INSTR\40406I03 Saved by GDIAZ Save date = 1/30/2008 2:53 PM

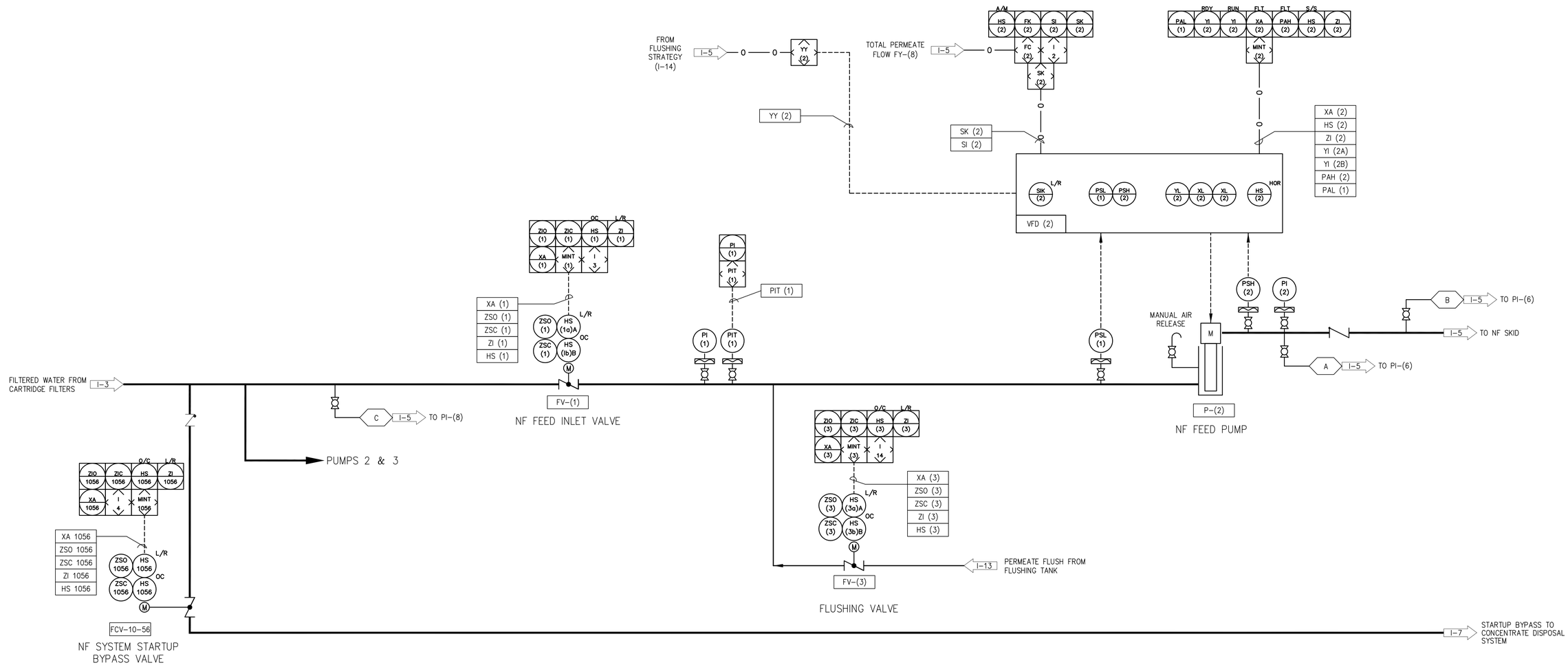

EQUIPMENT NUMBERS			
SKID No.	(1)	(2)	(3)
1	1051	1001	1054
2	1052	1002	1055
3 (FUTURE)	1053	1003	1056

NO.	DATE	ISSUED FOR	BY
2	01/08	RECORD DRAWING	P.A.D.
1	10/03	BID SET	L.P.A.

DESIGNED D.M.L.
DRAWN J.M.B.
CHECKED L.P.A.
PROJ. ENGR. P.A.D.

LUIS P. AMARAL P.E.
No. 47573

HAZEN AND SAWYER
Environmental Engineers & Scientists
4000 Hollywood Boulevard, Suite 750N
Hollywood, Florida 33021
Certificate of Authorization Number: 2771

SCALE NONE

CONTRACT: –
CLIENTS PROJECT:
ENGINEERS PROJECT: 40406
CAD REFERENCE: 40406I04

CITY OF HALLANDALE BEACH
UTILITIES DEPARTMENT

6 MGD MEMBRANE SOFTENING W.T.P.

INSTRUMENTATION AND CONTROL
NF FEED WATER
INLET VALVES / FEED PUMPS

DATE: JANUARY 2008
SHEET: 45 OF 162
DRAWING: I-4

RECORD DRAWING

PLOT DATE: 2/11/2008 10:19 AM BY: AMEDINA

XREFs=

File = O:\40406\40406-001\Drawings\INSTR\40406I04 Saved by GDIAZ Save date = 1/30/2008 2:54 PM

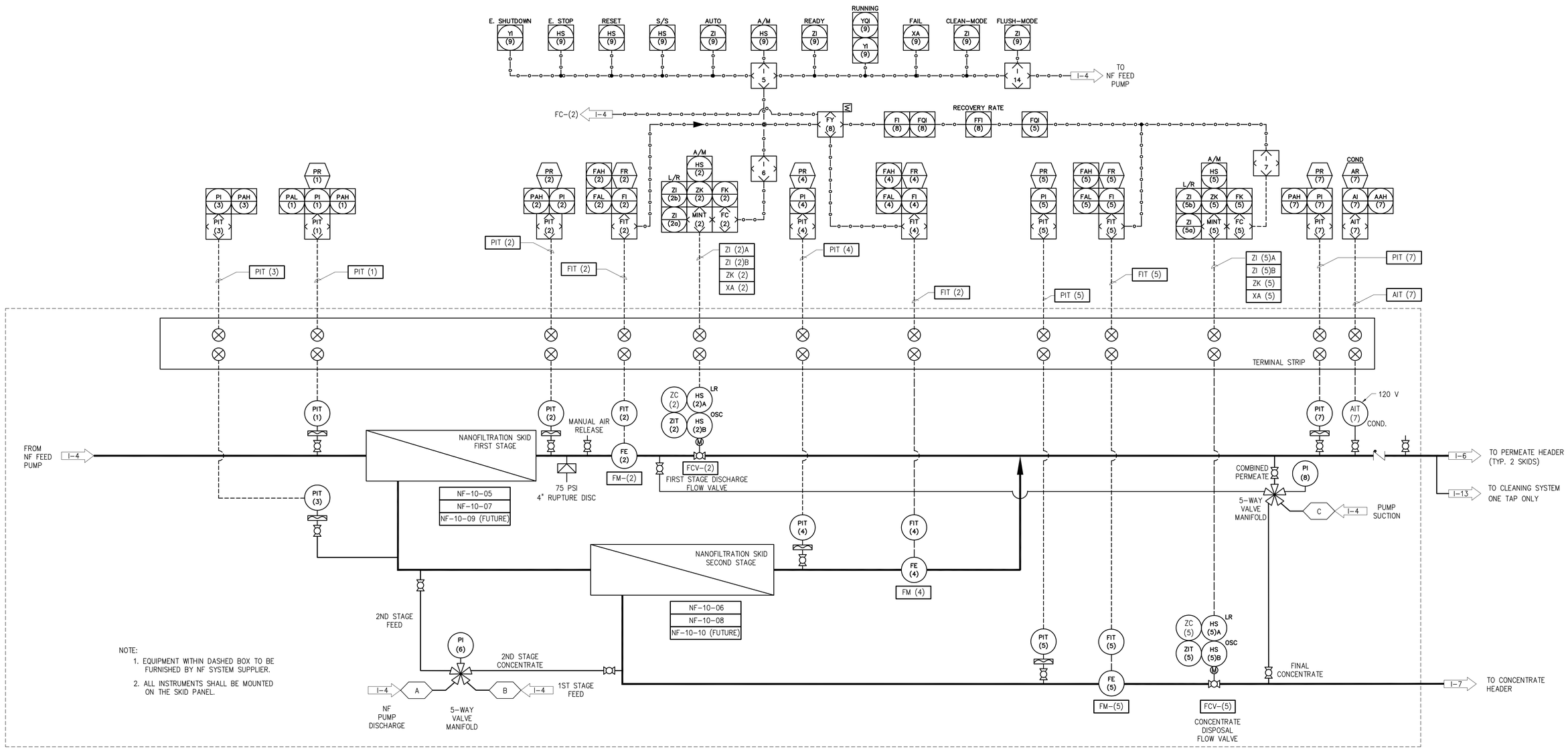

NOTE:

1. EQUIPMENT WITHIN DASHED BOX TO BE FURNISHED BY NF SYSTEM SUPPLIER.
2. ALL INSTRUMENTS SHALL BE MOUNTED ON THE SKID PANEL.

SKID No.	(1)	(2)	(3)	(4)	(5)	(6)	(7)	(8)	(9)
1	1061	1065	1071	1075	1081	1085	1091	1095	1011
2	1062	1066	1072	1076	1082	1086	1092	1096	1012
3 (FUTURE)	1063	1067	1073	1077	1083	1087	1093	1097	1013

NO.	DATE	ISSUED FOR	BY
2	01/08	RECORD DRAWING	P.A.D.
1	10/03	BID SET	L.P.A.

DESIGNED D.M.L.
DRAWN J.M.B.
CHECKED L.P.A.
PROJ. ENGR. P.A.D.

LUIS P. AMARAL P.E.
No. 47573

HAZEN AND SAWYER
Environmental Engineers & Scientists
4000 Hollywood Boulevard, Suite 750N
Hollywood, Florida 33021
Certificate of Authorization Number: 2771

SCALE NONE

CONTRACT: –
CLIENTS PROJECT:
ENGINEERS PROJECT: 40406
CAD REFERENCE: 40406I05

CITY OF HALLANDALE BEACH
UTILITIES DEPARTMENT

6 MGD MEMBRANE SOFTENING W.T.P.

INSTRUMENTATION AND CONTROL

NF UNITS

DATE: JANUARY 2008
SHEET: 46 OF 162
DRAWING: I-5

RECORD DRAWING

PLOT DATE: 2/11/2008 10:19 AM BY: AMEDINA

XREFs=

File = O:\40406\40406-001\Drawings\INSTR\40406I05 Saved by GDIAZ Save date = 1/30/2008 2:55 PM

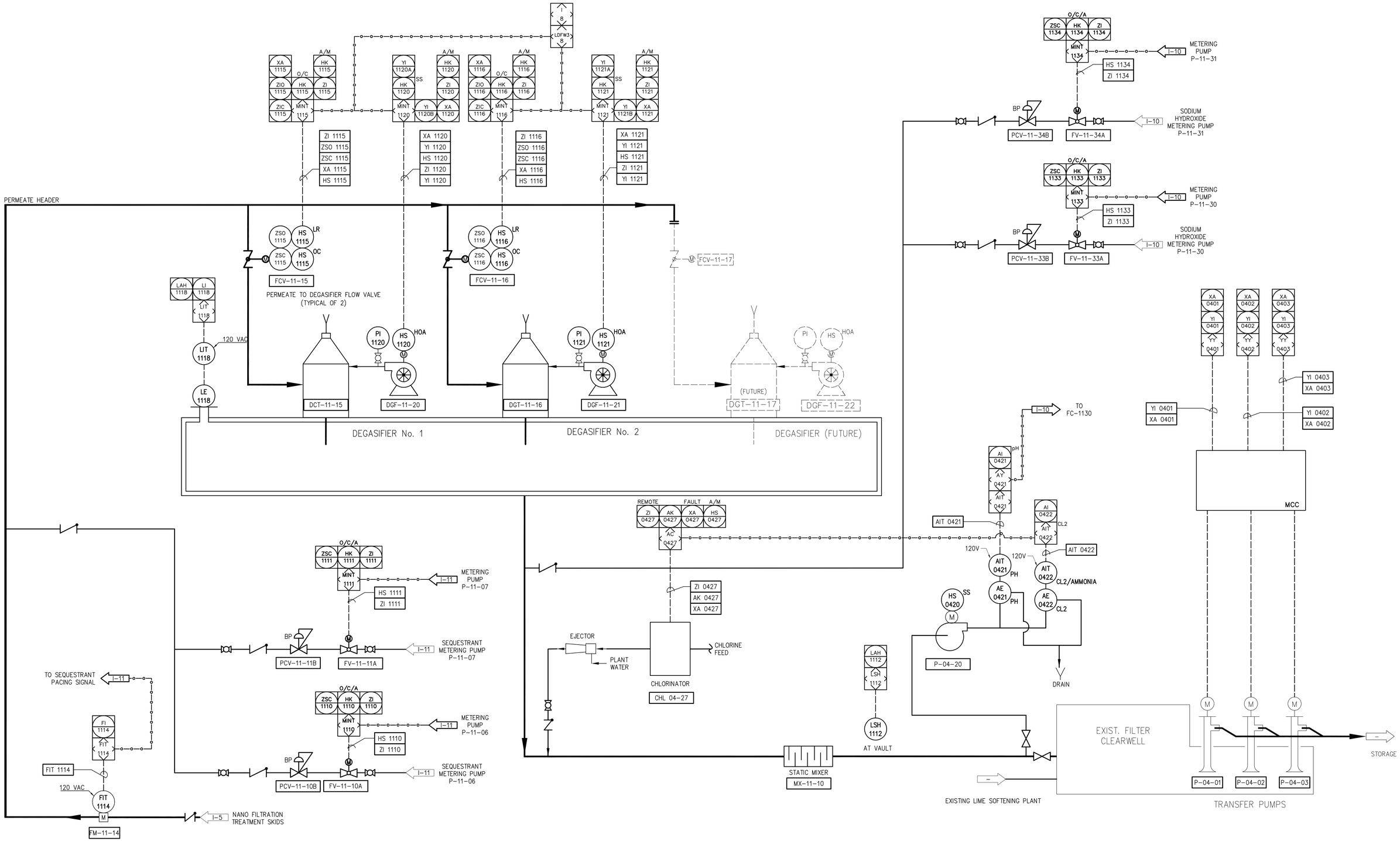

NO.	DATE	ISSUED FOR	BY
2	01/08	RECORD DRAWING	P.A.D.
1	10/03	BID SET	L.P.A.

DESIGNED D.M.L.
DRAWN J.M.B.
CHECKED L.P.A.
PROJ. ENGR. P.A.D.

LUIS P. AMARAL P.E.
No. 47573

HAZEN AND SAWYER
Environmental Engineers & Scientists
4000 Hollywood Boulevard, Suite 750N
Hollywood, Florida 33021
Certificate of Authorization Number: 2771

SCALE: NONE

CONTRACT: –
CLIENTS PROJECT:
ENGINEERS PROJECT: 40406
CAD REFERENCE: 40406I06

CITY OF HALLANDALE BEACH
UTILITIES DEPARTMENT

6 MGD MEMBRANE SOFTENING W.T.P.

INSTRUMENTATION AND CONTROL
DEGASIFIERS

DATE: JANUARY 2008
SHEET: 47 OF 162
DRAWING: I-6

RECORD DRAWING

PLOT DATE: 2/11/2008 10:19 AM BY: AMEDINA

XREFs:

File = O:\40406\40406-001\Drawings\INSTR\40406I06 Saved by GDIAZ Save date = 1/30/2008 2:56 PM

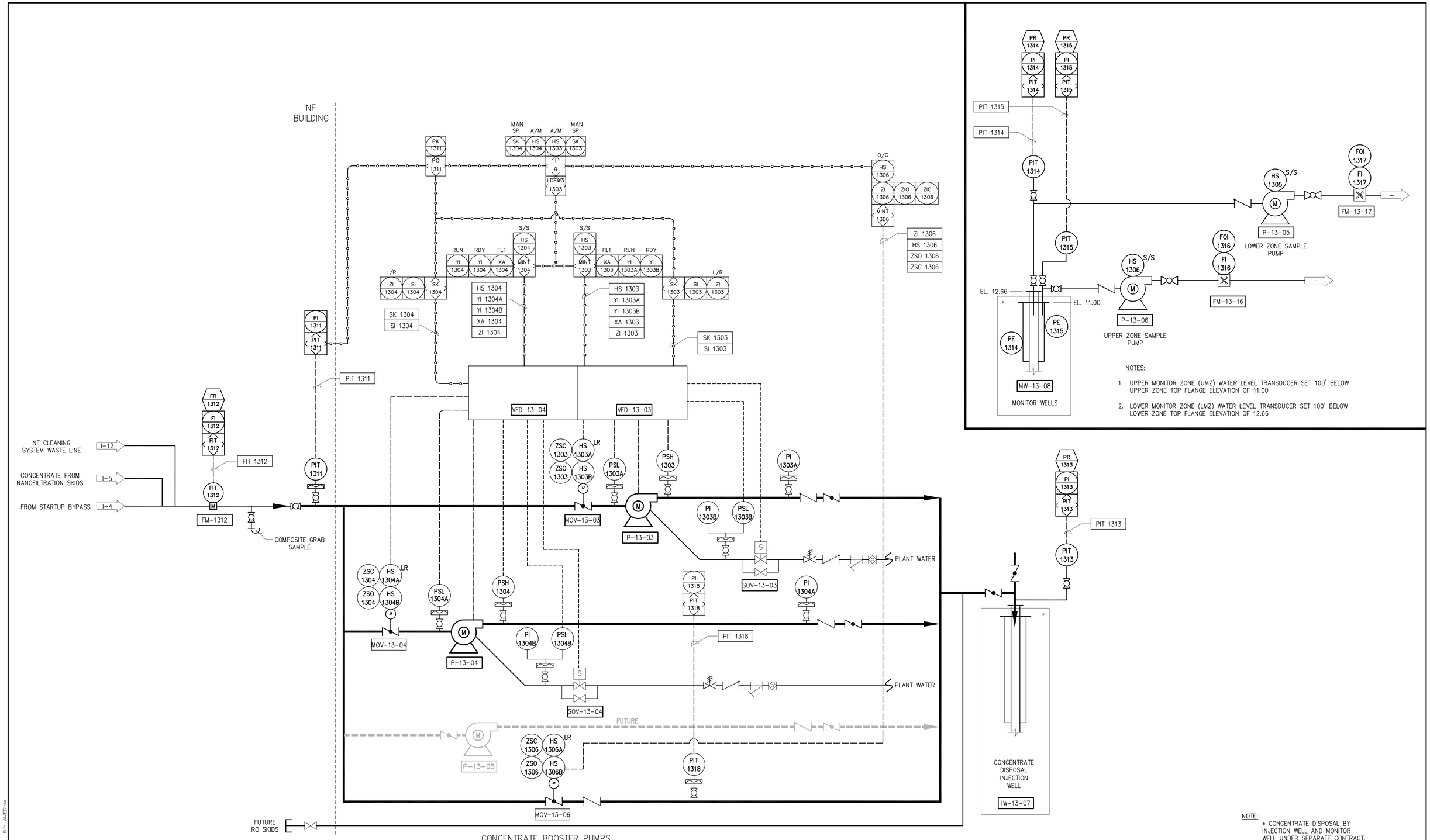

NO.	DATE	ISSUED FOR	BY
2	01/08	RECORD DRAWING	P.A.D.
1	10/03	BID SET	L.P.A.

XREFs=

DESIGNED D.M.L.
DRAWN J.M.B.
CHECKED L.P.A.
PROJ. ENGR. P.A.D.

LUIS P. AMARAL P.E.
No. 47573

HAZEN AND SAWYER
Environmental Engineers & Scientists
4000 Hollywood Boulevard, Suite 750N
Hollywood, Florida 33021
Certificate of Authorization Number: 2771

SCALE
NONE

CONTRACT: –
CLIENTS PROJECT:
ENGINEERS PROJECT: 40406
CAD REFERENCE: 40406I07

CITY OF HALLANDALE BEACH
UTILITIES DEPARTMENT

6 MGD MEMBRANE SOFTENING W.T.P.

INSTRUMENTATION AND CONTROL CONCENTRATE INJECTION AND MONITORING WELLS

DATE: JANUARY 2008
SHEET: 48 OF 162
DRAWING: I-7

RECORD DRAWING

PLOT DATE: 2/11/2008 10:19 AM BY: AMEDINA

File = O:\40406\40406-001\Drawings\INSTR\40406I07 Saved by GDIAZ Save date = 1/30/2008 2:57 PM

SHOWER / EYEWASH	
LOCATION	TAG No. (1)
LABORATORY AREA	0999
INSIDE SODIUM HYDROXIDE AREA	1191
INSIDE SEQUESTRANT AREA	1190
INSIDE ANTISCALANT AREA	0991
INSIDE – SULFURIC AREA	0990
OUTSIDE SEQUESTRANT/SODIUM HYDROXIDE FILL AREA	1192
OUTSIDE – ANITSCALANT/SULFURIC FILL AREA	0992

SHOWER / EYEWASH DETAIL

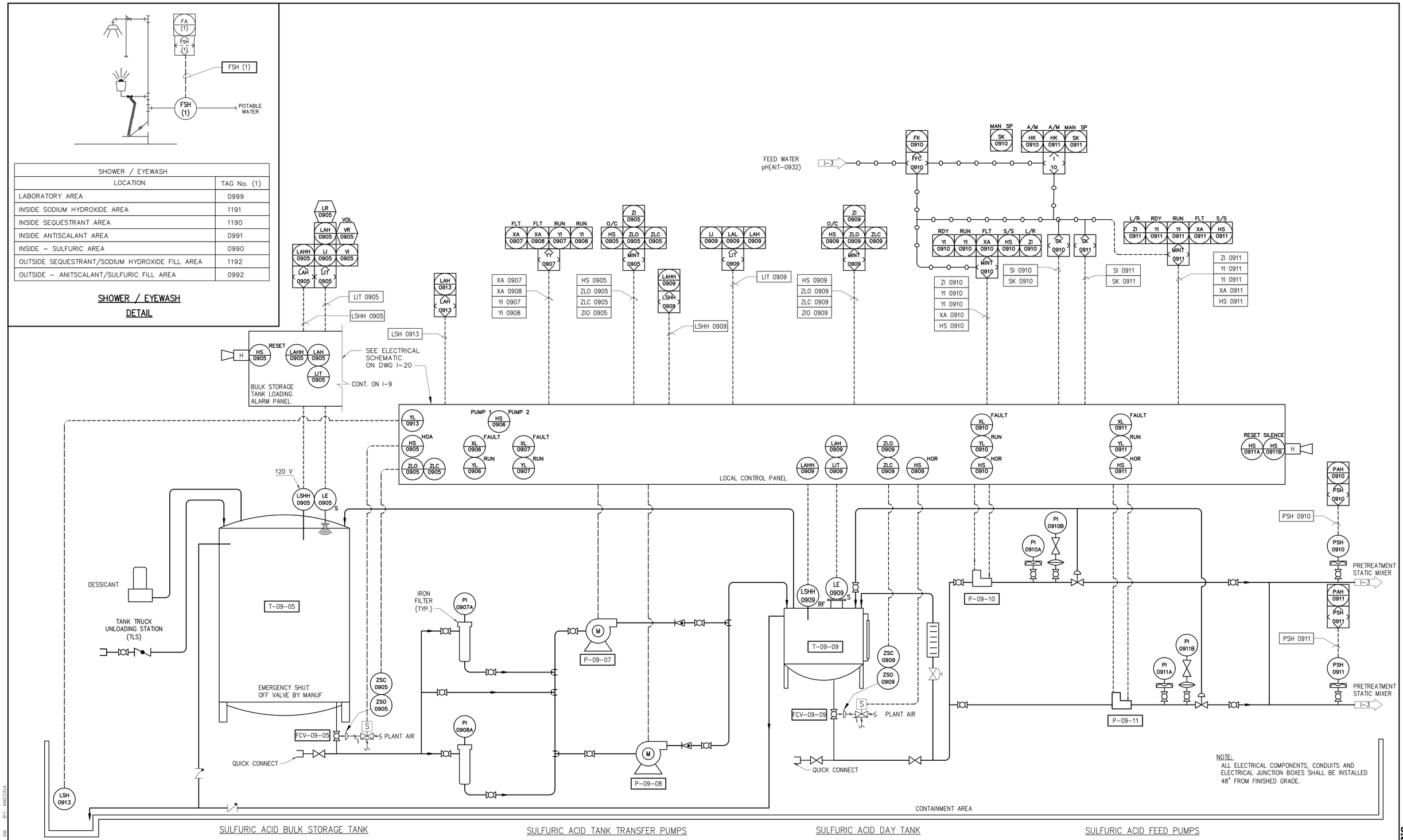

NOTE:
ALL ELECTRICAL COMPONENTS, CONDUITS AND ELECTRICAL JUNCTION BOXES SHALL BE INSTALLED 48" FROM FINISHED GRADE.

NO.	DATE	ISSUED FOR	BY
2	01/08	RECORD DRAWING	P.A.D.
1	04/04	BID SET	L.P.A.

DESIGNED D.M.L.
DRAWN J.M.B.
CHECKED L.P.A.
PROJ. ENGR. P.A.D.

LUIS P. AMARAL P.E.
No. 47573

HAZEN AND SAWYER
Environmental Engineers & Scientists
4000 Hollywood Boulevard, Suite 750N
Hollywood, Florida 33021
Certificate of Authorization Number: 2771

SCALE: NONE

CONTRACT: –
CLIENTS PROJECT:
ENGINEERS PROJECT: 40406
CAD REFERENCE: 40406I08

CITY OF HALLANDALE BEACH
UTILITIES DEPARTMENT

6 MGD MEMBRANE SOFTENING W.T.P.

INSTRUMENTATION AND CONTROL
SULFURIC ACID SYSTEM

DATE: JANUARY 2008
SHEET: 49 OF 162
DRAWING: I-8

RECORD DRAWING

PLOT DATE: 2/11/2008 10:19 AM BY: AMEDINA

XREFs:

File = O:\40406\40406-001\Drawings\INSTR\40406I08 Saved by GDIAZ Save date = 1/30/2008 2:58 PM

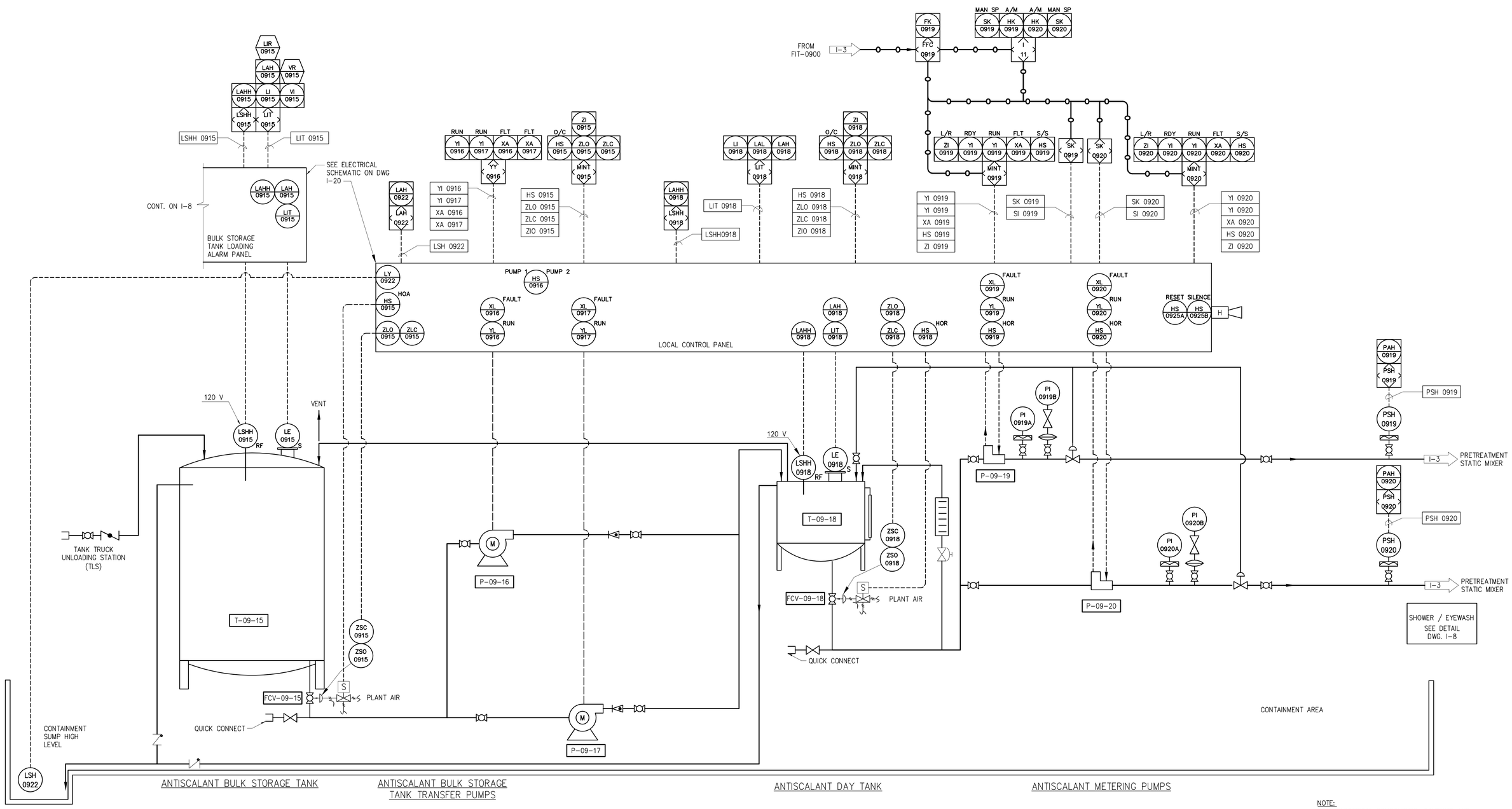

NOTE:
ALL ELECTRICAL COMPONENTS, CONDUITS AND ELECTRICAL JUNCTION BOXES SHALL BE INSTALLED 48" FROM FINISHED GRADE.

NO.	DATE	ISSUED FOR	BY
2	01/08	RECORD DRAWING	P.A.D.
1	10/03	BID SET	L.P.A.

DESIGNED D.M.L.
DRAWN J.M.B.
CHECKED L.P.A.
PROJ. ENGR. P.A.D.

LUIS P. AMARAL P.E.
No. 47573

HAZEN AND SAWYER
Environmental Engineers & Scientists
4000 Hollywood Boulevard, Suite 750N
Hollywood, Florida 33021
Certificate of Authorization Number: 2771

SCALE N.T.S.

CONTRACT: –
CLIENTS PROJECT:
ENGINEERS PROJECT: 40406
CAD REFERENCE: 40406I09

CITY OF HALLANDALE BEACH
UTILITIES DEPARTMENT

6 MGD MEMBRANE SOFTENING W.T.P.

INSTRUMENTATION AND CONTROL
ANTISCALANT SYSTEM

DATE: JANUARY 2008
SHEET: 50 OF 162
DRAWING: I-9

RECORD DRAWING

PLOT DATE: 2/11/2008 10:19 AM BY: AMEDINA
XREFs=
File = O:\40406\40406-001\Drawings\INSTR\40406I09 Saved by GDIAZ Save date = 1/30/2008 3:04 PM

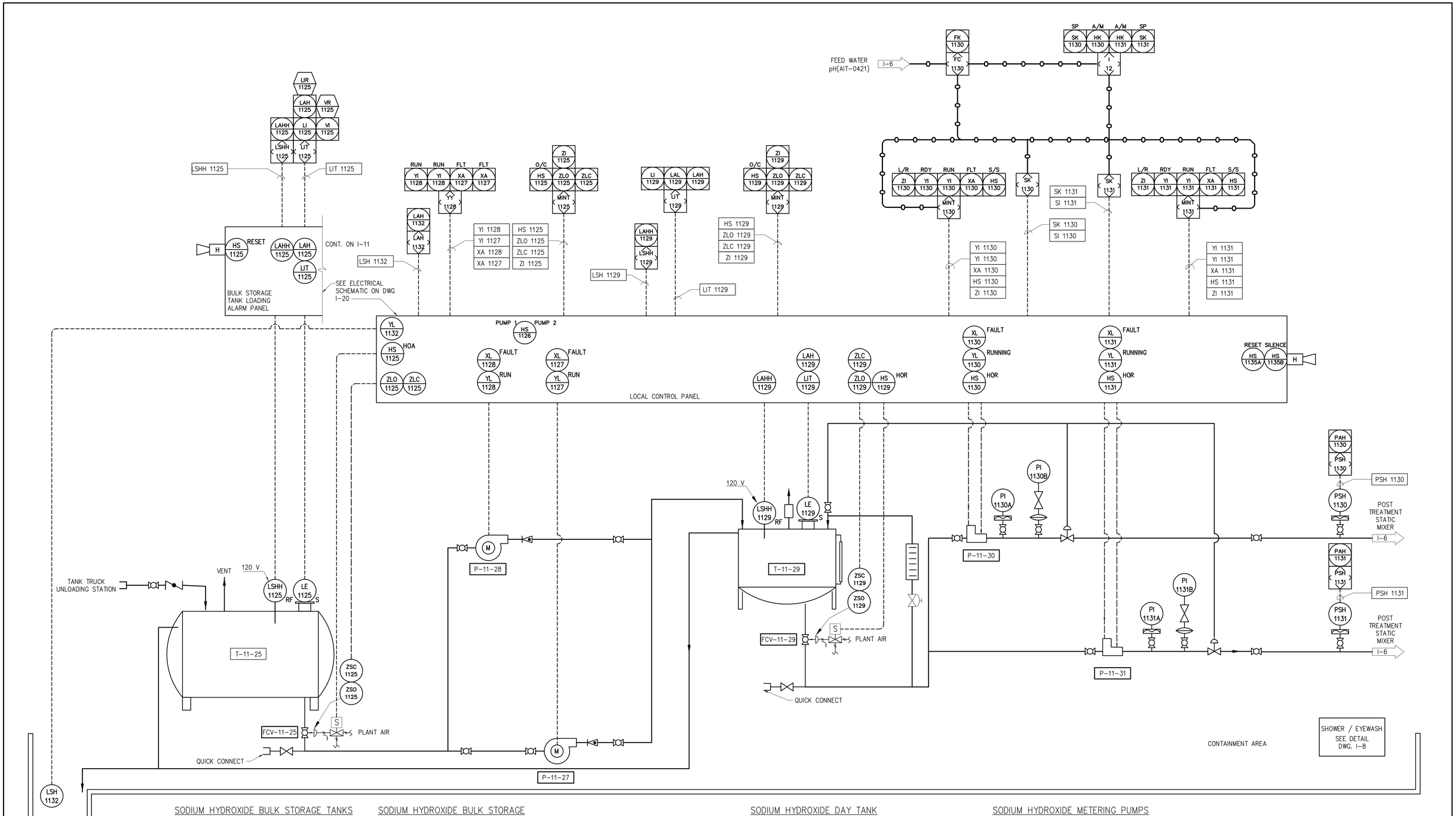

NOTE:
ALL ELECTRICAL COMPONENTS, CONDUITS AND ELECTRICAL JUNCTION BOXES SHALL BE INSTALLED 48" FROM FINISHED GRADE.

NO.	DATE	ISSUED FOR	BY
2	01/08	RECORD DRAWING	P.A.D.
1	10/03	BID SET	L.P.A.

DESIGNED D.M.L.
DRAWN J.M.B.
CHECKED L.P.A.
PROJ. ENGR. P.A.D.

LUIS P. AMARAL P.E.
No. 47573

HAZEN AND SAWYER
Environmental Engineers & Scientists
4000 Hollywood Boulevard, Suite 750N
Hollywood, Florida 33021
Certificate of Authorization Number: 2771

SCALE N.T.S.

CONTRACT: –
CLIENTS PROJECT:
ENGINEERS PROJECT: 40406
CAD REFERENCE: 40406I10

CITY OF HALLANDALE BEACH
UTILITIES DEPARTMENT

6 MGD MEMBRANE SOFTENING W.T.P.

INSTRUMENTATION AND CONTROL

SODIUM HYDROXIDE SYSTEM

DATE: JANUARY 2008
SHEET: 51 OF 162
DRAWING: I-10

RECORD DRAWING

PLOT DATE: 2/11/2008 10:19 AM BY: AMEDINA

XREFs:

File = O:\40406\40406-001\Drawings\INSTR\40406I10 Saved by GDIAZ Save date = 1/30/2008 3:05 PM

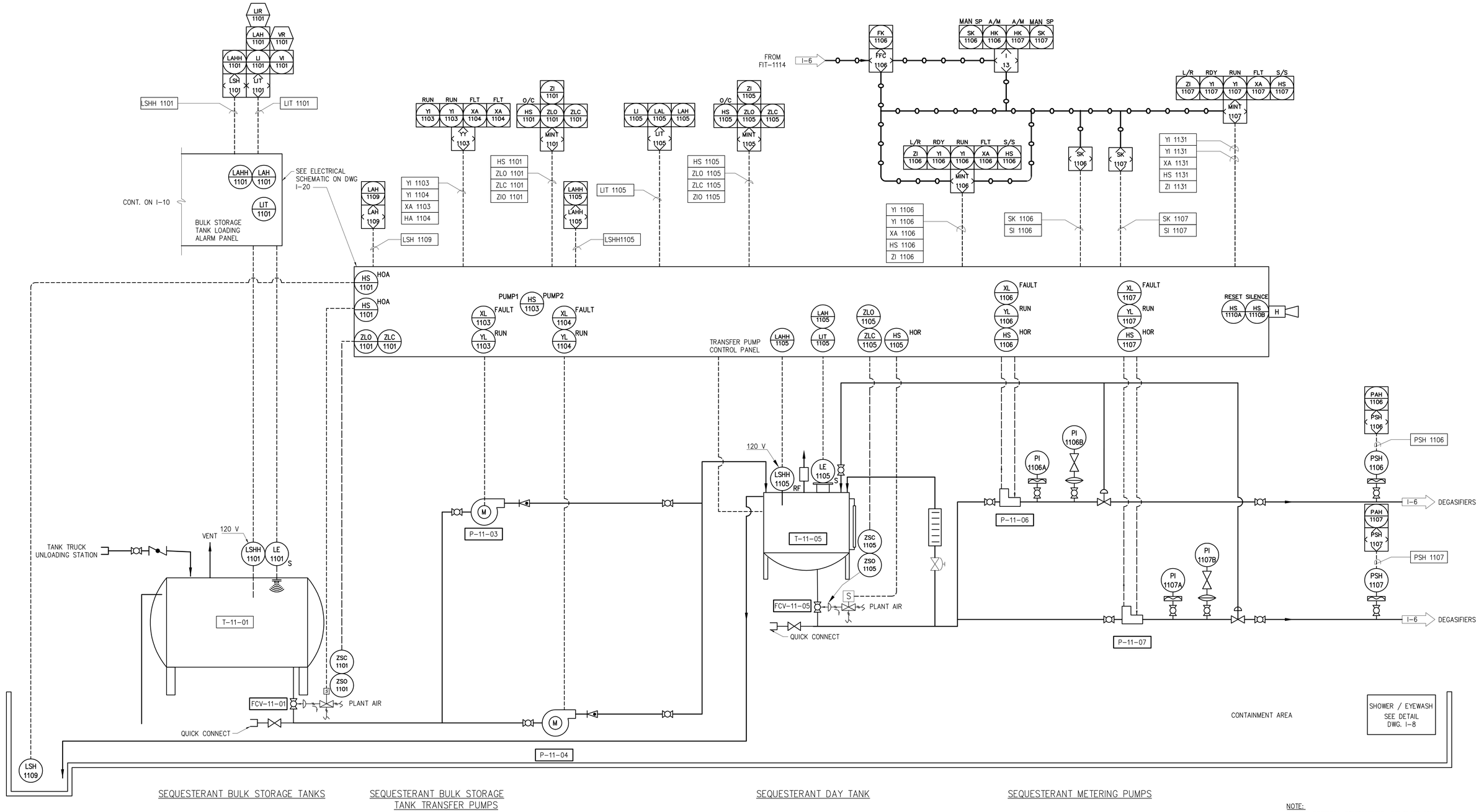

NOTE:
ALL ELECTRICAL COMPONENTS, CONDUITS AND ELECTRICAL JUNCTION BOXES SHALL BE INSTALLED 48" FROM FINISHED GRADE.

NO.	DATE	ISSUED FOR	BY
2	01/08	RECORD DRAWING	P.A.D.
1	10/03	BID SET	L.P.A.

XREFs=

DESIGNED D.M.L.
DRAWN J.M.B.
CHECKED L.P.A.
PROJ. ENGR. P.A.D.

LUIS P. AMARAL P.E.
No. 47573

HAZEN AND SAWYER
Environmental Engineers & Scientists
4000 Hollywood Boulevard, Suite 750N
Hollywood, Florida 33021
Certificate of Authorization Number: 2771

SCALE NONE

CONTRACT: –
CLIENTS PROJECT:
ENGINEERS PROJECT: 40406
CAD REFERENCE: 40406I11

CITY OF HALLANDALE BEACH
UTILITIES DEPARTMENT

6 MGD MEMBRANE SOFTENING W.T.P.

INSTRUMENTATION AND CONTROL
SEQUESTRANT SYSTEM

DATE: JANUARY 2008
SHEET: 52 OF 162
DRAWING: I-11

RECORD DRAWING

PLOT DATE: 2/11/2008 10:19 AM BY: AMEDINA

File = O:\40406\40406-001\Drawings\INSTR\40406I11 Saved by GDIAZ Save date = 1/30/2008 3:06 PM

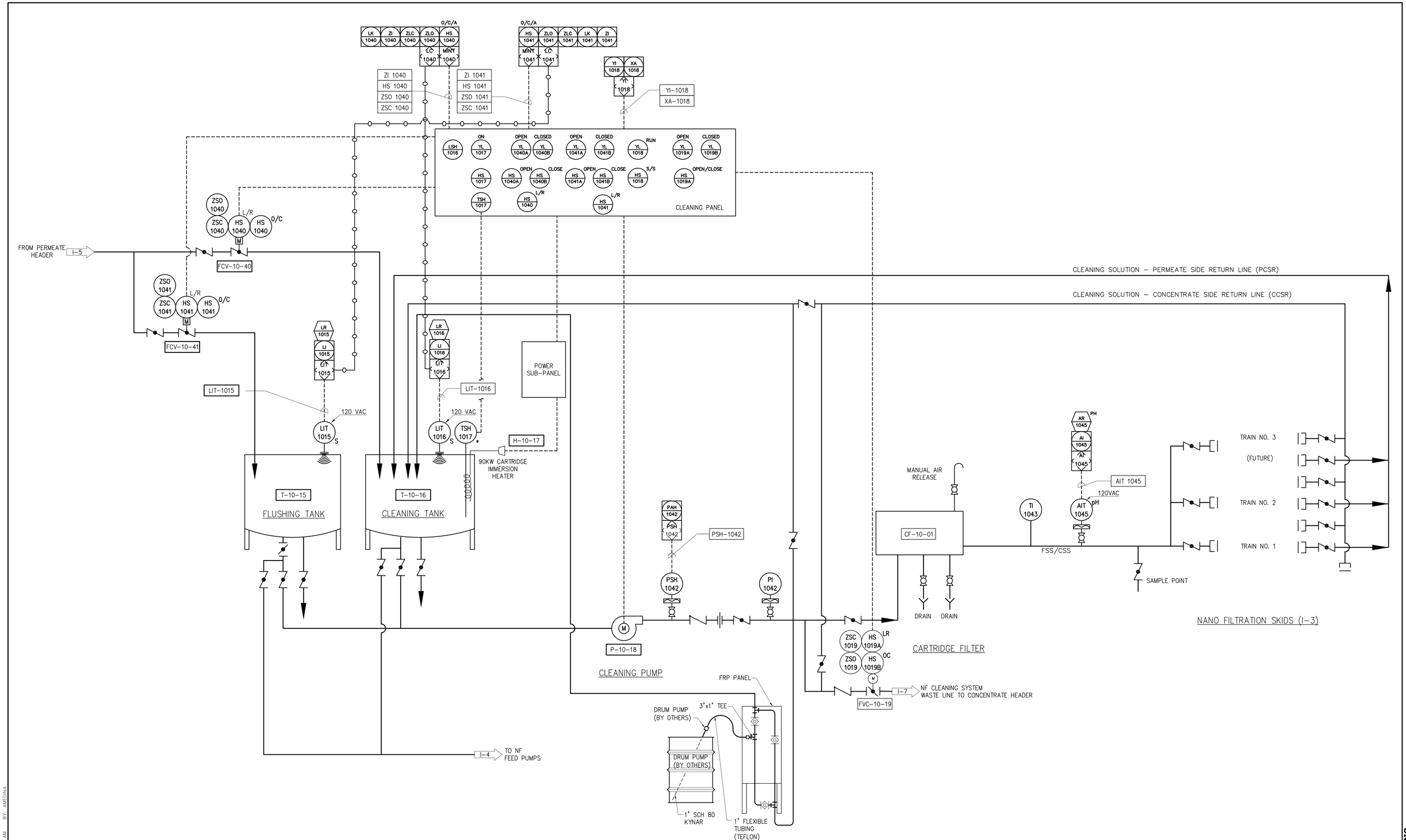

NO.	DATE	ISSUED FOR	BY
2	01/08	RECORD DRAWING	P.A.D.
1	10/03	BID SET	L.P.A.

DESIGNED D.M.L.
DRAWN E.J.J.
CHECKED L.P.A.
PROJ. ENGR. P.A.D.

LUIS P. AMARAL P.E.
No. 47573

HAZEN AND SAWYER
Environmental Engineers & Scientists
4000 Hollywood Boulevard, Suite 750N
Hollywood, Florida 33021
Certificate of Authorization Number: 2771

SCALE: NONE

CONTRACT: –
CLIENTS PROJECT:
ENGINEERS PROJECT: 40406
CAD REFERENCE: 40406I12

CITY OF HALLANDALE BEACH
UTILITIES DEPARTMENT

6 MGD MEMBRANE SOFTENING W.T.P.

INSTRUMENTATION AND CONTROL
NF CLEANING SYSTEM

DATE: JANUARY 2008
SHEET: 53 OF 162
DRAWING: I-12

RECORD DRAWING

PLOT DATE: 2/21/2008 10:19 AM BY: AMEDINA
XREFs=
File = O:\40406\40406-001\Drawings\INSTR\40406I12 Saved by GDIAZ Save date = 1/30/2008 3:07 PM

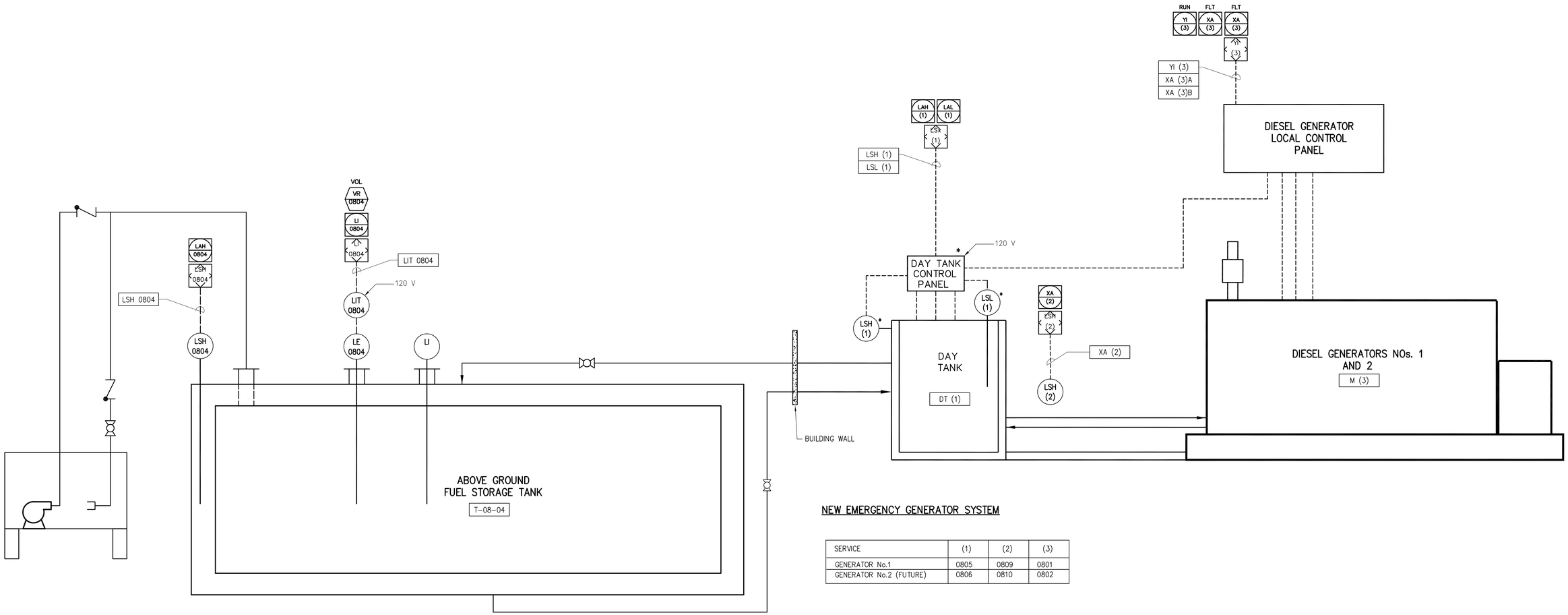

GENERATOR FUEL STORAGE TANK

NEW EMERGENCY GENERATOR SYSTEM

SERVICE	(1)	(2)	(3)
GENERATOR No.1	0805	0809	0801
GENERATOR No.2 (FUTURE)	0806	0810	0802

NOTE:
(*) INSTRUMENT FURNISHED BY EQUIPMENT MANUFACTURER.

NO.	DATE	ISSUED FOR	BY
2	01/08	RECORD DRAWING	P.A.D.
1	10/03	BID SET	L.P.A.

DESIGNED D.M.L.
DRAWN J.M.B.
CHECKED L.P.A.
PROJ. ENGR. P.A.D.

LUIS P. AMARAL P.E.
No. 47573

HAZEN AND SAWYER
Environmental Engineers & Scientists
4000 Hollywood Boulevard, Suite 750N
Hollywood, Florida 33021
Certificate of Authorization Number: 2771

SCALE NONE

CONTRACT: –
CLIENTS PROJECT:
ENGINEERS PROJECT: 40406
CAD REFERENCE: 40406I13

CITY OF HALLANDALE BEACH
UTILITIES DEPARTMENT

6 MGD MEMBRANE SOFTENING W.T.P.

INSTRUMENTATION AND CONTROL
EMERGENCY GENERATOR SYSTEM

DATE: JANUARY 2008
SHEET: 54 OF 162
DRAWING: I-13

RECORD DRAWING

PLOT DATE: 2/11/2008 10:19 AM BY: AMEDINA

XREFs=

File = O:\40406\40406-001\Drawings\INSTR\40406I13 Saved by GDIAZ Save date = 1/30/2008 3:08 PM

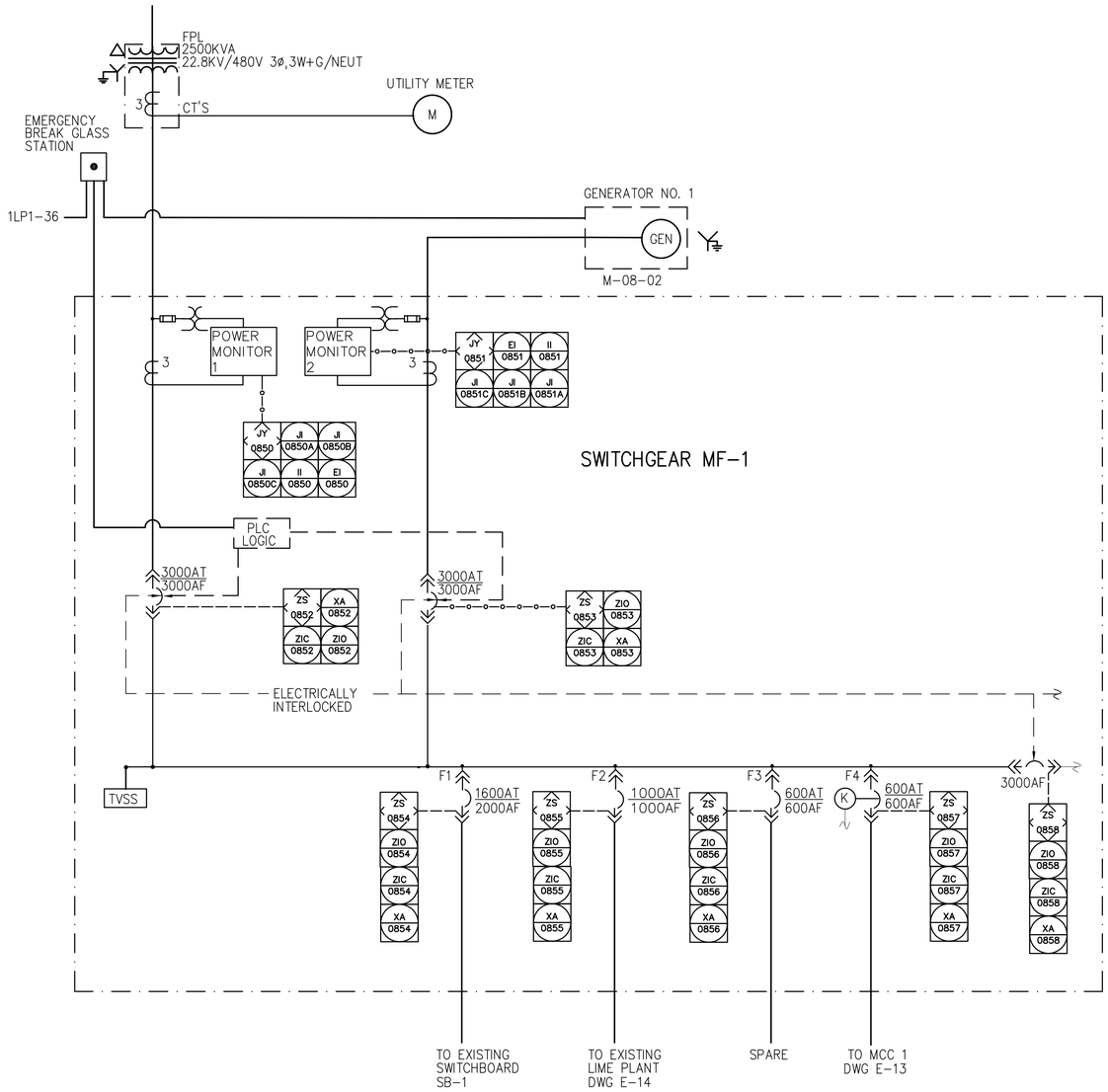

ELECTRICAL MONITORING SYSTEM

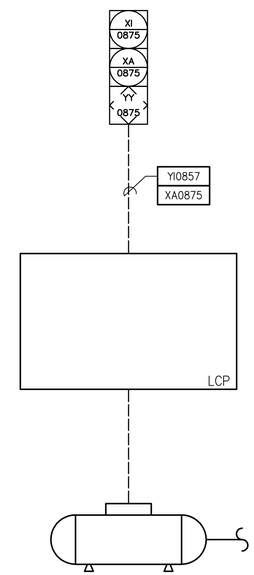

AIR COMPRESSOR

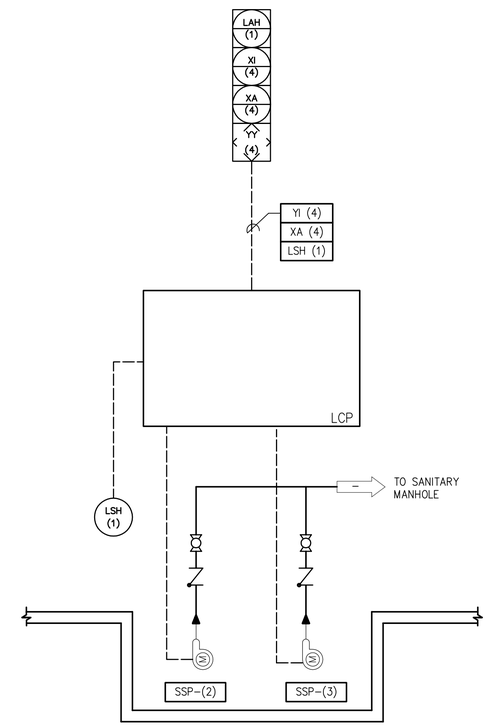

SUBMERSIBLE SUMP PUMP

LOCATION	(1)	(2)	(3)	(4)
RAW WATER VAULT 1	0950	09-51	–	0951
RAW WATER VAULT 2	0952	09-53	–	0953
CHEMICAL VAULT 1	0423	04-24	–	0424
CHEMICAL VAULT 2	0425	04-26	–	0426
NORTH PROCESS TRENCH	1094	10-95	10-96	1095
WEST PROCESS TRENCH	1097	10-98	10-99	1098

NO.	DATE	ISSUED FOR	BY
2	01/08	RECORD DRAWING	P.A.D.
1	10/03	BID SET	L.P.A.

DESIGNED D.M.L.
DRAWN E.J.J.
CHECKED L.P.A.
PROJ. ENGR. P.A.D.

LUIS P. AMARAL P.E.
No. 47573

HAZEN AND SAWYER
Environmental Engineers & Scientists
4000 Hollywood Boulevard, Suite 750N
Hollywood, Florida 33021
Certificate of Authorization Number: 2771

SCALE NONE

CONTRACT: –
CLIENTS PROJECT:
ENGINEERS PROJECT: 40406
CAD REFERENCE: 40406I14

CITY OF HALLANDALE BEACH
City of Choice
CITY OF HALLANDALE BEACH
UTILITIES DEPARTMENT

6 MGD MEMBRANE SOFTENING W.T.P.

INSTRUMENTATION AND CONTROL
MISCELLANEOUS SYSTEMS

DATE: JANUARY 2008
SHEET: 55 OF 162
DRAWING: I-14

RECORD DRAWING

PLOT DATE: 2/21/2008 10:20 AM BY: AMEDINA
XREFs=
File = O:\40406\40406-001\Drawings\INSTR\40406I14 Saved by GDIAZ Save date = 1/30/2008 3:10 PM

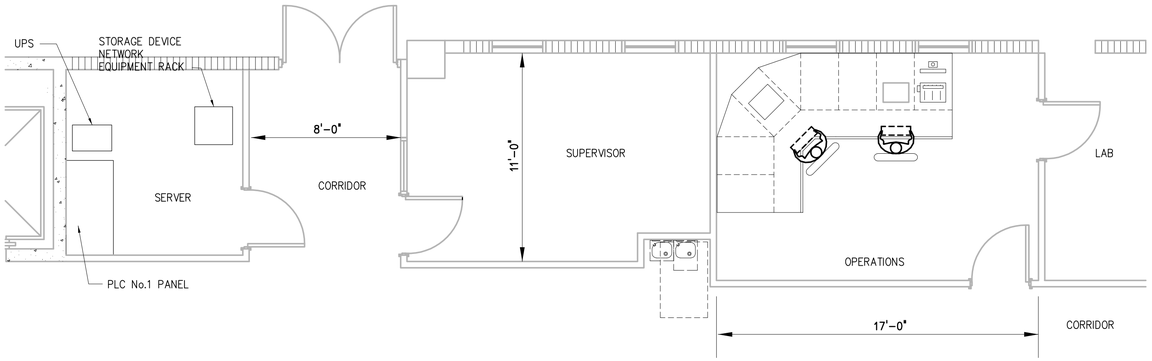

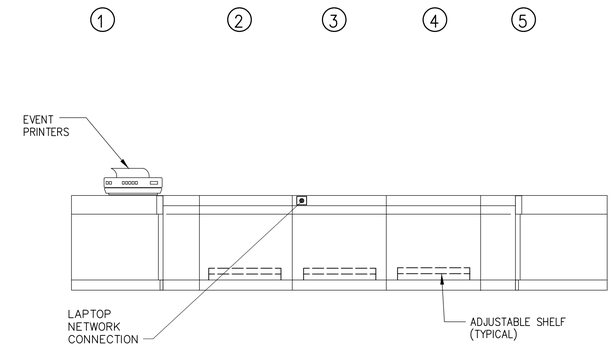

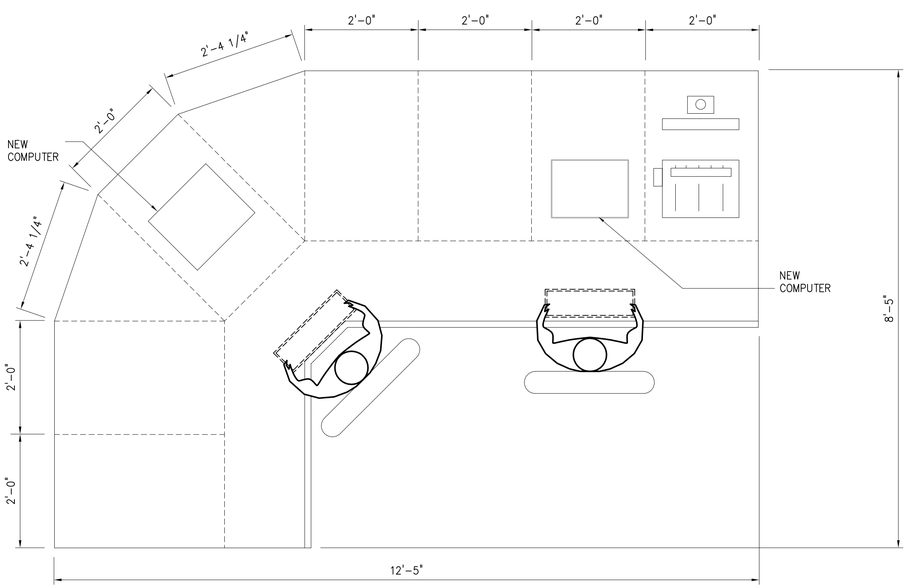

NO.	DATE	ISSUED FOR	BY
2	01/08	RECORD DRAWING	P.A.D.
1	10/03	BID SET	L.P.A.

DESIGNED D.M.L.
DRAWN E.J.J.
CHECKED L.P.A.
PROJ. ENGR. P.A.D.

LUIS P. AMARAL P.E.
No. 47573

HAZEN AND SAWYER
Environmental Engineers & Scientists
4000 Hollywood Boulevard, Suite 750N
Hollywood, Florida 33021
Certificate of Authorization Number: 2771

SCALE
NONE

CONTRACT: –
CLIENTS PROJECT:
ENGINEERS PROJECT: 40406
CAD REFERENCE: 40406I15

CITY OF HALLANDALE BEACH
City of Choice
CITY OF HALLANDALE BEACH
UTILITIES DEPARTMENT

6 MGD MEMBRANE SOFTENING W.T.P.

INSTRUMENTATION AND CONTROL

OPERATIONS CONTROL CENTER

DATE: JANUARY 2008
SHEET: 56 OF 162
DRAWING: I-15

RECORD DRAWING

PLOT DATE: 2/11/2008 10:20 AM BY: AMEDINA

XREFs=

File = O:\40406\40406-001\Drawings\INSTR\40406I15 Saved by GDIAZ Save date = 1/30/2008 3:11 PM

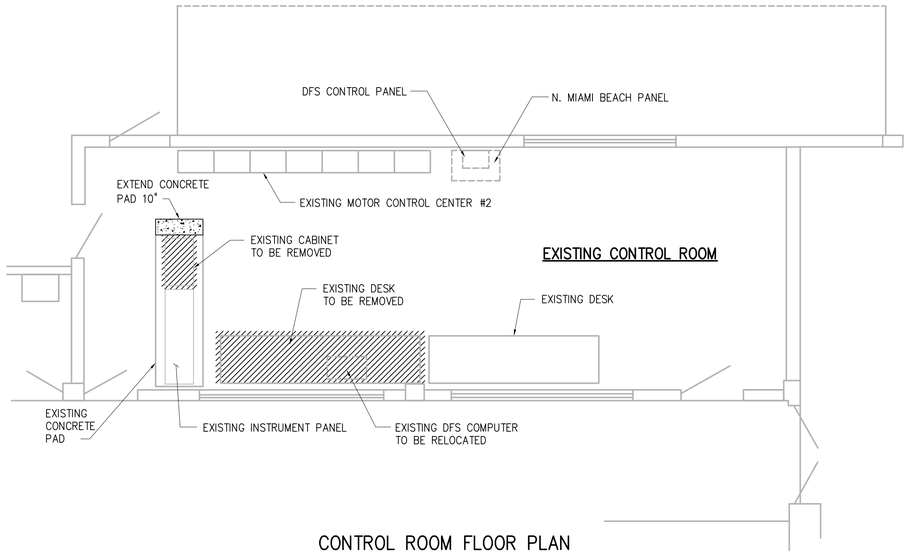

CONTROL ROOM FLOOR PLAN

1/4"=1'-0"

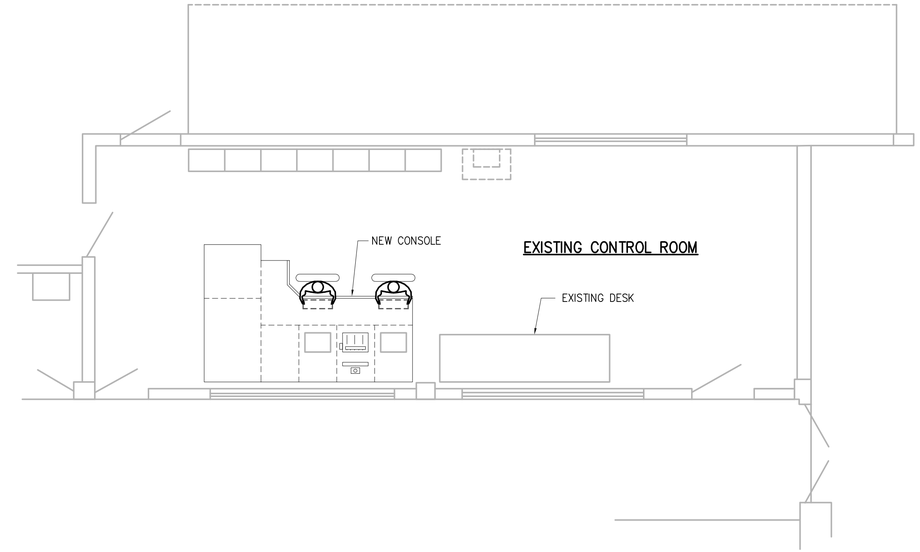

PROPOSED CONTROL ROOM FLOOR PLAN

1/4"=1'-0"

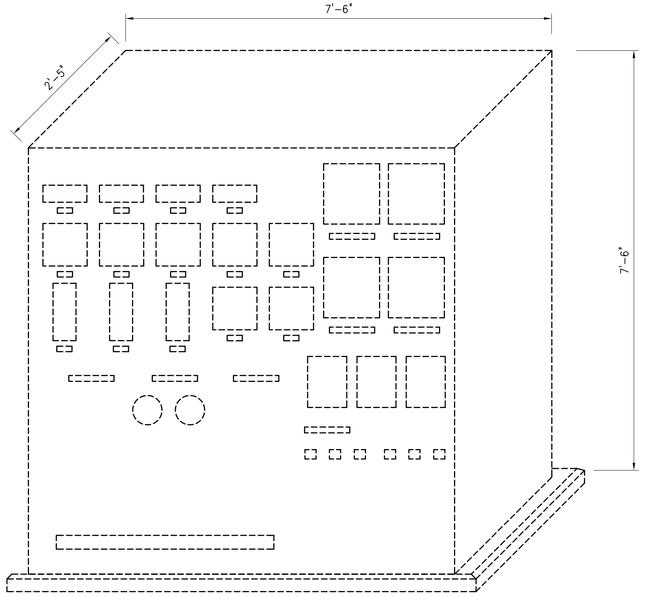

INSTRUMENT PANEL TO REMAIN

N.T.S.

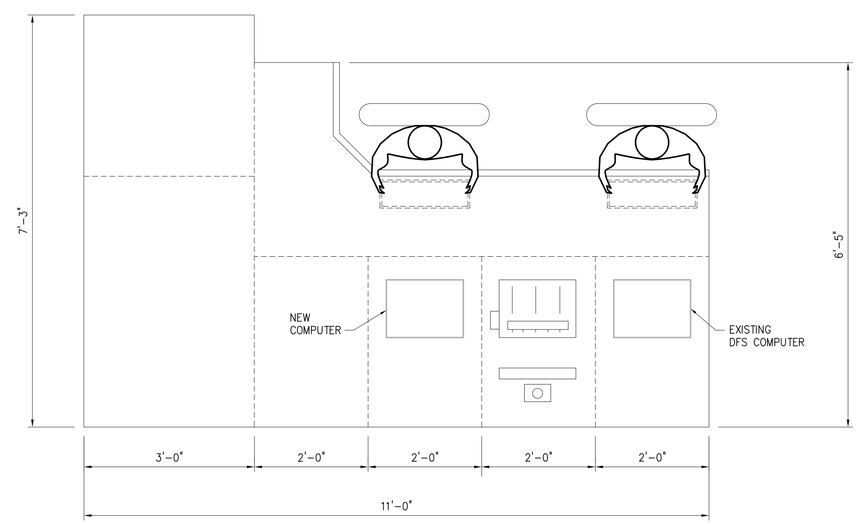

NEW CONSOLE

NTS

TO BE DEMOLISHED

NO.	DATE	ISSUED FOR	BY
1	10/03	BID SET	L.P.A.

XREFs=

DESIGNED D.M.L.
DRAWN E.J.J.
CHECKED L.P.A.
PROJ. ENGR. P.A.D.

LUIS P. AMARAL P.E.
No. 47573

HAZEN AND SAWYER
Environmental Engineers & Scientists
4000 Hollywood Boulevard, Suite 750N
Hollywood, Florida 33021
Certificate of Authorization Number: 2771

SCALE 1/4" = 1'-0"

CONTRACT: –
CLIENTS PROJECT:
ENGINEERS PROJECT: 40406
CAD REFERENCE: 40406I16

CITY OF HALLANDALE BEACH
UTILITIES DEPARTMENT

6 MGD MEMBRANE SOFTENING W.T.P.

INSTRUMENTATION AND CONTROL
EXISTING LIME PLANT
CONTROL ROOM MODIFICATION

DATE: JANUARY 2008
SHEET: 57 OF 162
DRAWING: I-16

RECORD DRAWING

PLOT DATE: 2/11/2008 10:20 AM BY: AMEDINA

File = O:\40406\40406-001\Drawings\INSTR\40406I16 Saved by GDIAZ Save date = 1/30/2008 3:12 PM

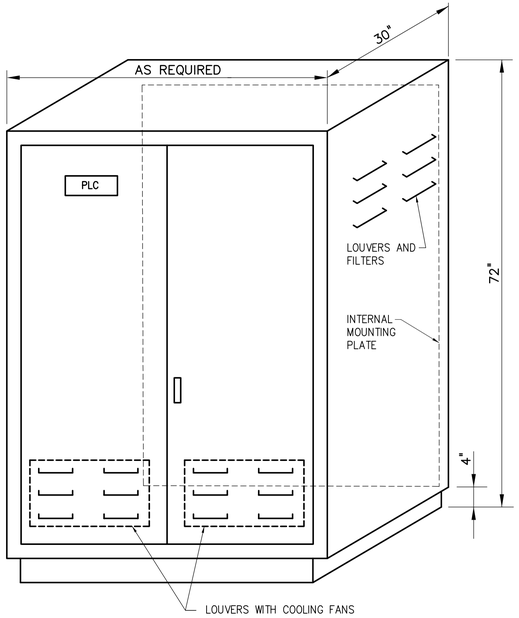

PLC ENCLOSURE
N.T.S.

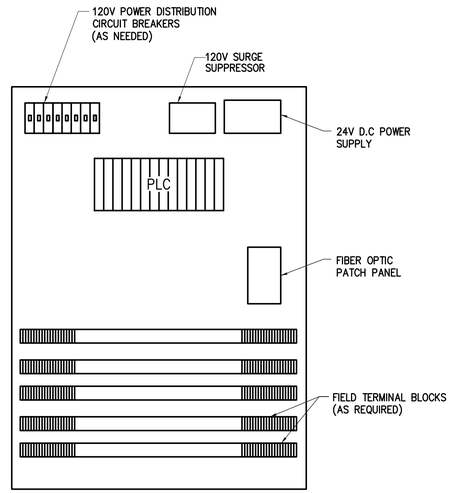

PLC INTERNAL MOUNTING PLATE
N.T.S.

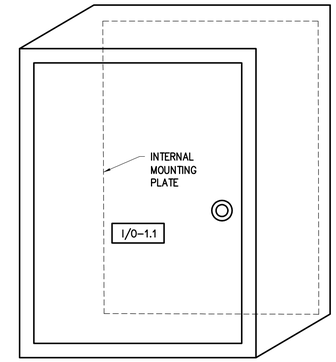

REMOTE I/O ENCLOSURE
N.T.S.

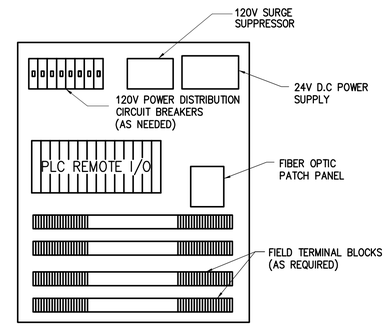

I/O INTERNAL MOUNTING PLATE
N.T.S.

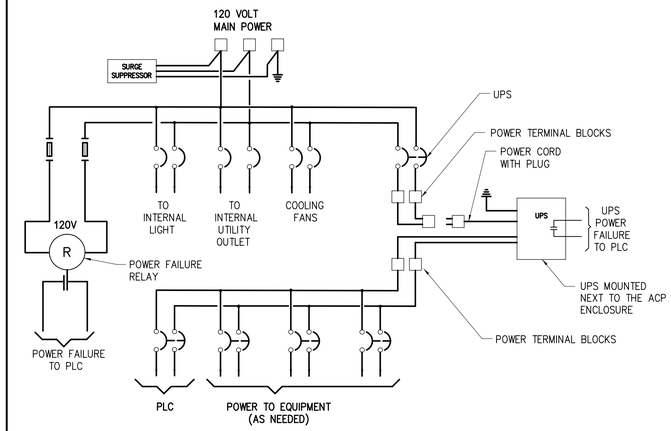

PLC ENCLOSURE POWER DISTRIBUTION
N.T.S.

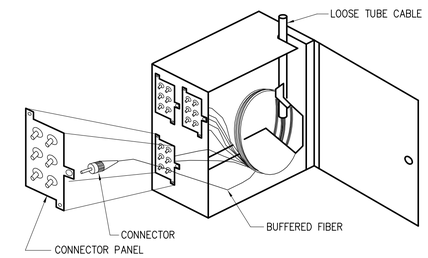

FIBER-OPTIC PATCH PANEL
N.T.S.

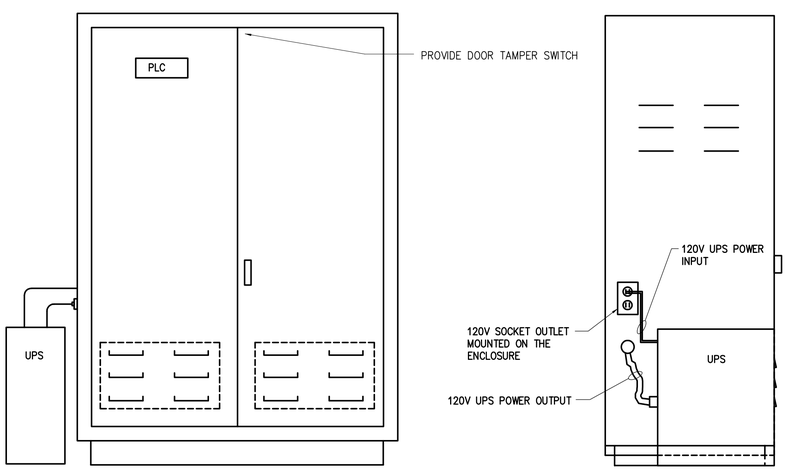

NOTE:
(1) THE UPS INSTALLATION SHALL BE IN CONFORMITY TO THE PANEL LOCATION

PLC ENCLOSURE / UPS LOCATION
N.T.S.

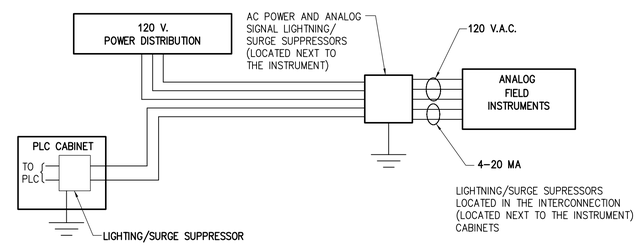

4-WIRE FIELD TRANSMITTERS

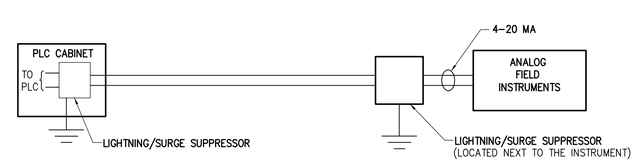

2-WIRE FIELD TRANSMITTERS

ANALOG CIRCUITS – LIGHTNING PROTECTION
N.T.S.

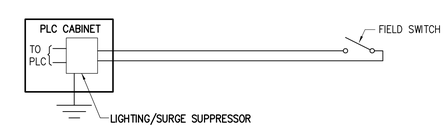

DISCRETE PLC/INPUT CIRCUIT
N.T.S.

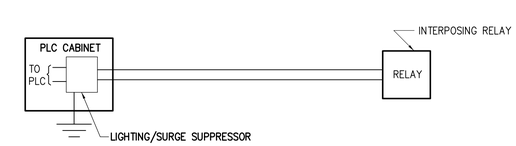

DISCRETE PLC/OUTPUT CIRCUIT
N.T.S.

NO.	DATE	ISSUED FOR	BY
2	01/08	RECORD DRAWING	P.A.D.
1	10/03	BID SET	L.P.A.

DESIGNED D.M.L.
DRAWN E.J.J.
CHECKED L.P.A.
PROJ. ENGR. P.A.D.

LUIS P. AMARAL P.E.
No. 47573

HAZEN AND SAWYER
Environmental Engineers & Scientists
4000 Hollywood Boulevard, Suite 750N
Hollywood, Florida 33021
Certificate of Authorization Number: 2771

SCALE: NONE

CONTRACT: –
CLIENTS PROJECT:
ENGINEERS PROJECT: 40406
CAD REFERENCE: 40406I17

CITY OF HALLANDALE BEACH
UTILITIES DEPARTMENT

6 MGD MEMBRANE SOFTENING W.T.P.

INSTRUMENTATION AND CONTROL
ENCLOSURES DETAIL

DATE: JANUARY 2008
SHEET: 58 OF 162
DRAWING: I-17

RECORD DRAWING

PLOT DATE: 2/11/2008 10:20 AM BY: AMEDINA
XREFs=

File = O:\40406\40406-001\Drawings\INSTR\40406I17 Saved by GDIAZ Save date = 1/30/2008 3:13 PM

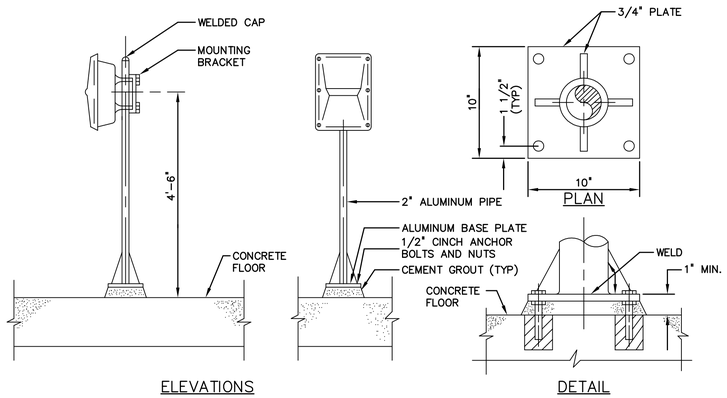

PIPE STAND TRANSMITTER MOUNT

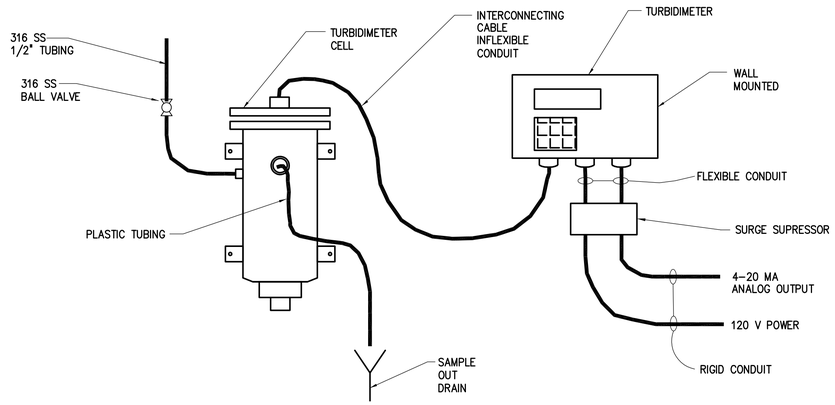

TURBIDIMETER INSTALLATION DETAIL

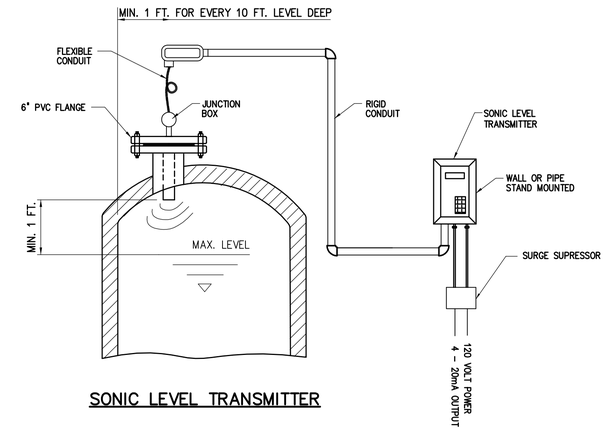

SONIC LEVEL TRANSMITTER

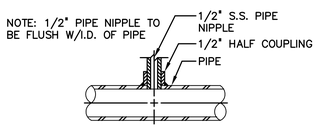

PRESSURE TAP DETAIL

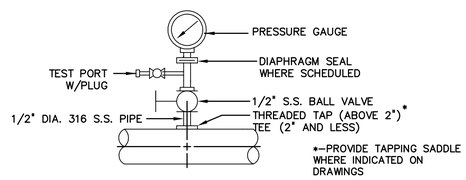

PRESSURE GAUGE, INSTRUMENT OR SWITCH

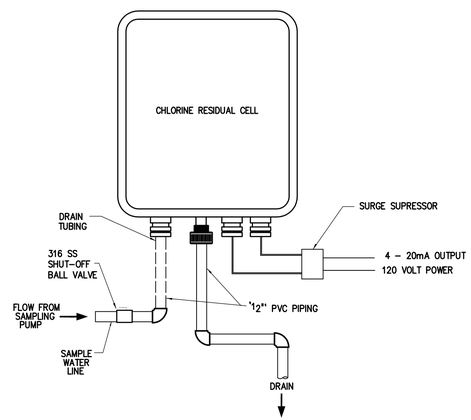

CHLORINE RESIDUAL

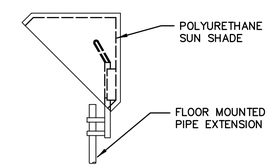

NOTE:
SUN SHEILD MUST BE FURNISHED AND INSTALLED TO ALL THE MOUNTED OUTDOOR FIELD INSTRUMENTS. MOUNTED OUTDOOR

FIELD INSTRUMENT SUN SHEILD

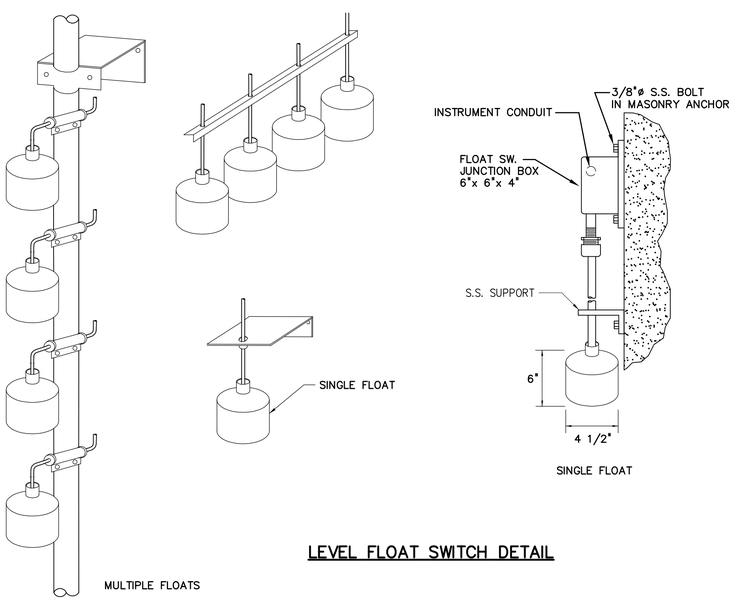

LEVEL FLOAT SWITCH DETAIL

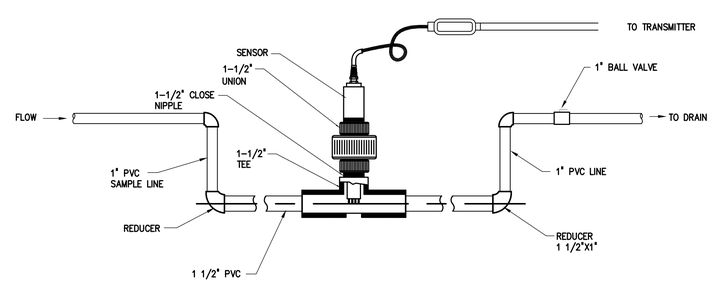

PH SENSOR INSTALLATION DETAIL

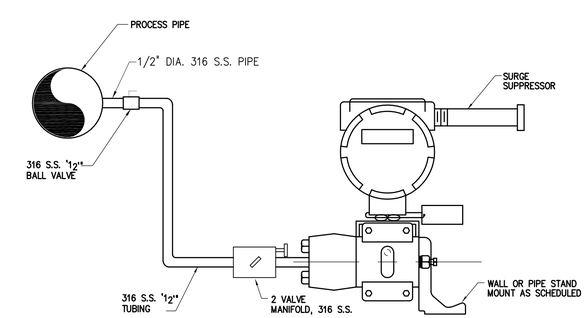

PRESSURE TRANSMITTER

NO.	DATE	ISSUED FOR	BY
2	01/08	RECORD DRAWING	P.A.D.
1	10/03	BID SET	L.P.A.

DESIGNED L.P.A.
DRAWN E.J.J.
CHECKED L.P.A.
PROJ. ENGR. P.A.D.

LUIS P. AMARAL P.E.
No. 47573

HAZEN AND SAWYER
Environmental Engineers & Scientists
4000 Hollywood Boulevard, Suite 750N
Hollywood, Florida 33021
Certificate of Authorization Number: 2771

SCALE: NONE

CONTRACT: –
CLIENTS PROJECT:
ENGINEERS PROJECT: 40406
CAD REFERENCE: 40406I18

CITY OF HALLANDALE BEACH
UTILITIES DEPARTMENT

6 MGD MEMBRANE SOFTENING W.T.P.

INSTRUMENTATION AND CONTROL
INSTALLATION DETAILS
SHEET 1

DATE: JANUARY 2008
SHEET: 59 OF 162
DRAWING: I-18

RECORD DRAWING

PLOT DATE: 2/11/2008 10:20 AM BY: AMEDINA
XREFs=

File = O:\40406\40406-001\Drawings\INSTR\40406I18 Saved by GDIAZ Save date = 1/30/2008 3:14 PM

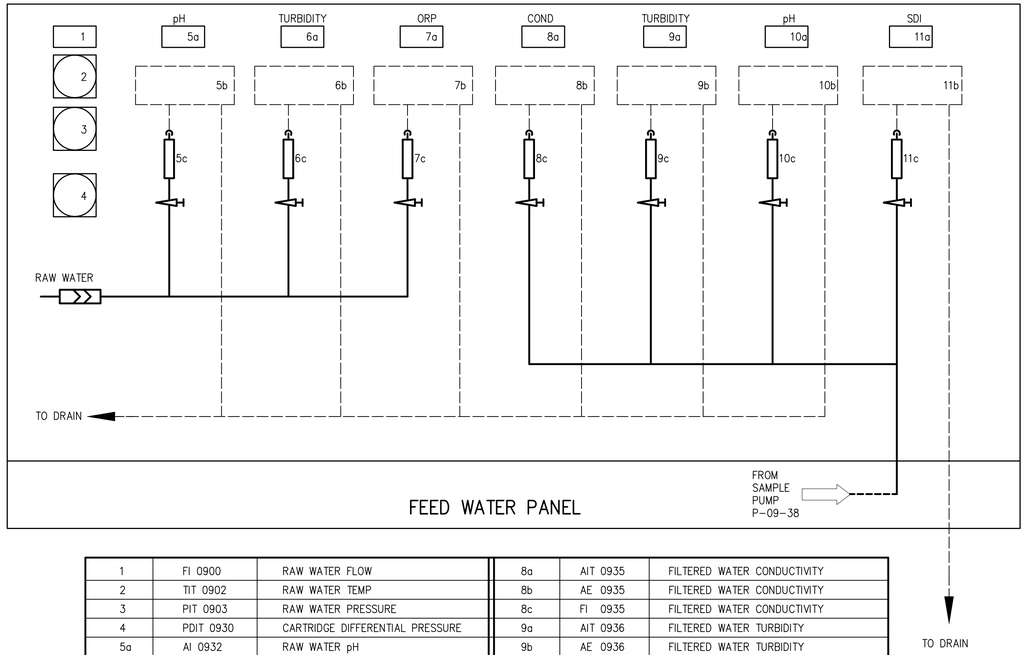

FEED WATER PANEL

1	FI 0900	RAW WATER FLOW	8a	AIT 0935	FILTERED WATER CONDUCTIVITY
2	TIT 0902	RAW WATER TEMP	8b	AE 0935	FILTERED WATER CONDUCTIVITY
3	PIT 0903	RAW WATER PRESSURE	8c	FI 0935	FILTERED WATER CONDUCTIVITY
4	PDIT 0930	CARTRIDGE DIFFERENTIAL PRESSURE	9a	AIT 0936	FILTERED WATER TURBIDITY
5a	AI 0932	RAW WATER pH	9b	AE 0936	FILTERED WATER TURBIDITY
5b	AE 0932	RAW WATER pH	9c	FI 0936	FILTERED WATER TURBIDITY
5c	FI 0932	RAW WATER pH	10a	AIT 0937	FILTERED WATER pH
6a	AI 0933	RAW WATER TURBIDITY	10b	AE 0937	FILTERED WATER pH
6b	AE 0933	RAW WATER TURBIDITY	10c	FI 0937	FILTERED WATER pH
6C	FI 0933	RAW WATER TURBIDITY	11a	AIT 0938	FILTERED WATER SDI
7a	AI 0934	RAW WATER ORP	11b	AE 0938	FILTERED WATER SDI
7b	AE 0934	RAW WATER ORP	11c	FI 0938	FILTERED WATER SDI
7c	FI 0934	RAW WATER ORP			

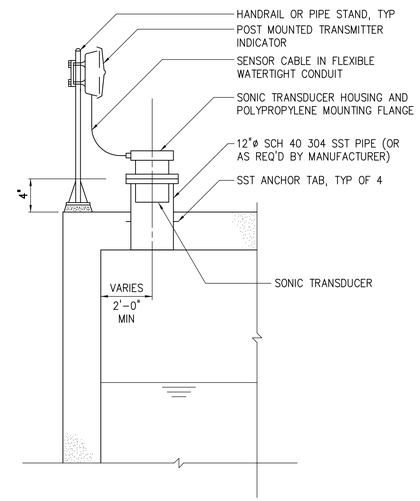

SONIC LEVEL SENSOR DETAIL

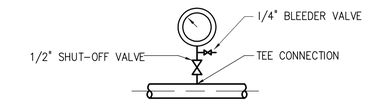

PRESSURE GAUGE OR SWITCH INSTALLATION WITH TEE CONNECTION (SHOWN W/O DIAPHRAGM SEAL)

NOTES:

1. TEMPERATURE INSTRUMENT NOT SHOWN
2. INSERTION LENGTH "L" SHALL BE AS FOLLOWS: FOR PIPES UP TO 12 INCHES "L" SHALL EQUAL 1/3 THE DIAMETER OF THE PIPE. FOR LARGER PIPES AND VESSELS, "L" SHALL BE SIZED SO THAT IT EXTENDS 4 INCHES INTO THE PROCESS.

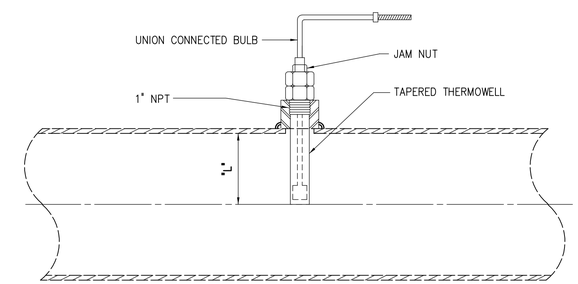

TYPICAL TEMPERATURE ELEMENT

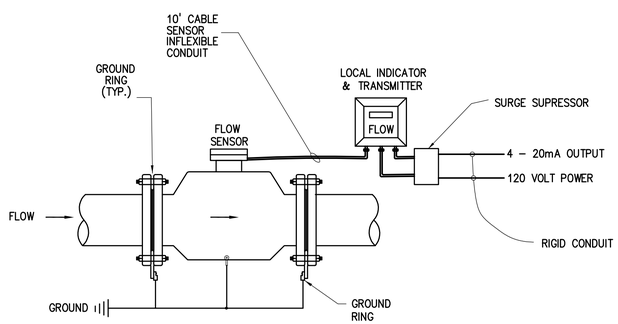

MAGNETIC FLOWMETER INSTALLATION

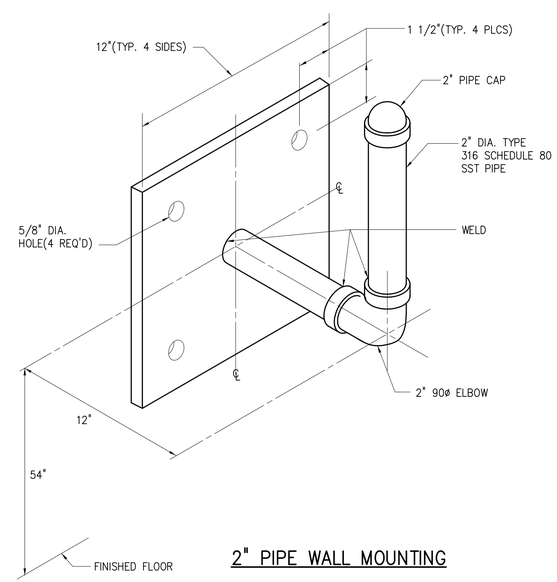

2" PIPE WALL MOUNTING

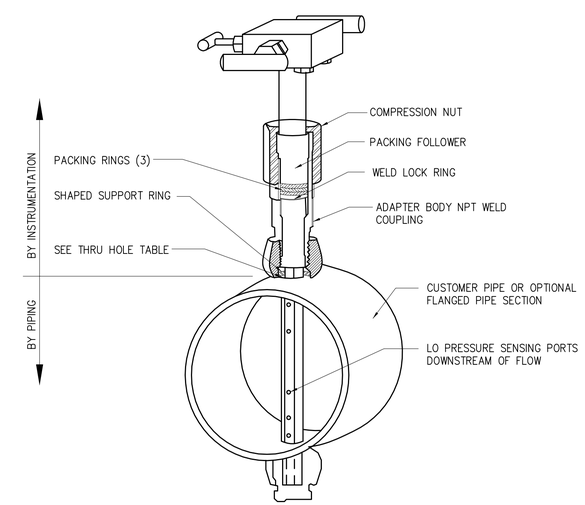

ANNUBAR INSTALLATION

NO.	DATE	ISSUED FOR	BY
2	01/08	RECORD DRAWING	P.A.D.
1	10/03	BID SET	L.P.A.

DESIGNED D.M.L.
DRAWN J.M.B.
CHECKED L.P.A.
PROJ. ENGR. P.A.D.

LUIS P. AMARAL P.E.
No. 47573

HAZEN AND SAWYER
Environmental Engineers & Scientists
4000 Hollywood Boulevard, Suite 750N
Hollywood, Florida 33021
Certificate of Authorization Number: 2771

SCALE: NONE

CONTRACT: –
CLIENTS PROJECT:
ENGINEERS PROJECT: 40406
CAD REFERENCE: 40406I19

CITY OF HALLANDALE BEACH
UTILITIES DEPARTMENT

6 MGD MEMBRANE SOFTENING W.T.P.

INSTRUMENTATION AND CONTROL INSTALLATION DETAILS SHEET 2

DATE: JANUARY 2008
SHEET: 60 OF 162
DRAWING: I-19

RECORD DRAWING

PLOT DATE: 2/11/2008 10:20 AM BY: AMEDINA

XREFs:

File = O:\40406\40406-001\Drawings\INSTR\40406I19 Saved by GDIAZ Save date = 1/30/2008 3:15 PM

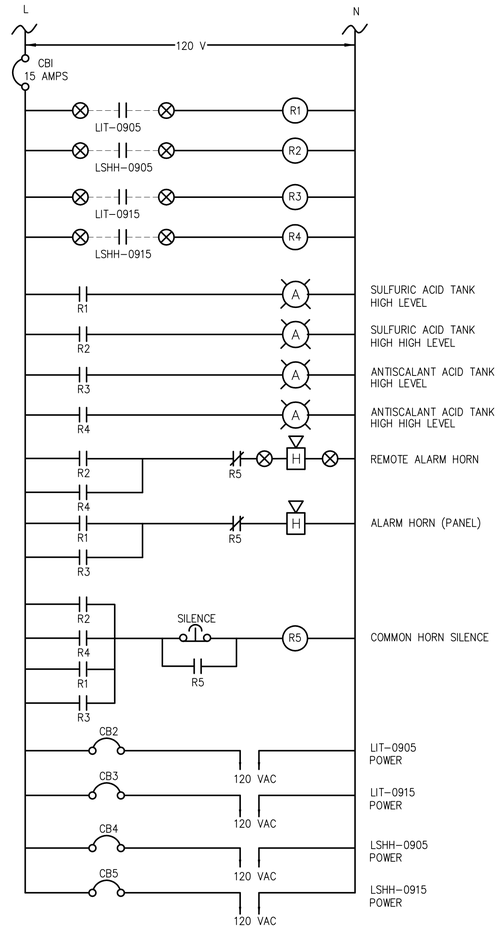

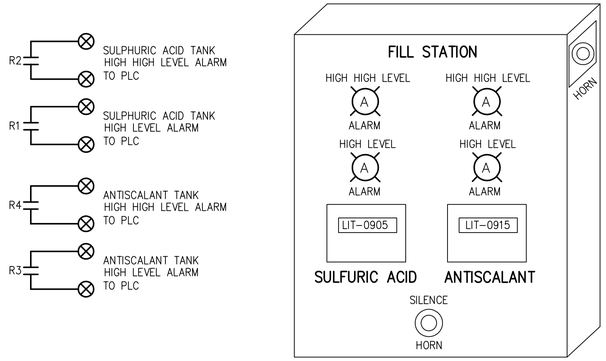

FILL STATION ALARM PANEL

NOTE:
TWO (2) FILL ALARM PANELS REQUIRED. THE SULFURIC ACID / ANTISCALANT FILL ALARM PANEL SHOWN IS TYPICAL FOR THE SEQUESTRANT / SODIUM HYDROXIDE FILL ALARM PANEL.

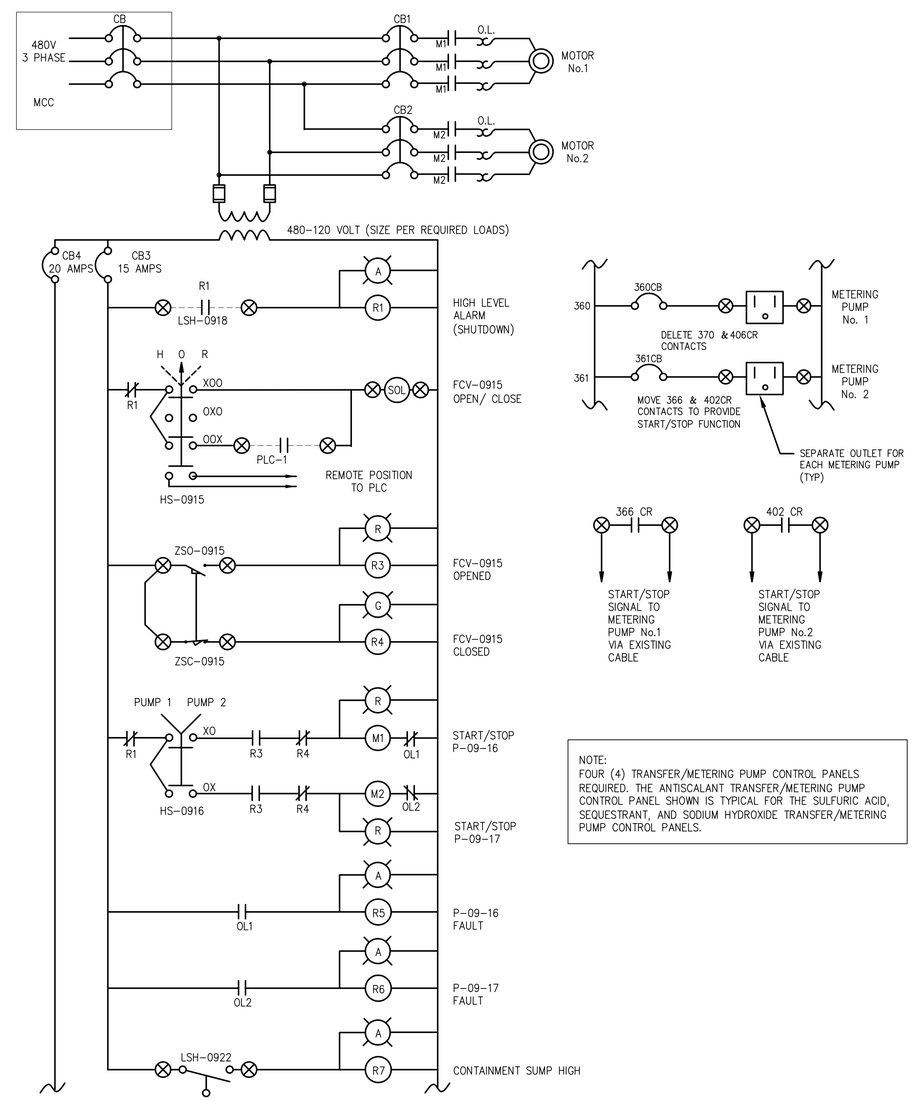

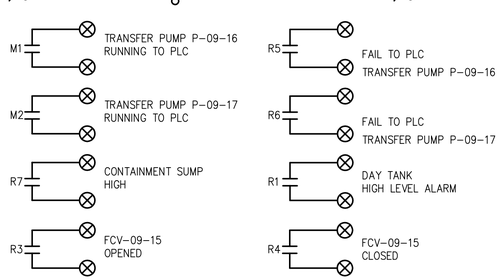

NOTE:
FOUR (4) TRANSFER/METERING PUMP CONTROL PANELS REQUIRED. THE ANTISCALANT TRANSFER/METERING PUMP CONTROL PANEL SHOWN IS TYPICAL FOR THE SULFURIC ACID, SEQUESTRANT, AND SODIUM HYDROXIDE TRANSFER/METERING PUMP CONTROL PANELS.

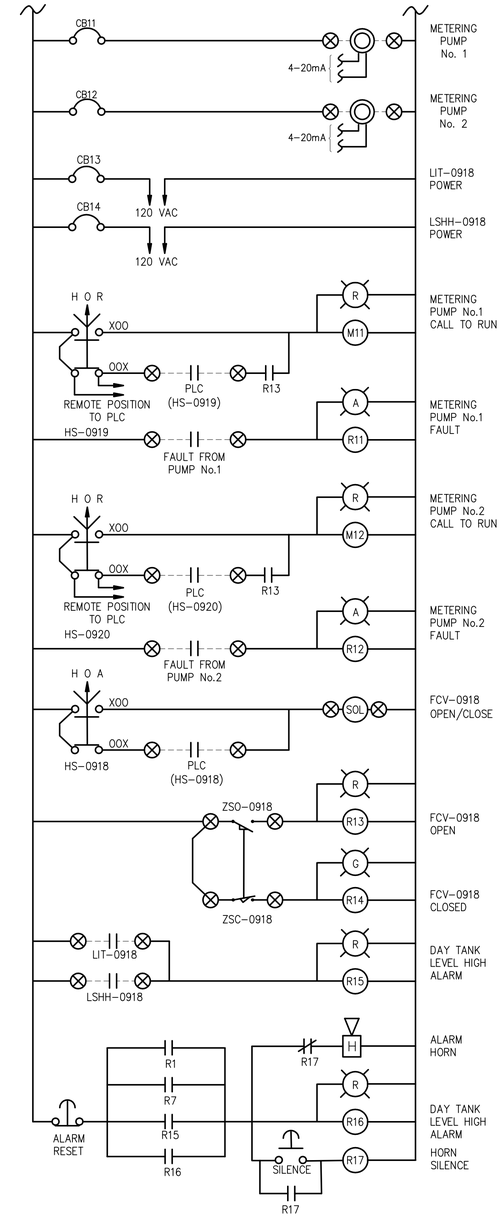

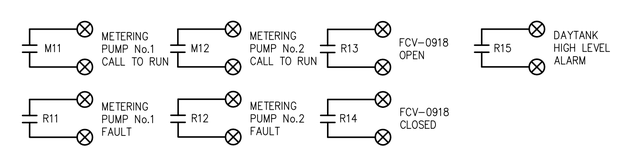

ANTISCALANT TRANSFER AND METERING PUMP CONTROL PANEL

NO.	DATE	ISSUED FOR	BY
2	01/08	RECORD DRAWING	P.A.D.
1	10/03	BID SET	L.P.A.

DESIGNED D.M.L.
DRAWN J.M.B.
CHECKED L.P.A.
PROJ. ENGR. P.A.D.

LUIS P. AMARAL P.E.
No. 47573

HAZEN AND SAWYER
Environmental Engineers & Scientists
4000 Hollywood Boulevard, Suite 750N
Hollywood, Florida 33021
Certificate of Authorization Number: 2771

SCALE: NONE

CONTRACT: –
CLIENTS PROJECT:
ENGINEERS PROJECT: 40406
CAD REFERENCE: 40406I20

CITY OF HALLANDALE BEACH
UTILITIES DEPARTMENT

6 MGD MEMBRANE SOFTENING W.T.P.

INSTRUMENTATION AND CONTROL DETAIL SCHEMATICS SHEET 1

DATE: JANUARY 2008
SHEET: 61 OF 162
DRAWING: I-20

RECORD DRAWING

PLOT DATE: 2/1/2008 10:20 AM BY: AMEDINA
XREFs:
File = O:\40406\40406-001\Drawings\INSTR\40406I20 Saved by GDIAZ Save date = 1/30/2008 3:16 PM

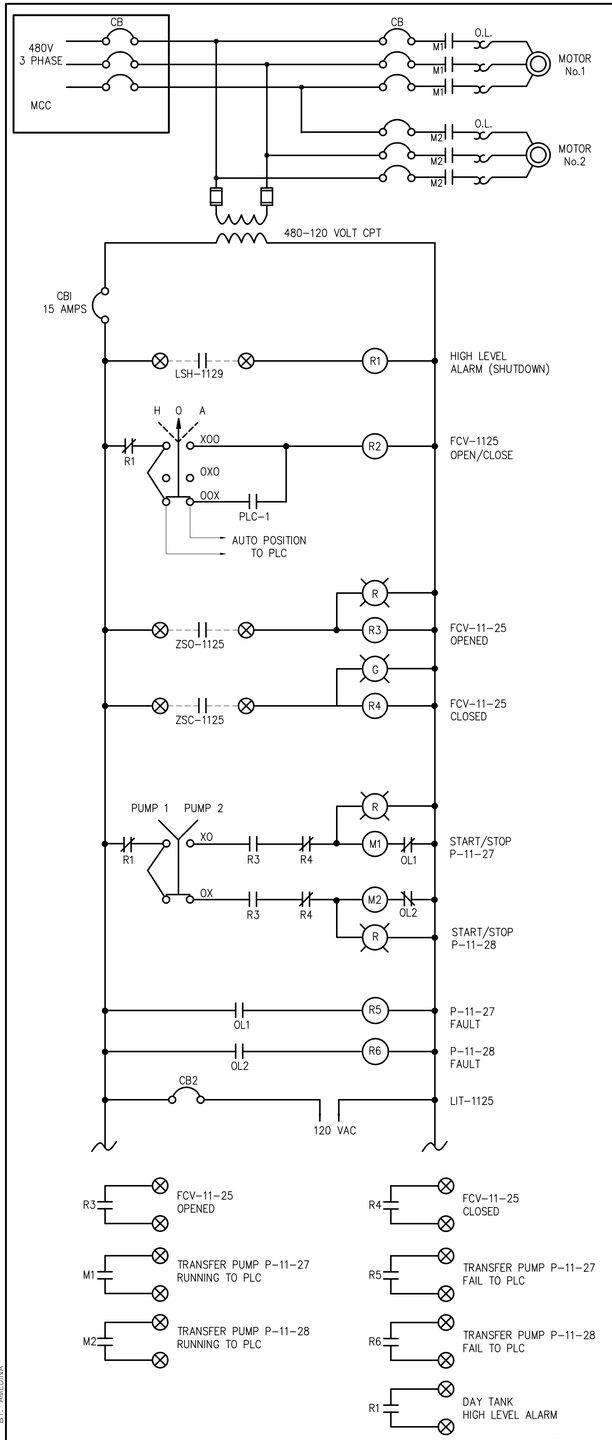

SODIUM HYDROXIDE TRANSFER PUMP CONTROL PANEL

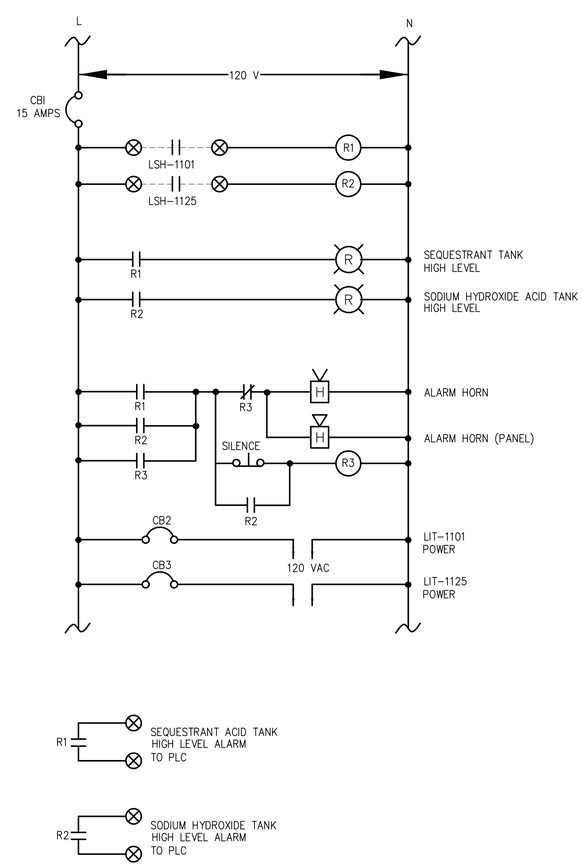

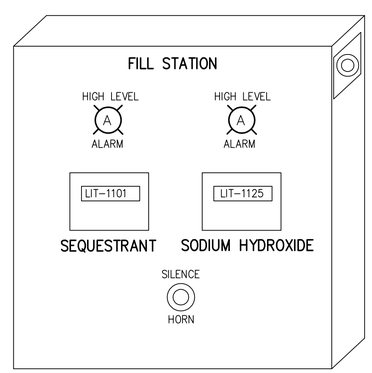

FILL STATION ALARM PANEL

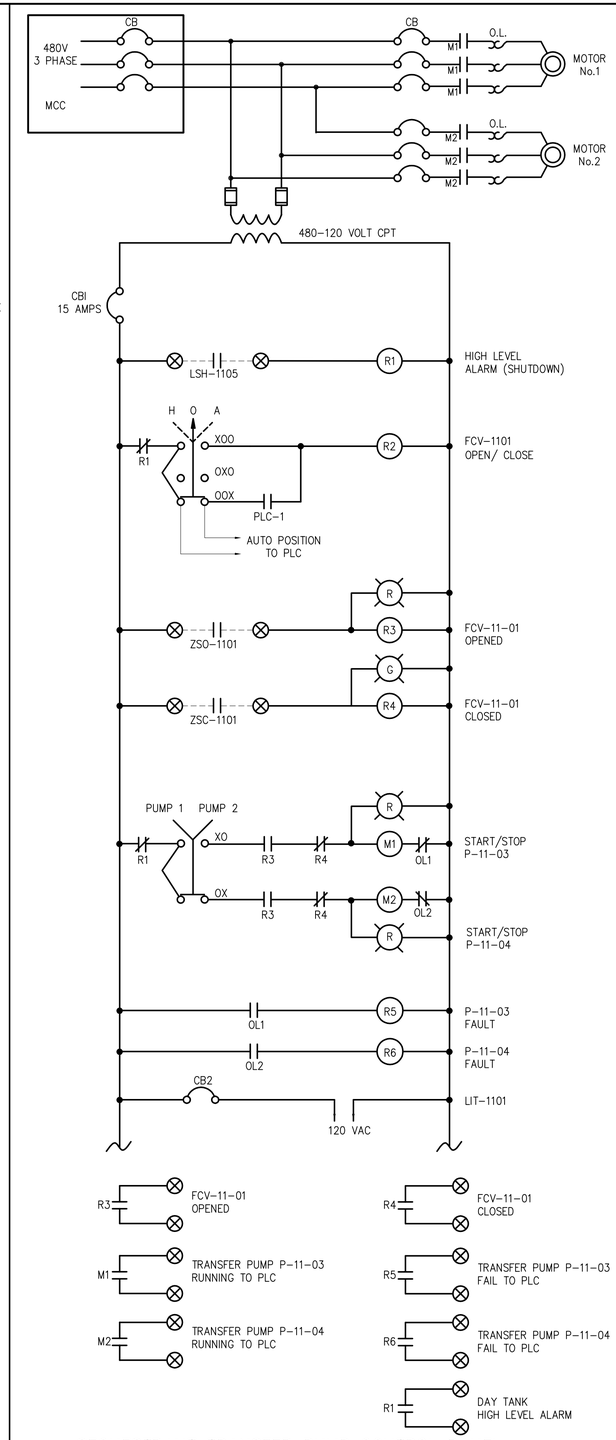

SEQUESTRANT TRANSFER PUMP CONTROL PANEL

NO.	DATE	ISSUED FOR	BY
2	01/08	RECORD DRAWING	P.A.D.
1	10/03	BID SET	L.P.A.

DESIGNED D.M.L.
DRAWN E.J.J.
CHECKED L.P.A.
PROJ. ENGR. P.A.D.

LUIS P. AMARAL P.E.
No. 47573

HAZEN AND SAWYER
Environmental Engineers & Scientists
4000 Hollywood Boulevard, Suite 750N
Hollywood, Florida 33021
Certificate of Authorization Number: 2771

SCALE N.T.S.

CONTRACT: –
CLIENTS PROJECT:
ENGINEERS PROJECT: 40406
CAD REFERENCE: 40406I21

CITY OF HALLANDALE BEACH
UTILITIES DEPARTMENT

6 MGD MEMBRANE SOFTENING W.T.P.

INSTRUMENTATION AND CONTROL DETAIL SCHEMATICS SHEET 2

DATE: JANUARY 2008
SHEET: 62 OF 162
DRAWING: I-21

RECORD DRAWING

PLOT DATE: 2/11/2008 10:20 AM BY: AMEDINA

XREFs=

File = O:\40406\40406-001\Drawings\INSTR\40406I21 Saved by GDIAZ Save date = 1/30/2008 3:17 PM

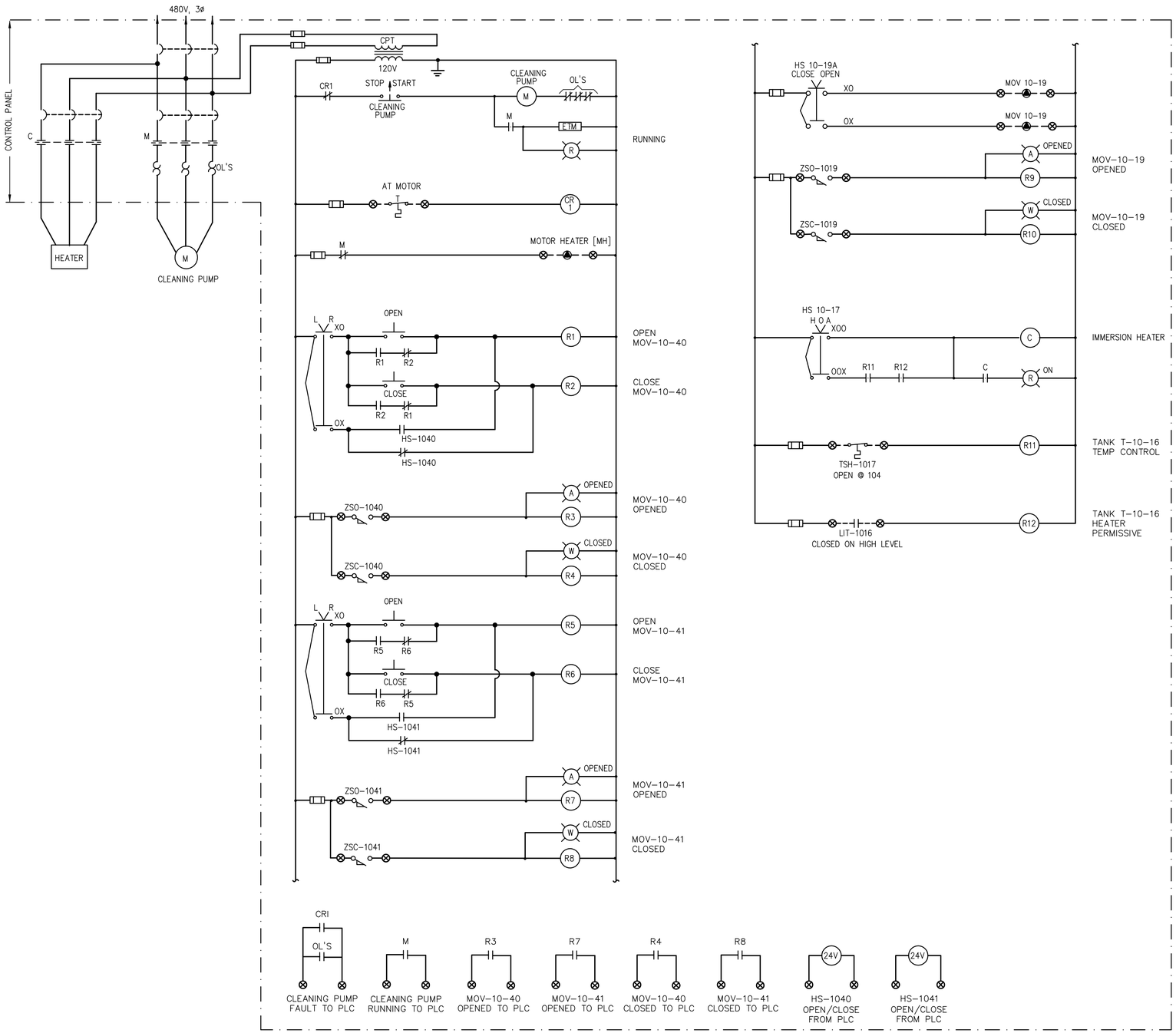

MEMBRANE CLEANING SYSTEM CONTROL PANEL SCHEMATIC

NOT TO SCALE

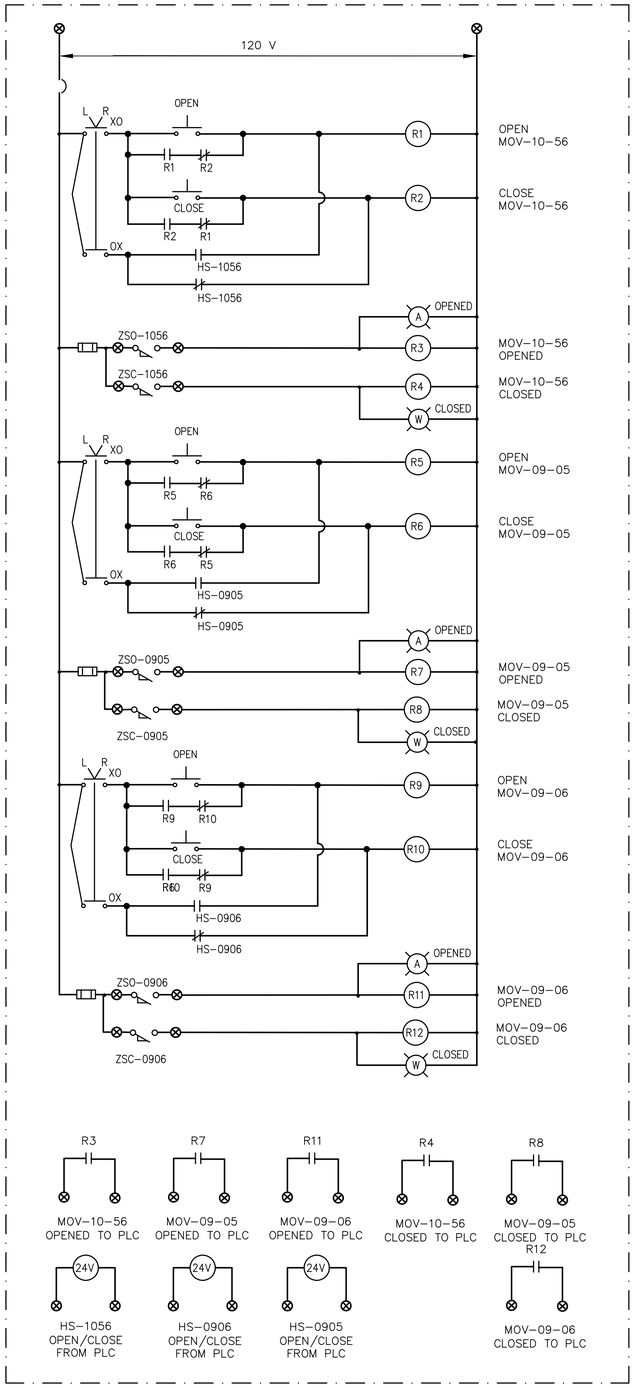

STARTUP VALVE CONTROL PANEL

NO.	DATE	ISSUED FOR	BY
2	01/08	RECORD DRAWING	P.A.D.
1	10/03	BID SET	L.P.A.

DESIGNED D.M.L.
DRAWN E.J.J.
CHECKED L.P.A.
PROJ. ENGR. P.A.D.

LUIS P. AMARAL P.E.
No. 47573

HAZEN AND SAWYER
Environmental Engineers & Scientists
4000 Hollywood Boulevard, Suite 750N
Hollywood, Florida 33021
Certificate of Authorization Number: 2771

SCALE NONE

CONTRACT: –
CLIENTS PROJECT:
ENGINEERS PROJECT: 40406
CAD REFERENCE: 40406I22

CITY OF HALLANDALE BEACH
UTILITIES DEPARTMENT

6 MGD MEMBRANE SOFTENING W.T.P.

INSTRUMENTATION AND CONTROL
CLEANING SYSTEM PANEL

DATE: JANUARY 2008
SHEET: 63 OF 162
DRAWING: I-22

RECORD DRAWING

PLOT DATE: 2/11/2008 9:59 AM BY: AMEDINA

XREFs:

PLOT DATE 10/01/03 10:13am FILE= H:\40406\INSTR\40406I22 by JSEPULVEDA XREF FILE = NONE

File = O:\40406\40406-001\Drawings\INSTR\40406I22 Saved by GDIAZ Save date = 1/30/2008 3:18 PM

STRUCTURAL GENERAL NOTES

DESIGN:

DESIGN OF STRUCTURES IS BASED UPON AND GOVERNED BY FLORIDA BUILDING CODE (LATEST EDITION), LOCAL CODES, AMERICAN CONCRETE INSTITUTE BUILDING CODE (LATEST EDITION), AND PROJECT SPECIFICATIONS.

LIVE LOADS:

BUILDING/STRUCTURE \ LEVEL	ROOF	SECOND FLOOR	FIRST/BOTTOM FLOOR	PROCESS AREA /CHEM. ROOMS
NF PROCESS BUILDING	40 P.S.F.	100 P.S.F.	300 P.S.F.	300 P.S.F.
DEGASIFIER STRUCTURE	150 P.S.F.	–	300 P.S.F.	–
PUMP STATION	–	–	300 P.S.F.	–
EMERGENCY GENERATOR BLDG	40 P.S.F.	–	300 P.S.F.	–

ALL STAIRWAYS, LANDINGS AND PLATFORMS ARE DESIGNED FOR A LIVE LOAD EQUAL TO 100 P.S.F.

WIND LOADS:

STRUCTURES/BUILDINGS ARE DESIGNED IN ACCORDANCE WITH ASCE 7–98 ("MINIMUM DESIGN LOADS FOR BUILDINGS AND OTHER STRUCTURES") SUBJECT TO THE CONDITIONS SPECIFIED BY THE FLORIDA BUILDING CODE. THE FOLLOWING ARE THE WIND DESIGN PARAMETERS:

BUILDING/STRUCTURE \ PARAMETER	BASIC WIND SPEED	IMPORTANCE FACTOR	BUILDING CATEGORY	EXPOSURE CATEGORY	INTERNAL PRESSURE COEF
NF PROCESS BUILDING (E.O.C.) **	200 M.P.H.	1.0	IV	C	+/– 0.55
DEGASIFIER STRUCTURE	150 M.P.H.	1.15	IV	C	+/– 0.55
EMERGENCY GENERATOR BLDG	150 M.P.H.	1.15	IV	C	+/– 0.55

** THE NF PROCESS BUILDING IS DESIGNED TO FUNCTION AS AN EMERGENCY OPERATION CENTER (E.O.C.). IN ADDITION TO THE FLORIDA BUILDING CODE AND ASCE 7–98, THE MAIN WIND–FORCE RESISTING SYSTEM OF THE E.O.C. IS DESIGNED IN ACCORDANCE WITH THE FEDERAL EMERGENCY MANAGEMENT AGENCY (FEMA) GUIDE FOR "DESIGN AND CONSTRUCTION GUIDANCE FOR COMMUNITY SHELTERS," FIRST EDITION. DESIGN WIND PRESSURES FOR COMPONENTS AND CLADDING OF THE E.O.C. ARE BASED ON 150 M.P.H. WIND LOAD.

COMPONENTS AND CLADDING, INCLUDING DOORS, WINDOWS, AND LOUVERS, SHALL BE DESIGNED FOR THE WIND PRESSURES SHOWN ON THE ARCHITECTURAL DRAWINGS. IN ADDITION TO THE INDICATED WIND PRESSURE, ALL PARTS OR SYSTEMS OF THE STRUCTURE ENVELOPE SUCH AS, BUT NOT LIMITED, TO EXTERIOR WALLS, ROOF, OUTSIDE DOORS, SKYLIGHTS, GLAZING AND GLASS BLOCK SHALL MEET IMPACT TEST CRITERIA AS DEFINED IN SECTION 1626 OF THE FLORIDA BUILDING CODE OR BE PROTECTED WITH AN EXTERNAL PROTECTION DEVICE THAT MEETS THE IMPACT TEST CRITERIA.

FLOOD LOADS:

ALL STRUCTURES ARE DESIGNED TO WITHSTAND A 100–YEAR FLOOD EVENT. THE 100–YEAR FLOOD ELEVATION IS DEFINED AS ELEVATION 10.00.

CONCRETE:

ALL CONCRETE SHALL BE CLASS "A" CONCRETE UNLESS NOTED OTHERWISE (U.N.O.) ON PLANS OR SPECIFICATION. CONCRETE SHALL REACH DESIRED MINIMUM COMPRESSIVE STRENGTH 28 DAYS AFTER POUR (AS FOLLOWS).

CLASS "A" – ALL CONCRETE (U.N.O.)	F'c	=	4,000 P.S.I.
CLASS "B" – PEA–ROCK CONCRETE, PUMP–ABLE	F'c	=	4,000 P.S.I.
CLASS "C" – THRUST BLOCKS, DUCTBANKS, ETC	F'c	=	3,000 P.S.I.
FLOWABLE FILL – PIPE TRENCHES	F'c	=	50–150 P.S.I.
TREMIE CONCRETE – PLACED UNDER WATER	F'c	=	4,000 P.S.I.

REINFORCEMENT:

REINFORCING STEEL SHALL BE DEFORMED, NEW BILLET STEEL, A.S.T.M. A–615 GRADE 60, AS NOTED IN PROJECT SPECIFICATIONS. REINFORCING STEEL SPLICES AND OVERLAPS SHALL BE AS SHOWN ON THE DRAWINGS, AND IN CONFORMANCE WITH LATEST ACI BUILDING CODE.

ALL REINFORCING SHALL BE DETAILED ACCORDING TO THE "MANUAL OF STANDARD PRACTICE FOR DETAILING REINFORCED CONCRETE STRUCTURES" BY ACI STANDARDS.

CONSTRUCTION JOINTS IN POURED WALLS:

ALL JOINTS BELOW GRADE LEVEL AND IN WATER RETAINING STRUCTURES SHALL HAVE A WATERSTOP. WATERSTOPS SHALL BE 6" WIDE X 3/8" THICK (MINIMUM) P.V.C. ALL JOINTS WITHIN CHEMICAL AREAS SHALL HAVE A CHEMICAL RESISTANT WATERSTOP, SEE PROJECT SPECIFICATIONS.

ALL EXPANSION JOINTS SHALL HAVE A 9" WIDE X 3/8" THICK (MINIMUM) P.V.C. CENTER BULB WATERSTOP, UNLESS NOTED OTHERWISE ON DRAWINGS. SEE PROJECT SPECIFICATIONS FOR SELECTIONS, TYPES AND REQUIRED INFORMATION.

CONCRETE MASONRY NOTES:

UNITS SHALL BE LOAD BEARING BLOCKS (NORMAL HEIGHT) CONFORMING TO ASTM C 90, GRADE N–1 (f'm = 1,500 psi).

HORIZONTAL REINFORCEMENT SHALL BE PLACED AT 16 INCHES ON CENTER AND SHALL CONSIST OF STANDARD No.8 LADDER TYPE FOR REINFORCED MASONRY. PROVIDE ANCHORS/TIES TO ADJACENT REINFORCED CONCRETE AS SPECIFIED.

VERTICAL REINFORCEMENT SHALL BE PROVIDED FOR ALL MASONRY WALLS AS SPECIFIED ON THE STRUCTURAL DRAWINGS.

MORTAR SHALL BE TYPE "M" WITH AVERAGE COMPRESSIVE STRENGTH AT 28 DAYS OF 2,500 p.s.i.

MASONRY GROUT SHALL CONFORM TO ASTM C 476.

SEE ARCHITECTURAL DRAWINGS FOR MASONRY WALL LOCATIONS AND REQUIRED FIRE RATINGS.

LINTEL NOTES:

LINTELS OVER ALL EXTERIOR/INTERIOR MASONRY OPENINGS SHALL BE CONSTRUCTED OF REINFORCED CONCRETE BLOCK UNLESS NOTED OTHERWISE ON THE DRAWINGS.

AT LOCATIONS WHERE MASONRY OPENINGS ABOUT CONCRETE COLUMNS, MINIMUM 8 INCH DEEP HOLES SHALL BE DRILLED IN THE CONCRETE AND DOWEL BARS SHALL BE INSERTED. DOWELS SHALL BE SAME SIZE AND SPACING AS LINTEL REINFORCING. DOWELS SHALL BE ANCHORED WITH EPOXY GROUT. DOWEL BARS SHALL BE LAPPED A MINIMUM OF 30 BAR DIAMETERS WITH LINTEL REINFORCEMENT.

OPENINGS IN CAST–IN–PLACE WALLS AND SLABS:

FOR SLEEVES, WALL CASTINGS AND OPENINGS IN WALLS AND SLABS, SEE MECHANICAL, HVAC, ELECTRICAL, PLUMBING AND STRUCTURAL DRAWINGS. SEE STRUCTURAL STANDARD DETAILS FOR REINFORCING REQUIREMENTS AT PENETRATIONS AND OPENINGS.

STRUCTURAL STEEL:

STRUCTURAL STEEL SHALL CONFORM TO THE FOLLOWING ASTM STANDARDS:

1 ALL SHAPES – ASTM A572 GRADE 50

2 STRUCTURAL TUBING – ASTM A501 OR ASTM A500 GRADE B

3 ANGLES AND PLATES – ASTM A36

FASTENERS SHALL BE IN ACCORDANCE WITH SECTION 05050 (METAL FASTENING) OF THE SPECIFICATION AND SHALL BE INSTALLED IN ACCORDANCE TO AISC "SPECIFICATION FOR STRUCTURAL JOINTS USING ASTM A325 OR A490 BOLTS". STAINLESS STEEL FASTENERS SHALL BE TYPE 316.

WELDING:

WELDING SHALL BE DONE BY A CERTIFIED ARC WELDER, AND SHALL BE IN ACCORDANCE TO THE LATEST EDITION OF THE AWS – "STRUCTURAL WELDING CODE" AND AWS ARTICLE D1.1.

ALUMINUM ALLOY SHAPES:

ALL ALUMINUM SHAPES SHALL BE 6061–T6 ALLOY THROUGHOUT THE PROJECT, UNLESS NOTED OTHERWISE.

ALL FASTENERS SHALL BE TYPE 316 S.S. UNLESS NOTED OTHERWISE (U.N.O.).

ALL ALUMINUM DESIGN MUST MEET THE STANDARD AND PRACTICE OF "THE ALUMINUM ASSOCIATION INCORPORATED."

DESIGN OF ALL ALUMINUM STRUCTURES SHALL CONFORM TO "THE ALUMINUM ASSOCIATION, INC.", SPECIFICATIONS FOR ALUMINUM STRUCTURES.

FABRICATION AND INSTALLATION OF ALUMINUM MEMBERS SHALL CONFORM TO THE STANDARD AND PRACTICE OF "THE ALUMINUM ASSOCIATION, INC.."

FOR MORE COMPLETE INFORMATION, SEE PROJECT SPECIFICATIONS.

FOOTINGS AND MAT FOUNDATIONS:

FOOTINGS AND MAT FOUNDATIONS ARE DESIGNED FOR AN ALLOWABLE SOIL BEARING CAPACITY OF 3,000 P.S.F.

EXCAVATION AND SUBSURFACE PREPARATION:

EXCAVATION AND SUBSURFACE PREPARATION SHALL BE AS SPECIFIED IN SECTION 02224 OF THE SPECIFICATIONS. SUBGRADE SHALL BE COMPACTED TO A MINIMUM OF 95 PERCENT OF MODIFIED PROCTOR MAXIMUM DRY DENSITY PER ASTM D1557.

NO.	DATE	ISSUED FOR	BY
3	01/08	RECORD DRAWING	P.A.D.
2	10/03	BID SET	S.J.
1	10/03	BLDG. DEPT. REVISIONS	S.J.

DESIGNED W.G.L.
DRAWN W.G.L.
CHECKED S.J.
PROJ. ENGR. P.A.D.

SHAJAN JOYKUTTY P.E.
No. 43323

HAZEN AND SAWYER
Environmental Engineers & Scientists
4000 Hollywood Boulevard, Suite 750N
Hollywood, Florida 33021
Certificate of Authorization Number: 2771

SCALE N.T.S.

CONTRACT: –
CLIENTS PROJECT:
ENGINEERS PROJECT: 40406
CAD REFERENCE: 40406S01

CITY OF HALLANDALE BEACH City of Choice
CITY OF HALLANDALE BEACH
UTILITIES DEPARTMENT

6 MGD MEMBRANE SOFTENING W.T.P.

STRUCTURAL GENERAL NOTES

DATE: JANUARY 2008
SHEET: 64 OF 162
DRAWING: S–1

RECORD DRAWING

PLOT DATE: 2/8/2008 4:59 PM BY: AMEDINA

XREFs= ..\TBLOCK\40406–TB

File = O:\40406\40406–001\Drawings\STRU\40406S01 Saved by NPENA Save date = 1/30/2008 3:20 PM

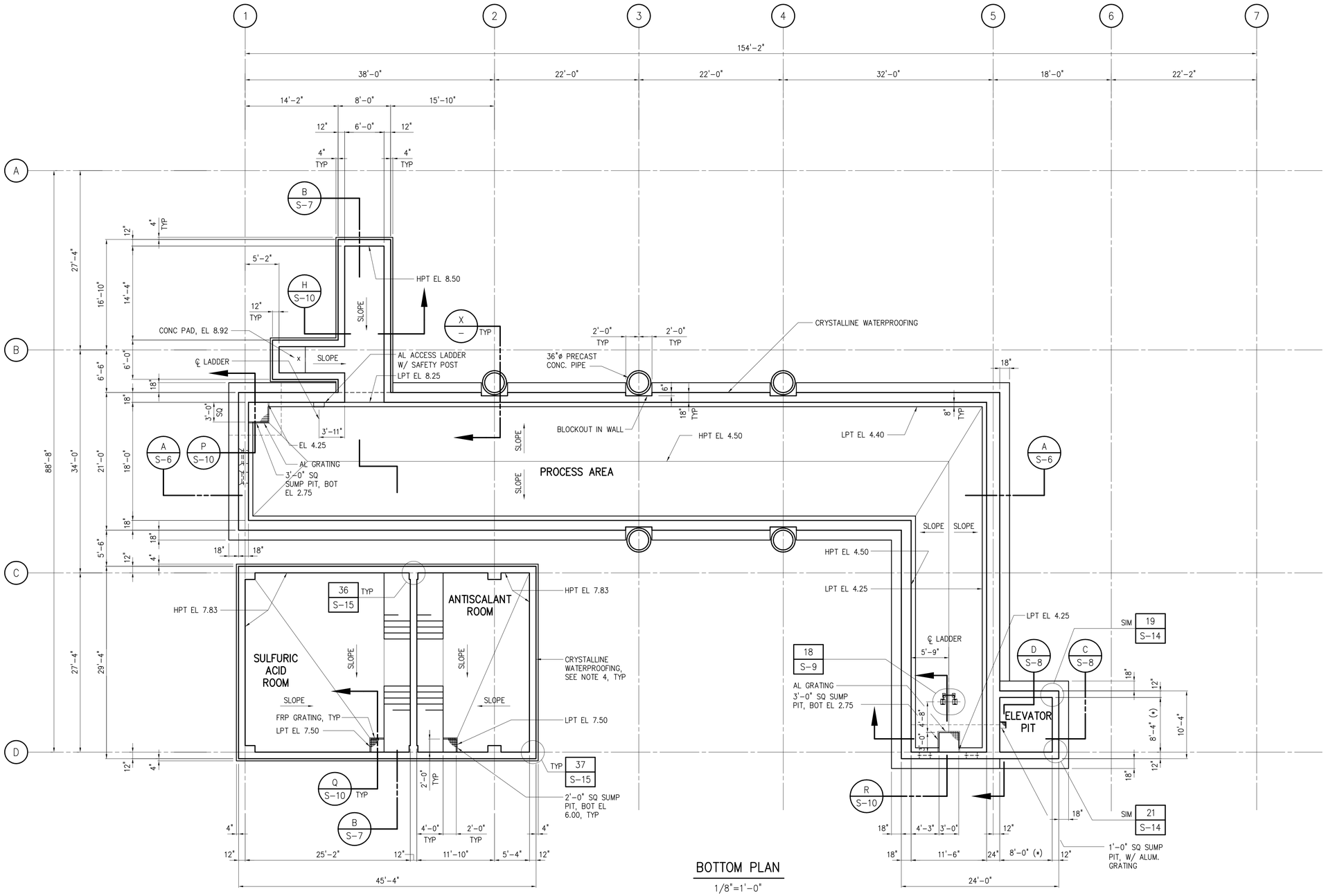

BOTTOM PLAN

1/8"=1'-0"

NOTES:

1. FOR COLUMN SCHEDULE, SEE DRAWING S-14.
2. FOR BEAM SCHEDULE, SEE DRAWING S-15.
3. FOR STRUCTURAL STANDARD DETAILS, SEE DRAWINGS S-23 THRU S-26.
4. PROVIDE WATERPROOFING ON EXTERIOR SURFACE OF PROCESS BUILDING WALLS BELOW GRADE. SEE SPECIFICATION IN SECTION 07100.

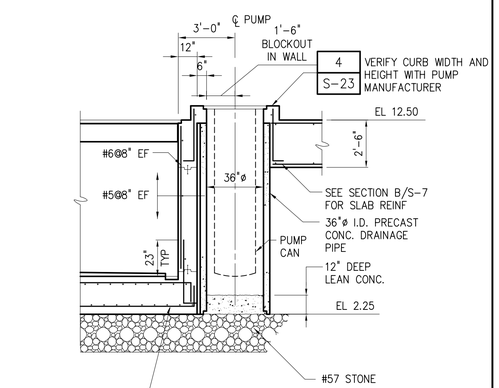

SECTION X

1/4"=1'-0"

NOTE:

(*) CONTRACTOR SHALL CONFIRM WITH SUPPLIER

NO.	DATE	ISSUED FOR	BY
4	01/08	RECORD DRAWING	P.A.D.
3	10/21/05	TRENCH MODIFICATION	S.J.
2	10/03	BID SET	S.J.
1	10/03	BLDG. DEPT. REVISIONS	S.J.

DESIGNED W.G.L.
DRAWN W.G.L.
CHECKED S.J.
PROJ. ENGR. P.A.D.

SHAJAN JOYKUTTY P.E.
No. 43323

HAZEN AND SAWYER
Environmental Engineers & Scientists
4000 Hollywood Boulevard, Suite 750N
Hollywood, Florida 33021
Certificate of Authorization Number: 2771

SCALE: AS NOTED

CONTRACT: –
CLIENTS PROJECT:
ENGINEERS PROJECT: 40406
CAD REFERENCE: 40406S02

CITY OF HALLANDALE BEACH
UTILITIES DEPARTMENT

6 MGD MEMBRANE SOFTENING W.T.P.

NF PROCESS BUILDING

BOTTOM PLAN

DATE: JANUARY 2008
SHEET: 65 OF 162
DRAWING: S-2

RECORD DRAWING

PLOT DATE: 2/8/2008 4:59 PM BY: AMEDINA

XREFs= ..\200\PT-PB-SB,..\200\PT-S16-S

File = O:\40406\40406-001\Drawings\STRU\40406S02 Saved by NPENA Save date = 1/31/2008 11:54 AM

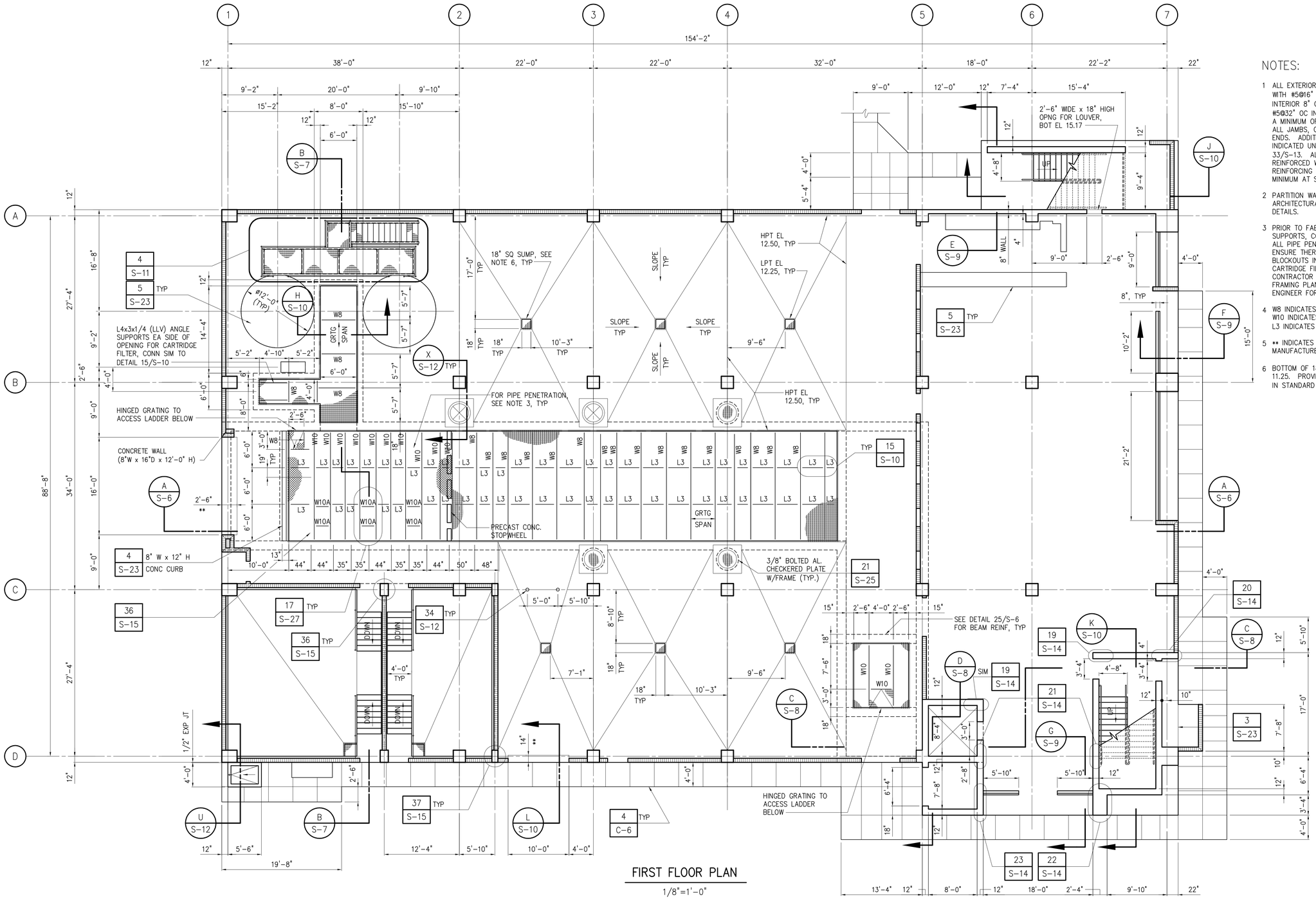

FIRST FLOOR PLAN

1/8"=1'-0"

NOTES:

1. ALL EXTERIOR 8" CMU WALLS SHALL BE REINFORCED WITH #5@16" OC IN FULLY GROUTED CELLS. ALL INTERIOR 8" CMU WALLS SHALL BE REINFORCED WITH #5@32" OC IN FULLY GROUTED CELLS. ADDITIONALLY, A MINIMUM OF ONE #5 BAR SHALL BE PLACED AT ALL JAMBS, CORNERS, INTERSECTIONS AND WALL ENDS. ADDITIONAL #5 BARS SHALL BE PLACED AS INDICATED UNDER PRECAST CANOPIES, SEE DETAIL 33/S-13. ALL LINTELS AND BOND BEAMS SHALL BE REINFORCED WITH TWO #5 BARS CONTINUOUSLY. LAP REINFORCING BARS 48 BAR DIAMETERS OR 30 INCHES MINIMUM AT SPLICES.
2. PARTITION WALLS NOT SHOWN FOR CLARITY, SEE ARCHITECTURAL DRAWINGS FOR LOCATION AND DETAILS.
3. PRIOR TO FABRICATION OF GRATING AND GRATING SUPPORTS, CONTRACTOR SHALL VERIFY LOCATION OF ALL PIPE PENETRATIONS AND CARTRIDGE FILTERS TO ENSURE THERE ARE NOT INTERFERENCES. PROVIDE BLOCKOUTS IN GRATING AS REQUIRED SO THAT THE CARTRIDGE FILTERS BEAR DIRECTLY ON FRAMING. CONTRACTOR SHALL SUBMIT ANY CHANGES TO THE FRAMING PLAN SHOWN ON THE DRAWINGS TO THE ENGINEER FOR APPROVAL.
4. W8 INDICATES W8x18 BEAM.
   W10 INDICATES W10x88 BEAM.
   L3 INDICATES L3x3x1/4 BRACE.
5. ** INDICATES DIMENSION TO BE VERIFIED WITH DOOR MANUFACTURER.
6. BOTTOM OF 18" SQUARE SUMP SHALL BE ELEVATION 11.25. PROVIDE ADDITIONAL REINFORCING AS SHOWN IN STANDARD DETAIL 12/S-23.

NO.	DATE	ISSUED FOR	BY
5	01/08	RECORD DRAWING	P.A.D.
4	4/12/06	FIELD REVISION / CLARIFICATION	S.J.
3	10/21/05	TRENCH MODIFICATION	S.J.
2	10/03	BID SET	S.J.
1	10/03	BLDG. DEPT. REVISIONS	S.J.

DESIGNED W.G.L.
DRAWN W.G.L.
CHECKED S.J.
PROJ. ENGR. P.A.D.

SHAJAN JOYKUTTY P.E.
No. 43323

HAZEN AND SAWYER
Environmental Engineers & Scientists
4000 Hollywood Boulevard, Suite 750N
Hollywood, Florida 33021
Certificate of Authorization Number: 2771

SCALE 1/8" = 1'-0"

CONTRACT: –
CLIENTS PROJECT:
ENGINEERS PROJECT: 40406
CAD REFERENCE: 40406S03

CITY OF HALLANDALE BEACH
UTILITIES DEPARTMENT

6 MGD MEMBRANE SOFTENING W.T.P.

NF PROCESS BUILDING

FIRST FLOOR PLAN

DATE: JANUARY 2008
SHEET: 66 OF 162
DRAWING: S-3

RECORD DRAWING

PLOT DATE: 2/8/2008 4:59 PM BY: AMEDNA

XREFs= ..\200\PT-P1-SB,..\200\PT-P1-WALL

File = O:\40406\40406-001\Drawings\STRU\40406S03 Saved by gdiaz Save date = 1/31/2008 11:32 AM

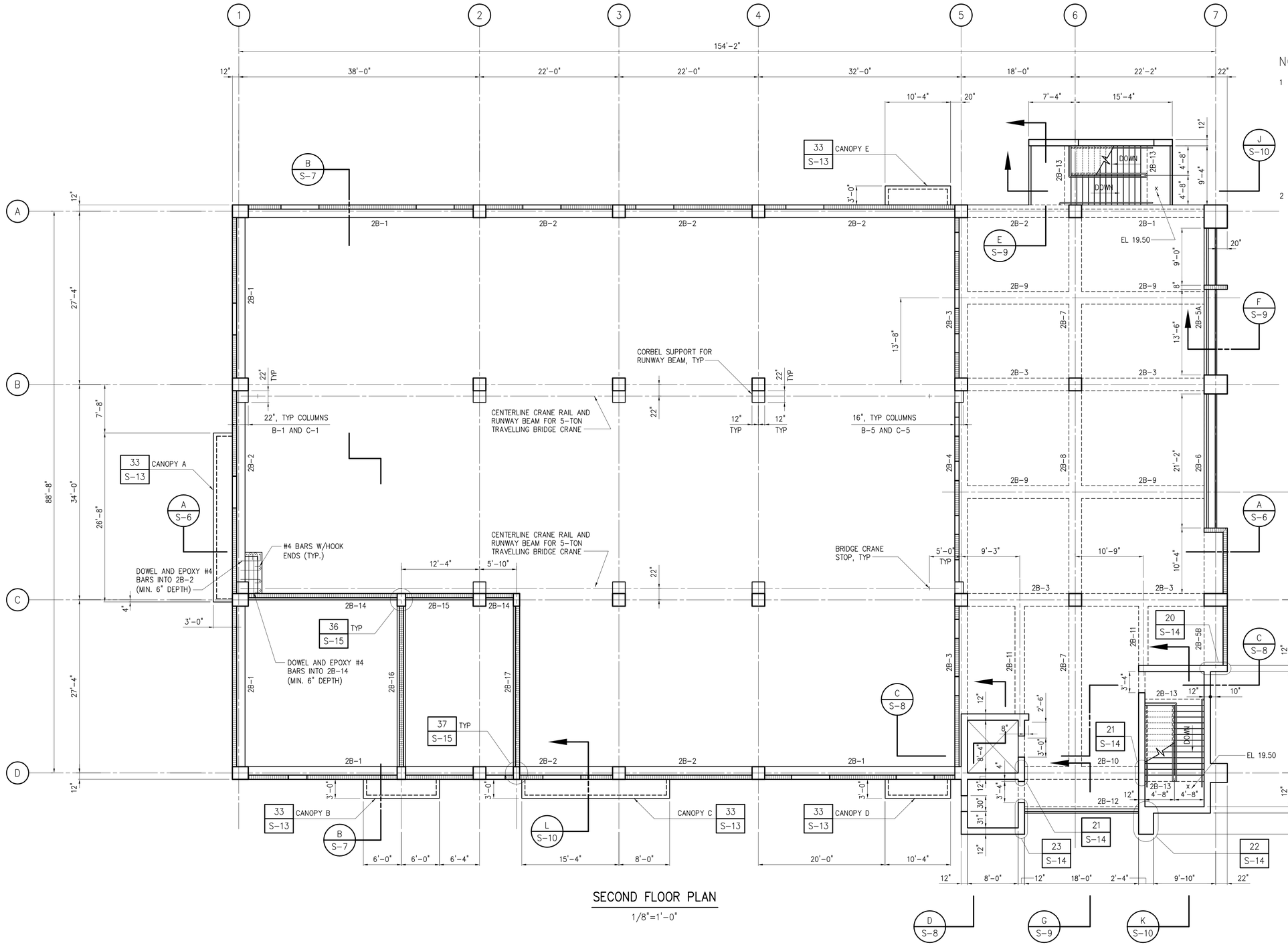

SECOND FLOOR PLAN

1/8"=1'-0"

NOTES:

1. ALL EXTERIOR 8" CMU WALLS SHALL BE REINFORCED WITH #5@16" OC IN FULLY GROUTED CELLS. ALL INTERIOR 8" CMU WALLS SHALL BE REINFORCED WITH #5@32" OC IN FULLY GROUTED CELLS. ADDITIONALLY, A MINIMUM OF ONE #5 BAR SHALL BE PLACED AT ALL JAMBS, CORNERS, INTERSECTIONS AND WALL ENDS. ADDITIONAL #5 BARS SHALL BE PLACED AS INDICATED UNDER PRECAST CANOPIES, SEE DETAIL 33/S-13. ALL LINTELS AND BOND BEAMS SHALL BE REINFORCED WITH TWO #5 BARS CONTINUOUSLY. LAP REINFORCING BARS 48 BAR DIAMETERS OR 30 INCHES MINIMUM AT SPLICES.
2. PARTITION WALLS NOT SHOWN FOR CLARITY, SEE ARCHITECTURAL DRAWINGS FOR LOCATION AND DETAILS.

NO.	DATE	ISSUED FOR	BY
3	01/08	RECORD DRAWING	P.A.D.
2	10/03	BID SET	S.J.
1	10/03	BLDG. DEPT. REVISIONS	S.J.

DESIGNED W.G.L.
DRAWN W.G.L.
CHECKED S.J.
PROJ. ENGR. P.A.D.

SHAJAN JOYKUTTY P.E.
No. 43323

HAZEN AND SAWYER
Environmental Engineers & Scientists
4000 Hollywood Boulevard, Suite 750N
Hollywood, Florida 33021
Certificate of Authorization Number: 2771

SCALE 1/8" = 1'-0"

CONTRACT: –
CLIENTS PROJECT:
ENGINEERS PROJECT: 40406
CAD REFERENCE: 40406S04

CITY OF HALLANDALE BEACH
UTILITIES DEPARTMENT

6 MGD MEMBRANE SOFTENING W.T.P.

NF PROCESS BUILDING

SECOND FLOOR PLAN

DATE: JANUARY 2008
SHEET: 67 OF 162
DRAWING: S-4

RECORD DRAWING

PLOT DATE: 2/6/2008 5:00 PM BY: AMEDINA

XREFs= ..\200\PT-P2-SB,..\200\PT-P2-AB,..\200\PT-P2-WALL

File = O:\40406\40406-001\Drawings\STRU\40406S04 Saved by gdiaz Save date = 1/31/2008 11:34 AM

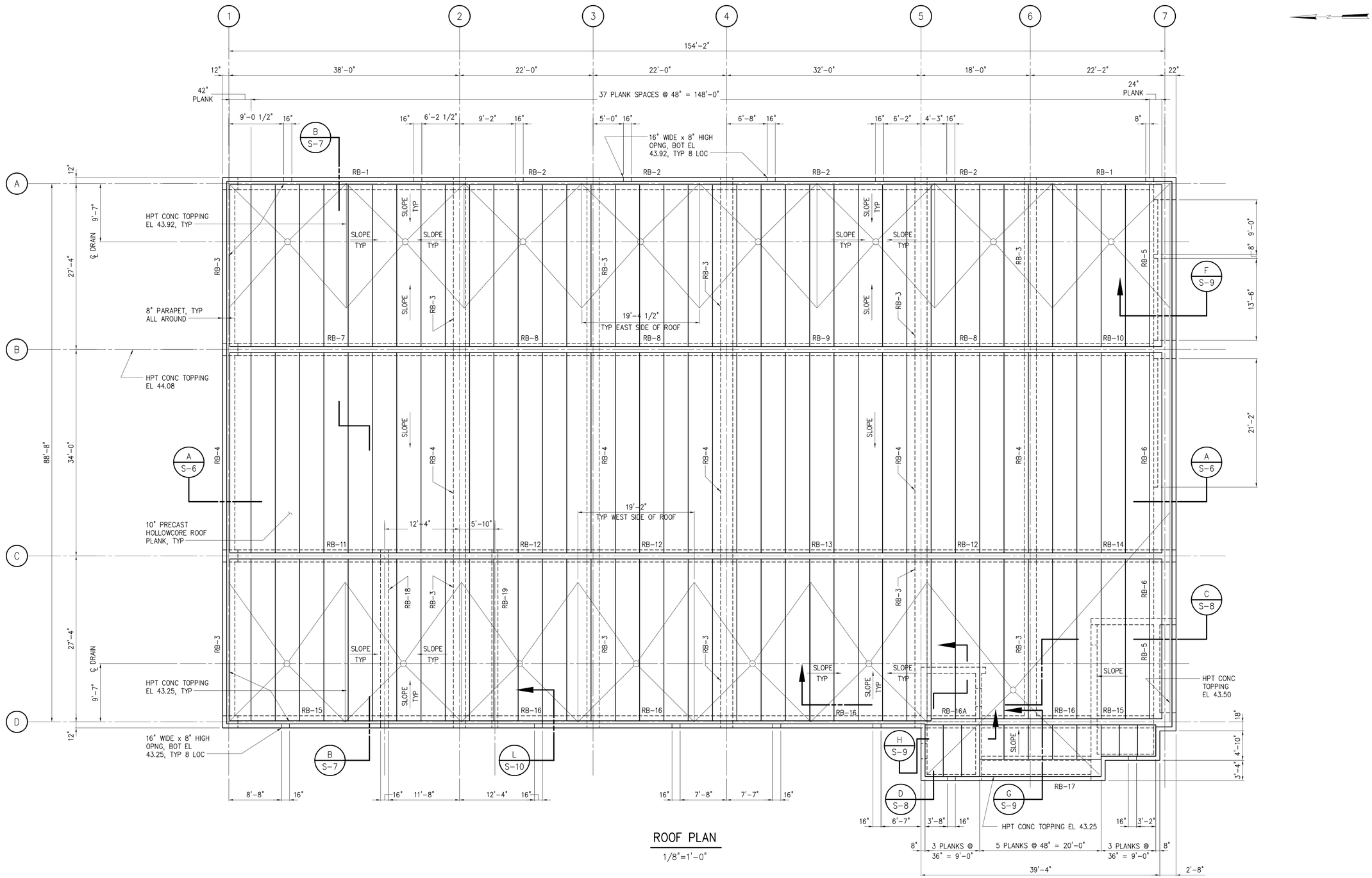

ROOF PLAN

1/8"=1'-0"

NO.	DATE	ISSUED FOR	BY
3	01/08	RECORD DRAWING	P.A.D.
2	10/03	BID SET	S.J.
1	10/03	BLDG. DEPT. REVISIONS	S.J.

DESIGNED W.G.L.
DRAWN W.G.L.
CHECKED S.J.
PROJ. ENGR. P.A.D.

SHAJAN JOYKUTTY P.E.
No. 43323

HAZEN AND SAWYER
Environmental Engineers & Scientists
4000 Hollywood Boulevard, Suite 750N
Hollywood, Florida 33021
Certificate of Authorization Number: 2771

SCALE 1/8" = 1'-0"

CONTRACT: –
CLIENTS PROJECT:
ENGINEERS PROJECT: 40406
CAD REFERENCE: 40406S05

CITY OF HALLANDALE BEACH
UTILITIES DEPARTMENT

6 MGD MEMBRANE SOFTENING W.T.P.

NF PROCESS BUILDING

ROOF PLAN

DATE: JANUARY 2008
SHEET: 68 OF 162
DRAWING: S-5

RECORD DRAWING

PLOT DATE: 2/6/2008 5:00 PM BY: AMEDINA

XREFs= ..\200\PT-PR-AB,..\200\PT-PR-SB

File = O:\40406\40406-001\Drawings\STRU\40406S05 Saved by GDIAZ Save date = 1/31/2008 11:34 AM

NOTES:

1. CONTRACTOR SHALL OVER EXCAVATE THE EXISTING SLUDGE LAYER TO EL 6.00 UNDER THE ENTIRE FOOTPRINT OF THE PROCESS BUILDING, PLUS AN ADDITIONAL TEN FEET. ONCE THE SLUDGE LAYER IS REMOVED TO EL 6.00, THE EXISTING SOIL AT THAT LEVEL SHALL BE PROOFROLLED WITH A 10-TON ROLLER. SOILS WHICH RUT OR DEFLECT UNDER THE PROOFROLLER SHALL BE REPLACED WITH DRY GRANULAR FILL. ELSEWHERE, CONTRACTOR SHALL BACKFILL TO THE REQUIRED ELEVATIONS USING DRY GRANULAR FILL AND COMPACT PER SPECIFICATION.
2. CONTRACTOR SHALL PROVIDE DEWATERING AS REQUIRED DURING CONSTRUCTION OF THE PROCESS BUILDING. CONTRACTOR SHALL SUBMIT DEWATERING PLANS TO THE ENGINEER FOR APPROVAL.

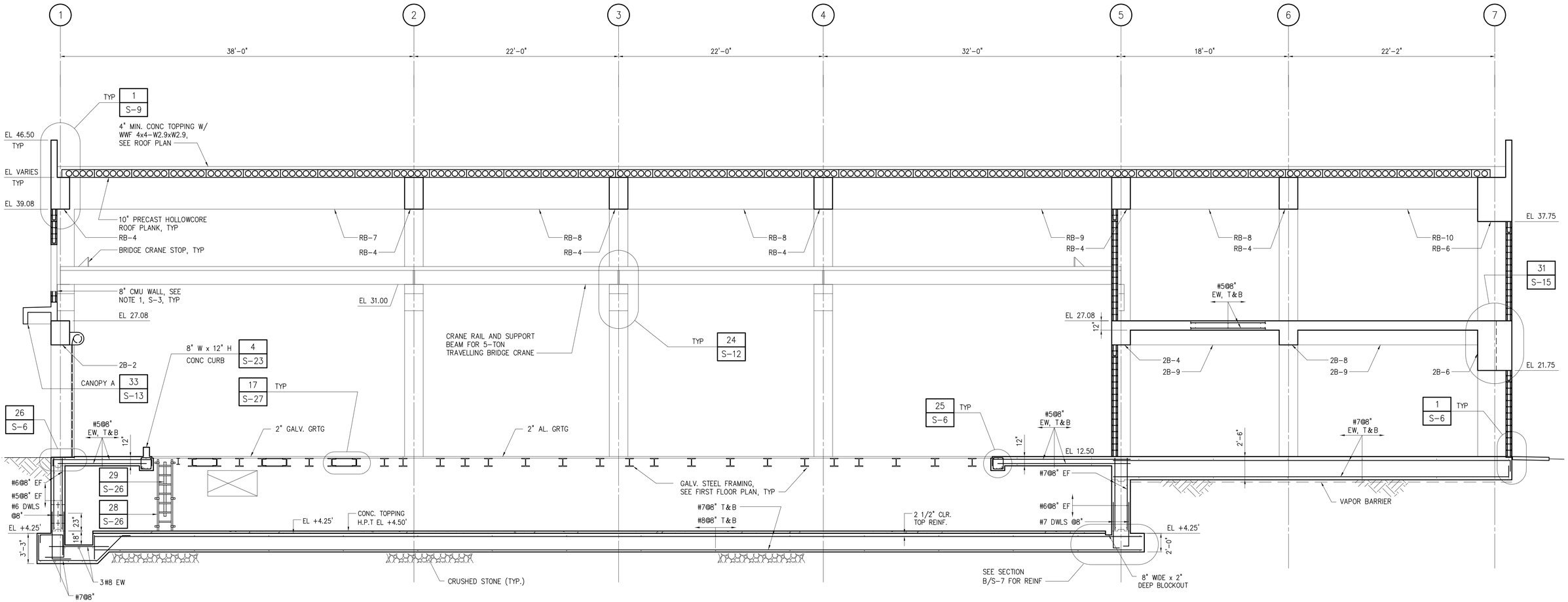

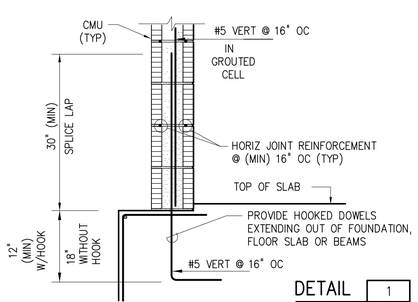

DETAIL 1 / S-6
N.T.S.

SECTION A / S-2
3/16"=1'-0"

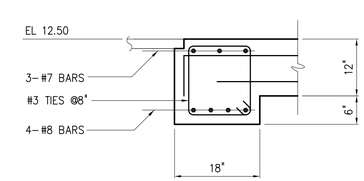

DETAIL 25 / S-6
3/4"=1'-0"

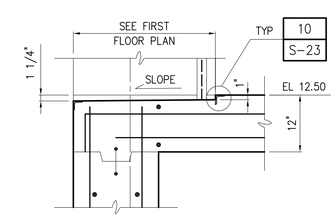

DETAIL 26 / S-6
3/4"=1'-0"

NO.	DATE	ISSUED FOR	BY
4	01/08	RECORD DRAWING	P.A.D.
3	10/21/05	TRENCH MODIFICATION	S.J.
2	10/03	BID SET	S.J.
1	10/03	BLDG. DEPT. REVISIONS	S.J.

DESIGNED W.G.L.
DRAWN W.G.L.
CHECKED S.J.
PROJ. ENGR. P.A.D.

SHAJAN JOYKUTTY P.E.
No. 43323

HAZEN AND SAWYER
Environmental Engineers & Scientists
4000 Hollywood Boulevard, Suite 750N
Hollywood, Florida 33021
Certificate of Authorization Number: 2771

SCALE 3/16" = 1'-0"

CONTRACT: –
CLIENTS PROJECT:
ENGINEERS PROJECT: 40406
CAD REFERENCE: 40406S06

CITY OF HALLANDALE BEACH
UTILITIES DEPARTMENT

6 MGD MEMBRANE SOFTENING W.T.P.

NF PROCESS BUILDING

SECTIONS SHEET 1

DATE: JANUARY 2008
SHEET: 69 OF 162
DRAWING: S-6

RECORD DRAWING

PLOT DATE: 2/8/2008 5:00 PM BY: AMEDINA

XREFs= ..\200\PT-S01-S

File = O:\40406\40406-001\Drawings\STRU\40406S06 Saved by NPENA Save date = 1/30/2008 3:26 PM

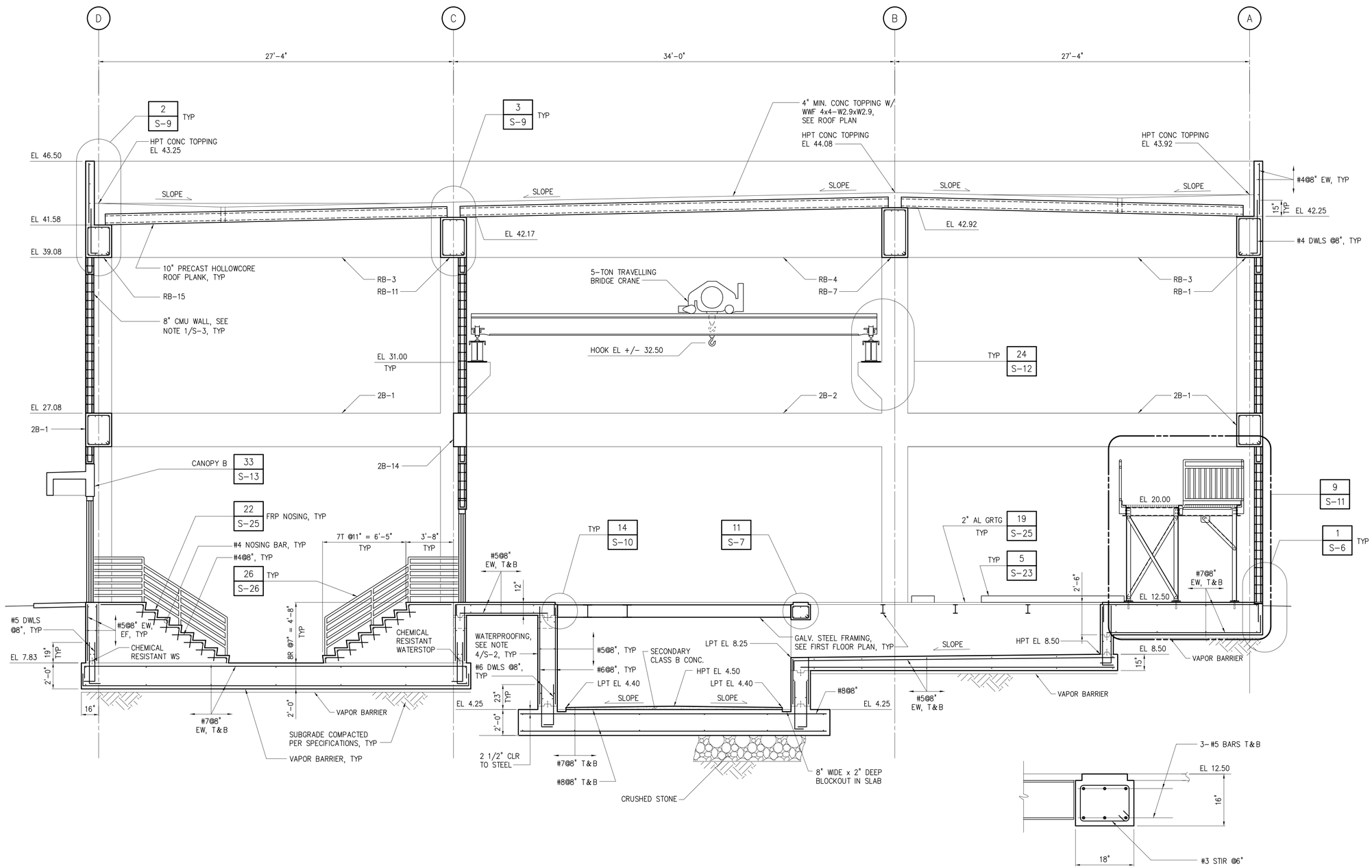

SECTION B S-2
1/4"=1'-0"

DETAIL 11 S-7
3/4"=1'-0"

NO.	DATE	ISSUED FOR	BY
4	01/08	RECORD DRAWING	P.A.D.
3	10/21/05	TRENCH MODIFICATION	S.J.
2	10/03	BID SET	S.J.
1	10/03	BLDG. DEPT. REVISIONS	S.J.

DESIGNED W.G.L.
DRAWN W.G.L.
CHECKED S.J.
PROJ. ENGR. P.A.D.

SHAJAN JOYKUTTY P.E.
No. 43323

HAZEN AND SAWYER
Environmental Engineers & Scientists
4000 Hollywood Boulevard, Suite 750N
Hollywood, Florida 33021
Certificate of Authorization Number: 2771

SCALE 1/4" = 1'-0"

CONTRACT: –
CLIENTS PROJECT:
ENGINEERS PROJECT: 40406
CAD REFERENCE: 40406S07

CITY OF HALLANDALE BEACH
UTILITIES DEPARTMENT

6 MGD MEMBRANE SOFTENING W.T.P.
NF PROCESS BUILDING
SECTIONS SHEET 2

DATE: JANUARY 2008
SHEET: 70 OF 162
DRAWING: S-7

RECORD DRAWING

PLOT DATE: 2/8/2008 5:01 PM BY: AMEDINA
XREFs= ..\200\PT-S02-S
File = O:\40406\40406-001\Drawings\STRU\40406S07 Saved by GDIAZ Save date = 1/30/2008 3:28 PM

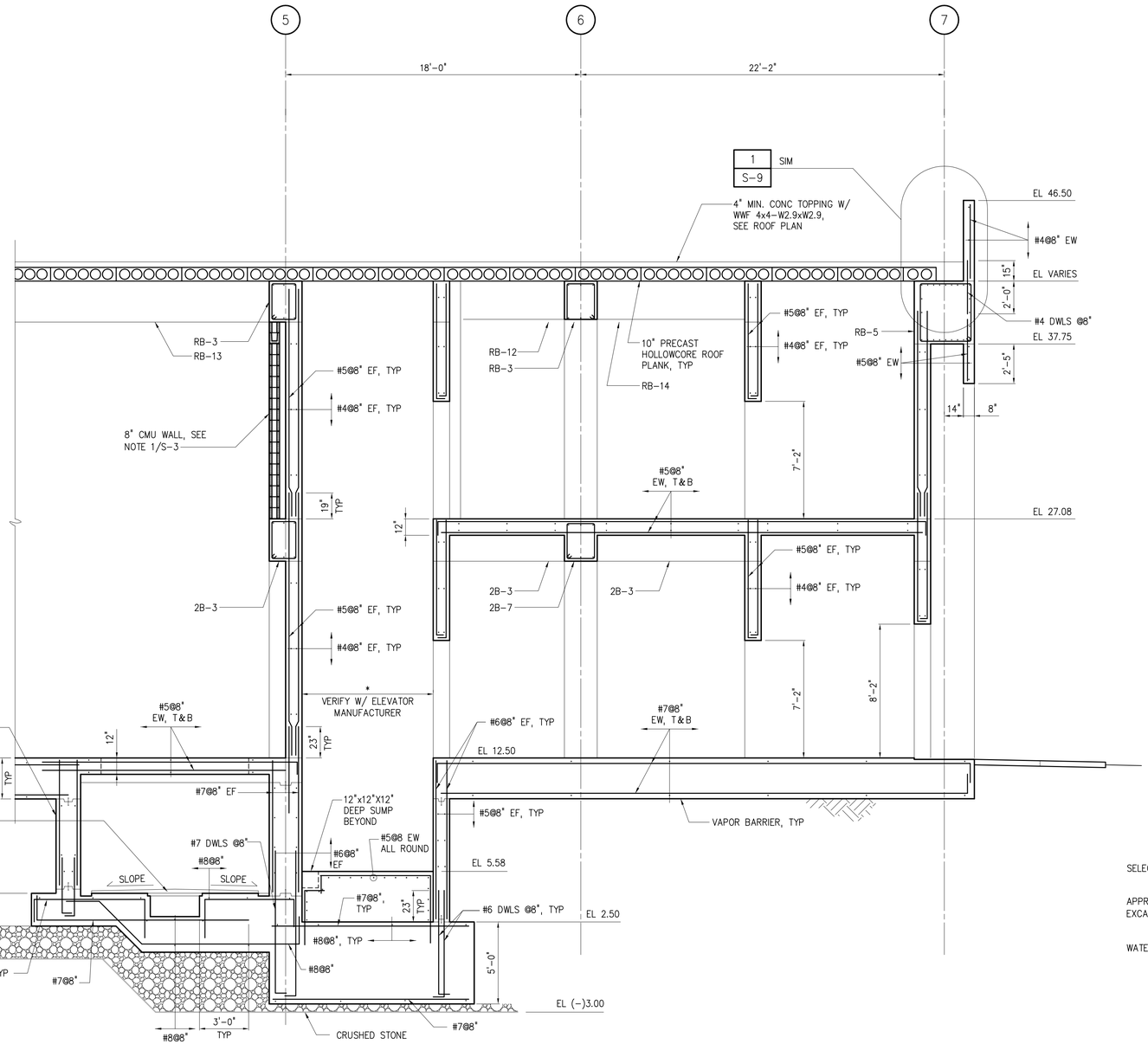

SECTION C S-2
1/4"=1'-0"

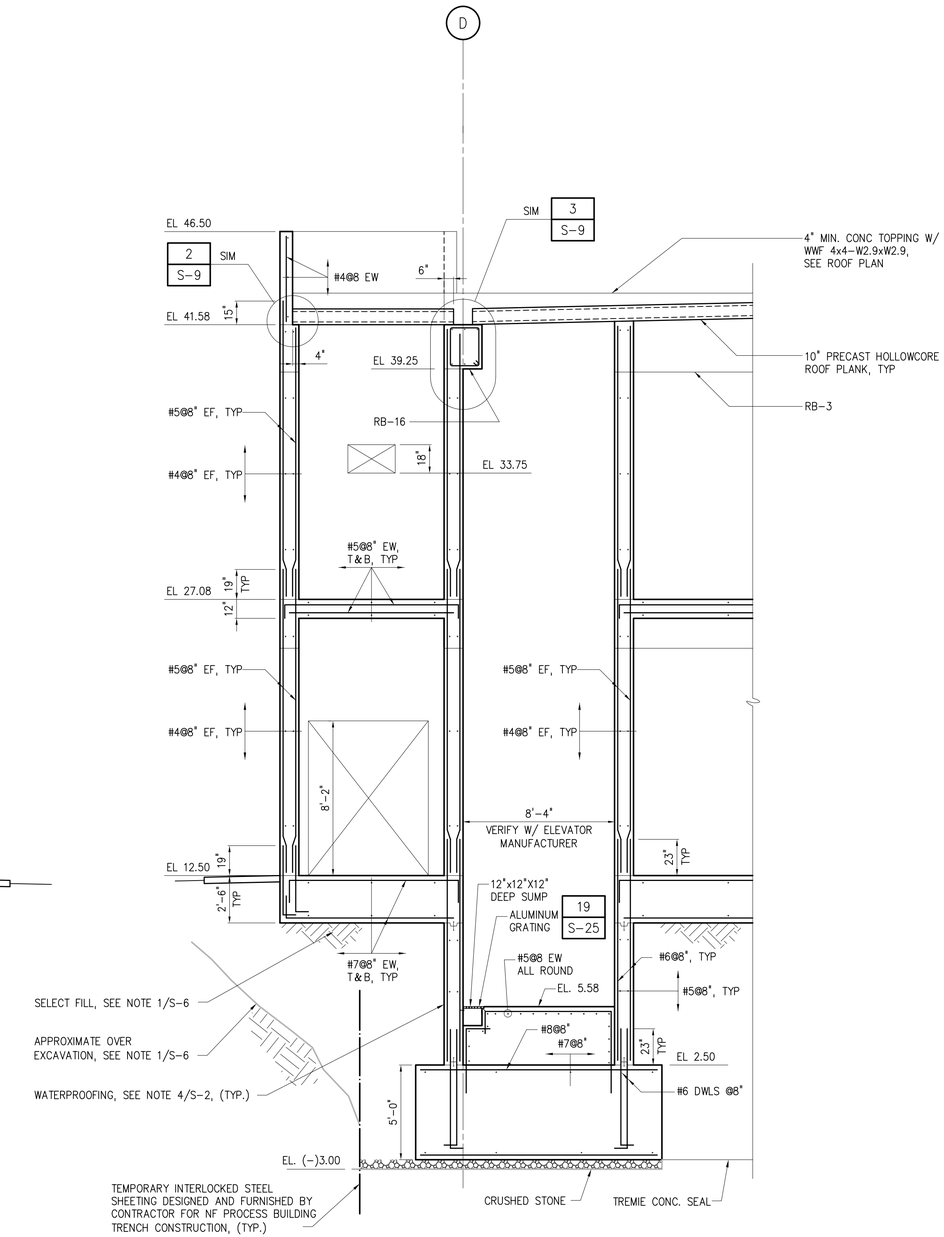

SECTION D S-2
1/4"=1'-0"

NO.	DATE	ISSUED FOR	BY
4	01/08	RECORD DRAWING	P.A.D.
3	10/21/05	TRENCH MODIFICATION	S.J.
2	10/03	BID SET	S.J.
1	10/03	BLDG. DEPT. REVISIONS	S.J.

DESIGNED W.G.L.
DRAWN W.G.L.
CHECKED S.J.
PROJ. ENGR. P.A.D.

SHAJAN JOYKUTTY P.E.
No. 43323

HAZEN AND SAWYER
Environmental Engineers & Scientists
4000 Hollywood Boulevard, Suite 750N
Hollywood, Florida 33021
Certificate of Authorization Number: 2771

SCALE 1/4" = 1'-0"

CONTRACT: –
CLIENTS PROJECT:
ENGINEERS PROJECT: 40406
CAD REFERENCE: 40406S08

CITY OF HALLANDALE BEACH
City of Choice
CITY OF HALLANDALE BEACH
UTILITIES DEPARTMENT

6 MGD MEMBRANE SOFTENING W.T.P.
NF PROCESS BUILDING
SECTIONS SHEET 3

DATE: JANUARY 2008
SHEET: 71 OF 162
DRAWING: S-8

RECORD DRAWING

PLOT DATE: 2/8/2008 5:00 PM BY: AMEDINA

XREFs= ..\200\PT-S03-S,..\200\PT-S04-S

File = O:\40406\40406-001\Drawings\STRU\40406S08 Saved by GDIAZ Save date = 1/31/2008 1:29 PM

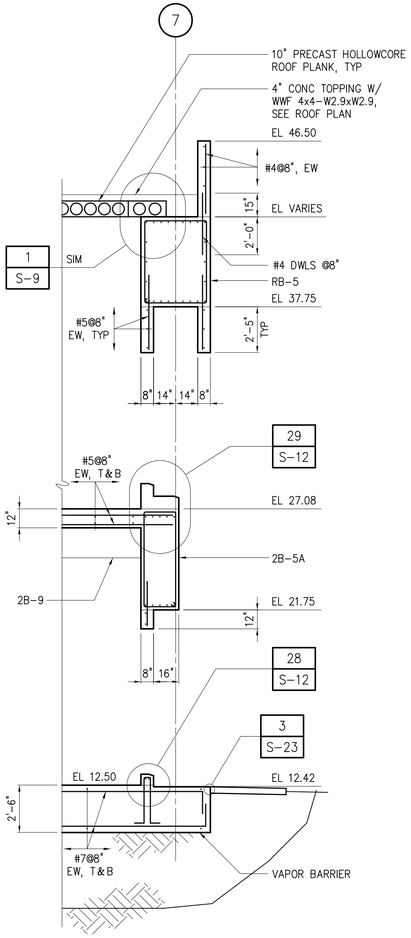

SECTION F 1/4"=1'-0" S-3

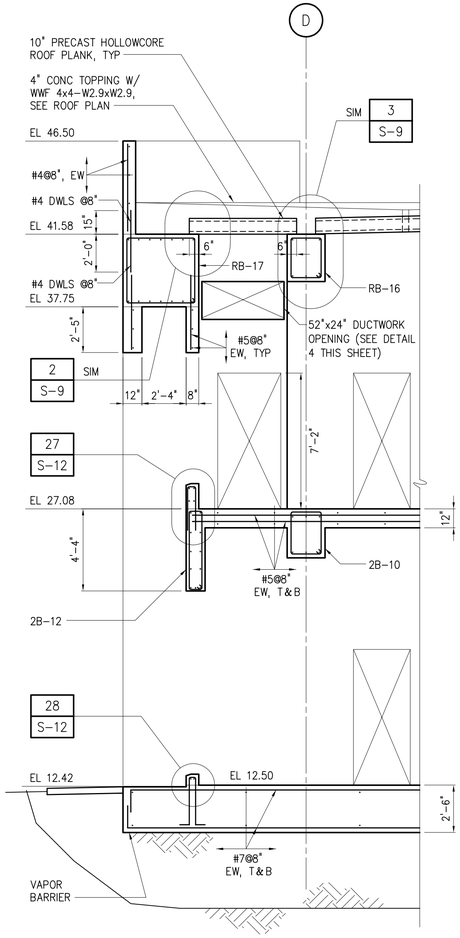

SECTION G 1/4"=1'-0" S-3

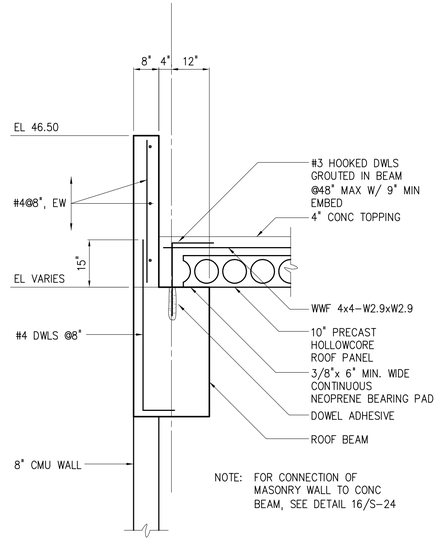

DETAIL 1 1/2"=1'-0" S-6

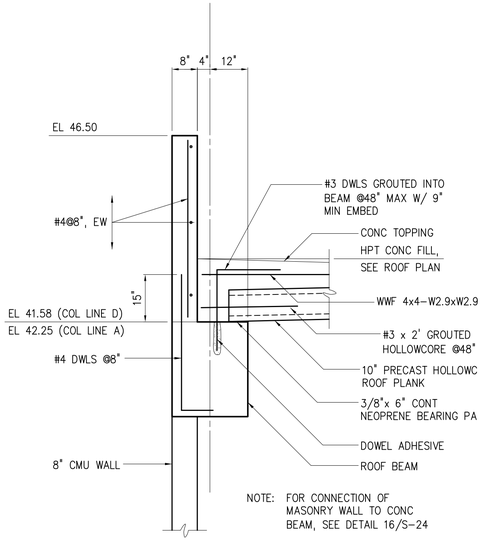

DETAIL 2 1/2"=1'-0" S-7

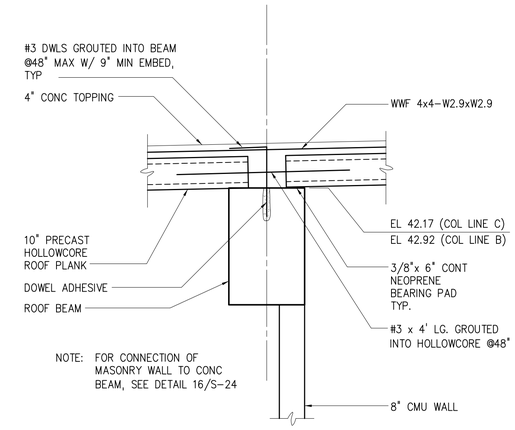

DETAIL 3 1/2"=1'-0" S-7

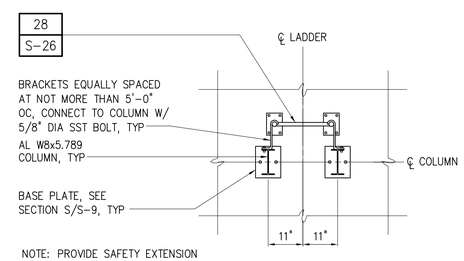

DETAIL 18 1/2"=1'-0" S-2

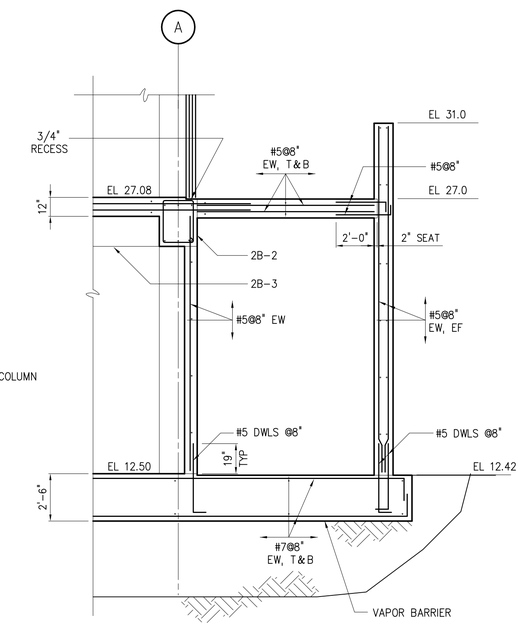

NOTE: SEE ARCHITECTURAL DRAWING A-16 FOR HANDRAIL LOCATION AND DETAILS.

SECTION E 1/4"=1'-0" S-3

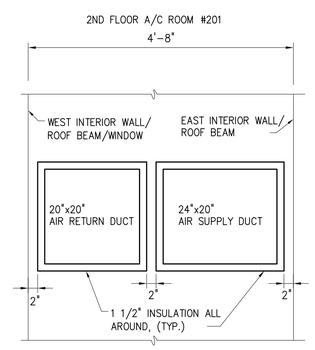

DETAIL 4 3/4"=1'-0" –

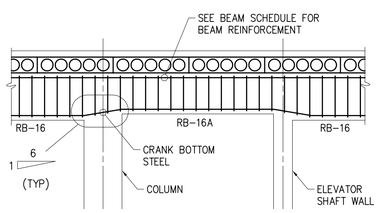

SECTION H 1/4"=1'-0" S-5

NO.	DATE	ISSUED FOR	BY
4	01/08	RECORD DRAWING	P.A.D.
3	10/21/05	TRENCH MODIFICATION	S.J.
2	10/03	BID SET	S.J.
1	10/03	BLDG. DEPT. REVISIONS	S.J.

DESIGNED W.G.L.
DRAWN W.G.L.
CHECKED S.J.
PROJ. ENGR. P.A.D.

SHAJAN JOYKUTTY P.E.
No. 43323

HAZEN AND SAWYER
Environmental Engineers & Scientists
4000 Hollywood Boulevard, Suite 750N
Hollywood, Florida 33021
Certificate of Authorization Number: 2771

SCALE: AS NOTED

CONTRACT: –
CLIENTS PROJECT:
ENGINEERS PROJECT: 40406
CAD REFERENCE: 40406S09

CITY OF HALLANDALE BEACH
UTILITIES DEPARTMENT

6 MGD MEMBRANE SOFTENING W.T.P.

NF PROCESS BUILDING
SECTIONS AND DETAILS
SHEET 1

DATE: JANUARY 2008
SHEET: 72 OF 162
DRAWING: S-9

RECORD DRAWING

PLOT DATE: 2/8/2008 5:00 PM BY: AMEDINA

XREFs= ..\200\PT-S04-S,..\200\PT-DA-S,..\200\PT-DB-S,..\200\PT-DC-S,..\200\PT-S06-S,..\200\PT-S07-S,..\200\PT-PB-SB

File = O:\40406\40406-001\Drawings\STRU\40406S09 Saved by NPENA Save date = 1/31/2008 3:11 PM

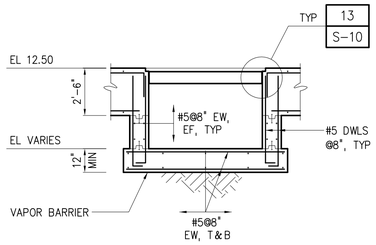

SECTION H S-2
1/4"=1'-0"

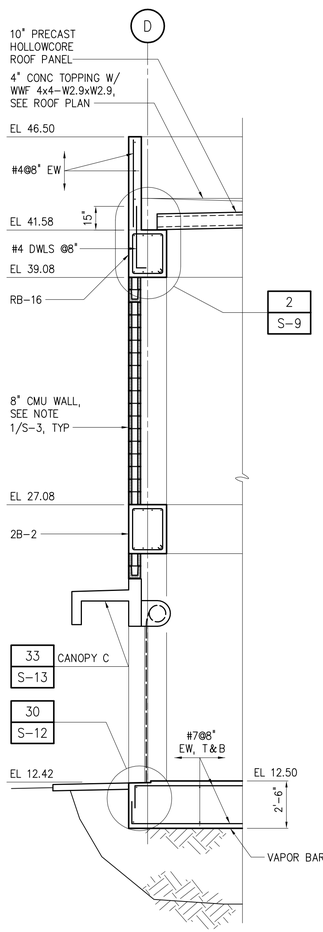

SECTION L S-3
1/4"=1'-0"

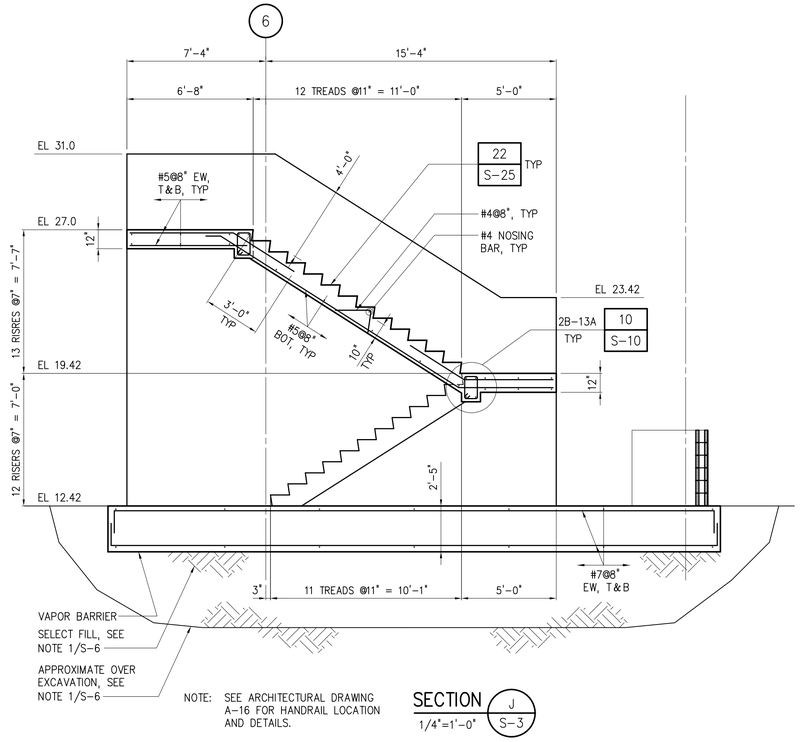

NOTE: SEE ARCHITECTURAL DRAWING A-16 FOR HANDRAIL LOCATION AND DETAILS.

SECTION J S-3
1/4"=1'-0"

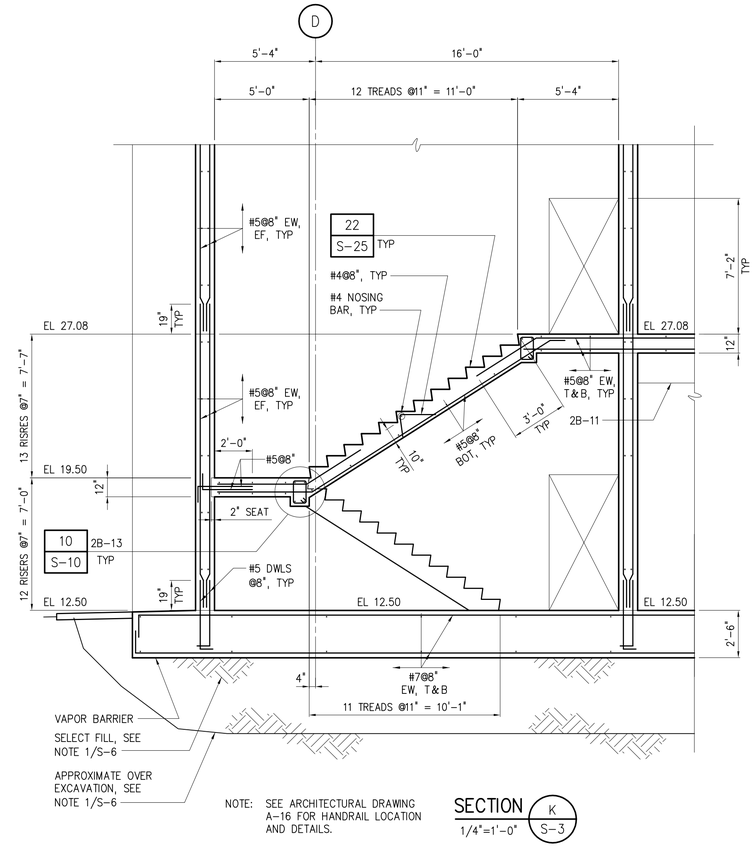

NOTE: SEE ARCHITECTURAL DRAWING A-16 FOR HANDRAIL LOCATION AND DETAILS.

SECTION K S-3
1/4"=1'-0"

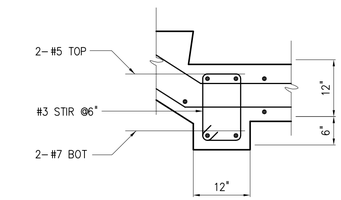

DETAIL 10 S-10
3/4"=1'-0"

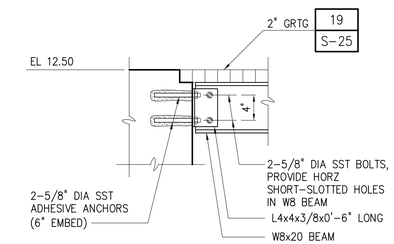

DETAIL 13 S-10
1"=1'-0"

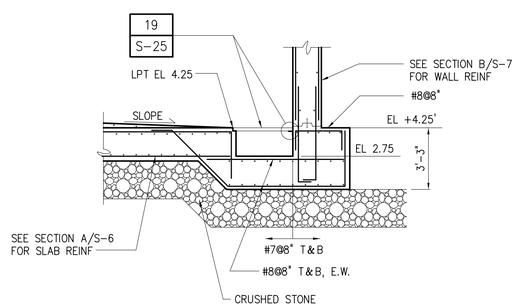

SECTION P S-2
1/4"=1'-0"

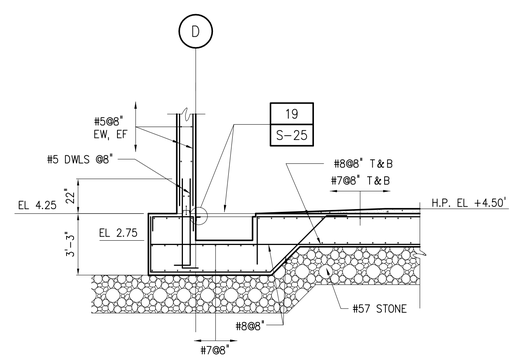

SECTION R S-2
1/4"=1'-0"

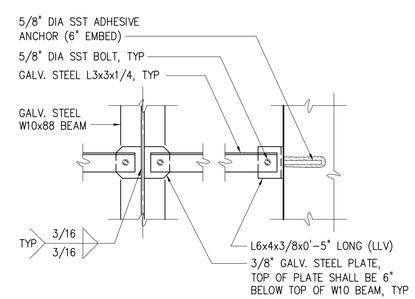

DETAIL 15 S-3
1"=1'-0"

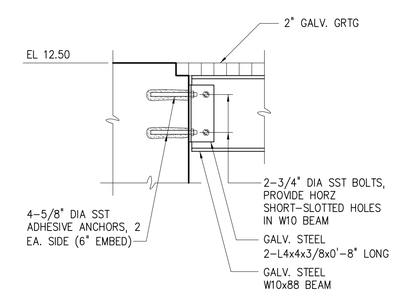

DETAIL 14 S-7
1"=1'-0"

NO.	DATE	ISSUED FOR	BY
4	01/08	RECORD DRAWING	P.A.D.
3	10/21/05	TRENCH MODIFICATION	S.J.
2	10/03	BID SET	S.J.
1	10/03	BLDG. DEPT. REVISIONS	S.J.

DESIGNED W.G.L.
DRAWN W.G.L.
CHECKED S.J.
PROJ. ENGR. P.A.D.

SHAJAN JOYKUTTY P.E.
No. 43323

HAZEN AND SAWYER
Environmental Engineers & Scientists
4000 Hollywood Boulevard, Suite 750N
Hollywood, Florida 33021
Certificate of Authorization Number: 2771

SCALE: AS NOTED

CONTRACT: –
CLIENTS PROJECT:
ENGINEERS PROJECT: 40406
CAD REFERENCE: 40406S10

CITY OF HALLANDALE BEACH
UTILITIES DEPARTMENT

6 MGD MEMBRANE SOFTENING W.T.P.

NF PROCESS BUILDING
SECTIONS AND DETAILS
SHEET 2

DATE: JANUARY 2008
SHEET: 73 OF 162
DRAWING: S-10

RECORD DRAWING

PLOT DATE: 2/8/2008 5:00 PM BY: AMEDINA

XREFs= ..\200\PT-S08=S,..\200\PT-S09=S,..\200\PT-S10=S,..\200\PT-S05=S,..\200\PT-S12=S,..\200\PT-S13=S,..\200\PT-S14=S,..\200\PT-DD=S

File = O:\40406\40406-001\Drawings\STRU\40406S10 Saved by LSORIANO Save date = 1/30/2008 3:31 PM

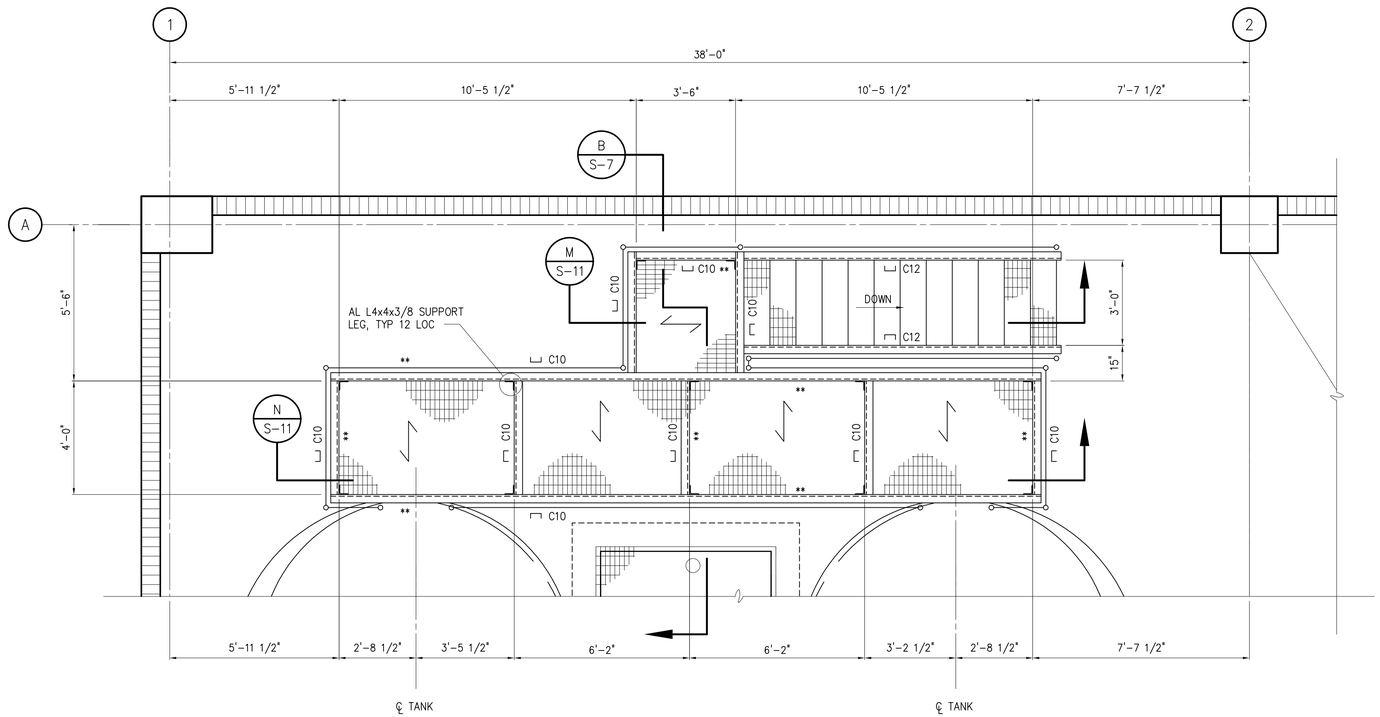

NOTES: 1 C10 INDICATES AL C10x6.136

2 ** INDICATES CROSS-BRACING TO BE PROVIDED BETWEEN L4x4x3/8 SUPPORT LEGS AS SHOWN IN SECTIONS M/S-11 AND SECTIONS N/S-11.

ALUMINUM PLATFORM

DETAIL 4 / S-3
3/8"=1'-0"

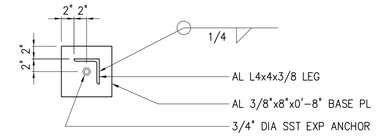

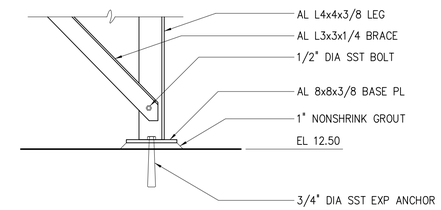

DETAIL 5 / S-11
1"=1'-0"

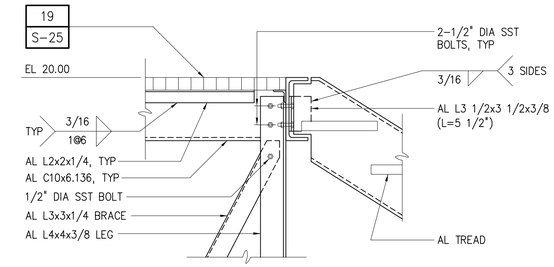

DETAIL 6 / S-11
1"=1'-0"

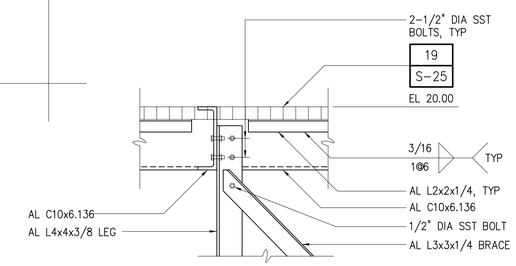

DETAIL 7 / S-11
1"=1'-0"

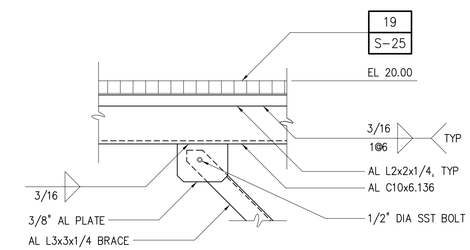

DETAIL 8 / S-11
1"=1'-0"

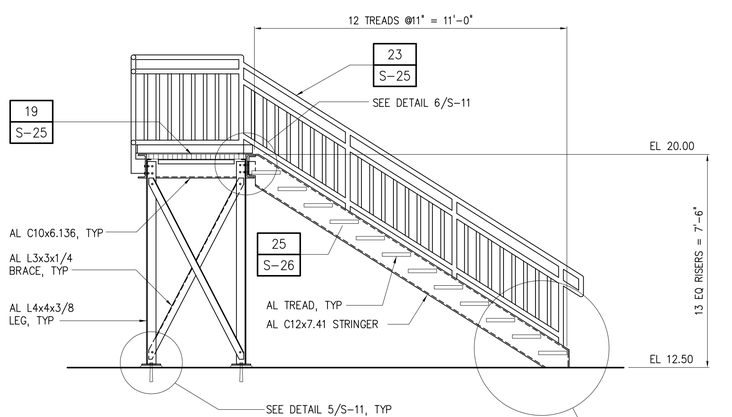

SECTION M / S-11
3/8"=1'-0"

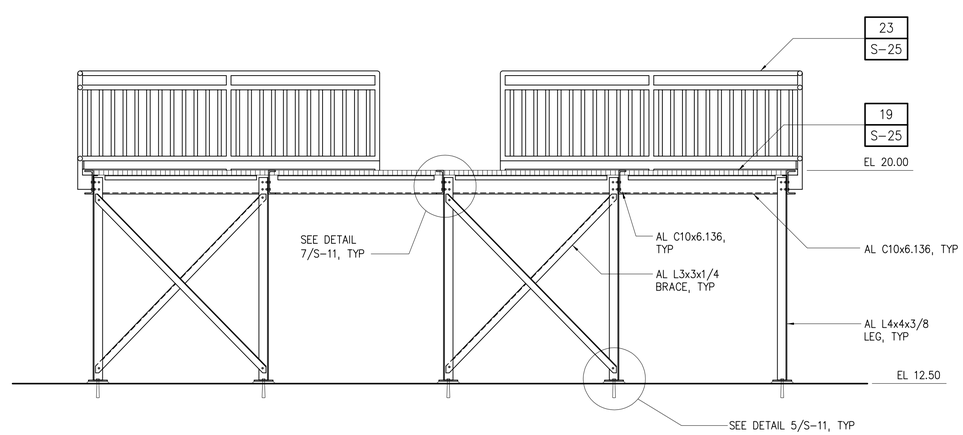

SECTION N / S-11
3/8"=1'-0"

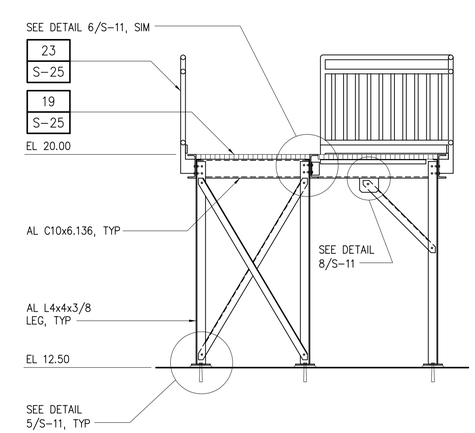

DETAIL 9 / S-7
3/8"=1'-0"

NO.	DATE	ISSUED FOR	BY
3	01/08	RECORD DRAWING	P.A.D.
2	10/03	BID SET	S.J.
1	10/03	BLDG. DEPT. REVISIONS	S.J.

DESIGNED W.G.L.
DRAWN W.G.L.
CHECKED S.J.
PROJ. ENGR. P.A.D.

SHAJAN JOYKUTTY P.E.
No. 43323

HAZEN AND SAWYER
Environmental Engineers & Scientists
4000 Hollywood Boulevard, Suite 750N
Hollywood, Florida 33021
Certificate of Authorization Number: 2771

SCALE: AS NOTED

CONTRACT: –
CLIENTS PROJECT:
ENGINEERS PROJECT: 40406
CAD REFERENCE: 40406S11

CITY OF HALLANDALE BEACH
UTILITIES DEPARTMENT

6 MGD MEMBRANE SOFTENING W.T.P.

NF PROCESS BUILDING
SECTIONS AND DETAILS
SHEET 3

DATE: JANUARY 2008
SHEET: 74 OF 162
DRAWING: S-11

RECORD DRAWING

PLOT DATE: 2/8/2008 5:00 PM BY: AMEDINA

XREFs= ..\200\PT-P1-SB,..\200\PT-P1-WALL,..\200\PT-S11-S,..\200\PT-S02-S

File = O:\40406\40406-001\Drawings\STRU\40406S11 Saved by GDIAZ Save date = 1/30/2008 3:38 PM

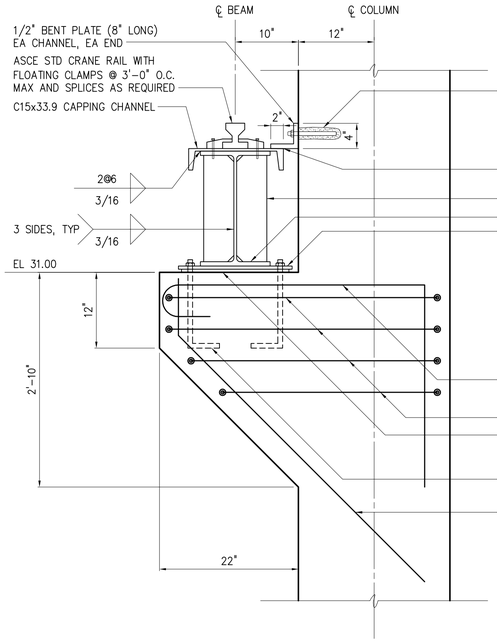

NOTE: COLUMN REINFORCEMENT NOT SHOWN FOR CLARITY

SIDE VIEW

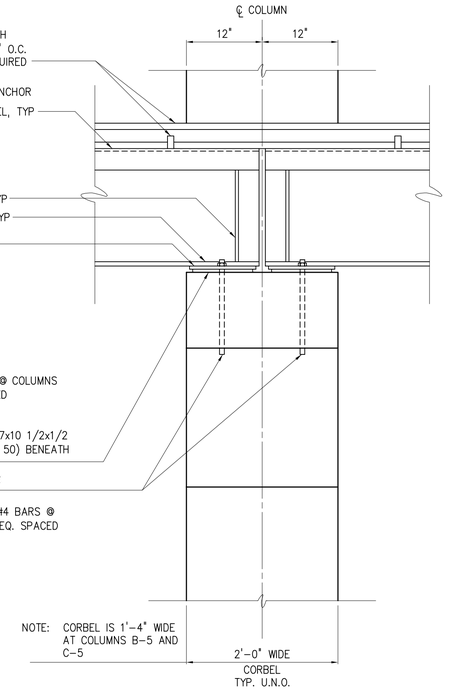

FRONT VIEW

DETAIL 24
1/2"=1'-0" S-6

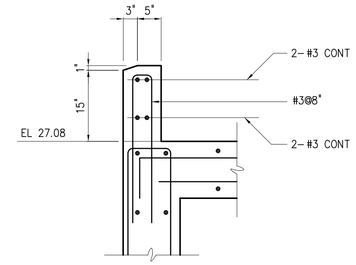

DETAIL 27
3/4"=1'-0" S-9

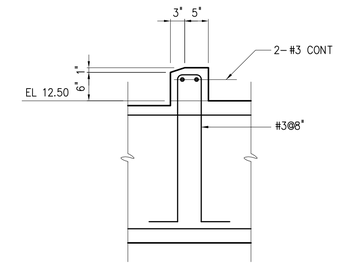

DETAIL 28
3/4"=1'-0" S-9

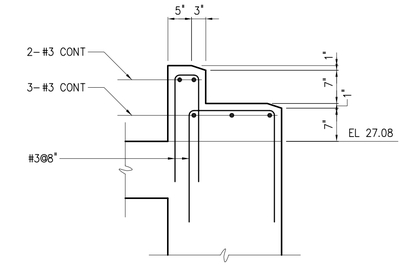

NOTE: BEAM AND SLAB REINFORCEMENT NOTE SHOWN.

DETAIL 29
3/4"=1'-0" S-9

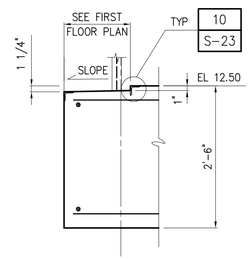

DETAIL 30
3/4"=1'-0" S-10

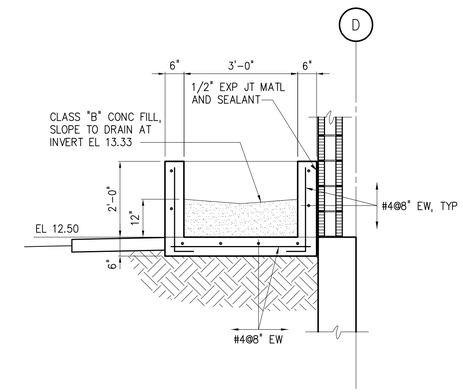

SECTION U
1/2"=1'-0" S-3

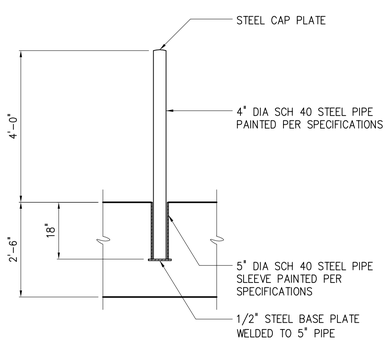

DETAIL 34
1/2"=1'-0" S-3

NO.	DATE	ISSUED FOR	BY
4	01/08	RECORD DRAWING	P.A.D.
3	10/21/05	TRENCH MODIFICATION	S.J.
2	10/03	BID SET	S.J.
1	10/03	BLDG. DEPT. REVISIONS	S.J.

DESIGNED W.G.L.
DRAWN W.G.L.
CHECKED S.J.
PROJ. ENGR. P.A.D.

SHAJAN JOYKUTTY P.E.
No. 43323

HAZEN AND SAWYER
Environmental Engineers & Scientists
4000 Hollywood Boulevard, Suite 750N
Hollywood, Florida 33021
Certificate of Authorization Number: 2771

SCALE
AS NOTED

CONTRACT: –
CLIENTS PROJECT:
ENGINEERS PROJECT: 40406
CAD REFERENCE: 40406S12

CITY OF HALLANDALE BEACH
UTILITIES DEPARTMENT

6 MGD MEMBRANE SOFTENING W.T.P.

NF PROCESS BUILDING
SECTIONS AND DETAILS
SHEET 4

DATE: JANUARY 2008
SHEET: 75 OF 162
DRAWING: S-12

RECORD DRAWING

PLOT DATE: 2/8/2008 5:00 PM BY: AMEDINA

XREFs= ..\200\PT-DJ-S,..\200\PT-S07-S,..\200\PT-S06-S,..\200\PT-S05-S,..\200\PT-S15-S,..\200\PT-DL-S

File = O:\40406\40406-001\Drawings\STRU\40406S12 Saved by NPENA Save date = 1/30/2008 3:40 PM

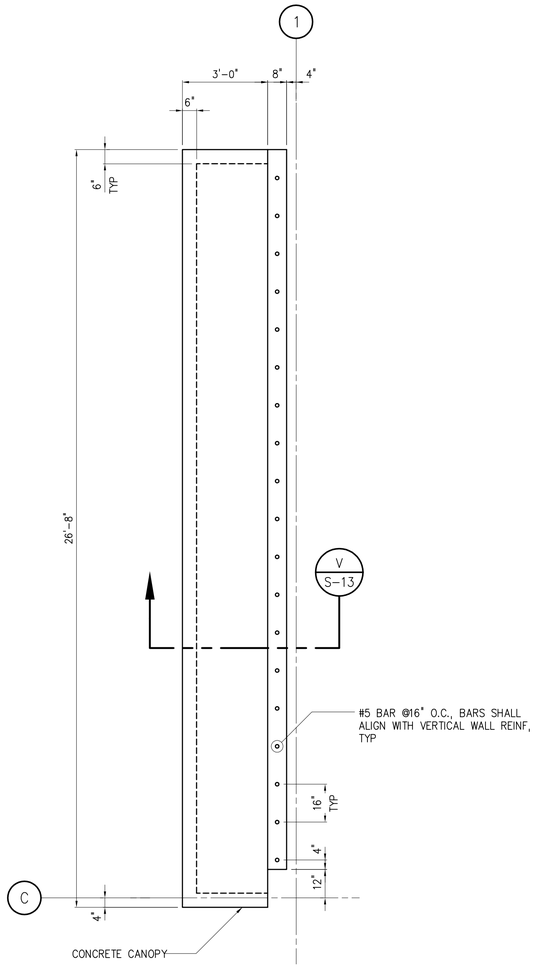

CONCRETE CANOPY "A" PLAN

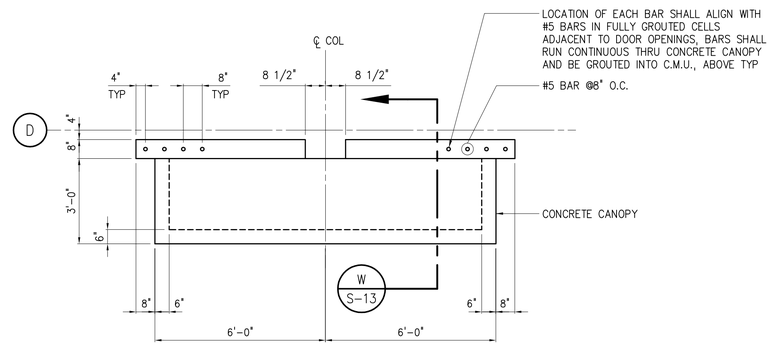

CONCRETE CANOPY "B" PLAN

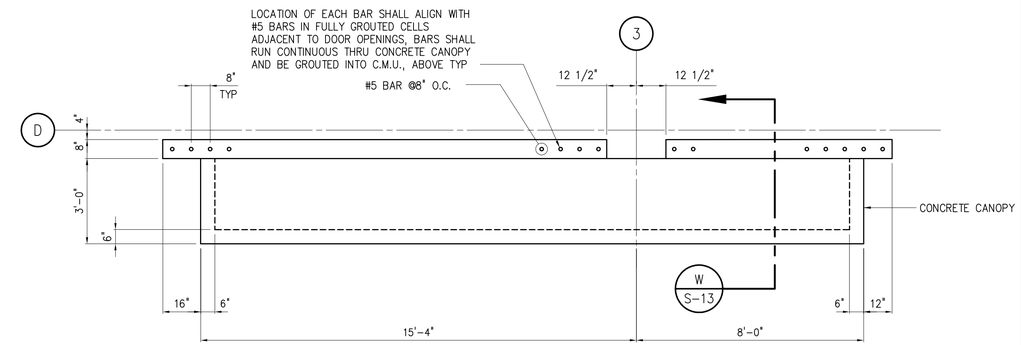

CONCRETE CANOPY "C" PLAN

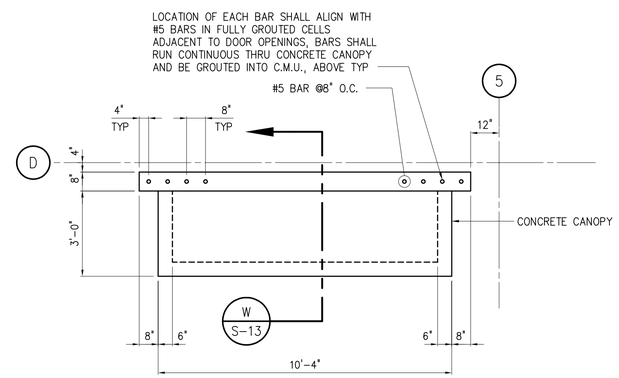

CONCRETE CANOPY "D" PLAN

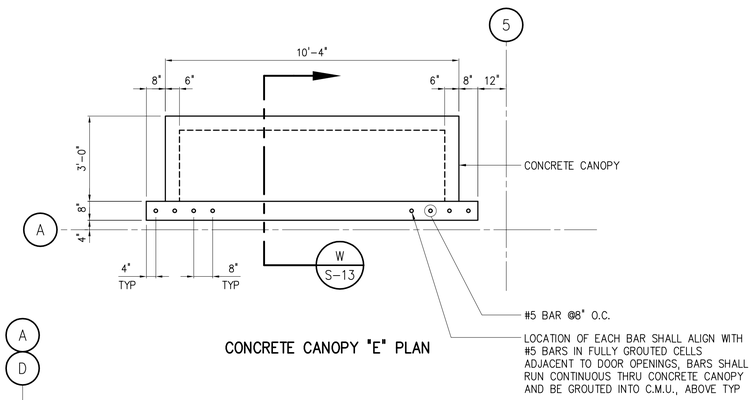

CONCRETE CANOPY "E" PLAN

CANOPIES DETAIL 33 / S-4
3/8"=1'-0"

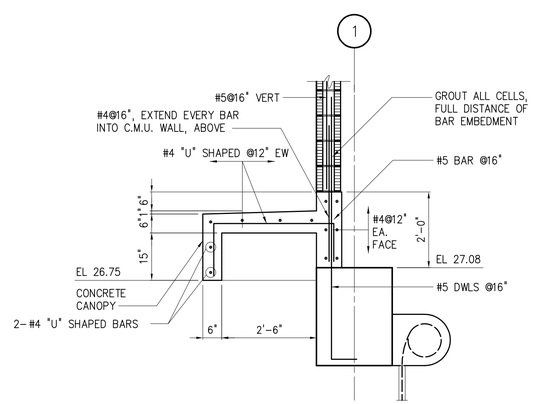

SECTION V S-13
1/2"=1'-0"

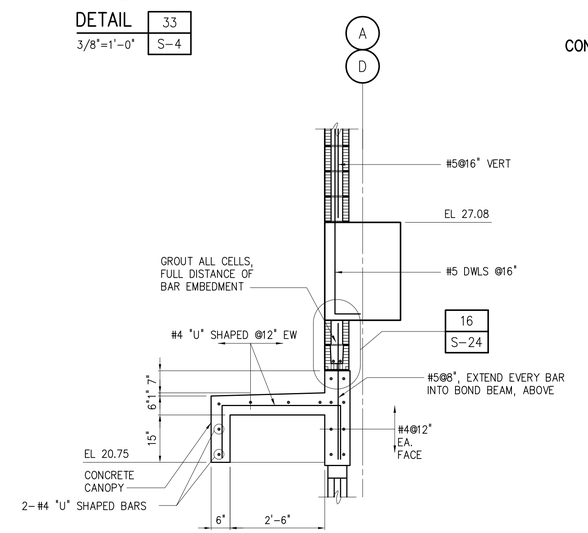

SECTION W S-13
1/2"=1'-0"

NO.	DATE	ISSUED FOR	BY
3	01/08	RECORD DRAWING	P.A.D.
2	10/03	BID SET	S.J.
1	10/03	BLDG. DEPT. REVISIONS	S.J.

DESIGNED W.G.L.
DRAWN W.G.L.
CHECKED S.J.
PROJ. ENGR. P.A.D.

SHAJAN JOYKUTTY P.E.
No. 43323

HAZEN AND SAWYER
Environmental Engineers & Scientists
4000 Hollywood Boulevard, Suite 750N
Hollywood, Florida 33021
Certificate of Authorization Number: 2771

SCALE: AS NOTED

CONTRACT: –
CLIENTS PROJECT:
ENGINEERS PROJECT: 40406
CAD REFERENCE: 40406S13

CITY OF HALLANDALE BEACH
UTILITIES DEPARTMENT

6 MGD MEMBRANE SOFTENING W.T.P.

NF PROCESS BUILDING
SECTIONS AND DETAILS
SHEET 5

DATE: JANUARY 2008
SHEET: 76 OF 162
DRAWING: S-13

RECORD DRAWING

PLOT DATE: 2/6/2008 5:00 PM BY: AMEDINA

XREFs= ..\200\PT-DK-S,..\200\PT-S01-S,..\200\PT-S02-S

File = O:\40406\40406-001\Drawings\STRU\40406S13 Saved by GDIAZ Save date = 1/30/2008 3:41 PM

COLUMN SCHEDULE

LOCATION	DESIGNATION / ELEVATION		A-2, A-3, A-4 B-2, B-3, B-4, B-5, B-6 C-3, C-4, C-6 D-3, D-4	A-1, B-1	C-1, D-1	C-2, D-2	C-5	D-5	A-5	A-6	A-7	B-7	C-7	D-7
ROOF	EL VARIES													
2ND FLOOR	EL 27.08	SIZE: BxD VERT BARS TIES TYPE	24" x 24" 12-#9 3-#3@12" I	30" x 24" 14-#9 3-#3@12" IA	30" x 24" 14-#9 3-#3@12" IA	24" x 24" 12-#9 3-#3@12" I	24" x 24" 12-#9 3-#3@12" I	24" x 24" 12-#9 3-#3@12" VI	24" x 24" 12-#9 3-#3@12" I	24" x 24" 12-#9 3-#3@12" I	44" x 44" 24-#9 3-#3@12" X	44" x 36" 22-#9 3-#3@12" XI	44" x 24" 18-#9 3-#3@12" XII	44" x 36" 22-#9 3-#3@12" XIII
1ST FLOOR	EL 12.50	SIZE: BxD VERT BARS TIES TYPE	24" x 24" 12-#9 3-#3@12" I	30" x 24" 14-#9 3-#3@12" IA	30" x 24" 14-#9 3-#3@12" IA	24" x 24" 12-#9 3-#3@12" I	24" x 24" 12-#9 3-#3@12" I	24" x 24" 12-#9 3-#3@12" VI	24" x 24" 12-#9 3-#3@12" VII	24" x 24" 12-#9 3-#3@12" VIII	44" x 44" 24-#9 3-#3@12" IX	44" x 36" 22-#9 3-#3@12" XI	44" x 24" 18-#9 3-#3@12" XII	44" x 36" 22-#9 3-#3@12" XIII
CHEMICAL ROOMS	EL 7.83	SIZE: BxD VERT BARS TIES TYPE			30" x 24" 14-#9 3-#3@12" II	24" x 24" 12-#9 3-#3@12" III	24" x 24" 12-#9 3-#3@12" IV	24" x 24" 12-#9 3-#3@12" V						
PROCESS AREA	EL 4.25	SIZE: BxD VERT BARS TIES TYPE												
DOWELS			12-#9	14-#9	14-#9	12-#9	12-#9	12-#9	12-#9	12-#9	24-#9	22-#9	18-#9	22-#9

NOTES: 1 SEE DETAIL 12/S-14 FOR COLUMN TYPES.
2 SEE DETAIL 18/S-25 FOR COLUMN ELEVATION.

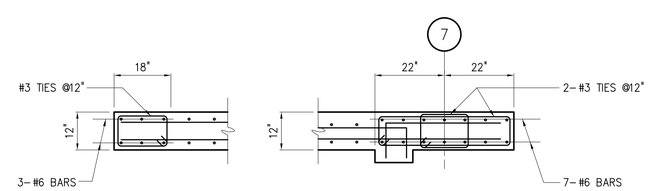

DETAIL 19 — 1/2"=1'-0" S-2

DETAIL 20 — 1/2"=1'-0" S-3

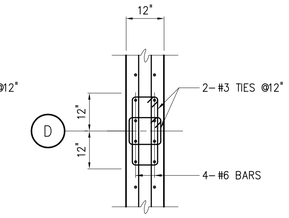

DETAIL 21 — 1/2"=1'-0" S-2

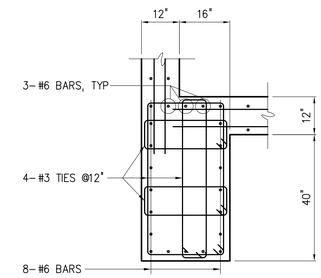

DETAIL 22 — 1/2"=1'-0" S-3

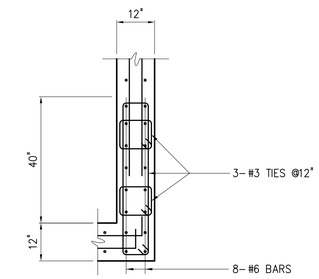

DETAIL 23 — 1/2"=1'-0" S-3

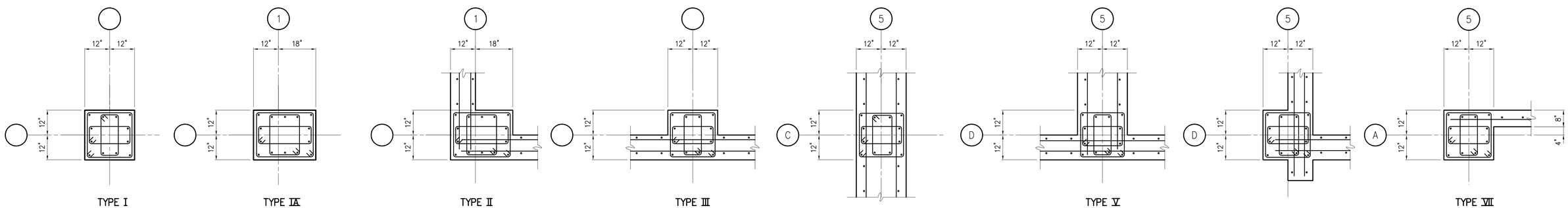

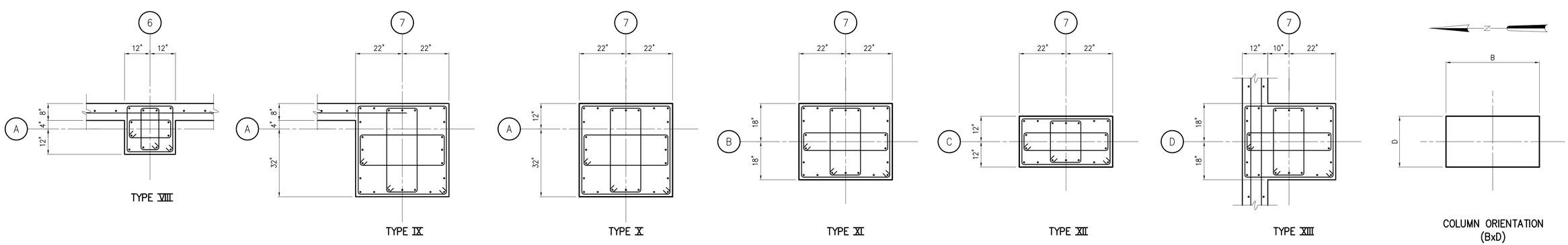

COLUMN TYPES

DETAIL 12 — 1/2"=1'-0" S-14

NO.	DATE	ISSUED FOR	BY
3	01/08	RECORD DRAWING	P.A.D.
2	10/03	BID SET	S.J.
1	10/03	BLDG. DEPT. REVISIONS	S.J.

DESIGNED W.G.L.
DRAWN W.G.L.
CHECKED S.J.
PROJ. ENGR. P.A.D.

SHAJAN JOYKUTTY P.E.
No. 43323

HAZEN AND SAWYER
Environmental Engineers & Scientists
4000 Hollywood Boulevard, Suite 750N
Hollywood, Florida 33021
Certificate of Authorization Number: 2771

SCALE: AS NOTED

CONTRACT: –
CLIENTS PROJECT:
ENGINEERS PROJECT: 40406
CAD REFERENCE: 40406S14

CITY OF HALLANDALE BEACH
UTILITIES DEPARTMENT

6 MGD MEMBRANE SOFTENING W.T.P.

NF PROCESS BUILDING

COLUMN SCHEDULE AND DETAILS

DATE: JANUARY 2008
SHEET: 77 OF 162
DRAWING: S-14

RECORD DRAWING

PLOT DATE: 2/8/2008 5:10 PM BY: AMENNA

XREFs= ..\200\PT-PB-SB,..\200\PT-P1-SB,..\200\PT-P2-SB

File = O:\40406\40406-001\Drawings\STRU\40406S14 Saved by NPENA Save date = 1/30/2008 3:42 PM

BEAM SCHEDULE

MARK	SPAN TYPE	SIZE W	SIZE D	TOP ELEV	No REQD	MAIN REINF TOP	MAIN REINF BOT	ADD REINF A	ADD REINF B	ADD REINF C	STIRRUPS	L~S	REMARKS
2B-1	END	24	31	27.08	6	3-#9	3-#9				#3@12"		1-#7 ADDL EA FACE
2B-2	INT	24	31	27.08	7	3-#9	3-#9				#3@12"		1-#7 ADDL EA FACE
2B-3	END	24	31	27.08	6	4-#9	4-#9				#3@12"		
2B-4	INT	24	31	27.08	1	4-#9	4-#9	1-#9			#3@12"		
2B-5A	END	24	64	27.08	1	5-#9	5-#9				#4@12"		3-#7 ADDL EA FACE
2B-5B	END	44	64	27.08	1	9-#9	9-#9				2-#4@12"		3-#7 ADDL EA FACE, SEE NOTE 2
2B-6	INT	24	64	27.08	1	5-#9	5-#9				#4@12"		3-#7 ADDL EA FACE, SEE NOTE 2
2B-7	END	24	31	27.08	2	5-#9	5-#9				11-#3 EE, REM #3@12"	5'-2"	
2B-8	INT	24	31	27.08	1	5-#9	5-#9	3-#9			11-#3 EE, REM #3@12"	5'-2"	
2B-9	END	24	31	27.08	4	4-#9	4-#9				#3@12"		
2B-10	SIMP	24	31	27.08	1	3-#9	4-#9				#3@12"		
2B-11	SIMP	18	31	27.08	2	3-#7	3-#9				#3@12"		
2B-12	SIMP	12	52	27.08	1	2-#5	3-#7				#4@12"		3-#5 ADDL EA FACE
2B-13	SIMP	12	18	27.08/19.50	2	2-#5	2-#7				#3@6"		SEE DETAIL 10/S-10
2B-13A	SIMP	12	18	27.0/19.42	2	2-#5	2-#7				#3@6"		SEE DETAIL 10/S-10
2B-14	END	12	31	27.08	2	3-#6	3-#6				#3@12"		2-#6 ADDL EA FACE
2B-15	INT	12	31	27.08	1	3-#6	3-#6				#3@12"		2-#6 ADDL EA FACE
2B-16	SIMP	16	31	27.08	1	4-#6	4-#6				#3@12"		2-#6 ADDL EA FACE
2B-17	SIMP	12	31	27.08	1	3-#6	3-#6				#3@12"		2-#6 ADDL EA FACE
RB-1	END	24	38	42.25	2	5-#9	5-#9				#3@12"		
RB-2	INT	24	38	42.25	4	5-#9	5-#9				#3@12"		
RB-3	END	24	VAR	VARIES	12	3-#9	3-#9				#3@12"		BOTTOM EL 39.08
RB-4	INT	24	VAR	VARIES	6	3-#9	3-#9				#3@12"		BOTTOM EL 39.08
RB-5	END	44	VAR	VARIES	2	9-#9	9-#9				#4@12"		BOTTOM EL 37.75, 3-#7 ADDL EA FACE
RB-6	INT	44	VAR	VARIES	2	9-#9	9-#9				#4@12"		BOTTOM EL 37.75, 3-#7 ADDL EA FACE
RB-7	END	24	46	42.92	1	4-#9	4-#9	2-#9		2-#9	#4@12"		
RB-8	INT	24	46	42.92	3	4-#9	4-#9				#4@12"		
RB-9	INT	24	46	42.92	1	4-#9	4-#9				#4@12"		
RB-10	END	24	46	42.92	1	4-#9	4-#9				#4@12"		
RB-11	END	24	37	42.17	1	4-#9	4-#9	3-#9		3-#9	#3@12"		
RB-12	INT	24	37	42.17	3	4-#9	4-#9				#3@12"		
RB-13	INT	24	37	42.17	1	4-#9	4-#9	3-#9			#3@12"		
RB-14	END	24	37	42.17	1	4-#9	4-#9				#3@12"		
RB-15	END	24	30	41.58	2	5-#9	5-#9				#3@12"		
RB-16	INT	24	30	41.58	4	5-#9			5-#9		#3@12"		
RB-16A	INT	24	28	41.58	1	5-#9			5-#9		#3@12"		RB-16A IS 24"x28"
RB-17	SIMP	48	46	41.58	1	7-#9	7-#9				#4@12"		2-#7 ADDL EA FACE
RB-18	SIMP	16	VAR	VARIES	1	4-#6	4-#6				#3@12"		BOTTOM EL 39.08, 2-#6 ADDL EA FACE
RB-19	SIMP	12	VAR	VARIES	1	3-#6	3-#6				#3@12"		BOTTOM EL 39.08, 2-#6 ADDL EA FACE

NOTES: 1 SEE DETAIL 35/S-15 FOR TYPICAL BEAM ELEVATIONS.

2 SEE DETAIL 31/S-15 FOR REINFORCEMENT IN 2B-5B AND 44" WIDE PORTION OF 2B-6. SEE DETAIL 32/S-15 FOR PLAN VIEW OF REINFORCEMENT WHERE BEAM WIDTH CHANGES FROM 24" TO 44".

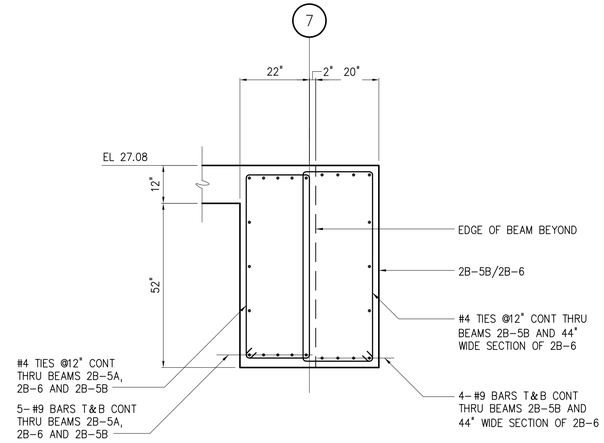

NOTE: SLAB REINFORCEMENT NOT SHOWN FOR CLARITY.

DETAIL 31 / S-6
1/2"=1'-0"

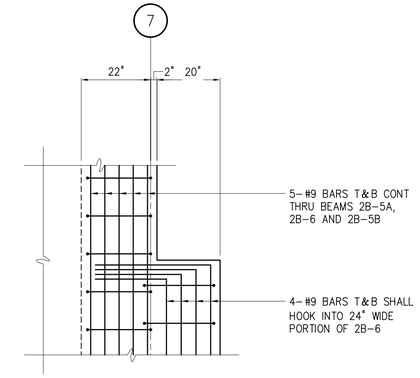

NOTE: SLAB REINFORCEMENT NOT SHOWN FOR CLARITY.

DETAIL 32 / S-15
1/2"=1'-0"

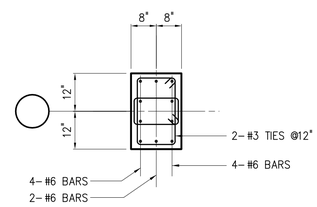

NOTE: COLUMN REINFORCEMENT SHALL EXTEND FORM EL 7.83 TO ROOF. PROVIDE 10-#6 DOWELS.

DETAIL 36 / S-2
1/2"=1'-0"

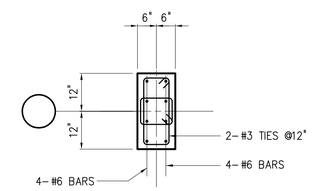

NOTE: COLUMN REINFORCEMENT SHALL EXTEND FORM EL 7.83 TO ROOF. PROVIDE 8-#6 DOWELS.

DETAIL 37 / S-2
1/2"=1'-0"

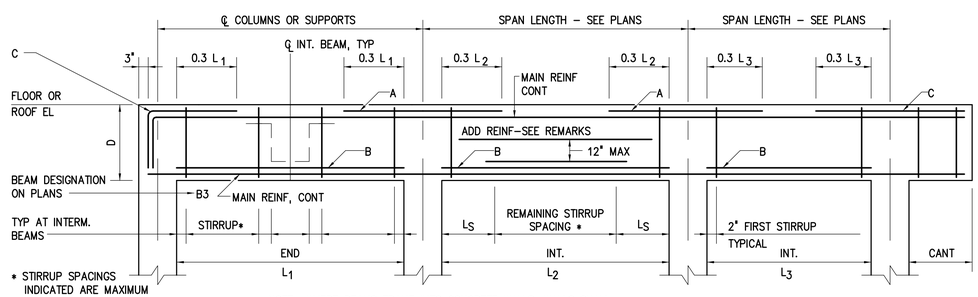

NOTE: WHERE BEAMS FRAME INTO CONCRETE WALLS, WALLS SHALL BE BLOCKED OUT FULL HEIGHT AND WIDTH OF BEAM TO PROVIDE A MINIMUM 8" SEAT FOR BEAM BEARING. WALL REINFORCEMENT SHALL NOT BE INTERRUPTED THROUGH BLOCKOUT.

TYPICAL BEAM ELEVATIONS

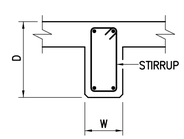

TYPICAL BEAM SECTION

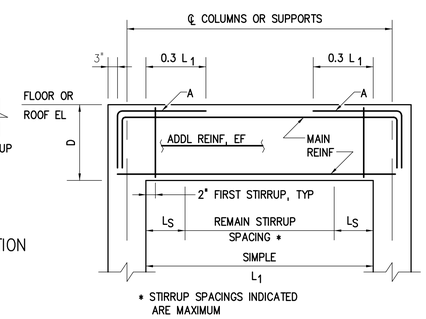

DETAIL 35 / S-15
N.T.S.

NO.	DATE	ISSUED FOR	BY
4	01/08	RECORD DRAWING	P.A.D.
3	10/05	TRENCH MODIFICATIONS	S.J.
2	10/03	BID SET	S.J.
1	10/03	BLDG. DEPT. REVISIONS	S.J.

DESIGNED W.G.L.
DRAWN W.G.L.
CHECKED S.J.
PROJ. ENGR. P.A.D.

SHAJAN JOYKUTTY P.E.
No. 43323

HAZEN AND SAWYER
Environmental Engineers & Scientists
4000 Hollywood Boulevard, Suite 750N
Hollywood, Florida 33021
Certificate of Authorization Number: 2771

SCALE: AS NOTED

CONTRACT: –
CLIENTS PROJECT:
ENGINEERS PROJECT: 40406
CAD REFERENCE: 40406S15

CITY OF HALLANDALE BEACH
UTILITIES DEPARTMENT

6 MGD MEMBRANE SOFTENING W.T.P.

NF PROCESS BUILDING

BEAM SCHEDULE AND DETAILS

DATE: JANUARY 2008
SHEET: 78 OF 162
DRAWING: S-15

RECORD DRAWING

PLOT DATE: 2/8/2008 5:00 PM BY: AMEDINA

XREFs= ..\200\PT-S01-S,..\200\PT-P2-SB,..\SDETAILS\0331801,..\200\PT-P1-SB

File = O:\40406\40406-001\Drawings\STRU\40406S15 Saved by NPENA Save date = 1/30/2008 4:02 PM

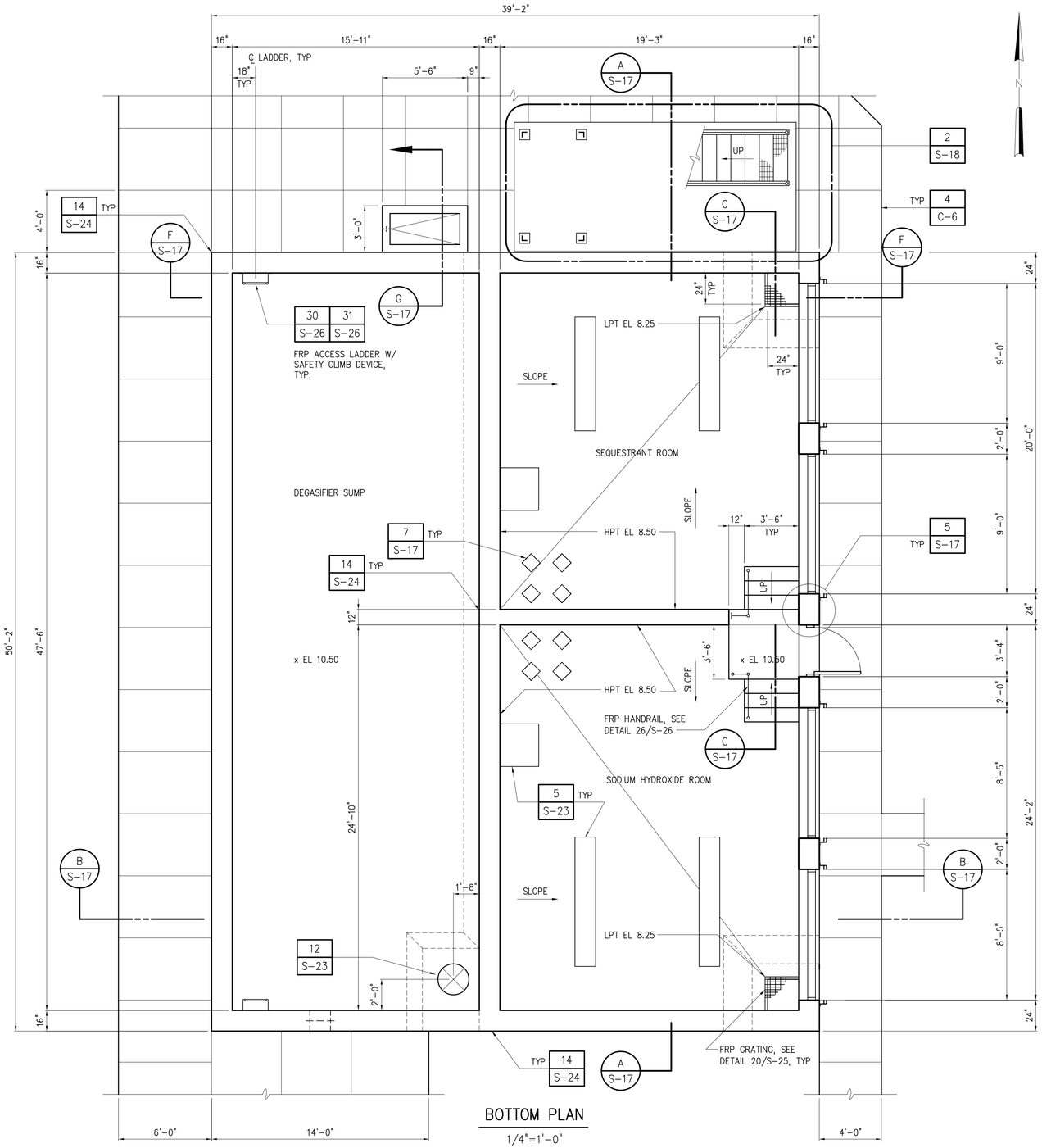

BOTTOM PLAN

1/4"=1'-0"

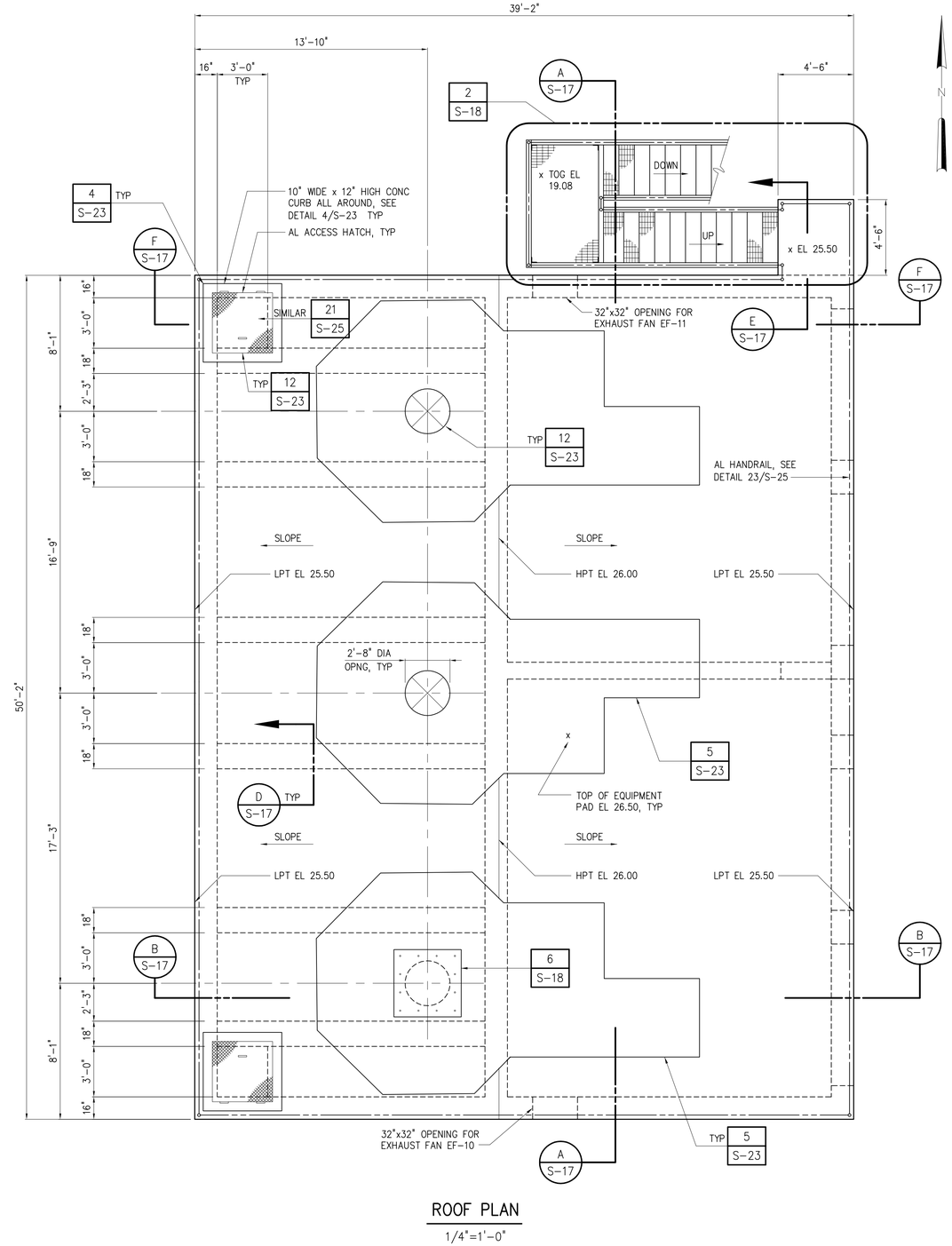

ROOF PLAN

1/4"=1'-0"

NO.	DATE	ISSUED FOR	BY
3	01/08	RECORD DRAWING	P.A.D.
2	10/03	BID SET	S.J.
1	10/03	BLDG. DEPT. REVISIONS	S.J.

DESIGNED W.G.L.
DRAWN W.G.L.
CHECKED S.J.
PROJ. ENGR. P.A.D.

SHAJAN JOYKUTTY P.E.
No. 43323

HAZEN AND SAWYER
Environmental Engineers & Scientists
4000 Hollywood Boulevard, Suite 750N
Hollywood, Florida 33021
Certificate of Authorization Number: 2771

SCALE 1/4"=1'-0"

CONTRACT: –
CLIENTS PROJECT:
ENGINEERS PROJECT: 40406
CAD REFERENCE: 40406S16

CITY OF HALLANDALE BEACH
UTILITIES DEPARTMENT

6 MGD MEMBRANE SOFTENING W.T.P.

DEGASIFIER STRUCTURE

BOTTOM AND ROOF PLANS

DATE: JANUARY 2008
SHEET: 79 OF 162
DRAWING: S-16

RECORD DRAWING

PLOT DATE: 2/8/2008 5:01 PM BY: AMEDINA

XREFs= ..\TBLOCK\40406-TB,..\100\DB-P1-SB,..\100\DB-PR-SB

File = O:\40406\40406-001\Drawings\STRU\40406S16 Saved by GDIAZ Save date = 1/30/2008 3:44 PM

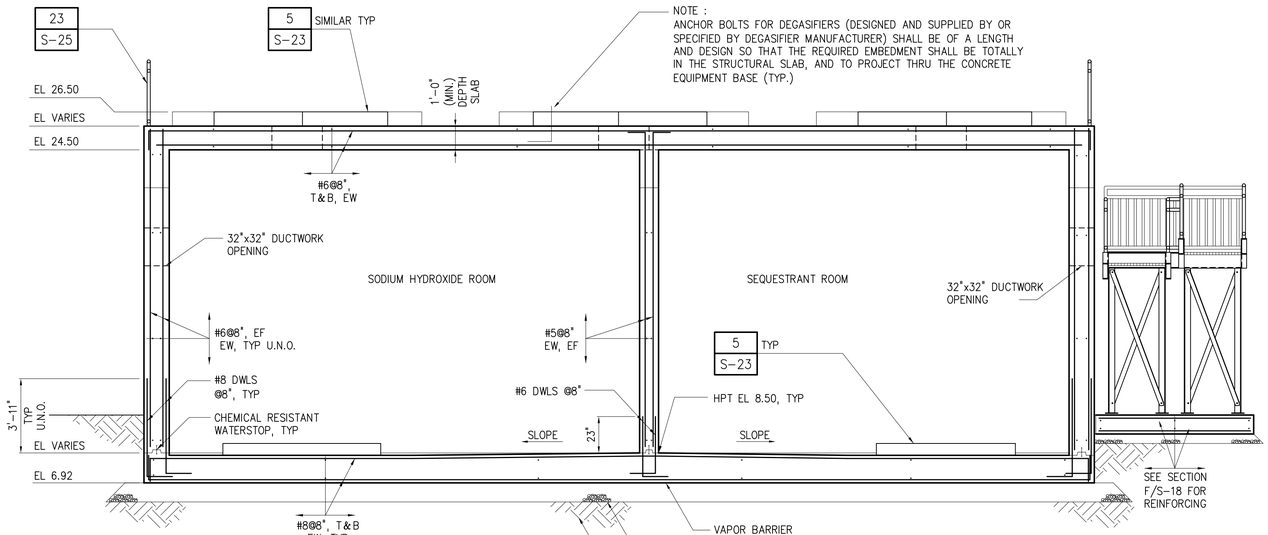

SECTION A S-16
1/4"=1'-0"

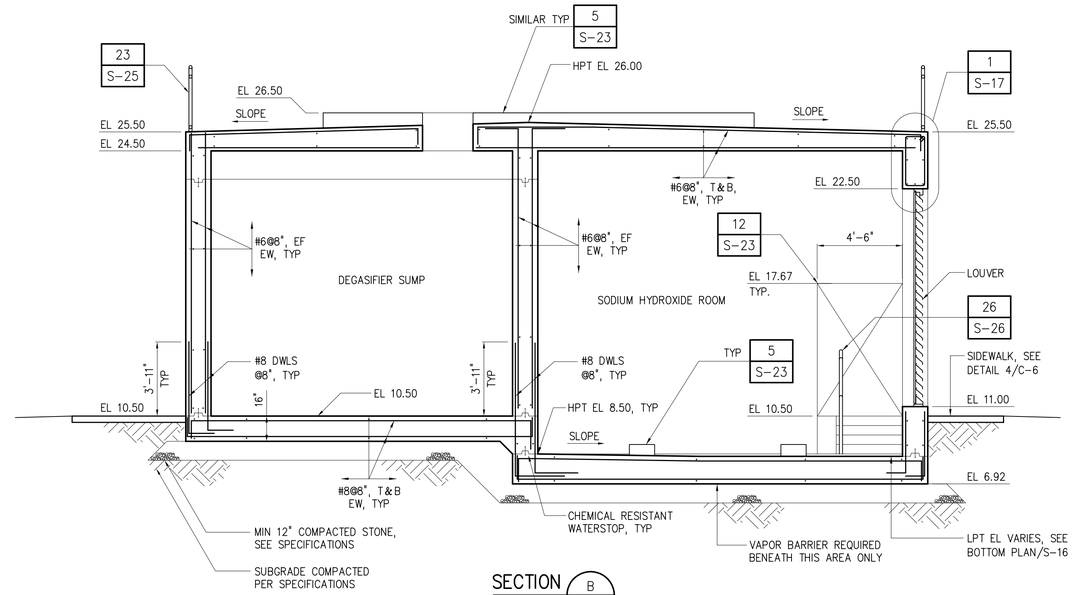

SECTION B S-16
1/4"=1'-0"

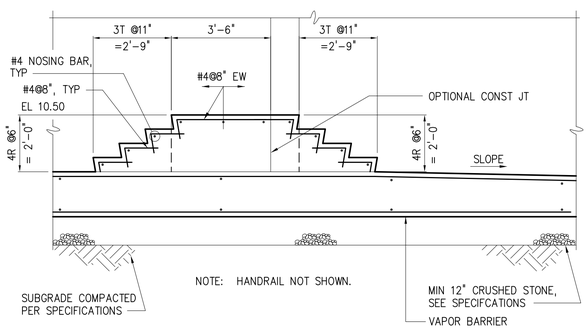

SECTION C S-16
3/8"=1'-0"

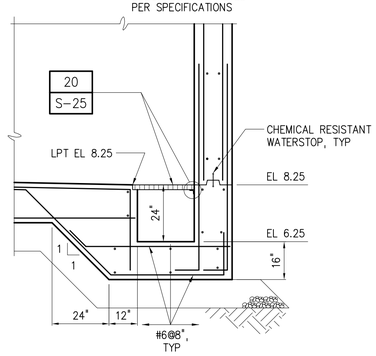

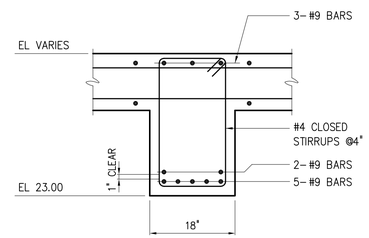

SECTION D S-16
3/4"=1'-0"

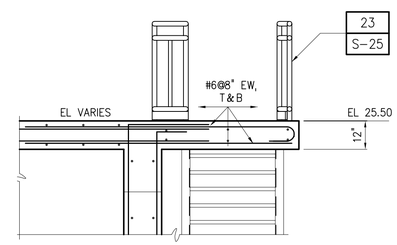

SECTION E S-16
3/8"=1'-0"

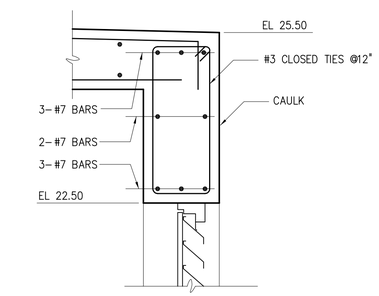

DETAIL 1 S-17
3/4"=1'-0"

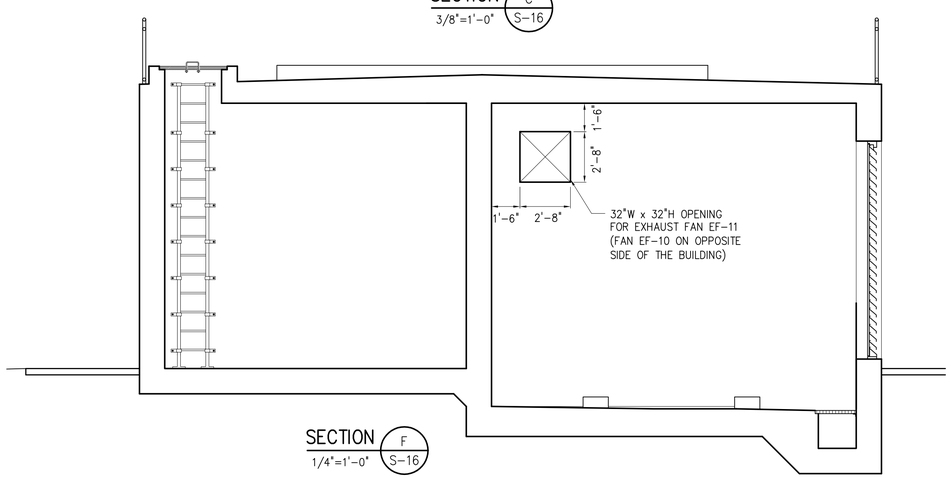

SECTION F S-16
1/4"=1'-0"

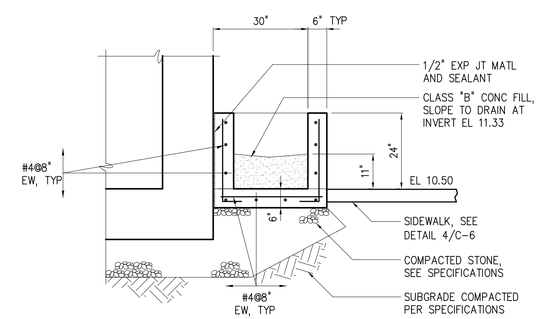

SECTION G S-16
1/2"=1'-0"

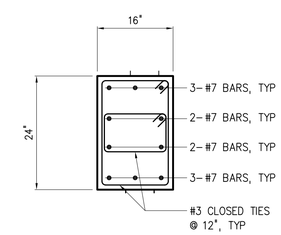

DETAIL 5 S-16
3/4"=1'-0"

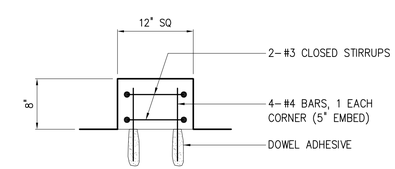

DETAIL 7 S-16
1"=1'-0"

NO.	DATE	ISSUED FOR	BY
3	01/08	RECORD DRAWING	P.A.D.
2	10/03	BID SET	S.J.
1	10/03	BLDG. DEPT. REVISIONS	S.J.

DESIGNED W.G.L.
DRAWN W.G.L.
CHECKED S.J.
PROJ. ENGR. P.A.D.

SHAJAN JOYKUTTY P.E.
No. 43323

HAZEN AND SAWYER
Environmental Engineers & Scientists
4000 Hollywood Boulevard, Suite 750N
Hollywood, Florida 33021
Certificate of Authorization Number: 2771

SCALE: AS NOTED

CONTRACT: –
CLIENTS PROJECT:
ENGINEERS PROJECT: 40406
CAD REFERENCE: 40406S17

CITY OF HALLANDALE BEACH
UTILITIES DEPARTMENT

6 MGD MEMBRANE SOFTENING W.T.P.

DEGASIFIER STRUCTURE SECTIONS AND DETAILS SHEET 1

DATE: JANUARY 2008
SHEET: 80 OF 162
DRAWING: S-17

RECORD DRAWING

PLOT DATE: 2/8/2008 5:01 PM BY: AMPONA

XREFs= ..\100\DB-S01-S,..\100\DB-S-DE,..\100\DB-S02-S,..\100\DB-S-DB,..\100\DB-S03-S,..\100\DB-P1-SB,..\100\DB-S-DG,..\100\DB-S-DD

File = O:\40406\40406-001\Drawings\STRU\40406S17 Saved by GDIAZ Save date = 1/30/2008 3:45 PM

NOTES:

1 CROSS-BRACING SHALL BE PROVIDED IN BOTH DIRECTIONS FOR ALL L4 COLUMN LEGS.

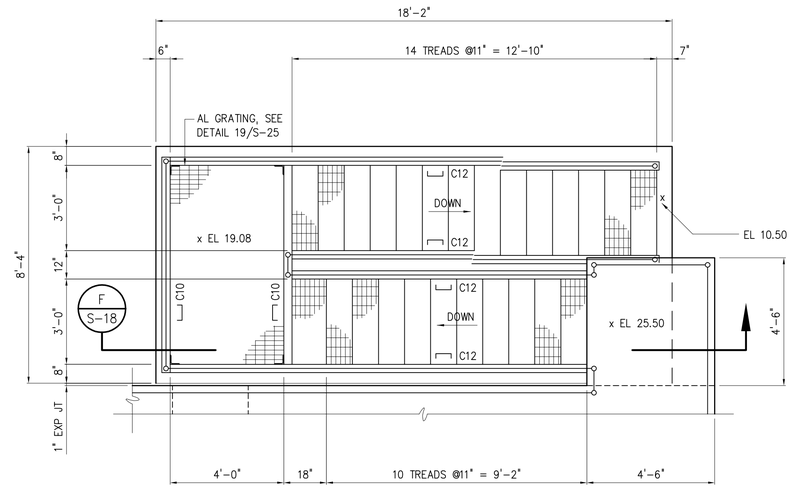

NOTE: C10 INDICATES AL C10x6.136
NOTE: C12 INDICATES AL C12x7.41

STAIR PLAN
DETAIL 2 / S-16
3/8"=1'-0"

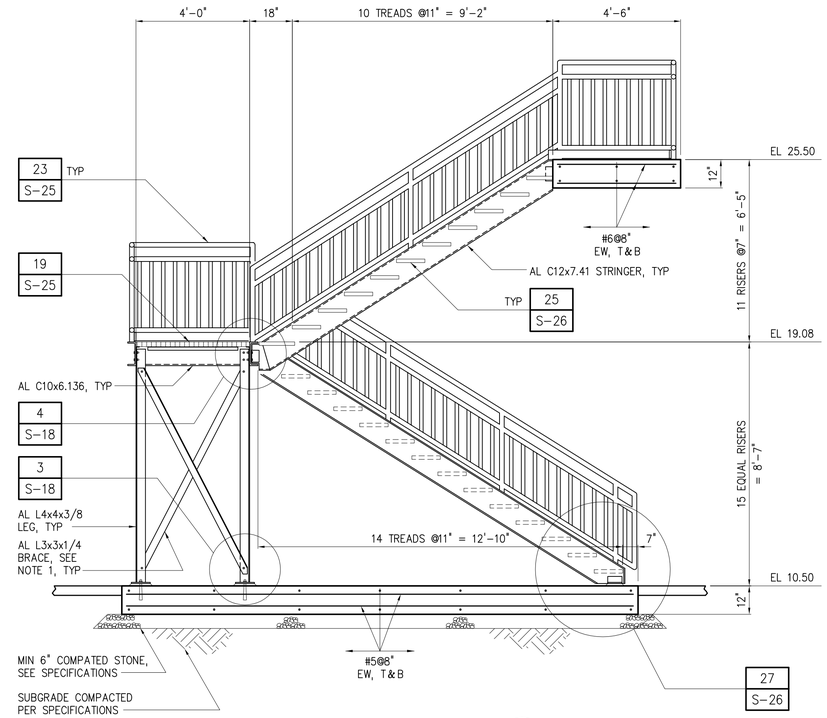

SECTION F / S-18
3/8"=1'-0"

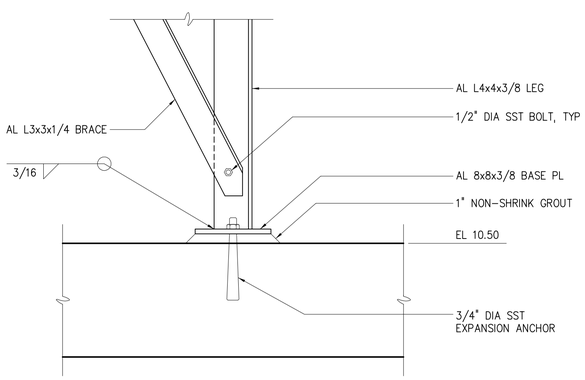

DETAIL 3 / S-18
1 1/2"=1'-0"

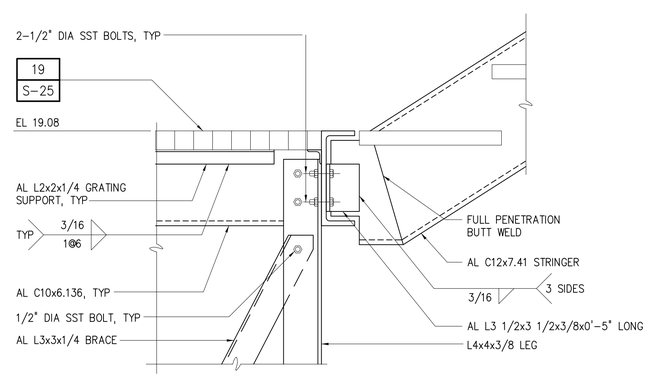

DETAIL 4 / S-18
1 1/2"=1'-0"

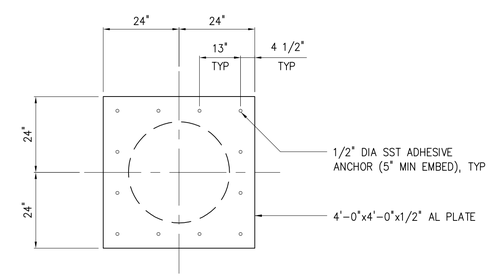

NOTE: PROVIDE 3"x1/8" CONTINUOUS NEOPRENE GASKET BETWEEN PLATE AND SLAB. GASKET SHALL BE ADHERED TO THE ALUMINUM PLATE.

DETAIL 6 / S-16
1/2"=1'-0"

NO.	DATE	ISSUED FOR	BY
3	01/08	RECORD DRAWING	P.A.D.
2	10/03	BID SET	S.J.
1	10/03	BLDG. DEPT. REVISIONS	S.J.

DESIGNED W.G.L.
DRAWN W.G.L.
CHECKED S.J.
PROJ. ENGR. P.A.D.

SHAJAN JOYKUTTY P.E.
No. 43323

HAZEN AND SAWYER
Environmental Engineers & Scientists
4000 Hollywood Boulevard, Suite 750N
Hollywood, Florida 33021
Certificate of Authorization Number: 2771

SCALE: AS NOTED

CONTRACT: –
CLIENTS PROJECT:
ENGINEERS PROJECT: 40406
CAD REFERENCE: 40406S18

CITY OF HALLANDALE BEACH
UTILITIES DEPARTMENT

6 MGD MEMBRANE SOFTENING W.T.P.

DEGASIFIER STRUCTURE SECTIONS AND DETAILS SHEET 2

DATE: JANUARY 2008
SHEET: 81 OF 162
DRAWING: S-18

RECORD DRAWING

PLOT DATE: 2/8/2008 5:01 PM BY: AMEDINA

XREFs= ..\100\DB-S-DF,..\100\DB-S-DD,..\100\DB-PR-SB,..\100\DB-P1-SB

File = O:\40406\40406-001\Drawings\STRU\40406S18 Saved by GDIAZ Save date = 1/30/2008 3:47 PM

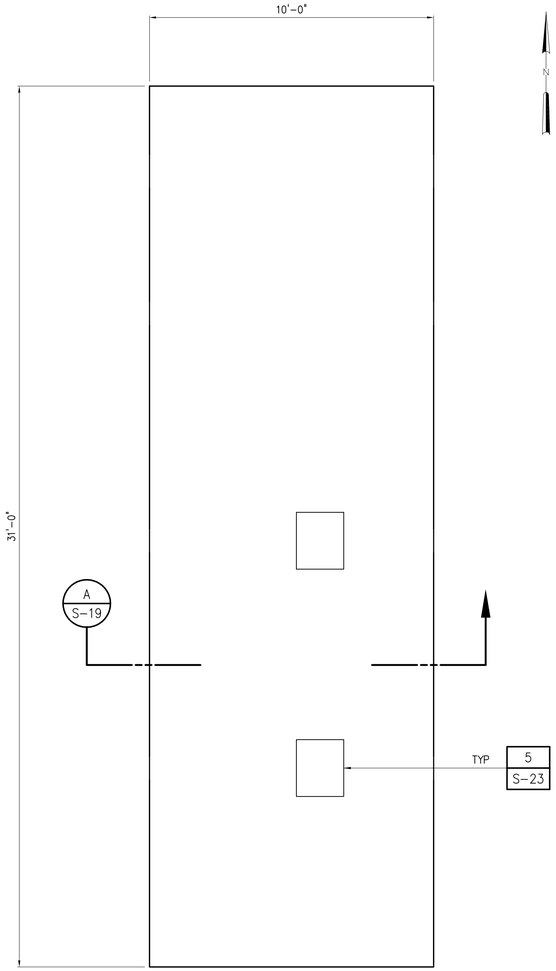

PLAN

3/8"=1'-0"

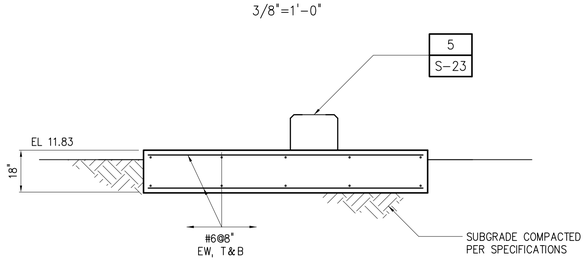

SECTION A S-19

3/8"=1'-0"

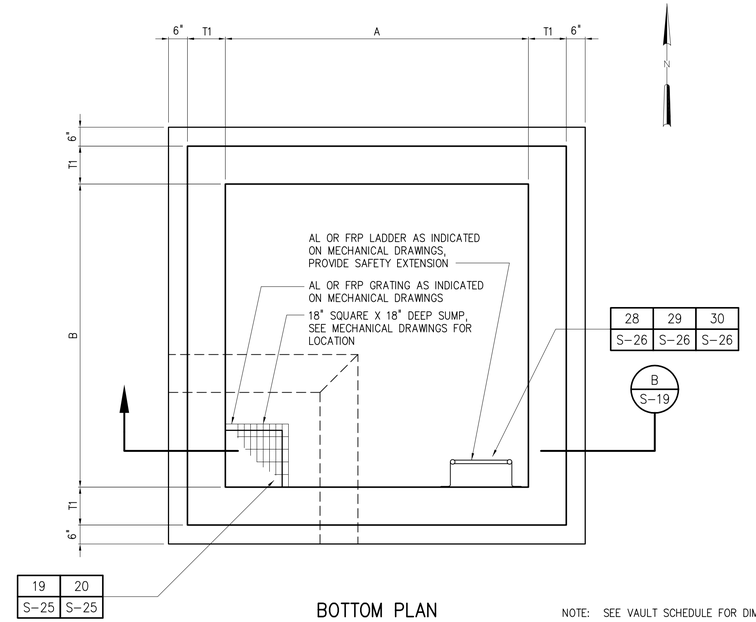

BOTTOM PLAN

N.T.S.

NOTE: SEE VAULT SCHEDULE FOR DIMENSIONS.

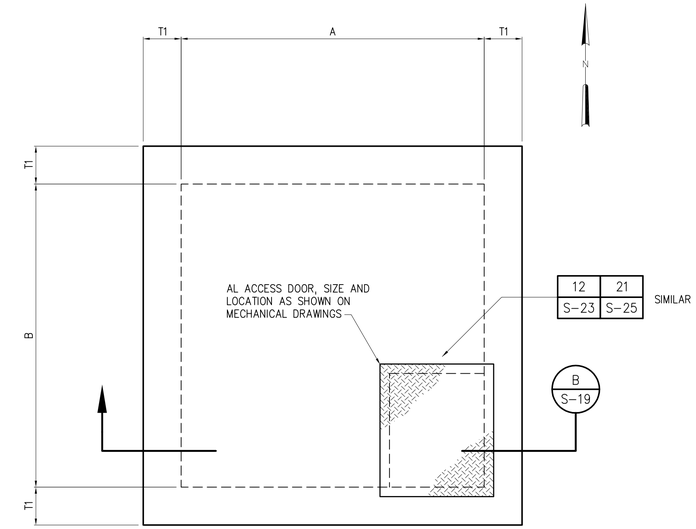

TOP PLAN

N.T.S.

TYPICAL VAULT DETAIL 1 M-7

N.T.S.

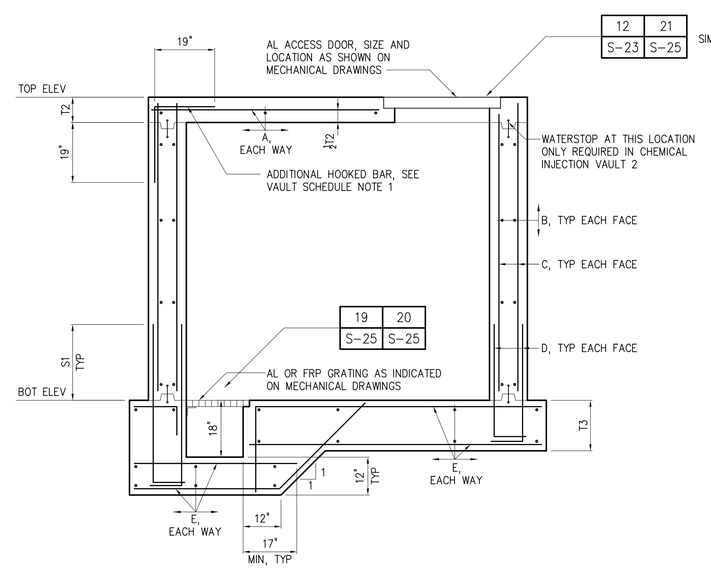

NOTE: SEE VAULT SCHEDULE FOR DIMENSIONS.

SECTION B S-19

N.T.S.

VAULT SCHEDULE

VAULT	TOP ELEV	BOT ELEV	DIMENSIONS						REINFORCING					REFERENCE DRAWING
			A	B	S1	T1	T2	T3	A	B	C	D	E	
RAW WATER CONTROL VAULT 1	11.50	2.50	8'-6"	6'-0"	19"	16"	8"	16"	#5@8"	#5@8"	#5@8"	#5@8"	#6@8"	M-7
RAW WATER CONTROL VAULT 2	11.50	2.50	8'-0"	8'-0"	19"	16"	8"	16"	#5@8"	#5@8"	#5@8"	#5@8"	#6@8"	M-7
CHEMICAL INJECTION VAULT 1	11.00	2.50	6'-0"	8'-0"	19"	16"	8"	16"	#5@8"	#5@8"	#5@8"	#5@8"	#6@8"	M-21
CHEMICAL INJECTION VAULT 2	9.92	2.92	6'-0"	8'-0"	19"	16"	12"*	16"	#7@8"	#5@8"	#5@8"	#5@8"	#6@8"	M-22

* SEE NOTE 2

NOTES:

1. ADDITIONAL HOOKED BARS ARE ONLY REQUIRED FOR RAW WATER CONTROL VAULT 1. HOOKED BARS SHALL BE THE SAME SIZE AND SPACING AS VERTICAL WALL STEEL.
2. AT CHEMICAL INJECTION VAULT 2 CONTRACTOR SHALL PROVIDE 2 MATS OF STEEL IN TOP SLAB. MATS SHALL HAVE ADEQUATE COVER AS SPECIFIED IN "GENERAL CONCRETE NOTES" ON S-24. SEE NOTE 3 FOR BAR PLACEMENT.
3. CONTRACTOR SHALL COORDINATE PLACEMENT OF SLAB REINFORCING WITH SECTION B/S-19 SUCH THAT TRANSVERSE REINFORCING BARS ARE LOCATED CLOSEST TO THE CONCRETE SURFACE. LINE BARS AS SHOWN IN SECTION B/S-19 REPRESENT TRANSVERSE REINFORCEMENT WHILE DOT BARS REPRESENT LONGITUDINAL REINFORCEMENT. COORDINATE WITH VAULT SCHEDULE AND MECHANICAL DRAWINGS FOR VAULT DIMENSIONS.

3/8"=1'-0" 12" 0 1 2 4'

NO.	DATE	ISSUED FOR	BY
3	01/08	RECORD DRAWING	P.A.D.
2	10/03	BID SET	S.J.
1	10/03	BLDG. DEPT. REVISIONS	S.J.

DESIGNED W.G.L./A.G.M.
DRAWN W.G.L./A.G.M.
CHECKED S.J.
PROJ. ENGR. P.A.D.

SHAJAN JOYKUTTY P.E.
No. 43323

HAZEN AND SAWYER
Environmental Engineers & Scientists
4000 Hollywood Boulevard, Suite 750N
Hollywood, Florida 33021
Certificate of Authorization Number: 2771

SCALE 3/8"=1'-0"

CONTRACT: –
CLIENTS PROJECT:
ENGINEERS PROJECT: 40406
CAD REFERENCE: 40406S19

CITY OF HALLANDALE BEACH
UTILITIES DEPARTMENT

6 MGD MEMBRANE SOFTENING W.T.P.

CONCENTRATE PUMP STATION/VAULTS
PLANS, SECTIONS AND DETAILS

DATE: JANUARY 2008
SHEET: 82 OF 162
DRAWING: S-19

RECORD DRAWING

BY: AMEDINA
RECT DATE: 2/6/2008 5:01 PM

XREFs= ..\400\CP-PT-SB,..\400\CP-S01-S,..\001\RWV-DA-S

File = O:\40406\40406-001\Drawings\STRU\40406S19 Saved by GDIAZ Save date = 1/30/2008 3:48 PM

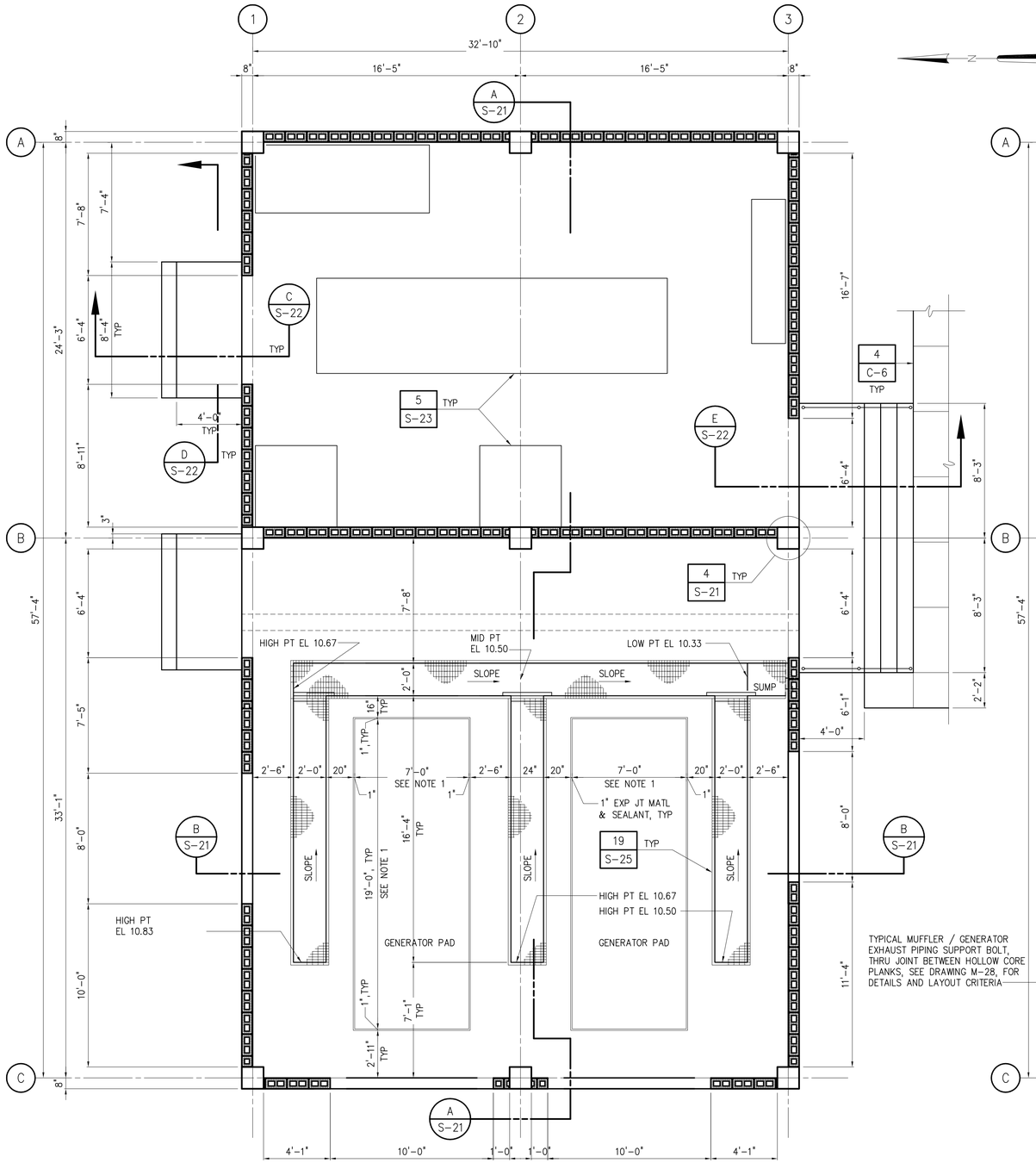

BOTTOM PLAN

1/4"=1'-0"

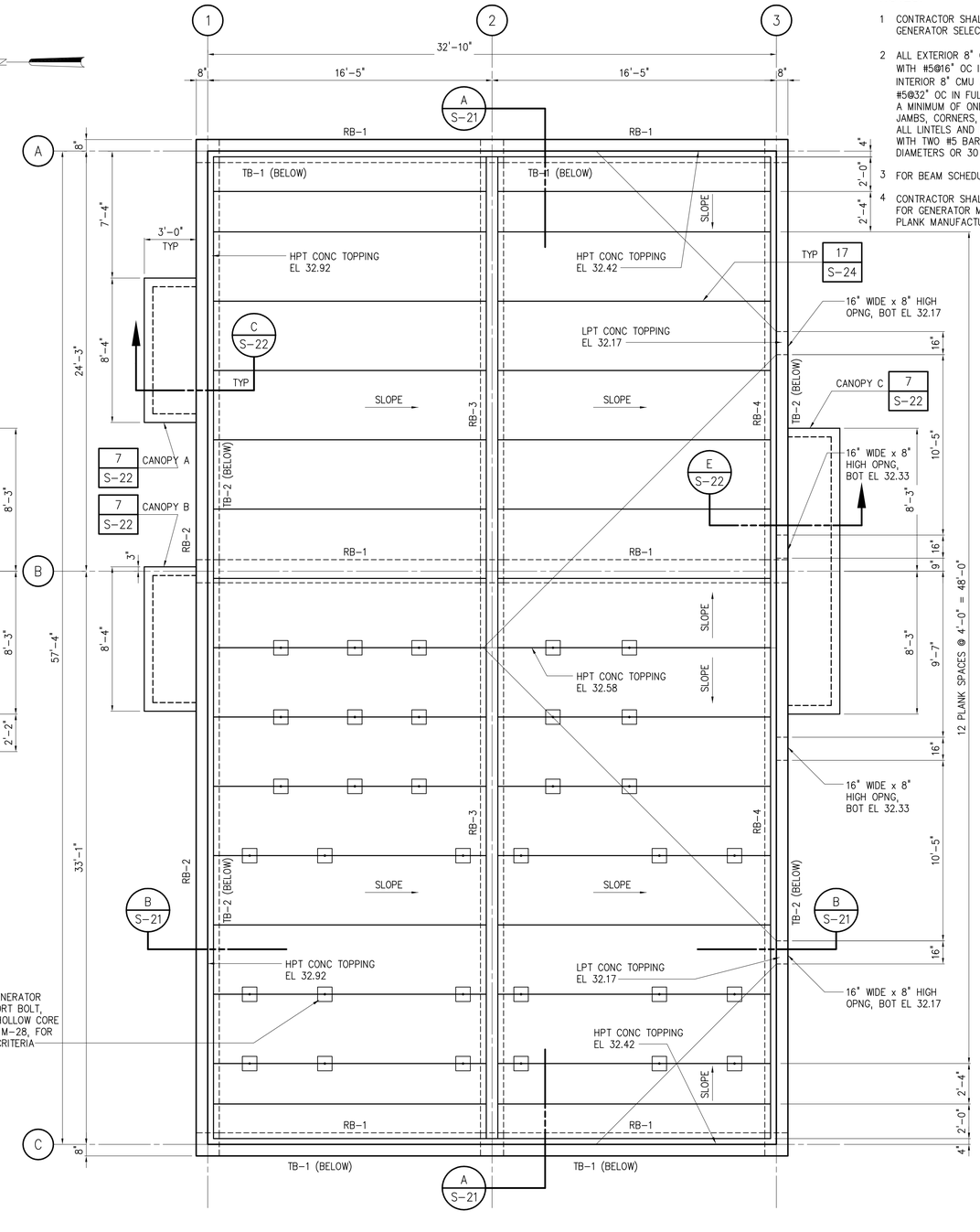

ROOF PLAN

1/4"=1'-0"

NOTES:

1. CONTRACTOR SHALL VERIFY DIMENSIONS INDICATED WITH GENERATOR SELECTED.
2. ALL EXTERIOR 8" CMU WALLS SHALL BE REINFORCED WITH #5@16" OC IN FULLY GROUTED CELLS. ALL INTERIOR 8" CMU WALLS SHALL BE REINFORCED WITH #5@32" OC IN FULLY GROUTED CELLS. ADDITIONALLY, A MINIMUM OF ONE #5 BAR SHALL BE PLACED AT ALL JAMBS, CORNERS, INTERSECTIONS AND WALL ENDS. ALL LINTELS AND BOND BEAMS SHALL BE REINFORCED WITH TWO #5 BARS. LAP REINFORCING BARS 48 BAR DIAMETERS OR 30 INCHES MINIMUM AT SPLICES.
3. FOR BEAM SCHEDULE, SEE DRAWING S-22.
4. CONTRACTOR SHALL COORDINATE SUPPORT LOCATIONS FOR GENERATOR MUFFLERS AND EXHAUST PIPING WITH PLANK MANUFACTURER.

TYPICAL MUFFLER / GENERATOR EXHAUST PIPING SUPPORT BOLT, THRU JOINT BETWEEN HOLLOW CORE PLANKS, SEE DRAWING M-28, FOR DETAILS AND LAYOUT CRITERIA

NO.	DATE	ISSUED FOR	BY
3	01/08	RECORD DRAWING	P.A.D.
2	10/03	BID SET	S.J.
1	10/03	BLDG. DEPT. REVISIONS	S.J.

DESIGNED W.G.L.
DRAWN W.G.L.
CHECKED S.J.
PROJ. ENGR. P.A.D.

SHAJAN JOYKUTTY P.E.
No. 43323

HAZEN AND SAWYER
Environmental Engineers & Scientists
4000 Hollywood Boulevard, Suite 750N
Hollywood, Florida 33021
Certificate of Authorization Number: 2771

SCALE 1/4"=1'-0"

CONTRACT: –
CLIENTS PROJECT:
ENGINEERS PROJECT: 40406
CAD REFERENCE: 40406S20

CITY OF HALLANDALE BEACH
UTILITIES DEPARTMENT

6 MGD MEMBRANE SOFTENING W.T.P.

EMERGENCY GENERATOR BUILDING

BOTTOM AND ROOF PLANS

DATE: JANUARY 2008
SHEET: 83 OF 162
DRAWING: S-20

RECORD DRAWING

PLOT DATE: 2/8/2008 5:01 PM BY: AMEDINA

XREFs= ..\TBLOCK\40406-TB,..\950\GB-P1-SB,..\950\GB-PR-SB,..\950\GB-P1-AB

File = O:\40406\40406-001\Drawings\STRU\40406S20 Saved by GDIAZ Save date = 1/30/2008 3:49 PM

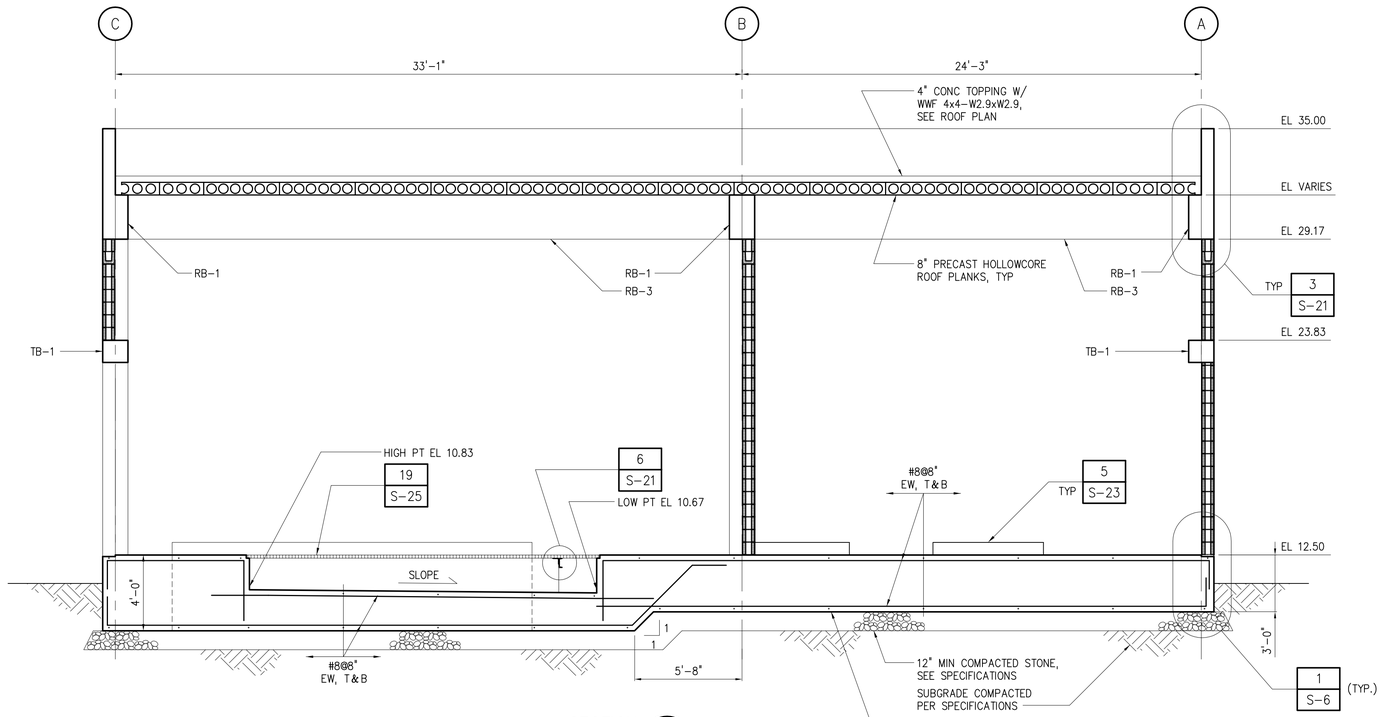

SECTION A S-20
1/4"=1'-0"

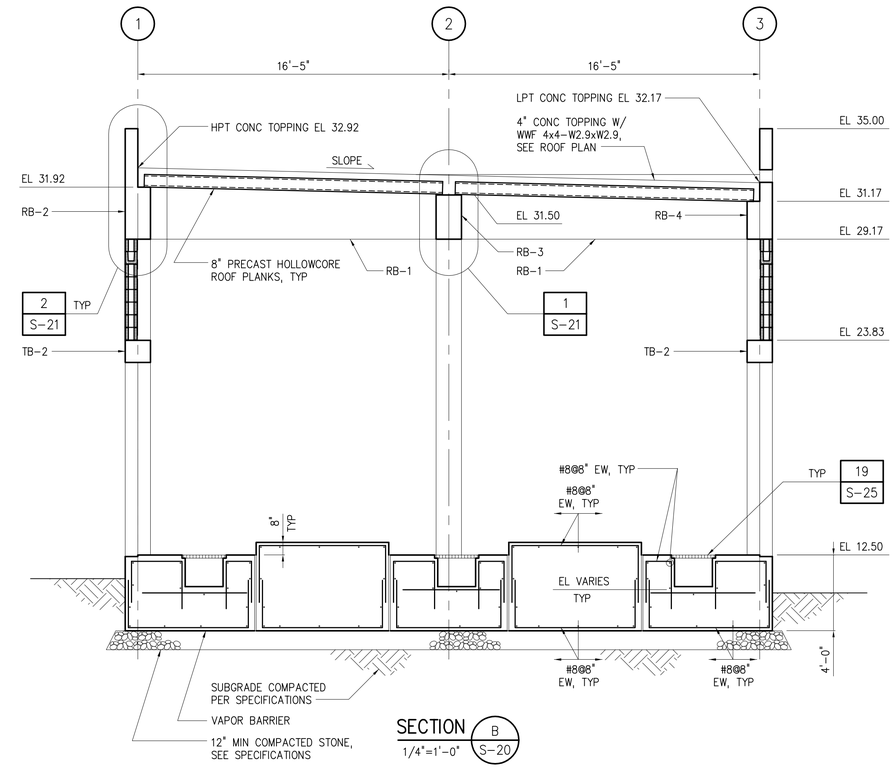

SECTION B S-20
1/4"=1'-0"

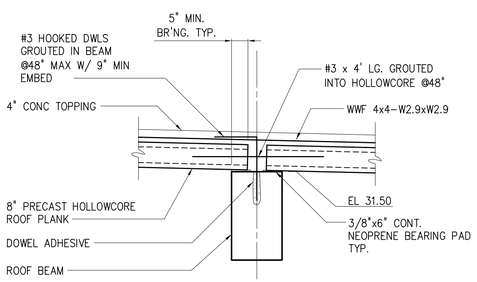

DETAIL 1
1/2"=1'-0"
S-21

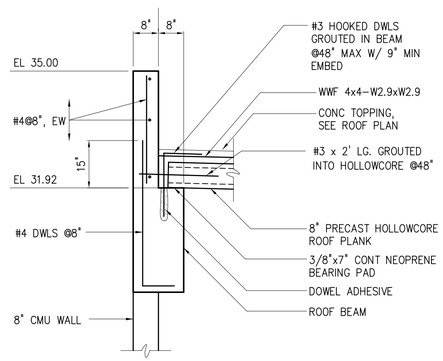

NOTE: FOR CONNECTION OF MASONRY WALL TO CONC BEAM, SEE DETAIL 16/S-24

DETAIL 2
1/2"=1'-0"
S-21

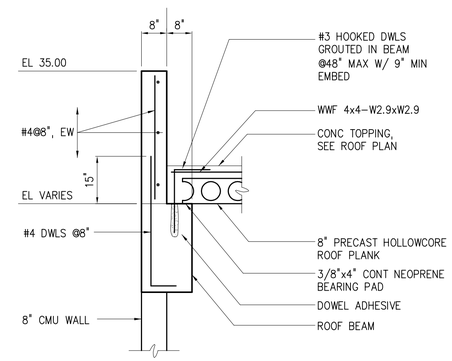

NOTE: FOR CONNECTION OF MASONRY WALL TO CONC BEAM, SEE DETAIL 16/S-24

DETAIL 3
1/2"=1'-0"
S-21

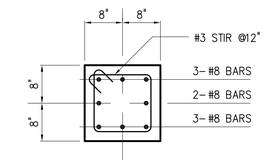

DETAIL 4
3/4"=1'-0"
S-20

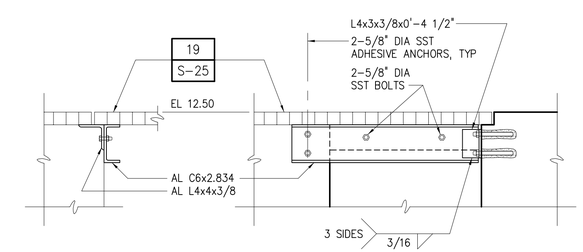

DETAIL 6
1"=1'-0"
S-21

NO.	DATE	ISSUED FOR	BY
3	01/08	RECORD DRAWING	P.A.D.
2	10/03	BID SET	S.J.
1	10/03	BLDG. DEPT. REVISIONS	S.J.

DESIGNED W.G.L.
DRAWN W.G.L.
CHECKED S.J.
PROJ. ENGR. P.A.D.

SHAJAN JOYKUTTY P.E.
No. 43323

HAZEN AND SAWYER
Environmental Engineers & Scientists
4000 Hollywood Boulevard, Suite 750N
Hollywood, Florida 33021
Certificate of Authorization Number: 2771

SCALE: AS NOTED

CONTRACT: –
CLIENTS PROJECT:
ENGINEERS PROJECT: 40406
CAD REFERENCE: 40406S21

CITY OF HALLANDALE BEACH
UTILITIES DEPARTMENT

6 MGD MEMBRANE SOFTENING W.T.P.

EMERGENCY GENERATOR BUILDING
SECTIONS AND DETAILS SHEET 1

DATE: JANUARY 2008
SHEET: 84 OF 162
DRAWING: S-21

RECORD DRAWING

PLOT DATE: 2/8/2008 5:01 PM BY: AMEDINA

XREFs= ..\950\GB-S01-S,..\950\GB-S02-S,..\950\GB-S-DB,..\950\GB-S-DE,..\950\GB-S-DF,..\950\GB-S-DA,..\950\GB-S-DC

File = O:\40406\40406-001\Drawings\STRU\40406S21 Saved by GDIAZ Save date = 1/30/2008 3:51 PM

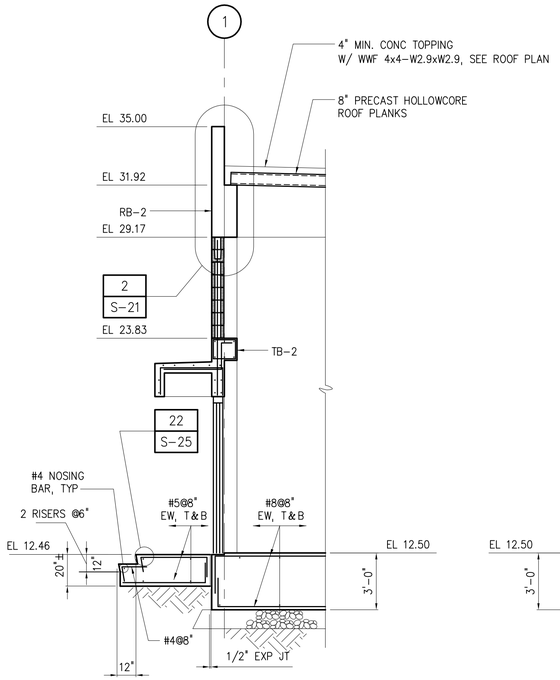

SECTION C 1/4"=1'-0" S-20

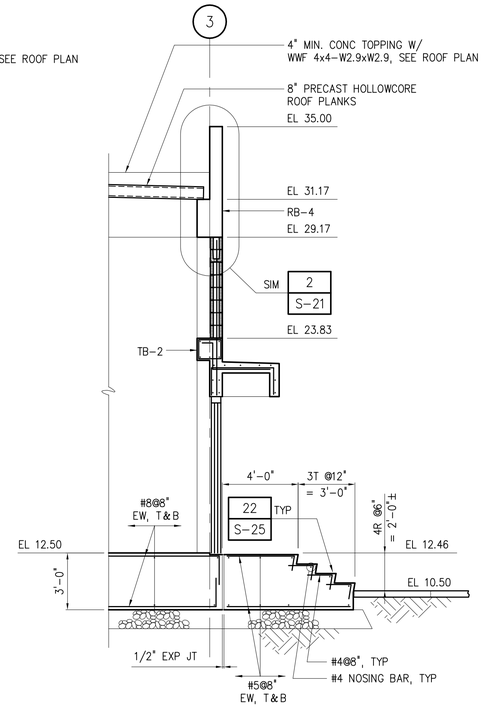

SECTION E 1/4"=1'-0" S-20

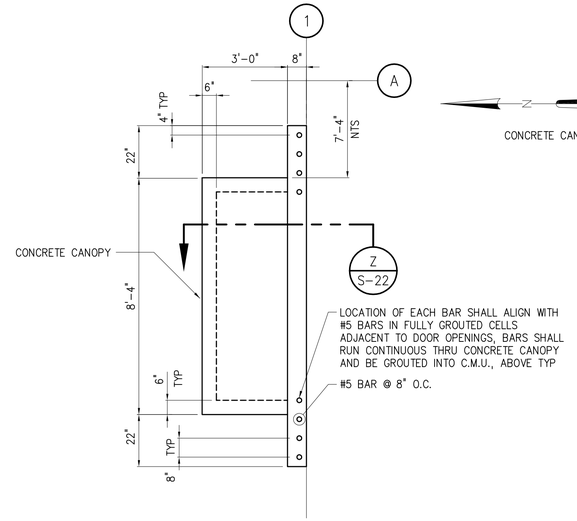

CONCRETE CANOPY "A" PLAN

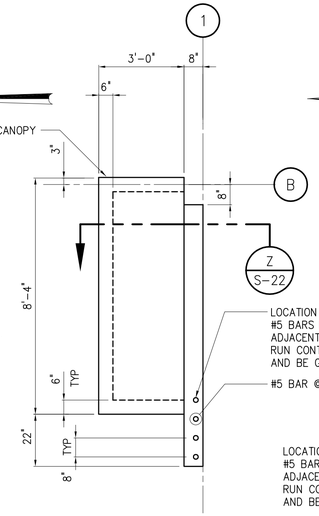

CONCRETE CANOPY "B" PLAN

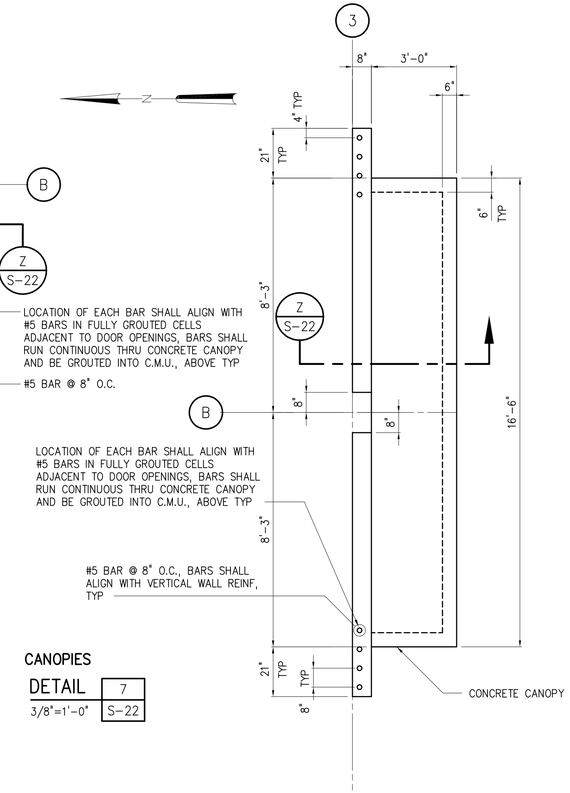

CANOPIES DETAIL 7 S-22
3/8"=1'-0"

CONCRETE CANOPY "C" PLAN

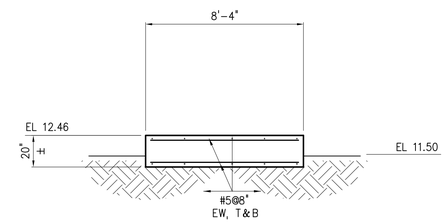

SECTION D 1/4"=1'-0" S-20

BEAM SCHEDULE

MARK	SPAN TYPE	SIZE W	SIZE D	TOP ELEV	No REQD	MAIN REINF TOP	MAIN REINF BOT	ADDITIONAL REINF "A" REINF	ADDITIONAL REINF "B" REINF	ADDITIONAL REINF "C" REINF	STIRRUPS	REMARKS
RB-1	END	16	VAR	VAR	6	4-#9	4-#9				#4@12" THRU OUT	BOTTOM EL 29.17 ADD #5 MID-DEPTH EF
RB-2	END	16	33	31.92	2	4-#9	4-#9				#4@12" THRU OUT	ADD #5 MID-DEPTH EF
RB-3	END	16	28	31.50	2	3-#10	3-#10	2-#9	2-#9	2-#9	#4@12" THRU OUT	ADD #5 MID-DEPTH EF
RB-4	END	16	24	31.17	2	4-#9	4-#9				#4@12" THRU OUT	ADD #5 MID-DEPTH EF
TB-1	END	16	14	23.83	4	2-#6	3-#6				#3@12" THRU OUT	
TB-2	END	16	14	23.83	4	3-#6	3-#6				#3@12" THRU OUT	SEE SECTION Z THIS DWG.

NOTE: 1 SEE DETAIL 5/S-22 FOR TYPICAL BEAM ELEVATIONS.

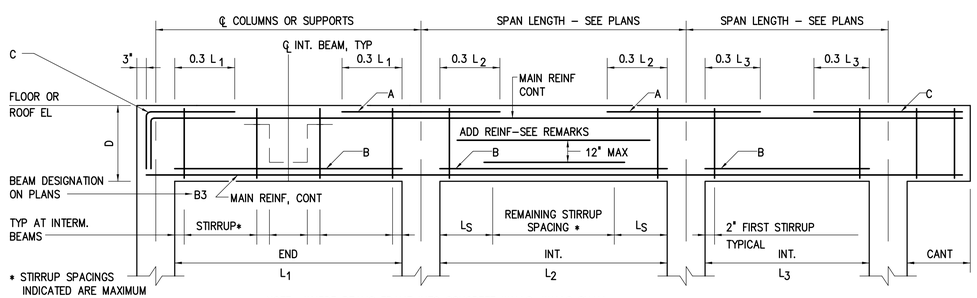

NOTE: WHERE BEAMS FRAME INTO CONCRETE WALLS, WALLS SHALL BE BLOCKED OUT FULL HEIGHT AND WIDTH OF BEAM TO PROVIDE A MINIMUM 8" SEAT FOR BEAM BEARING. WALL REINFORCEMENT SHALL NOT BE INTERRUPTED THROUGH BLOCKOUT.

TYPICAL BEAM ELEVATIONS
DETAIL 5 S-22
N.T.S.

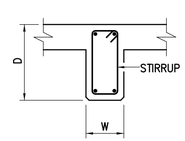

TYPICAL BEAM SECTION

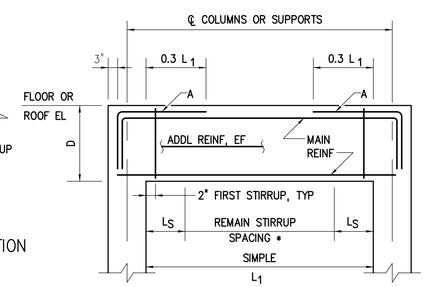

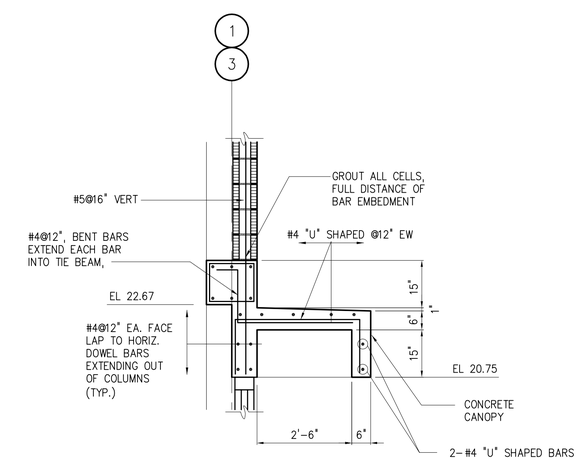

SECTION Z 1/2"=1'-0" S-22

NO.	DATE	ISSUED FOR	BY
3	01/08	RECORD DRAWING	P.A.D.
2	10/03	BID SET	S.J.
1	10/03	BLDG. DEPT. REVISIONS	S.J.

DESIGNED W.G.L.
DRAWN W.G.L.
CHECKED P.A.D.
PROJ. ENGR. P.A.D.

SHAJAN JOYKUTTY P.E.
No. 43323

HAZEN AND SAWYER
Environmental Engineers & Scientists
4000 Hollywood Boulevard, Suite 750N
Hollywood, Florida 33021
Certificate of Authorization Number: 2771

SCALE: AS NOTED

CONTRACT: –
CLIENTS PROJECT:
ENGINEERS PROJECT: 40406
CAD REFERENCE: 40406S22

CITY OF HALLANDALE BEACH
UTILITIES DEPARTMENT

6 MGD MEMBRANE SOFTENING W.T.P.

EMERGENCY GENERATOR BUILDING
SECTIONS AND DETAILS SHEET 2

DATE: JANUARY 2008
SHEET: 85 OF 162
DRAWING: S-22

RECORD DRAWING

PLOT DATE: 2/8/2008 5:01 PM BY: AMEDINA

XREFs= ..\SDETAILS\033180I..\950\GB-S03-S..\950\GB-S04-S..\950\GB-S05-S..\950\GB-S-DD

File = O:\40406\40406-001\Drawings\STRU\40406S22 Saved by GDIAZ Save date = 1/30/2008 3:57 PM

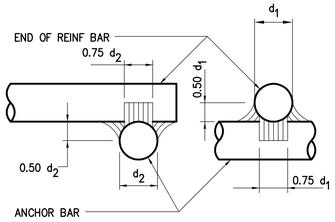

NOTES: BARS TO BE WELDED SHALL CONFORM TO ASTM A706. WELDING SHALL BE DONE BY CERTIFIED WELDERS IN CONFORMANCE WITH AWS DI.4. WELDING IS PERMITTED ONLY WHERE SHOWN ON PLANS OR OTHERWISE APPROVED BY THE ENGINEER.

REINFORCING BAR WELDMENT

DETAIL 1
N.T.S. –

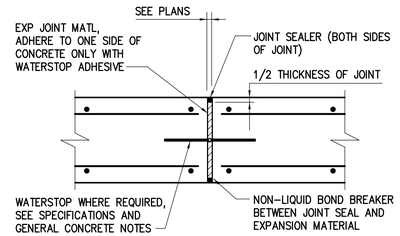

TYPICAL EXPANSION JOINT

DETAIL 2
N.T.S. –

NOTES

1. JOINTS SHALL BE FORMED BY AN APPROVED JOINT INSERT. SAWCUTTING OF JOINTS WILL NOT BE ALLOWED.
2. DEPTH SHALL BE 1 1/2" IN REINF CONC DEPTH SHALL BE 1/3 OF CONCRETE THICKNESS IN UNREINFORCED CONCRETE PAVEMENT.

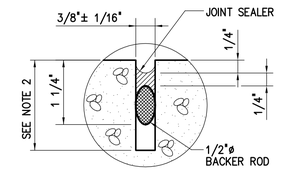

TYPICAL CONTRACTION JOINT

DETAIL 3
N.T.S. –

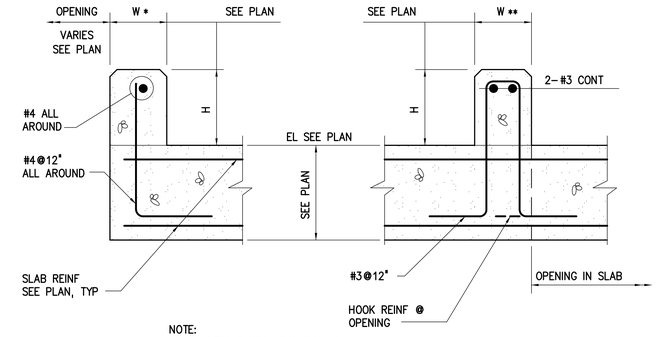

NOTE:
W* DENOTES CURBS LESS THAN 8"
W** DENOTES CURBS EQUAL TO OR GREATER THAN 8"
DOWELS MAY BE CAST IN OR ANCHORED WITH DOWEL ADHESIVE SYSTEM WITH A 6" MINIMUM EMBEDMENT.

TYPICAL CONCRETE CURB

DETAIL 4
N.T.S. –

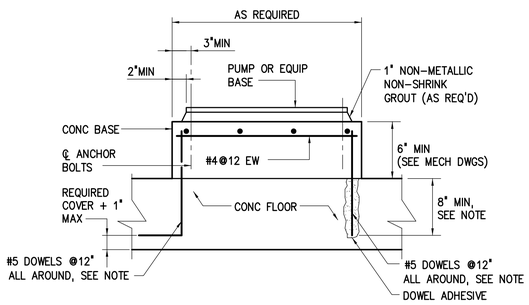

NOTE: DOWELS MAY BE CAST IN WITH 90° HOOK OR ANCHORED WITH DOWEL ADHESIVE AT CONTRACTORS OPTION. WHERE FLOOR IS 8" THICK OR LESS, USE #4 DOWELS EMBEDDED TO WITHIN 2" OF BOTTOM OF FLOOR SLAB.

TYP PUMP OR EQUIP BASE

DETAIL 5
N.T.S. –

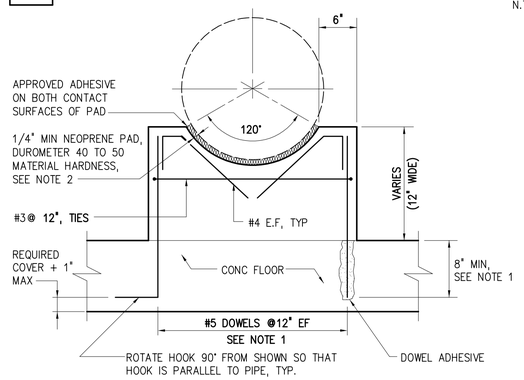

NOTES: 1 DOWELS MAY BE CAST IN WITH 90° HOOK OR ANCHORED WITH DOWEL ADHESIVE AT CONTRACTORS OPTION. WHERE FLOOR IS 8" THICK OR LESS, USE #4 DOWELS EMBEDDED TO WITHIN 2" OF BOTTOM OF FLOOR SLAB.

2 ENGINEER SHALL VERIFY THICKNESS OF PAD WILL ACCOMMODATE DESIGN MOVEMENT, PARTICULARLY FOR OUTSIDE AERIAL PIPE.

CRADLE PIPE SUPPORT

DETAIL 6
N.T.S. –

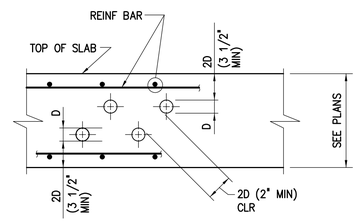

NOTE:
D DENOTES PIPE OR CONDUIT OD

PIPE OR CONDUIT EMBEDDED IN SLAB

DETAIL 7
N.T.S. –

PLACE EXTRA BARS OF THE SAME SIZE AS THE INTERRUPTED BARS AT EACH SIDE OF OPENINGS. QUANTITY OF EXTRA BARS AT EACH SIDE SHALL EQUAL HALF THE QUANTITY OF INTERRUPTED BARS, EXCEPT WHERE NOTED OTHERWISE. PROVIDE ONE DIAGONAL BAR EACH SIDE OF OPENING, SIZE TO BE EQUAL TO MAIN REINFORCING. (TYPICAL EACH FACE)

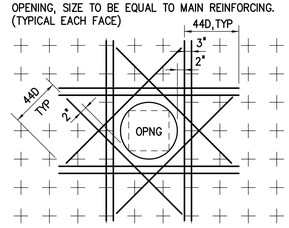

NOTE: THIS DETAIL IS FOR OPENINGS 8"ø OR LARGER, FOR SMALLER OPENINGS, BEND BARS.

TYPICAL REINF AT OPENINGS

DETAIL 12
N.T.S. –

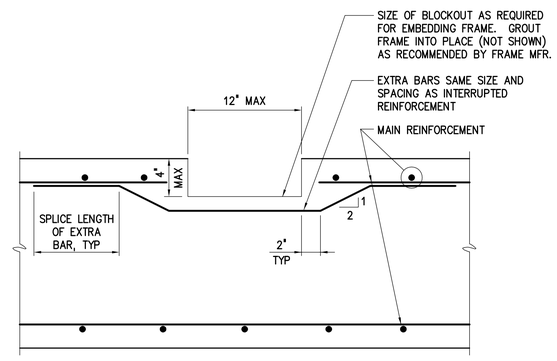

TYPICAL BLOCKOUT FOR EMBEDDED EQUIPMENT FRAME

DETAIL 8
N.T.S. –

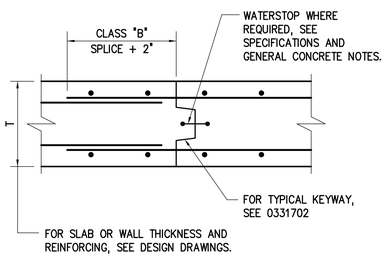

TYPICAL CONSTRUCTION JOINT

DETAIL 9
N.T.S. –

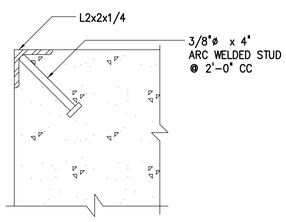

NOTE: CORNER GUARD REQUIRED ONLY WHERE SHOWN ON PLANS

CORNER GUARD

DETAIL 10
N.T.S. –

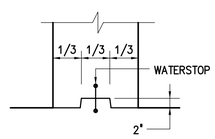

TYPICAL KEYWAY

DETAIL 11
N.T.S. –

NO.	DATE	ISSUED FOR	BY
3	01/08	RECORD DRAWING	P.A.D.
2	10/03	BID SET	S.J.
1	10/03	BLDG. DEPT. REVISIONS	S.J.

DESIGNED H & S
DRAWN H & S
CHECKED S.J.
PROJ. ENGR. P.A.D.

SHAJAN JOYKUTTY P.E.
No. 43323

HAZEN AND SAWYER
Environmental Engineers & Scientists
4000 Hollywood Boulevard, Suite 750N
Hollywood, Florida 33021
Certificate of Authorization Number: 2771

SCALE N.T.S.

CONTRACT: –
CLIENTS PROJECT:
ENGINEERS PROJECT: 40406
CAD REFERENCE: 40406S23

CITY OF HALLANDALE BEACH
UTILITIES DEPARTMENT

6 MGD MEMBRANE SOFTENING W.T.P.

STRUCTURAL STANDARD DETAILS

SHEET 1

DATE: JANUARY 2008
SHEET: 86 OF 162
DRAWING: S-23

RECORD DRAWING

PLOT DATE: 2/6/2008 5:01 PM BY: AMEDINA

XREFs= ..\SDETAILS\0321000,..\SDETAILS\0325100,..\SDETAILS\0325101,..\SDETAILS\0331004,..\SDETAILS\0331600,..\SDETAILS\0331601,..\SDETAILS\0331604,..\SDETAILS\0331701,..\SDETAILS\0331702,..\SDETAILS\0331703,..\SDETAILS\0331710,..\SDETAILS\0554001

File = O:\40406\40406-001\Drawings\STRU\40406S23 Saved by GDIAZ Save date = 1/30/2008 3:58 PM

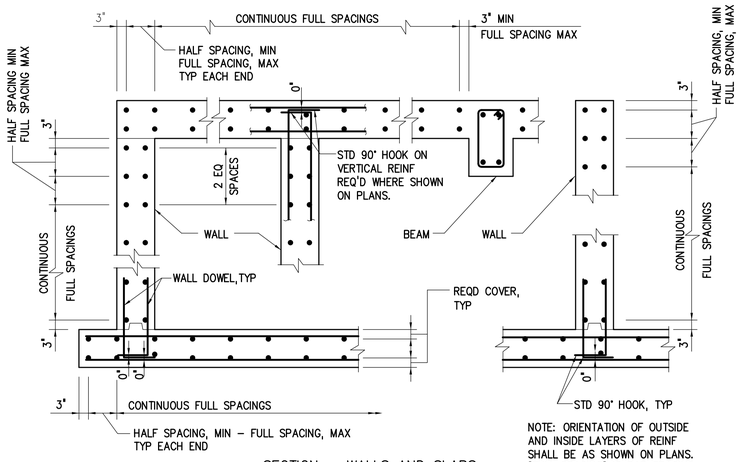

NOTE: ORIENTATION OF OUTSIDE AND INSIDE LAYERS OF REINF SHALL BE AS SHOWN ON PLANS. "FULL SPACING" IS BAR SPACING CALLED OUT ON PLANS.

SECTION – WALLS AND SLABS

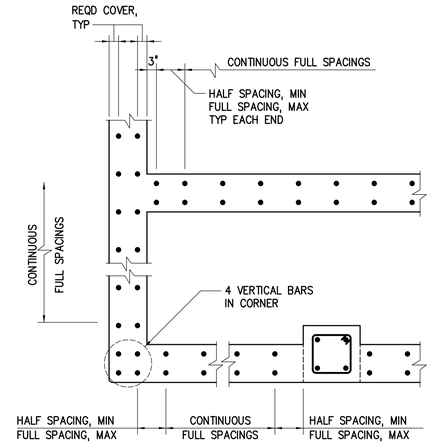

PLAN – WALLS

TYPICAL BAR PLACEMENT

DETAIL 13
N.T.S. –

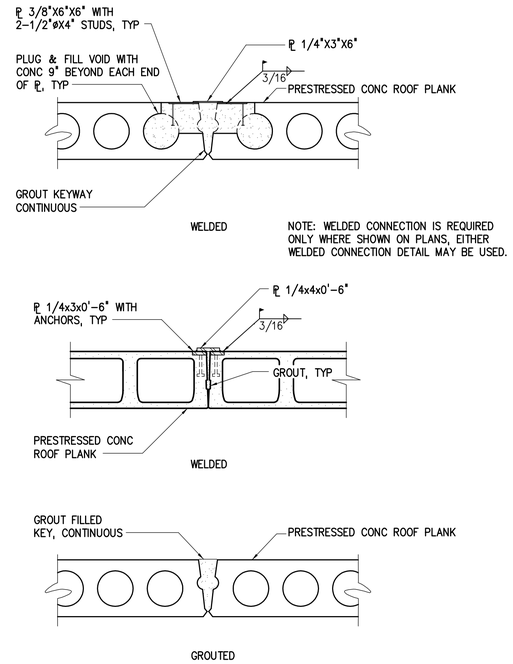

NOTE: WELDED CONNECTION IS REQUIRED ONLY WHERE SHOWN ON PLANS, EITHER WELDED CONNECTION DETAIL MAY BE USED.

PRECAST PLANK CONNECTION

DETAIL 17
N.T.S. –

GENERAL CONCRETE NOTES:

1 CONCRETE PROTECTION FOR REINFORCING SHALL BE AS FOLLOWS UNLESS OTHERWISE NOTED ON THE DRAWINGS:
- A – CONCRETE DEPOSITED DIRECTLY AGAINST SOIL — 3"
- B – CONCRETE EXPOSED TO WEATHER (#5 OR SMALLER) — 1 1/2"
  - (#6 OR LARGER) — 2"
- C – SLABS — 1 1/2"
  - AT SURFACES CONTACTING WATER OR SEWAGE — 2"
- D – BEAMS AND COLUMNS (TO MAIN REINFORCEMENT) — 2"
  - (TO COLUMN TIES OR STIRRUPS) — 1 1/2"
  - SURFACES EXPOSED TO SEAWATER — 4"
- E – WALLS 12" OR MORE — 2"
  - WALLS LESS THAN 12" (#5 OR SMALLER) — 1 1/2"
  - (#6 OR LARGER) — 2"
  - SURFACES EXPOSED TO SEAWATER — 3"
- F – FOR SURFACES EXPOSED TO WATER OR SEWAGE IN BEAMS, COLUMNS AND WALLS ADD 1/2" TO ABOVE.

2 SPLICES SHALL BE CLASS "B" CONFORMING TO THE PROVISIONS OF ACI 318 UNLESS NOTED OTHERWISE.

3 ALL EMBEDDED ITEMS SHALL BE INSTALLED AND SECURED IN PLACE BEFORE CONCRETE PLACEMENT. CONSULT ELECTRICAL, MECHANICAL AND HVAC DRAWINGS FOR PIPING, EMBEDDED ITEMS AND OPENINGS.

4 ALL JOINTS IN WATER BEARING STRUCTURES SHALL HAVE A WATERSTOP. ALL JOINTS BELOW GRADE IN WALLS OR SLABS WHICH ENCLOSE AN ACCESSIBLE AREA SHALL HAVE WATERSTOPS.

5 CONSTRUCTION JOINTS NOT SHOWN SHALL BE SUBMITTED BY THE CONTRACTOR FOR THE APPROVAL OF THE ENGINEER PRIOR TO SUBMITTING REBAR SHOP DRAWINGS.

6 PROVIDE VERTICAL CONSTRUCTION JOINTS IN WALLS AND HORIZONTAL JOINTS IN SLABS NOT GREATER THAN 45'-0" ON CENTER.

7 NO BACKFILL SHALL BE PLACED AGAINST ANY SUBSTRUCTURE WALLS UNLESS ADJACENT FLOOR SLABS HAVE TAKEN THEIR FINAL SET, OR WALLS HAVE BEEN PROPERLY BRACED, AND IN ANY CASE NOT SOONER THAN 28 DAYS AFTER THE PLACING OF CONCRETE UNLESS APPROVED BY THE ENGINEER.

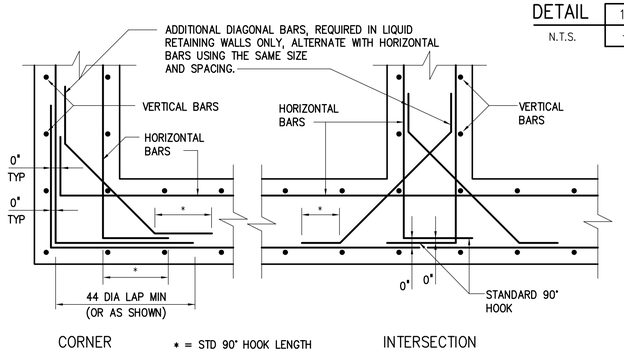

TYPICAL WALL REINFORCING

DETAIL 14
N.T.S. –

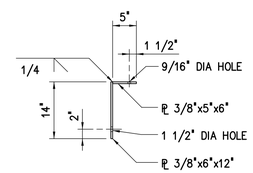

SECTION THRU PLATE

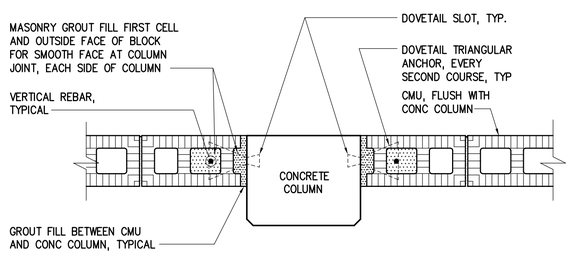

MASONRY TIE-IN AT COLUMN

DETAIL 15
N.T.S. –

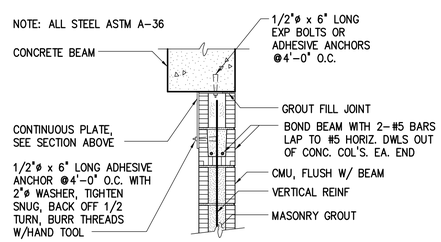

MASONRY WALL TO CONCRETE BEAM CONNECTION

DETAIL 16
N.T.S. –

NO.	DATE	ISSUED FOR	BY
3	01/08	RECORD DRAWING	P.A.D.
2	10/03	BID SET	S.J.
1	10/03	BLDG. DEPT. REVISIONS	S.J.

DESIGNED H&S
DRAWN H&S
CHECKED S.J.
PROJ. ENGR. P.A.D.

SHAJAN JOYKUTTY P.E.
No. 43323

HAZEN AND SAWYER
Environmental Engineers & Scientists
4000 Hollywood Boulevard, Suite 750N
Hollywood, Florida 33021
Certificate of Authorization Number: 2771

SCALE N.T.S.

CONTRACT: –
CLIENTS PROJECT:
ENGINEERS PROJECT: 40406
CAD REFERENCE: 40406S24

CITY OF HALLANDALE BEACH City of Choice
CITY OF HALLANDALE BEACH
UTILITIES DEPARTMENT

6 MGD MEMBRANE SOFTENING W.T.P.

STRUCTURAL STANDARD DETAILS

SHEET 2

DATE: JANUARY 2008
SHEET: 87 OF 162
DRAWING: S-24

RECORD DRAWING

PLOT DATE: 2/8/2008 5:01 PM BY: AMEDINA

XREFs= ..\SDETAILS\0331704,..\SDETAILS\0341203,..\SDETAILS\0417001R,..\SDETAILS\0420108R,..\SDETAILS\0331000,..\SDETAILS\0331700

File = O:\40406\40406-001\Drawings\STRU\40406S24 Saved by CDIAZ Save date = 1/30/2008 4:00 PM

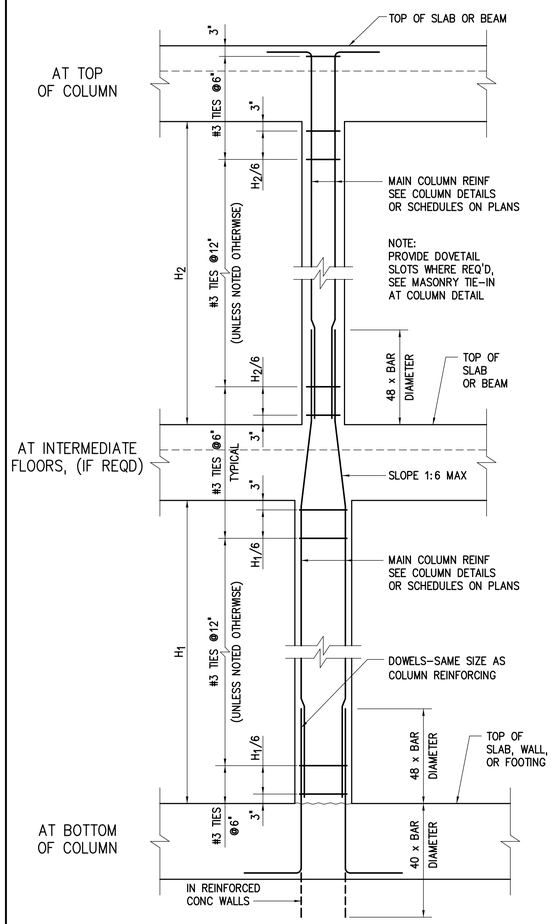

TYPICAL COLUMN ELEVATION

DETAIL 18
N.T.S. –

SPAN, S	DEPTH (MIN)	CONCRETE ANCHOR (SIZE AND SPACING)
0'-0" ≤ S ≤ 4'-0"	1 1/2"	1/2"øx5 1/2" @ 18"
4'-0" < S ≤ 5'-0"	1 3/4"	5/8"øx6" @ 18"
5'-0" < S ≤ 5'-6"	2"	
5'-6" < S ≤ 6'-0"	2 1/4"	
6'-0" < S ≤ 6'-6"	2 1/2"	

SCHEDULE BASED ON 150 PSF

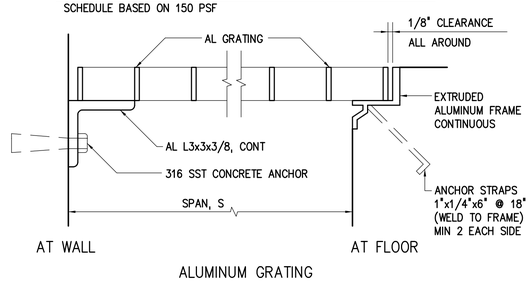

ALUMINUM GRATING

DETAIL 19
N.T.S. –

SPAN, S	DEPTH (MIN)	CONCRETE ANCHOR (SIZE AND SPACING)
0'-0" < S ≤ 3'-6"	1 1/2"	1/2"øx5 1/2" @ 18"
3'-6" < S ≤ 5'-0"	2"	5/8"øx6" @ 18"

SCHEDULE BASED ON 150 PSF

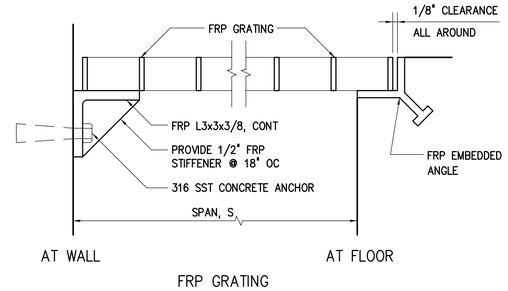

FRP GRATING

DETAIL 20
N.T.S. –

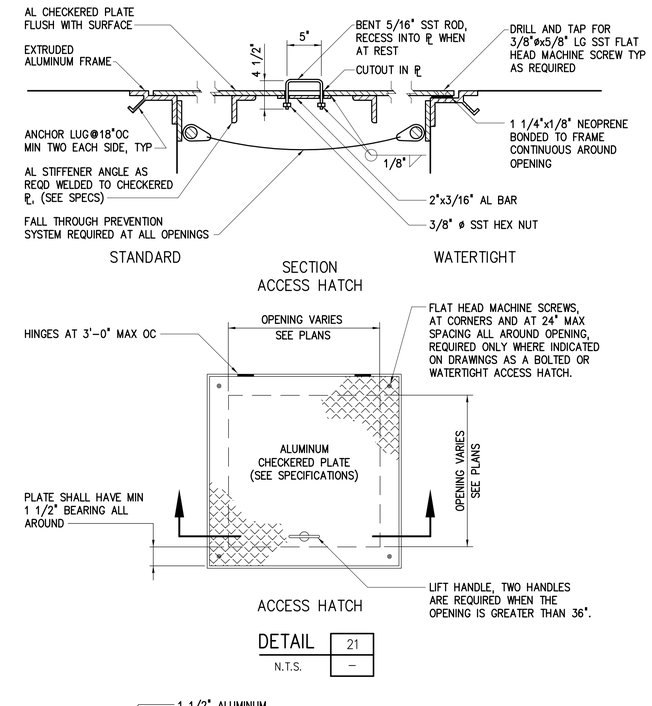

DETAIL 21
N.T.S. –

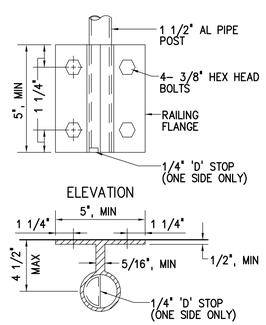

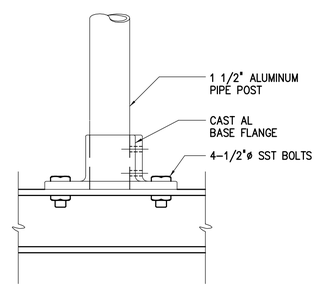

SURFACE MOUNTED TO METAL

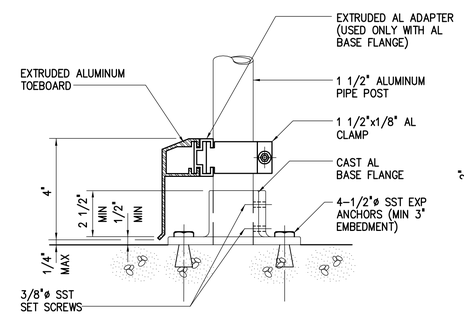

SURFACE MOUNTED TO CONCRETE

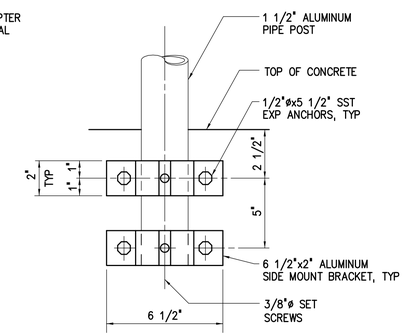

SIDE MOUNT TO CONCRETE

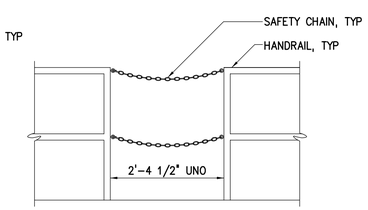

HANDRAIL SAFETY CHAIN GATE

DETAIL 24
N.T.S. –

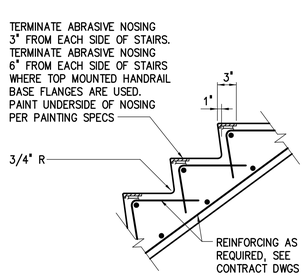

STAIR NOSING

DETAIL 22
N.T.S. –

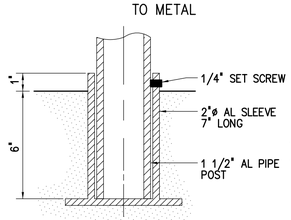

REMOVABLE POST IN CONCRETE

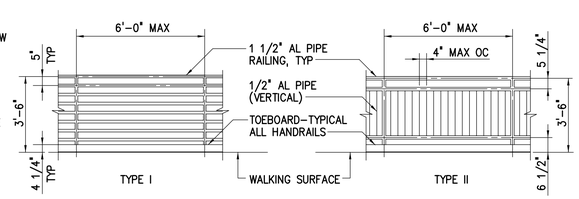

ELEVATION

ALUMINUM HANDRAILS

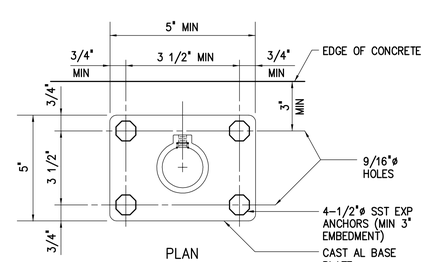

PLAN

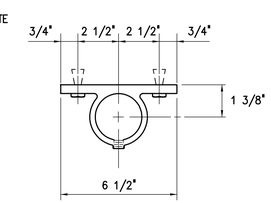

PLAN

DETAIL 23
N.T.S. –

NOTE: CONTRACTOR SHALL HAVE THE OPTION OF PROVIDING A TWO-PIPE HANDRAIL SYSTEM FOR THE PROCESS RELATED AREAS OF ALL STRUCTURES UNDER THE EXCEPTION TO SECTION 1022.4 OF THE FLORIDA BUILDING CODE. HANDRAIL LOCATED IN AREAS INTENDED FOR OFFICE USE SHALL BE DESIGNED TO MEET THE 4" RESTRICTION, SEE ARCHITECTURAL DRAWINGS.

NO.	DATE	ISSUED FOR	BY
3	01/08	RECORD DRAWING	P.A.D.
2	10/03	BID SET	S.J.
1	10/03	BLDG. DEPT. REVISIONS	S.J.

DESIGNED H & S
DRAWN H & S
CHECKED S.J.
PROJ. ENGR. P.A.D.

SHAJAN JOYKUTTY P.E.
No. 43323

HAZEN AND SAWYER
Environmental Engineers & Scientists
4000 Hollywood Boulevard, Suite 750N
Hollywood, Florida 33021
Certificate of Authorization Number: 2771

SCALE N.T.S.

CONTRACT: –
CLIENTS PROJECT:
ENGINEERS PROJECT: 40406
CAD REFERENCE: 40406S25

CITY OF HALLANDALE BEACH
UTILITIES DEPARTMENT

6 MGD MEMBRANE SOFTENING W.T.P.

STRUCTURAL STANDARD DETAILS
SHEET 3

DATE: JANUARY 2008
SHEET: 88 OF 162
DRAWING: S-25

RECORD DRAWING

PLOT DATE: 2/8/2008 5:01 PM BY: AMEDINA

XREFs= ..\SDETAILS\0331800,..\SDETAILS\0553000,..\SDETAILS\0553010,..\SDETAILS\0554000,..\SDETAILS\0650000,..\SDETAILS\0552000R,..\SDETAILS\0552001

File = O:\40406\40406-001\Drawings\STRU\40406S25 Saved by GDIAZ Save date = 1/30/2008 4:02 PM

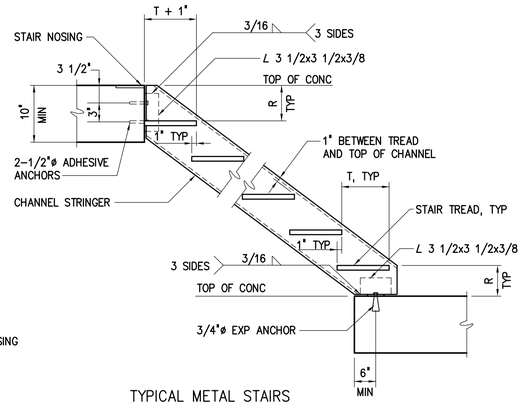

TYPICAL METAL STAIRS

DETAIL 27
NTS –

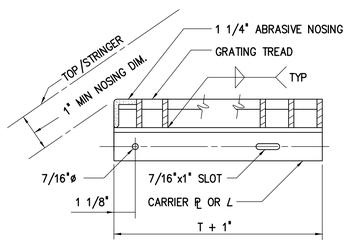

TYPICAL TREAD DETAIL

DETAIL 25
NTS –

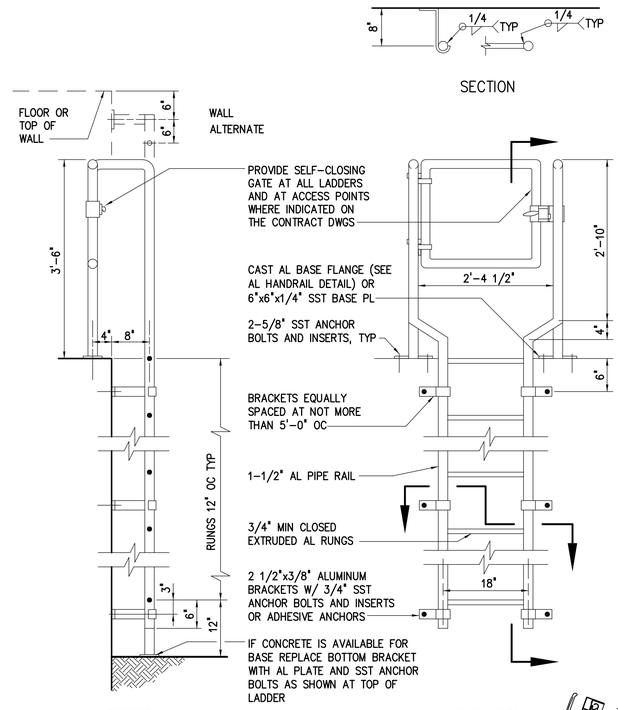

ALUMINUM LADDER

DETAIL 28
NTS –

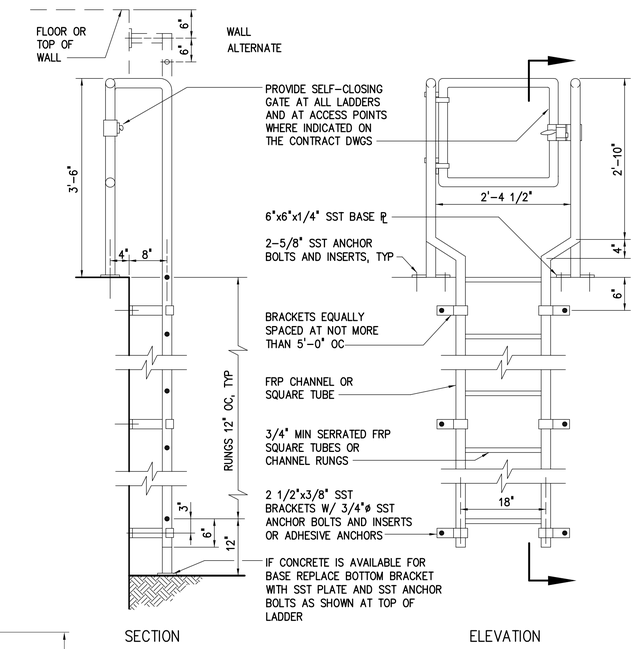

FRP LADDER

DETAIL 30
NTS –

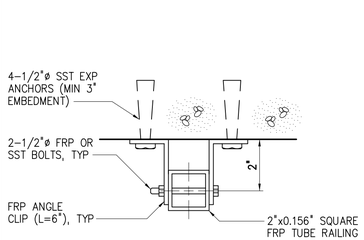

SIDE MOUNTED TO CONCRETE

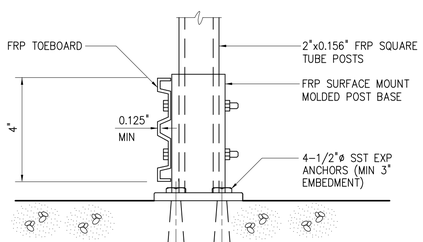

SURFACE MOUNTED TO CONCRETE

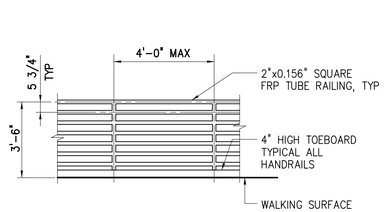

ELEVATION

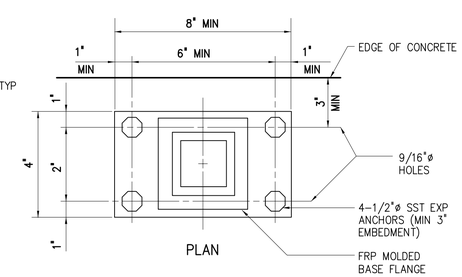

PLAN

FRP HANDRAIL SYSTEM

NOTE: CONTRACTOR SHALL HAVE THE OPTION OF PROVIDING A TWO-PIPE HANDRAIL SYSTEM FOR THE PROCESS RELATED AREAS OF ALL STRUCTURES UNDER THE EXCEPTION TO SECTION 1022.4 OF THE FLORIDA BUILDING CODE. HANDRAIL LOCATED IN AREAS INTENDED FOR OFFICE USE SHALL BE DESIGNED TO MEET THE 4" RESTRICTION, SEE ARCHITECTURAL DRAWINGS.

DETAIL 26
NTS –

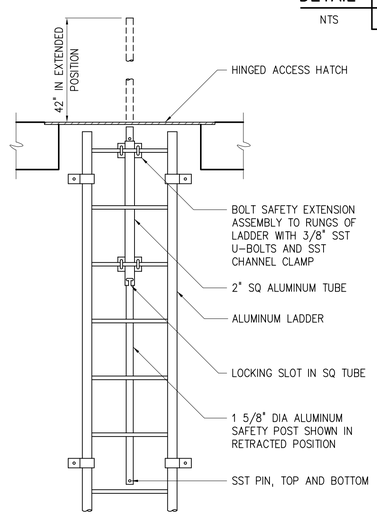

RETRACTABLE SAFETY EXTENSION

DETAIL 29
NTS –

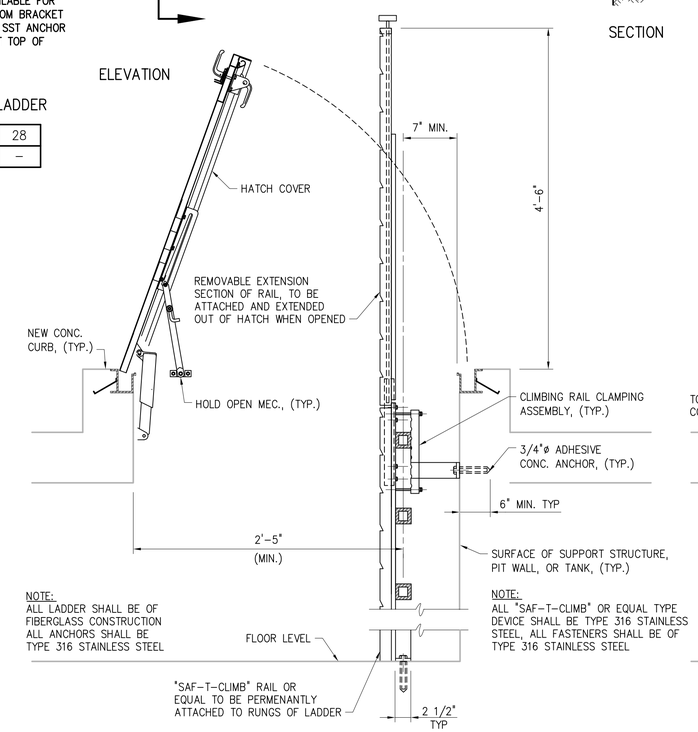

NOTE:
ALL LADDER SHALL BE OF FIBERGLASS CONSTRUCTION ALL ANCHORS SHALL BE TYPE 316 STAINLESS STEEL

NOTE:
ALL "SAF-T-CLIMB" OR EQUAL TYPE DEVICE SHALL BE TYPE 316 STAINLESS STEEL, ALL FASTENERS SHALL BE OF TYPE 316 STAINLESS STEEL

SIDE VIEW

SECTION A
NTS –

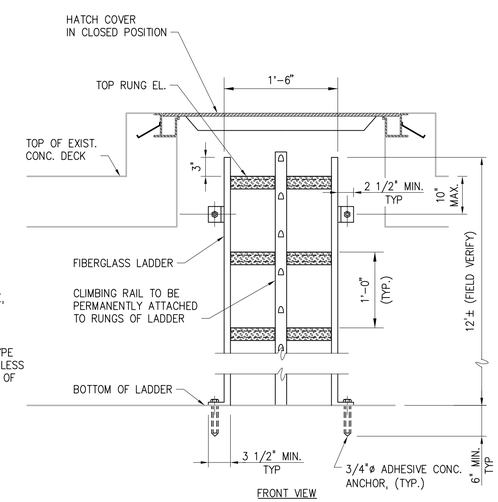

FRONT VIEW

DETAIL 31
NTS –

NO.	DATE	ISSUED FOR	BY
3	01/08	RECORD DRAWING	P.A.D.
2	10/03	BID SET	S.J.
1	10/03	BLDG. DEPT. REVISIONS	S.J.

DESIGNED H & S
DRAWN H & S
CHECKED S.J.
PROJ. ENGR. P.A.D.

SHAJAN JOYKUTTY P.E.
No. 43323

HAZEN AND SAWYER
Environmental Engineers & Scientists
4000 Hollywood Boulevard, Suite 750N
Hollywood, Florida 33021
Certificate of Authorization Number: 2771

SCALE N.T.S.

CONTRACT: –
CLIENTS PROJECT:
ENGINEERS PROJECT: 40406
CAD REFERENCE: 40406S26

CITY OF HALLANDALE BEACH
UTILITIES DEPARTMENT

6 MGD MEMBRANE SOFTENING W.T.P.

STRUCTURAL STANDARD DETAILS
SHEET 4

DATE: JANUARY 2008
SHEET: 89 OF 162
DRAWING: S-26

RECORD DRAWING

BY: AMEDINA
PLOT DATE: 2/6/2008 5:01 PM

XREFs= ..\TBLOCK\40406-TB,..\SDETAILS\0551000,..\SDETAILS\0665201R,..\SDETAILS\0551001R,..\SDETAILS\0551500R,..\SDETAILS\0551503R,..\SDETAILS\0665150R

File = O:\40406\40406-001\Drawings\STRU\40406S26 Saved by GDIAZ Save date = 1/30/2008 4:03 PM

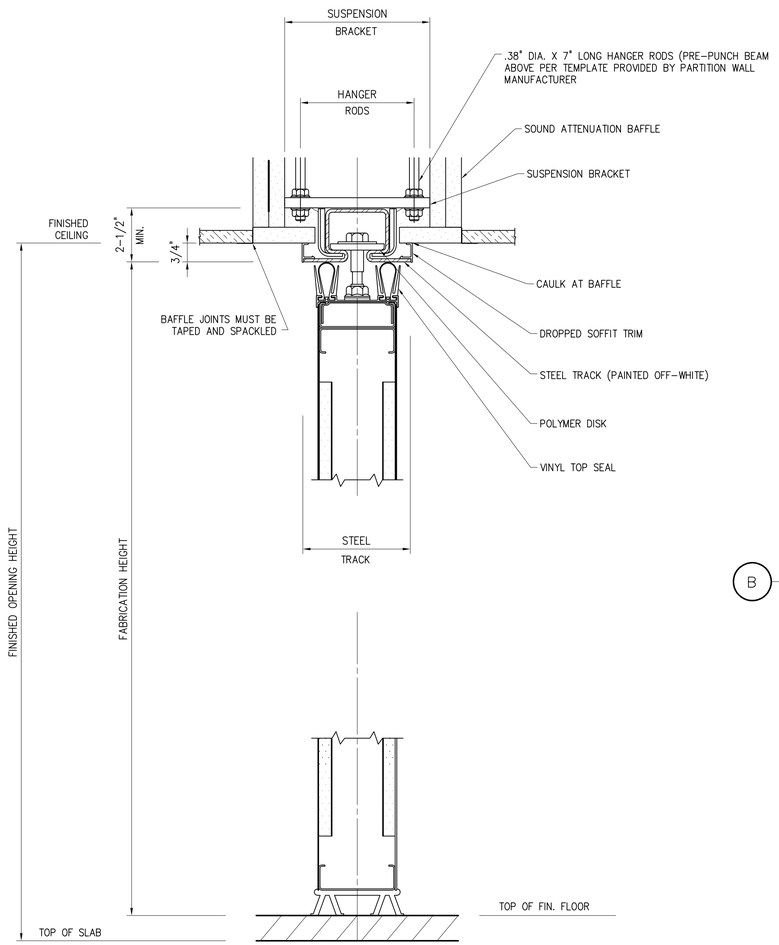

VERTICAL SECTION
PARTITION WALL TRACK SYSTEM

DETAIL 1
NTS –

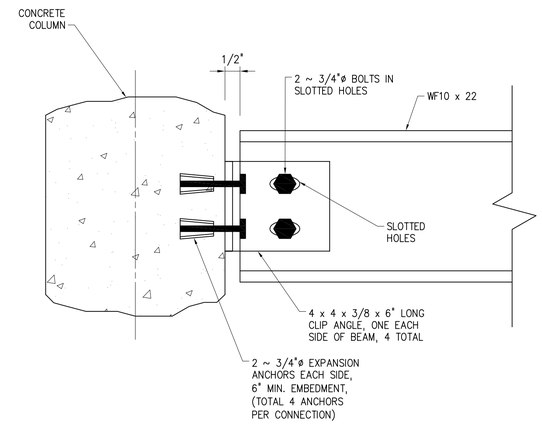

DETAIL 2
NTS –

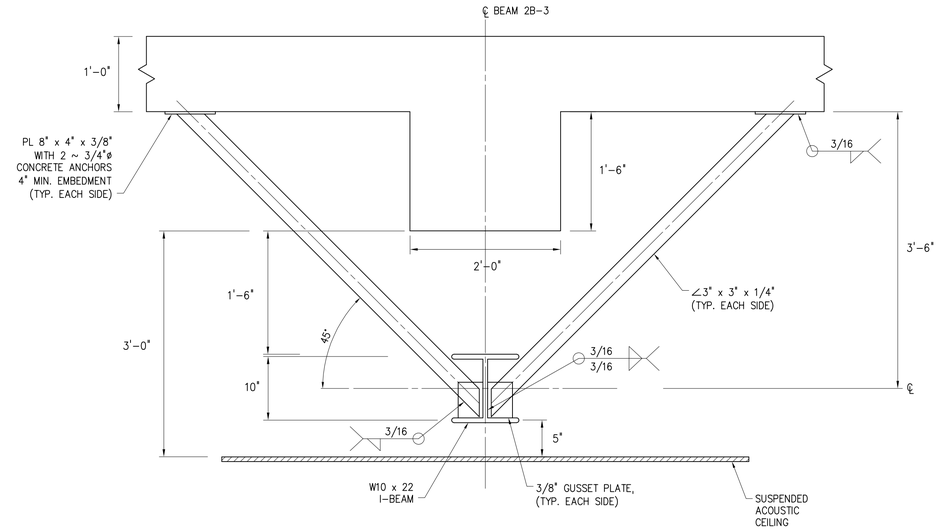

NOTE: CONTRACTOR MAY USE A BOLTED CONNECTION OF BRACE TO GUSSET.
IF BOLTED USE 2 ~ 3/4" DIA. BOLTS PER 2 x 2 x 3/8" ANGLE.

DETAIL 3
NTS –

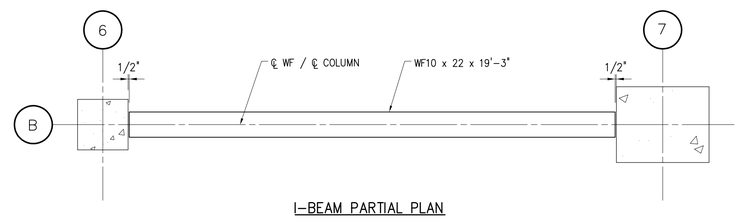

I-BEAM PARTIAL PLAN

NOTE: COORDINATE WITH THE BEAM FABRICATOR AND THE PARTITION WALL SUPPLIER FOR THE SIZE AND SPACING (i.e., TEMPLATE) OF HOLES IN THE I-BEAM BOTTOM FLANGE FOR THE SUSPENSION BRACKET HANGER RODS.

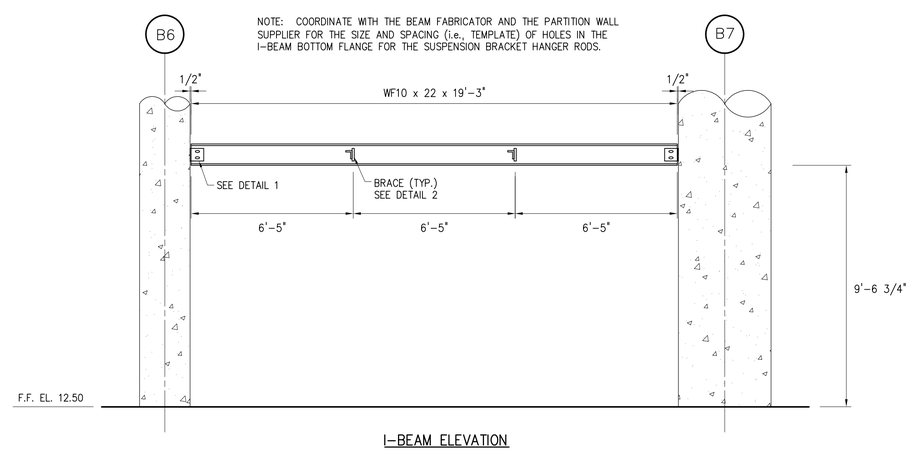

I-BEAM ELEVATION

FOLDABLE PARTITION DETAIL

DETAIL 4
NTS –

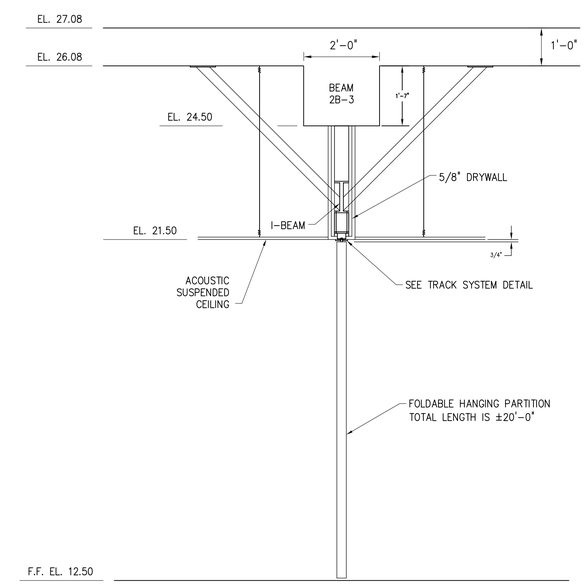

WALL SECTION

FOLDABLE PARTITION WALL

DETAIL 5
NTS –

NO.	DATE	ISSUED FOR	BY
4	01/08	RECORD DRAWING	P.A.D.
3	10/21/05	TRENCH MODIFICATION	S.J.
2	10/03	BID SET	S.J.
1	10/03	BLDG. DEPT. REVISIONS	S.J.

XREFs=

DESIGNED W.G.L.
DRAWN W.G.L.
CHECKED S.J.
PROJ. ENGR. P.A.D.

SHAJAN JOYKUTTY P.E.
No. 43323

HAZEN AND SAWYER
Environmental Engineers & Scientists
4000 Hollywood Boulevard, Suite 750N
Hollywood, Florida 33021
Certificate of Authorization Number: 2771

SCALE
AS NOTED

CONTRACT: –
CLIENTS PROJECT:
ENGINEERS PROJECT: 40406
CAD REFERENCE: 40406S27A

CITY OF HALLANDALE BEACH
UTILITIES DEPARTMENT

6 MGD MEMBRANE SOFTENING W.T.P.
STRUCTURAL STANDARD DETAILS
SHEET 5

DATE: JANUARY 2008
SHEET: – OF –
DRAWING: S-27

RECORD DRAWING

PLOT DATE: 2/8/2008 5:01 PM BY: AMEDINA

File = O:\40406\40406-001\Drawings\STRU\40406S27 Saved by NPENA Save date = 1/30/2008 4:27 PM

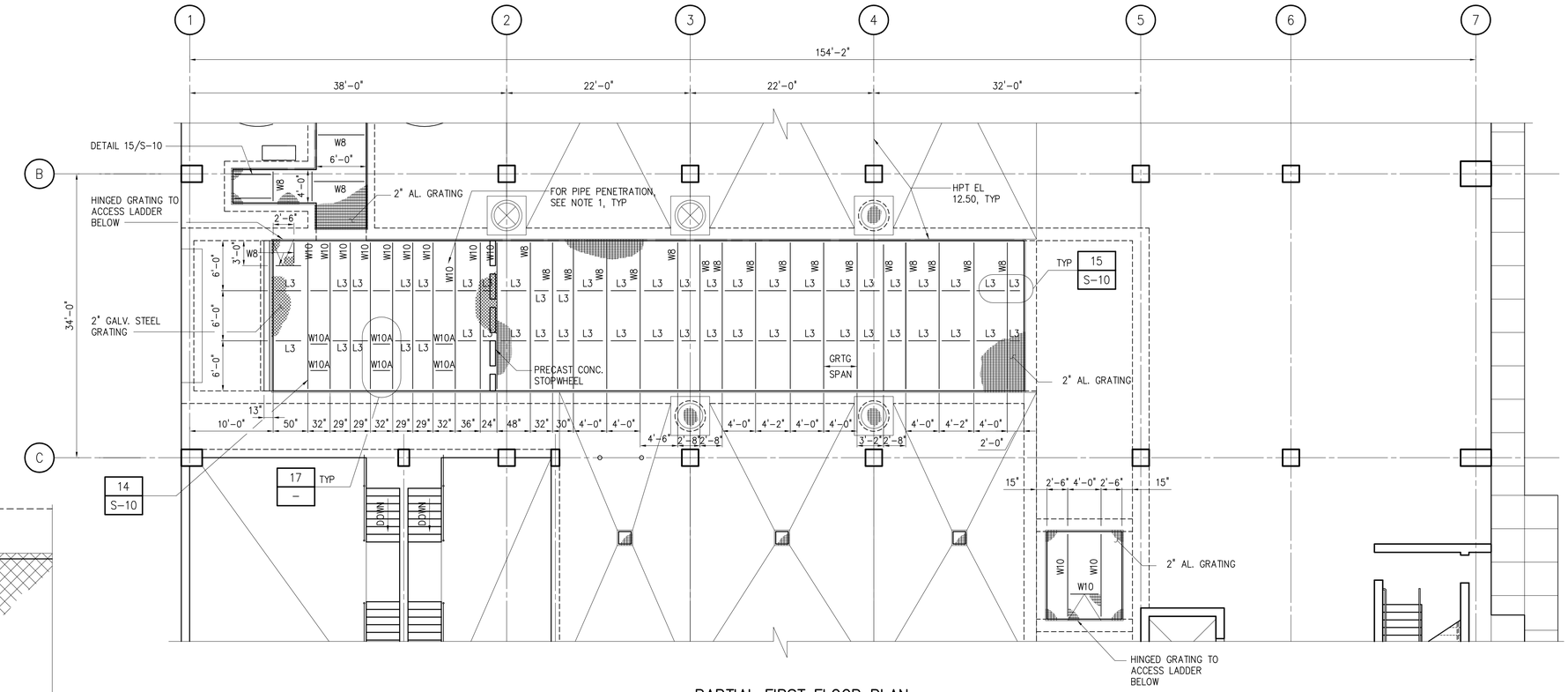

PARTIAL FIRST FLOOR PLAN

1/8"=1'-0"

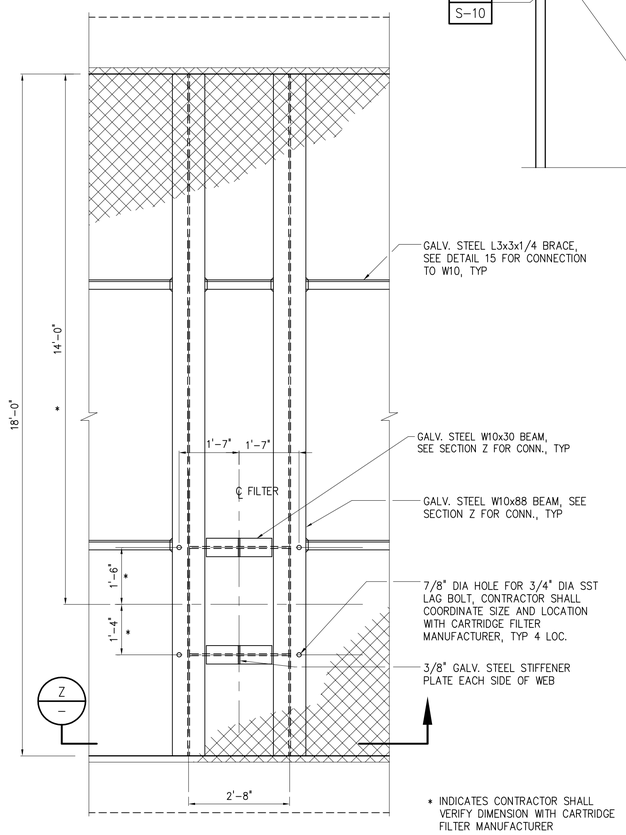

DETAIL 17 / –

1/2"=1'-0"

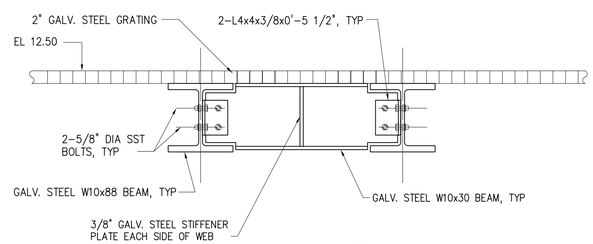

SECTION Z / –

1"=1'-0"

NOTES:

1. PRIOR TO FABRICATION OF GRATING AND GRATING SUPPORTS, CONTRACTOR SHALL VERIFY LOCATION OF ALL PIPE PENETRATIONS AND CARTRIDGE FILTERS TO ENSURE THERE ARE NO INTERFERENCES. PROVIDE BLOCKOUTS IN GRATING AS REQUIRED SO THAT THE CARTRIDGE FILTERS BEAR DIRECTLY ON FRAMING. CONTRACTOR SHALL SUBMIT ANY CHANGES TO THE FRAMING PLAN SHOWN ON THE DRAWINGS TO THE ENGINEER FOR APPROVAL.
2. W8 INDICATES W8x18 BEAM.
   W10 INDICATES W10x88 BEAM.
   L3 INDICATES L3x3x1/4 BRACE.
   W10A INDICATES W10x30 BEAM.
3. GRATING SHALL BE 2" x 3/16" GALV STEEL WELDED W-19-4 IN ACCORDANCE WITH ANSI/NAAMM MBG 531-00.
4. ALUMINUM GRATING SHALL BE 2" x 1/4" P-19-4.
5. ALL STEEL SHALL BE GALVANIZED STEEL.

1/8"=1'-0" 8 6 4 2 0 8'
1/2"=1'-0" 12" 0 1 3'
1"=1'-0" 12" 6 0 1'

NO.	DATE	ISSUED FOR	BY
4	01/08	RECORD DRAWING	P.A.D.
3	10/21/05	TRENCH MODIFICATION	S.J.
2	10/03	BID SET	S.J.
1	10/03	BLDG. DEPT. REVISIONS	S.J.

DESIGNED W.G.L.
DRAWN W.G.L.
CHECKED S.J.
PROJ. ENGR. P.A.D.

SHAJAN JOYKUTTY P.E.
No. 43323

HAZEN AND SAWYER
Environmental Engineers & Scientists
4000 Hollywood Boulevard, Suite 750N
Hollywood, Florida 33021
Certificate of Authorization Number: 2771

SCALE: AS NOTED

CONTRACT: –
CLIENTS PROJECT:
ENGINEERS PROJECT: 40406
CAD REFERENCE: 40406S27A

CITY OF HALLANDALE BEACH
UTILITIES DEPARTMENT

6 MGD MEMBRANE SOFTENING W.T.P.

NF PROCESS BUILDING
PARTIAL FIRST FLOOR PLAN

DATE: JANUARY 2008
SHEET: – OF –
DRAWING: S-27A

RECORD DRAWING

PLOT DATE: 2/8/2008 4:59 PM BY: AMPONA

XREFs= ..\200\PT-P1-SB,0:\40406\40406-001\Drawings\200\PT-P1-MB

File = O:\40406\40406-001\Drawings\STRU\40406S27A Saved by NPENA Save date = 1/30/2008 4:28 PM

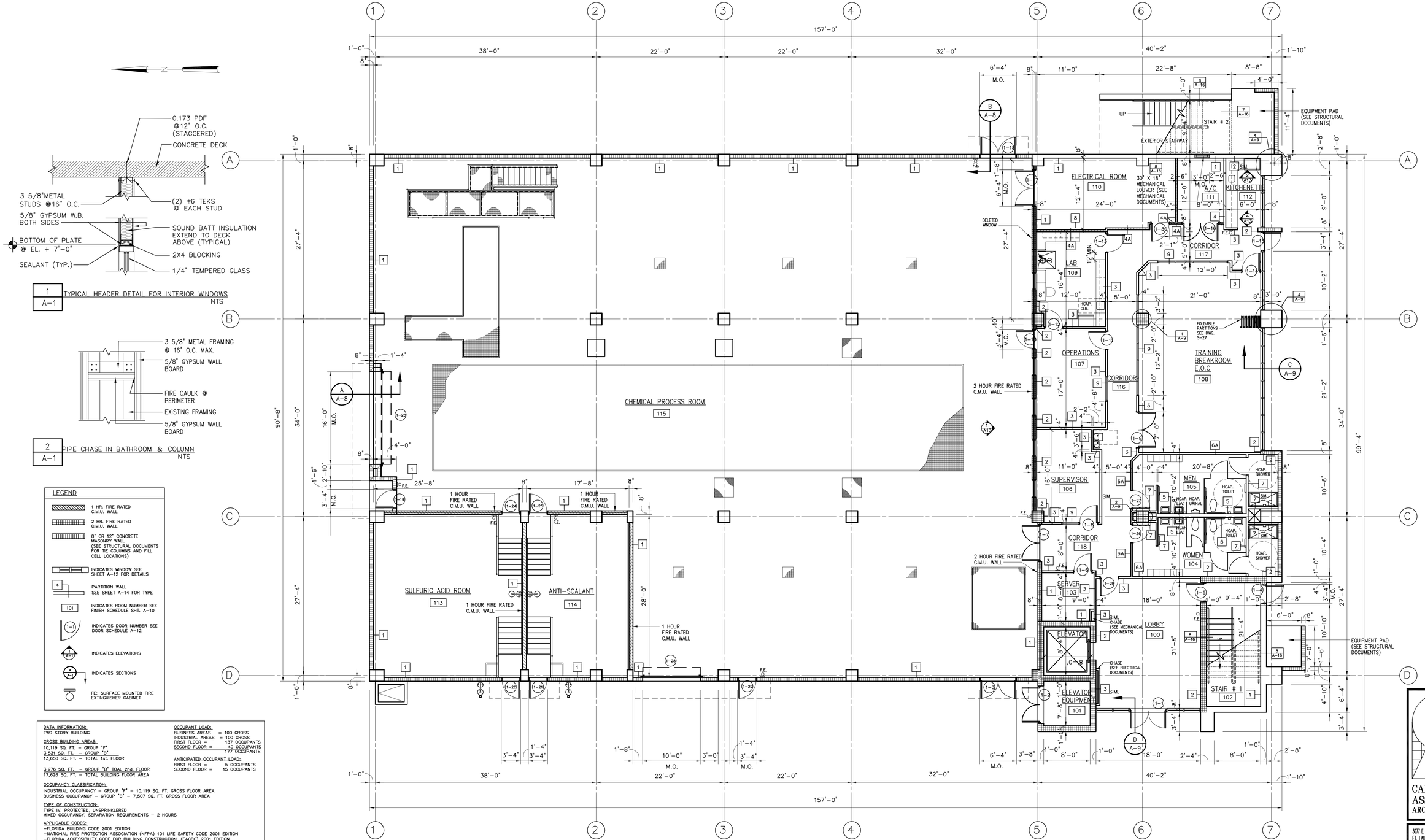

DATA INFORMATION:
TWO STORY BUILDING

GROSS BUILDING AREAS:
10,119 SQ. FT. – GROUP "F"
3,531 SQ. FT. – GROUP "B"
13,650 SQ. FT. – TOTAL 1st. FLOOR

3,976 SQ. FT. – GROUP "B" TOAL 2nd. FLOOR
17,626 SQ. FT. – TOTAL BUILDING FLOOR AREA

OCCUPANCY CLASSIFICATION:
INDUSTRIAL OCCUPANCY – GROUP "F" – 10,119 SQ. FT. GROSS FLOOR AREA
BUSINESS OCCUPANCY – GROUP "B" – 7,507 SQ. FT. GROSS FLOOR AREA

TYPE OF CONSTRUCTION:
TYPE IV, PROTECTED, UNSPRINKLERED
MIXED OCCUPANCY, SEPARATION REQUIREMENTS – 2 HOURS

APPLICABLE CODES:
–FLORIDA BUILDING CODE 2001 EDITION
–NATIONAL FIRE PROTECTION ASSOCIATION (NFPA) 101 LIFE SAFETY CODE 2001 EDITION
–FLORIDA ACCESSIBILITY CODE FOR BUILDING CONSTRUCTION, (FACBC) 2001 EDITION

FIRE RESISTANCE RATINGS:
ALL INTERIOR BEARING WALLS, COLUMNS, BEAMS, GIRDERS, FLOORS, EXTERIOR BEARING WALLS AND EXTERIOR NON BEARING WALLS SHALL BE 1 HOUR RATED.

OCCUPANT LOAD:
BUSINESS AREAS = 100 GROSS
INDUSTRIAL AREAS = 100 GROSS
FIRST FLOOR = 137 OCCUPANTS
SECOND FLOOR = 40 OCCUPANTS
177 OCCUPANTS

ANTICIPATED OCCUPANT LOAD:
FIRST FLOOR = 5 OCCUPANTS
SECOND FLOOR = 15 OCCUPANTS

FIRST FLOOR PLAN

1/8"=1'-0"

RECORD DRAWINGS

CARTAYA & ASSOCIATES ARCHITECTS P.A.
3077 E. COMMERCIAL BLVD. SUITE 201
FT. LAUDERDALE, FLORIDA 33308
771-2724 FAX 776-4280

1/8"=1'-0" 8 6 4 2 0 8'

NO.	DATE	ISSUED FOR	BY
1	01/08	RECORD DRAWINGS	M.C.

DESIGNED M.C.
DRAWN S.A.
CHECKED M.C.
PROJ. ENGR. M.C.

MARIO CARTAYA R.A.
No. AAC001388

HAZEN AND SAWYER
Environmental Engineers & Scientists
4000 Hollywood Boulevard, Suite 750N
Hollywood, Florida 33021
(954) 987-0066

SCALE 1/8" = 1'-0"

CONTRACT: –
CLIENTS PROJECT:
ENGINEERS PROJECT: 40406
CAD REFERENCE: 40406A-01

CITY OF HALLANDALE BEACH
UTILITIES DEPARTMENT

6 MGD MEMBRANE SOFTENING W.T.P.

NF PROCESS BUILDING

FIRST FLOOR PLAN

DATE: JANUARY 2008
SHEET: 90 OF 162
DRAWING: A-1

PLOT DATE: 2/5/2008 4:38 PM BY: AMEDINA

XREFs= O:\40406\40406-001\Drawings\200\PT-P1-AB

File = O:\40406\40406-001\Drawings\ARCH\40406A01 Saved by ---- Save date = 2/5/2008 8:45 AM

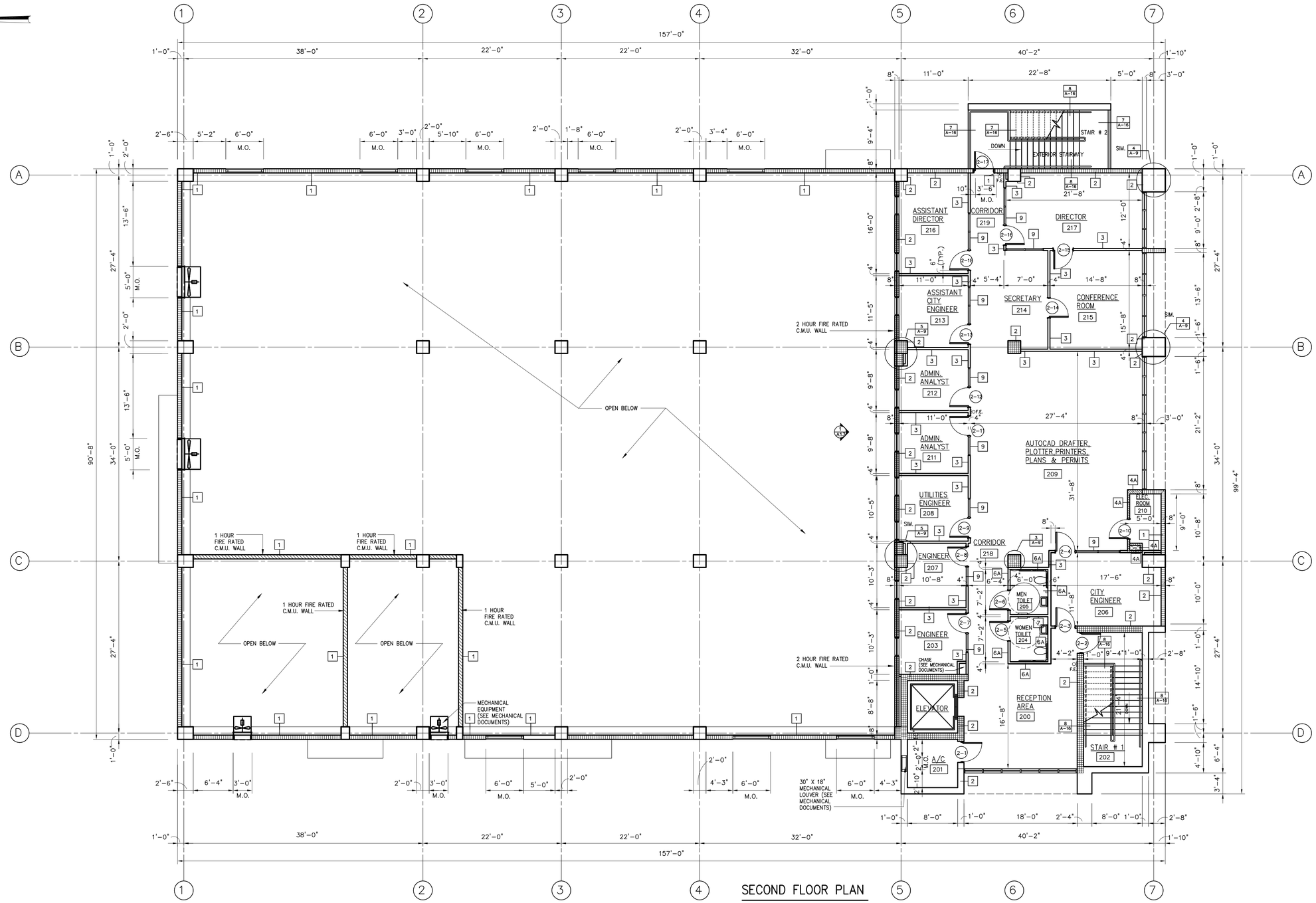

SECOND FLOOR PLAN

1/8"=1'-0"

1/8"=1'-0"

8 6 4 2 0 8'

RECORD DRAWINGS

CARTAYA & ASSOCIATES ARCHITECTS P.A.

3077 E. COMMERCIAL BLVD. SUITE 201
FT. LAUDERDALE, FLORIDA 33308
771-2724 FAX 776-4280

NO.	DATE	ISSUED FOR	BY
1	01/08	RECORD DRAWINGS	M.C.

DESIGNED M.C.
DRAWN S.A.
CHECKED M.C.
PROJ. ENGR. M.C.

MARIO CARTAYA R.A.
No. AAC001388

HAZEN AND SAWYER
Environmental Engineers & Scientists
4000 Hollywood Boulevard, Suite 750N
Hollywood, Florida 33021
(954) 987-0066

SCALE 1/8" = 1'-0"

CONTRACT: –
CLIENTS PROJECT:
ENGINEERS PROJECT: 40406
CAD REFERENCE: 40406A02

CITY OF HALLANDALE BEACH
UTILITIES DEPARTMENT

6 MGD MEMBRANE SOFTENING W.T.P.

NF PROCESS BUILDING

SECOND FLOOR PLAN

DATE: JANUARY 2008
SHEET: 91 OF 162
DRAWING: A-2

PLOT DATE: 2/8/2008 4:38 PM BY: AMEDINA

XREFs= O:\40406\40406-001\Drawings\200\PT-P2-AB

File = O:\40406\40406-001\Drawings\ARCH\40406A02 Saved by ---- Save date = 2/5/2008 8:44 AM

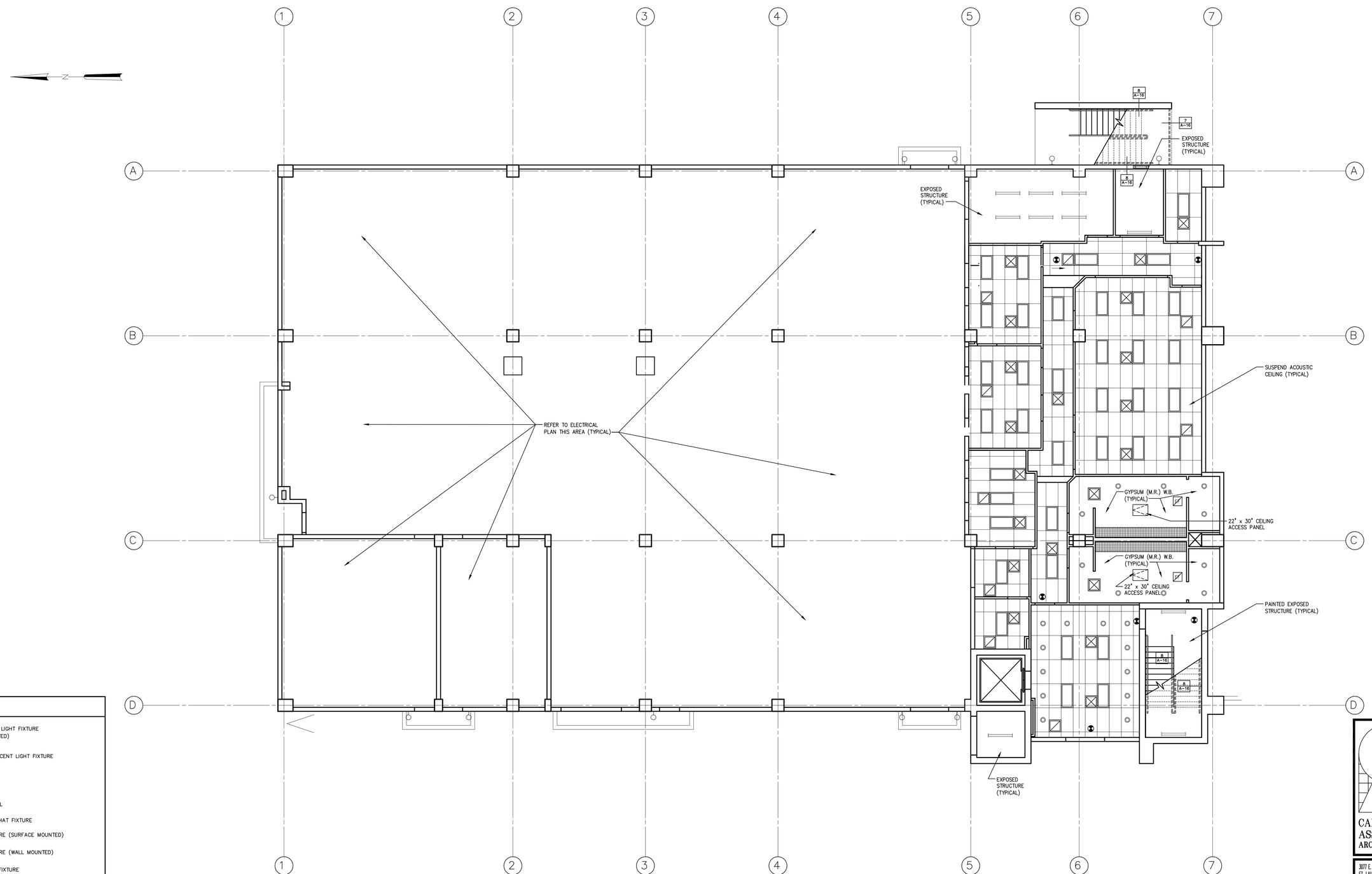

RECORD DRAWINGS

LEGEND

- 4' FLUORESCENT LIGHT FIXTURE (SURFACE MOUNTED)
- 4' X 2' FLUORESCENT LIGHT FIXTURE
- A/C REGISTER
- RETURN AIR GRILL
- RECESSED HIGH HAT FIXTURE
- EXIT LIGHT FIXTURE (SURFACE MOUNTED)
- EXIT LIGHT FIXTURE (WALL MOUNTED)
- EXTERIOR LIGHT FIXTURE

NOTES:
1. COORDINATE WITH MECHANICAL, ELECTRICAL AND PLUMBING DOCUMENTS. LOCATION OF FIXTURES AT THIS SHEET DOMINATE OVER LOCATION SHOWN ON MECHANICAL, ELECTRICAL & PLUMBING DOCUMENTS.

FIRST FLOOR REFLECTED CEILING PLAN

1/8"=1'-0"

1/8"=1'-0" 8 6 4 2 0 8'

CARTAYA & ASSOCIATES ARCHITECTS P.A.
3077 E. COMMERCIAL BLVD. SUITE 201
FT. LAUDERDALE, FLORIDA 33308
771-2724 FAX 776-4280

NO.	DATE	ISSUED FOR	BY
1	01/08	RECORD DRAWINGS	M.C.

DESIGNED M.C.
DRAWN S.A.
CHECKED M.C.
PROJ. ENGR. M.C.

MARIO CARTAYA R.A.
No. AAC001388

HAZEN AND SAWYER
Environmental Engineers & Scientists
4000 Hollywood Boulevard, Suite 750N
Hollywood, Florida 33021
(954) 987-0066

SCALE 1/8" = 1'-0"

CONTRACT: –
CLIENTS PROJECT:
ENGINEERS PROJECT: 40406
CAD REFERENCE: 40406A03

CITY OF HALLANDALE BEACH
UTILITIES DEPARTMENT

6 MGD MEMBRANE SOFTENING W.T.P.

NF PROCESS BUILDING
FIRST FLOOR
REFLECTED CEILING PLAN

DATE: JANUARY 2008
SHEET: 92 OF 162
DRAWING: A-3

PLOT DATE: 2/6/2008 4:38 PM BY: AMEDINA

XREFs= O:\40406\40406-001\Drawings\200\P1-P1-AB

File = O:\40406\40406-001\Drawings\ARCH\40406A03 Saved by ---- Save date = 2/5/2008 8:45 AM

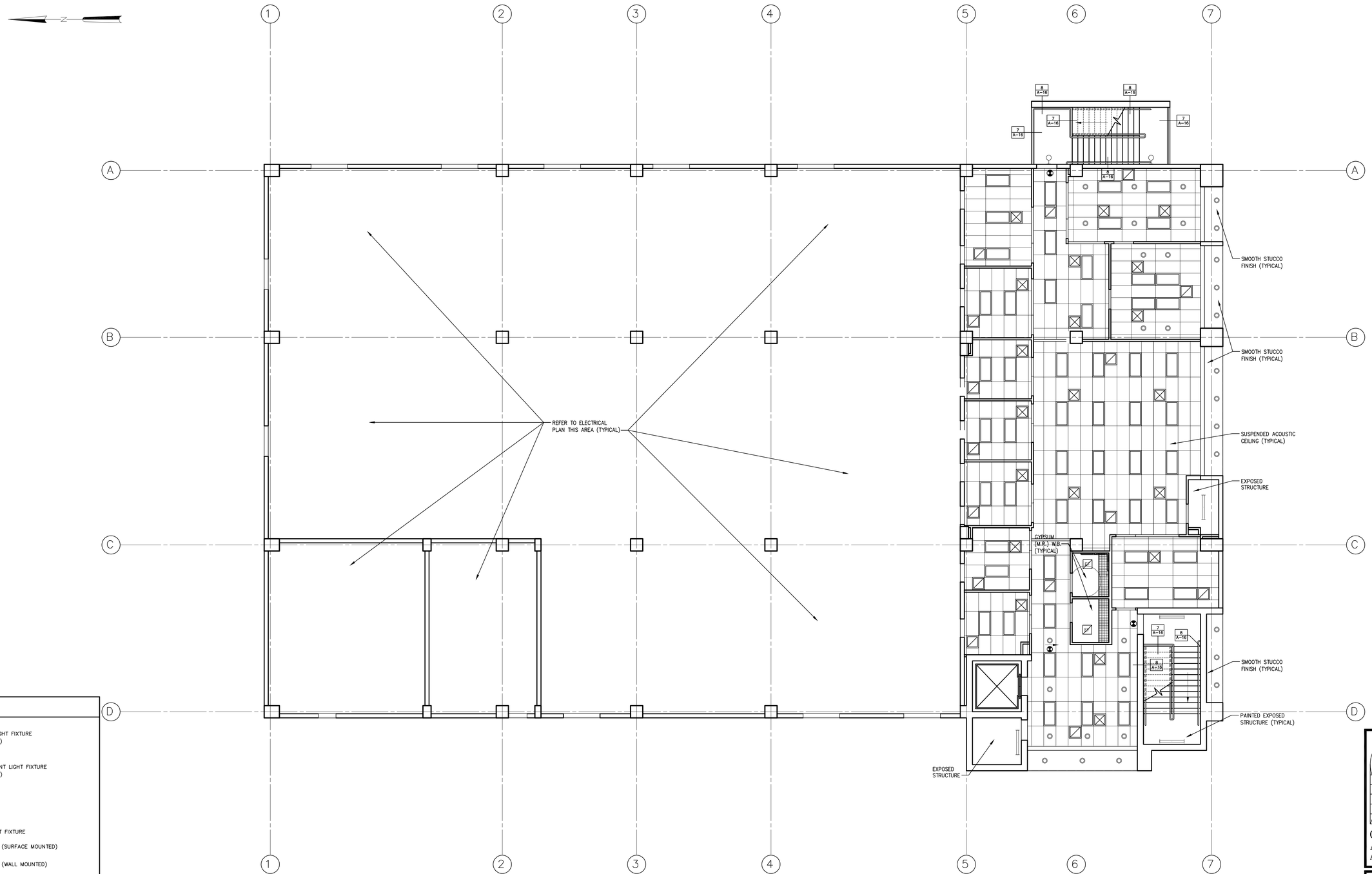

LEGEND

- 4' FLUORESCENT LIGHT FIXTURE (SURFACE MOUNTED)
- 4' X 2' FLUORESCENT LIGHT FIXTURE (SURFACE MOUNTED)
- A/C REGISTER
- RETURN AIR GRILL
- RECESSED HIGH HAT FIXTURE
- EXIT LIGHT FIXTURE (SURFACE MOUNTED)
- EXIT LIGHT FIXTURE (WALL MOUNTED)
- EXTERIOR LIGHT FIXTURE

NOTES: 1. COORDINATE WITH MECHANICAL, ELECTRICAL AND PLUMBING DOCUMENTS. LOCATION OF FIXTURES AT THIS SHEET DOMINATE OVER LOCATION SHOWN ON MECHANICAL, ELECTRICAL & PLUMBING DOCUMENTS.

SECOND FLOOR REFLECTED CEILING PLAN

1/8"=1'-0"

1/8"=1'-0" 8 6 4 2 0 8'

RECORD DRAWINGS

CARTAYA & ASSOCIATES ARCHITECTS P.A.
3077 E. COMMERCIAL BLVD. SUITE 201
FT. LAUDERDALE, FLORIDA 33308
771-2724 FAX 776-4280

NO.	DATE	ISSUED FOR	BY
1	01/08	RECORD DRAWINGS	M.C.

DESIGNED M.C.
DRAWN S.A.
CHECKED M.C.
PROJ. ENGR. M.C.

MARIO CARTAYA R.A.
No. AAC001388

HAZEN AND SAWYER
Environmental Engineers & Scientists
4000 Hollywood Boulevard, Suite 750N
Hollywood, Florida 33021
(954) 987-0066

SCALE 1/8" = 1'-0"

CONTRACT: –
CLIENTS PROJECT:
ENGINEERS PROJECT: 40406
CAD REFERENCE: 40406A04

CITY OF HALLANDALE BEACH
City of Choice
CITY OF HALLANDALE BEACH
UTILITIES DEPARTMENT

6 MGD MEMBRANE SOFTENING W.T.P.

NF PROCESS BUILDING
SECOND FLOOR
REFLECTED CEILING PLAN

DATE: JANUARY 2008
SHEET: 93 OF 162
DRAWING: A-4

PLOT DATE: 2/6/2008 4:35 PM BY: AMEDINA

XREFs= O:\40406\40406-001\Drawings\200\PT-P2-AB

File = O:\40406\40406-001\Drawings\ARCH\40406A04 Saved by ---- Save date = 2/5/2008 8:46 AM

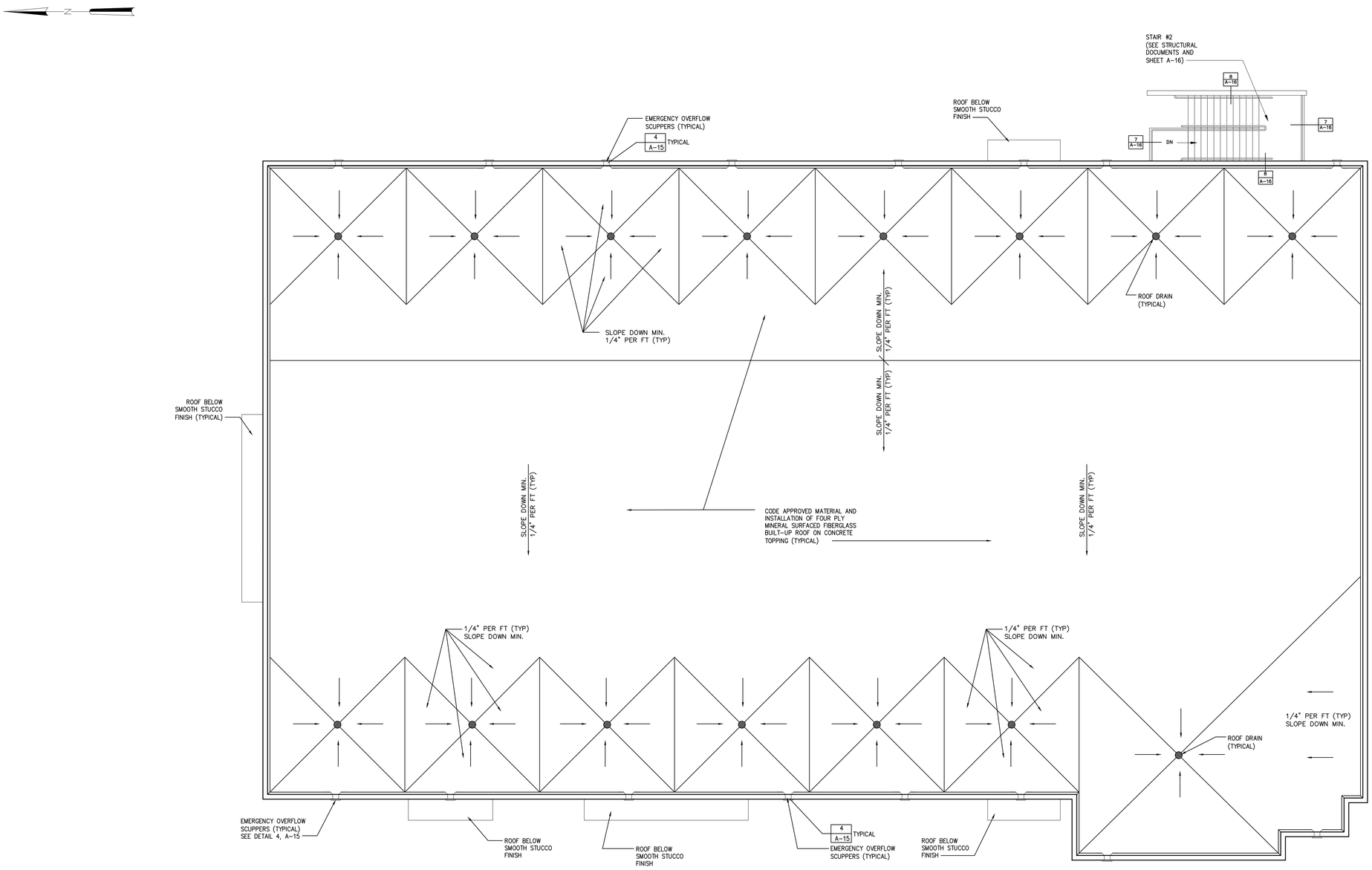

ROOF PLAN

1/8"=1'-0"

RECORD DRAWINGS

CARTAYA & ASSOCIATES ARCHITECTS P.A.

3077 E. COMMERCIAL BLVD. SUITE 201
FT. LAUDERDALE, FLORIDA 33308
771-2724 FAX 776-4280

1/8"=1'-0" 8 6 4 2 0 8'

NO.	DATE	ISSUED FOR	BY
1	01/08	RECORD DRAWINGS	M.C.

DESIGNED M.C.
DRAWN S.A.
CHECKED M.C.
PROJ. ENGR. M.C.

MARIO CARTAYA R.A.
No. AAC001388

HAZEN AND SAWYER
Environmental Engineers & Scientists
4000 Hollywood Boulevard, Suite 750N
Hollywood, Florida 33021
(954) 987-0066

SCALE 1/8" = 1'-0"

CONTRACT: –
CLIENTS PROJECT:
ENGINEERS PROJECT: 40406
CAD REFERENCE: 40406A05

CITY OF HALLANDALE BEACH
UTILITIES DEPARTMENT

6 MGD MEMBRANE SOFTENING W.T.P.

NF PROCESS BUILDING

ROOF PLAN

DATE: JANUARY 2008
SHEET: 94 OF 162
DRAWING: A-5

PLOT DATE: 2/6/2008 4:39 PM BY: AMEDINA

XREFs= O:\40406\40406-001\Drawings\200\PT-PR-AB

File = O:\40406\40406-001\Drawings\ARCH\40406A05 Saved by CARTAYA09 Save date = 2/5/2008 8:46 AM

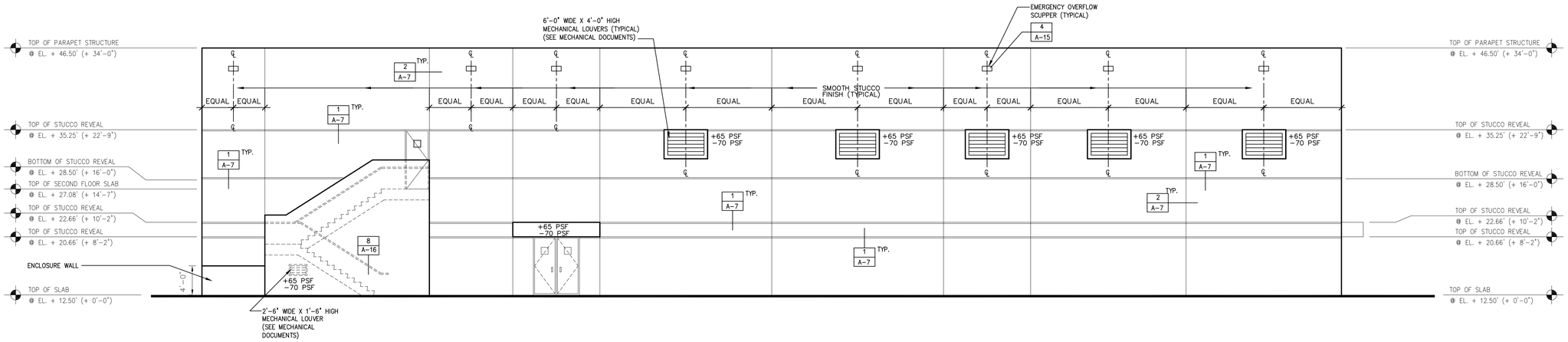

EAST ELEVATION

1/8"=1'-0"

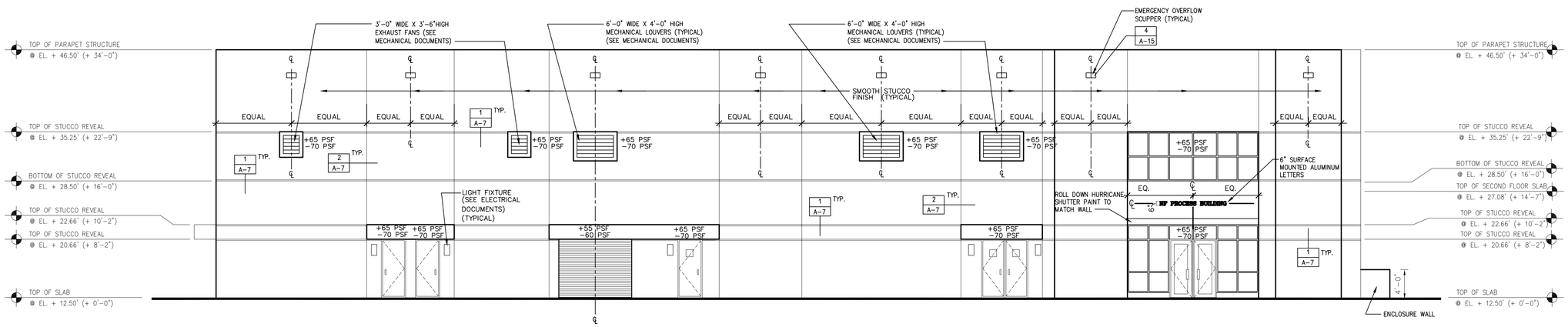

WEST ELEVATION

1/8"=1'-0"

RECORD DRAWINGS

CARTAYA & ASSOCIATES ARCHITECTS P.A.

3077 E. COMMERCIAL BLVD. SUITE 201
FT. LAUDERDALE, FLORIDA 33308
771-2724 FAX 776-4280

1/8"=1'-0" 8 6 4 2 0 8'

NO.	DATE	ISSUED FOR	BY
1	01/08	RECORD DRAWINGS	M.C.

DESIGNED M.C.
DRAWN S.A.
CHECKED M.C.
PROJ. ENGR. M.C.

MARIO CARTAYA R.A.
No. AAC001388

HAZEN AND SAWYER
Environmental Engineers & Scientists
4000 Hollywood Boulevard, Suite 750N
Hollywood, Florida 33021
(954) 987-0066

SCALE 1/8" = 1'-0"

CONTRACT: –
CLIENTS PROJECT:
ENGINEERS PROJECT: 40406
CAD REFERENCE: 40406A06

CITY OF HALLANDALE BEACH
City of Choice
CITY OF HALLANDALE BEACH
UTILITIES DEPARTMENT

6 MGD MEMBRANE SOFTENING W.T.P.

NF PROCESS BUILDING

EAST AND WEST ELEVATIONS

DATE: JANUARY 2008
SHEET: 95 OF 162
DRAWING: A-6

PLOT DATE: 2/6/2008 4:39 PM BY: AMEDINA

XREFs= ..\200\PT-PR-AB,..\200\PT-P1-AB,..\200\PT-P2-AB

File = O:\40406\40406-001\Drawings\ARCH\40406A06 Saved by CARTAYA09 Save date = 2/5/2008 8:50 AM

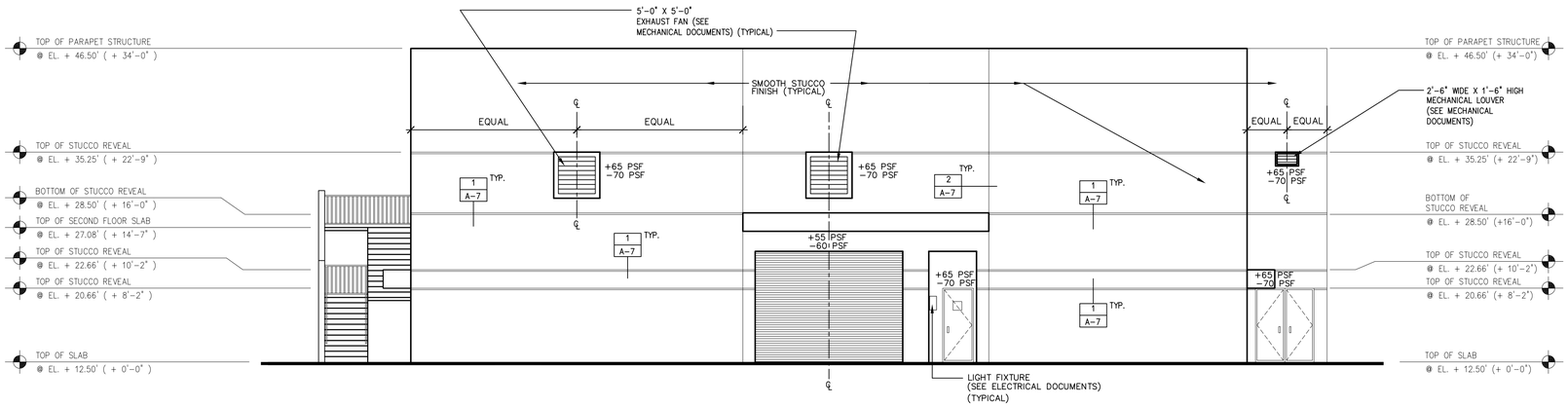

NORTH ELEVATION

1/8"=1'-0"

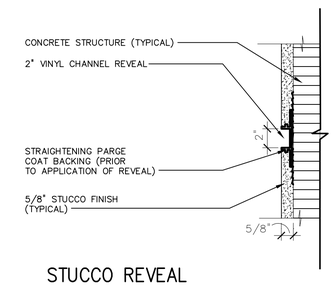

STUCCO REVEAL

NOT TO SCALE

1 / A-7

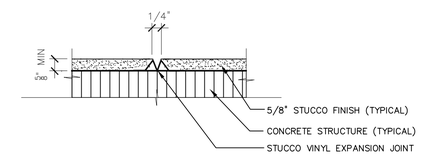

STUCCO EXPANSION JOINT

NOT TO SCALE

2 / A-7

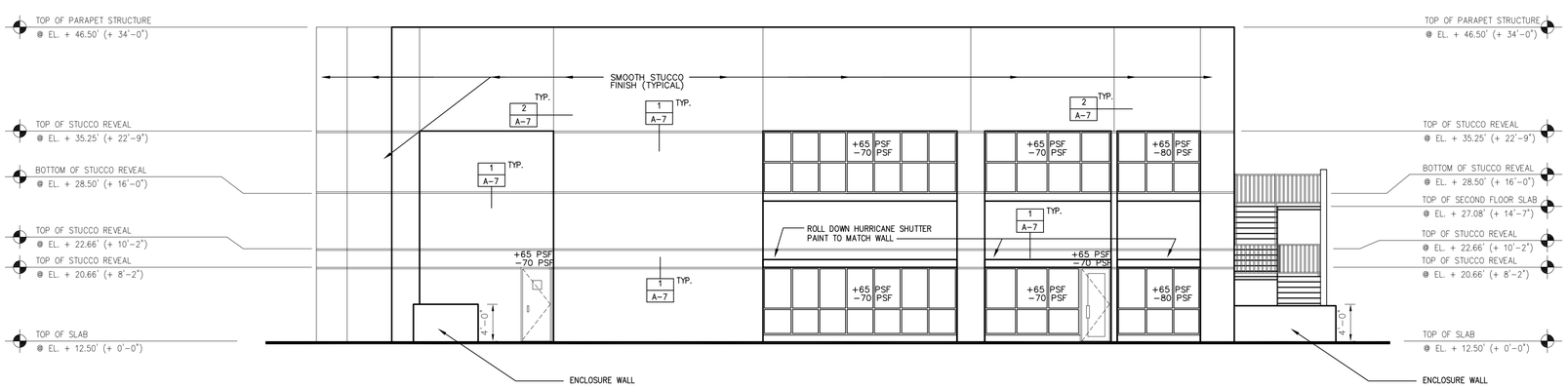

SOUTH ELEVATION

1/8"=1'-0"

RECORD DRAWINGS

CARTAYA & ASSOCIATES ARCHITECTS P.A.

3077 E. COMMERCIAL BLVD. SUITE 201
FT. LAUDERDALE, FLORIDA 33308
771-2724 FAX 776-4280

1/8"=1'-0" 8 6 4 2 0 8'

NO.	DATE	ISSUED FOR	BY
1	01/08	RECORD DRAWINGS	M.C.

DESIGNED M.C.
DRAWN S.A.
CHECKED M.C.
PROJ. ENGR. M.C.

MARIO CARTAYA R.A.
No. AAC001388

HAZEN AND SAWYER
Environmental Engineers & Scientists
4000 Hollywood Boulevard, Suite 750N
Hollywood, Florida 33021
(954) 987-0066

SCALE 1/8" = 1'-0"

CONTRACT: –
CLIENTS PROJECT:
ENGINEERS PROJECT: 40406
CAD REFERENCE: 40406A07

CITY OF HALLANDALE BEACH
City of Choice
CITY OF HALLANDALE BEACH
UTILITIES DEPARTMENT

6 MGD MEMBRANE SOFTENING W.T.P.

NF PROCESS BUILDING

NORTH AND SOUTH ELEVATIONS

DATE: JANUARY 2008
SHEET: 96 OF 162
DRAWING: A-7

PLOT DATE: 2/8/2008 4:40 PM BY: AMEDINA

XREFs= ..\200\PT-P2-AB,..\200\PT-P1-AB

File = O:\40406\40406-001\Drawings\ARCH\40406A07 Saved by CARTAYA09 Save date = 2/5/2008 8:51 AM

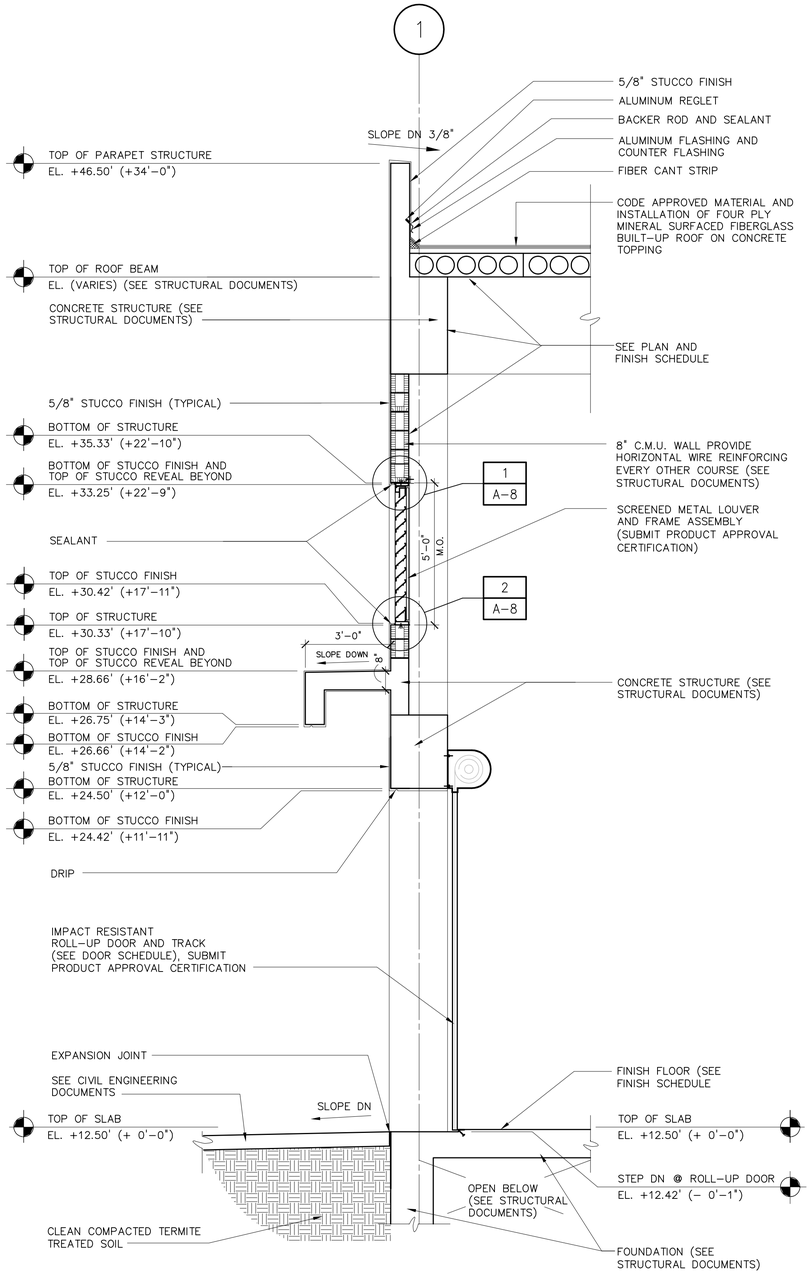

WALL SECTION A/A-8
3/8"=1'-0"

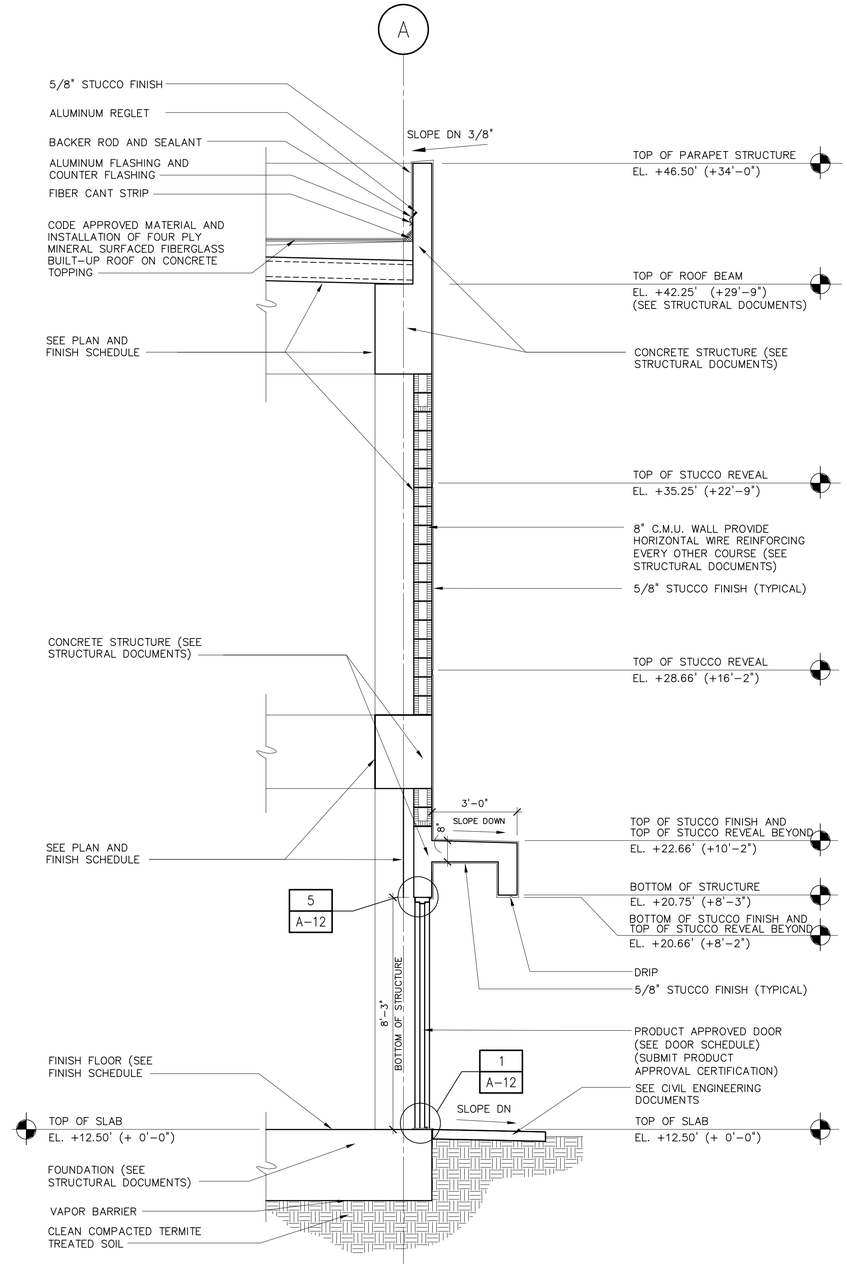

WALL SECTION B/A-8
3/8"=1'-0"

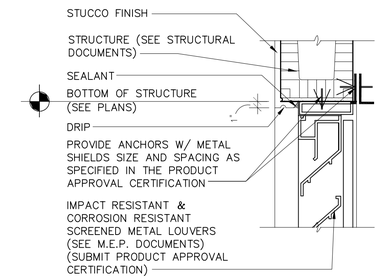

LOUVER HEAD DETAIL 1/A-8
1 1/2" = 1'-0"

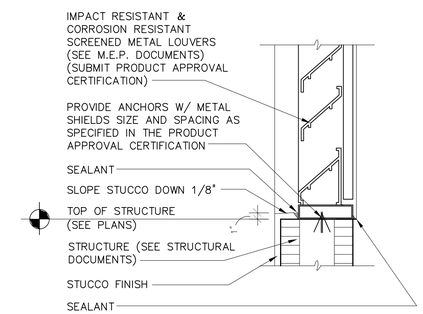

LOUVER SILL DETAIL 2/A-8
1 1/2" = 1'-0"

RECORD DRAWINGS

CARTAYA & ASSOCIATES ARCHITECTS P.A.
3077 E. COMMERCIAL BLVD. SUITE 201
FT. LAUDERDALE, FLORIDA 33308
771-2724 FAX 776-4280

NO.	DATE	ISSUED FOR	BY
1	01/08	RECORD DRAWINGS	M.C.

DESIGNED M.C.
DRAWN S.A.
CHECKED M.C.
PROJ. ENGR. M.C.

MARIO CARTAYA R.A.
No. AAC001388

HAZEN AND SAWYER
Environmental Engineers & Scientists
4000 Hollywood Boulevard, Suite 750N
Hollywood, Florida 33021
(954) 987-0066

SCALE 3/8" = 1'-0"

CONTRACT: –
CLIENTS PROJECT:
ENGINEERS PROJECT: 40406
CAD REFERENCE: 40406A06

CITY OF HALLANDALE BEACH
UTILITIES DEPARTMENT

6 MGD MEMBRANE SOFTENING W.T.P.
NF PROCESS BUILDING
WALL SECTIONS

DATE: JANUARY 2008
SHEET: 97 OF 162
DRAWING: A-8

PLOT DATE: 2/5/2008 4:40 PM BY: AMEDINA
XREFs= O:\40406\40406-001\Drawings\200\0138_XBASE_WS
File = O:\40406\40406-001\Drawings\ARCH\40406A08 Saved by CARTAYA09 Save date = 2/5/2008 8:56 AM

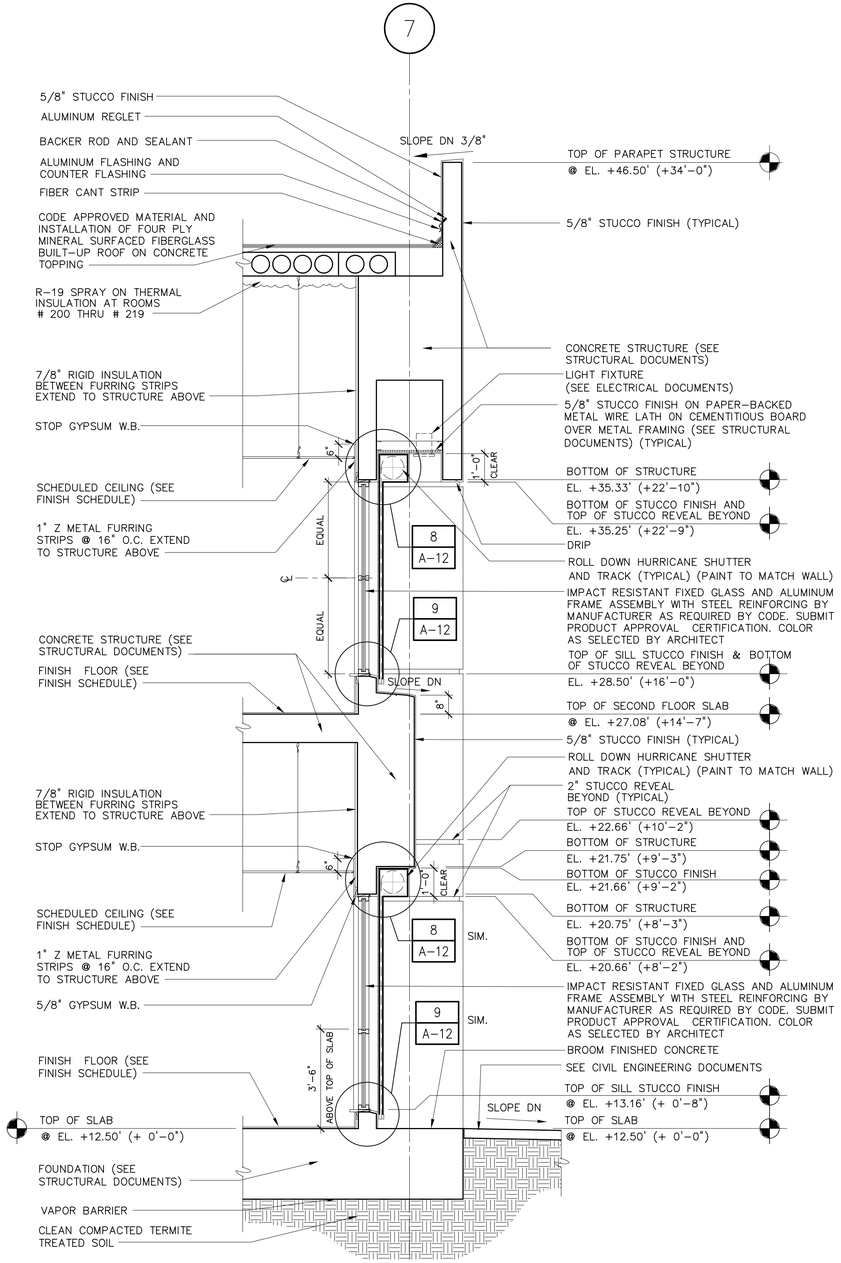

WALL SECTION C/A-9
3/8"=1'-0"

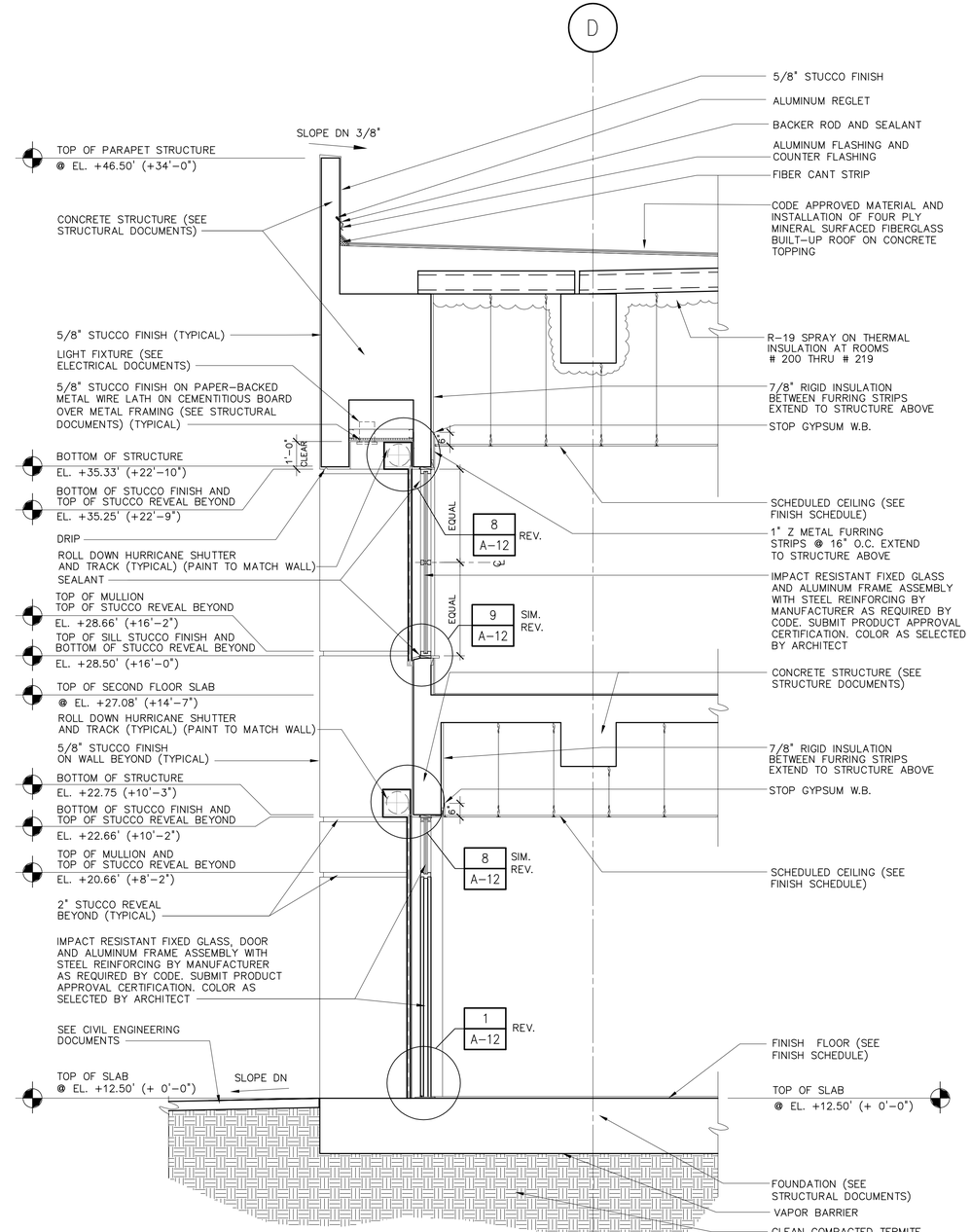

WALL SECTION D/A-9
3/8"=1'-0"

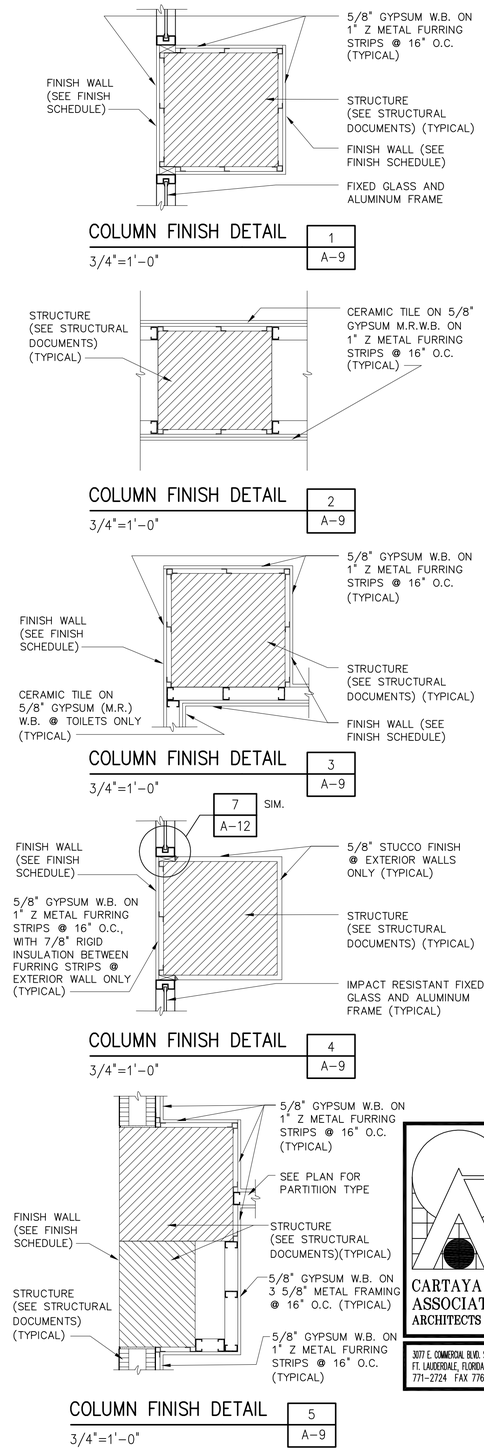

RECORD DRAWINGS

CARTAYA & ASSOCIATES ARCHITECTS P.A.
3077 E. COMMERCIAL BLVD. SUITE 201
FT. LAUDERDALE, FLORIDA 33308
771-2724 FAX 776-4280

NO.	DATE	ISSUED FOR	BY
1	01/08	RECORD DRAWINGS	M.C.

DESIGNED M.C.
DRAWN S.A.
CHECKED M.C.
PROJ. ENGR. M.C.

MARIO CARTAYA R.A.
No. AAC001388

HAZEN AND SAWYER
Environmental Engineers & Scientists
4000 Hollywood Boulevard, Suite 750N
Hollywood, Florida 33021
(954) 987-0066

SCALE 3/8" = 1'-0"

CONTRACT: –
CLIENTS PROJECT:
ENGINEERS PROJECT: 40406
CAD REFERENCE: 40406A06

CITY OF HALLANDALE BEACH
City of Choice
CITY OF HALLANDALE BEACH
UTILITIES DEPARTMENT

6 MGD MEMBRANE SOFTENING W.T.P.

NF PROCESS BUILDING

WALL SECTIONS

DATE: JANUARY 2008
SHEET: 98 OF 162
DRAWING: A-9

PLOT DATE: 2/8/2008 4:40 PM BY: AMEDINA

XREFs= O:\40406\40406-001\Drawings\200\0138_XBASE_WS

File = O:\40406\40406-001\Drawings\ARCH\40406A09 Saved by ---- Save date = 2/5/2008 8:58 AM

FINISH SCHEDULE

	NO.	ROOM	FLOOR	BASE	WALL	CEILING	CLG HIGH	REMARKS
NF PROCESS BUILDING FIRST FLOOR	100	LOBBY	VINYL TILE	VINYL	PAINT ON GYPSUM W.B.	ACOUSTIC CEILING	10'-2"	
	101	ELEVATOR EQUIPMENT	SEALED CONC.	NONE	PAINT ON BLOCK WALL AND CONCRETE	PAINT ON EXP. STRUCTURE	EXP. STR.	
	102	STAIR #1	SEALED CONC.	NONE	PAINT ON BLOCK WALL AND CONCRETE	PAINT ON EXP. STRUCTURE	EXP. STR.	
	103	SERVER	VINYL TILE	VINYL	PAINT ON GYPSUM W.B.	ACOUSTIC CEILING	9'-0"	
	104	WOMENS TOILET	CERAMIC TILE	CER. TILE COVE	CERAMIC TILE ON GYPSUM W.B. (MOISTURE RESISTANT)	EPOXY PAINT ON GYPSUM W.B. (MOISTURE RESISTANT)	9'-0"	
	105	MENS TOILET	CERAMIC TILE	CER. TILE COVE	CERAMIC TILE ON GYPSUM W.B. (MOISTURE RESISTANT)	EPOXY PAINT ON GYPSUM W.B. (MOISTURE RESISTANT)	9'-0"	
	106	SUPERVISOR	VINYL TILE	VINYL	PAINT ON GYPSUM W.B.	ACOUSTIC CEILING	9'-0"	
	107	OPERATIONS	VINYL TILE	VINYL	PAINT ON GYPSUM W.B.	ACOUSTIC CEILING	9'-0"	
	108	TRAINING BREAKROOM E.O.C.	CARPET	VINYL	PAINT ON GYPSUM W.B.	ACOUSTIC CEILING	9'-0"	
	109	LAB	VINYL TILE	VINYL	PAINT ON GYPSUM W.B.	ACOUSTIC CEILING	9'-0"	
	110	ELECTRICAL ROOM	SEALED CONC.	NONE	EPOXY PAINT ON BLOCK WALL AND CONCRETE AND GYPSUM W.B.	EPOXY PAINT ON EXP. STR.	EXP. STR.	
	111	A/C	SEALED CONC.	NONE	EPOXY PAINT ON BLOCK WALL AND CONCRETE AND GYPSUM W.B.	EXP. STRUCTURE	EXP. STR.	
	112	KITCHENETTE	CERAMIC TILE	CER. TILE COVE	PAINT ON GYPSUM W.B.	ACOUSTIC CEILING	9'-0"	* CULTURED MARBLE THERSHOLD @ ENTRANCE
	113	SULFURIC ACID ROOM	–	–	–	–	EXP. STR.	
	114	ANTI-SCALANT ROOM	–	–	–	–	EXP. STR.	
	115	CHEMICAL PROCESS ROOM	SEALED CONC.	NONE	EPOXY PAINT ON BLOCK WALL AND CONCRETE AND COLUMNS	EPOXY PAINT ON EXP. STRUCTURE	EXP. STR.	
	116	CORRIDOR	VINYL TILE	VINYL	PAINT ON GYPSUM W.B.	ACOUSTIC CEILING	9'-0"	
	117	CORRIDOR	VINYL TILE	VINYL	PAINT ON GYPSUM W.B.	ACOUSTIC CEILING	9'-0"	
	118	CORRIDOR	VINYL TILE	VINYL	PAINT ON GYPSUM W.B.	ACOUSTIC CEILING	9'-0"	
NF PROCESS BUILDING SECOND FLOOR	200	RECEPTION AREA	CARPET	VINYL	PAINT ON GYPSUM W.B.	ACOUSTIC CEILING	9'-0"	
	201	A/C	SEALED CONCRETE	NONE	EPOXY PAINT ON BLOCK WALL AND CONCRETE	EXP. STRUCTURE	EXP. STR.	
	202	STAIR #1	SEALED CONCRETE	NONE	EPOXY PAINT ON BLOCK WALL AND CONCRETE	EPOXY PAINT ON EXP. STRUCTURE	EXP. STR.	
	203	ENGINEER	CARPET	VINYL	PAINT ON GYPSUM W.B.	ACOUSTIC CEILING	9'-0"	
	204	WOMENS TOILET	CERAMIC TILE	CER. TILE COVE	CERAMIC TILE ON GYPSUM W.B. (MOISTURE RESISTANT)	EPOXY PAINT ON GYPSUM W.B. (MOISTURE RESISTANT)	8'-0"	
	205	MENS TOILET	CERAMIC TILE	CER. TILE COVE	CERAMIC TILE ON GYPSUM W.B. (MOISTURE RESISTANT)	EPOXY PAINT ON GYPSUM W.B. (MOISTURE RESISTANT)	8'-0"	
	206	CITY ENGINEER	CARPET	VINYL	PAINT ON GYPSUM W.B.	ACOUSTIC CEILING	9'-0"	
	207	ENGINEER	CARPET	VINYL	PAINT ON GYPSUM W.B.	ACOUSTIC CEILING	9'-0"	
	208	UTILITIES ENGINEER	CARPET	VINYL	PAINT ON GYPSUM W.B.	ACOUSTIC CEILING	9'-0"	
	209	AUTOCAD DRAFTER, PLOTTER, PRINTERS, PLANS & PERMITS.	CARPET	VINYL	PAINT ON GYPSUM W.B.	ACOUSTIC CEILING	9'-0"	
	210	ELECTRICAL ROOM	VINYL TILE	VINYL	PAINT ON GYPSUM W.B. BLOCK WALL & CONCRETE	EPOXY PAINT ON EXP. STR.	EXP. STR.	
	211	ADMIN. ANALYST	CARPET	VINYL	PAINT ON GYPSUM W.B.	ACOUSTIC CEILING	9'-0"	
	212	ADMIN. ANALYST	CARPET	VINYL	PAINT ON GYPSUM W.B.	ACOUSTIC CEILING	9'-0"	
	213	ASSISTANT CITY ENGINEER	CARPET	VINYL	PAINT ON GYPSUM W.B.	ACOUSTIC CEILING	9'-0"	
	214	SECRETARY	CARPET	VINYL	PAINT ON GYPSUM W.B.	ACOUSTIC CEILING	9'-0"	
	215	CONFERENCE ROOM	CARPET	VINYL	PAINT ON GYPSUM W.B.	ACOUSTIC CEILING	9'-0"	
	216	ASSISTANT DIRECTOR	CARPET	VINYL	PAINT ON GYPSUM W.B.	ACOUSTIC CEILING	9'-0"	
	217	DIRECTOR	CARPET	VINYL	PAINT ON GYPSUM W.B.	ACOUSTIC CEILING	9'-0"	
	218	CORRIDOR	CARPET	VINYL	PAINT ON GYPSUM W.B.	ACOUSTIC CEILING	9'-0"	
	219	CORRIDOR	CARPET	VINYL	PAINT ON GYPSUM W.B.	ACOUSTIC CEILING	9'-0"	
EMERGENCY GENERATOR BUILDING								
	300	ELECTRICAL ROOM	SEALED CONC.	NONE	EPOXY PAINT ON BLOCK WALL AND CONCRETE	EPOXY PAINT ON EXP. STRUCTURE	EXP. STR.	
	301	GENERATOR ROOM	SEALED CONC.	NONE	EPOXY PAINT ON BLOCK WALL AND CONCRETE	EPOXY PAINT ON EXP. STRUCTURE	EXP. STR.	

GENERAL NOTES

1 – ALL WALLS SHALL BE PAINTED CUSTOM COLORS AS SELECTED BY THE ARCHITECT.

2 – ALL VINYL TILE AND VINYL BASE COLORS AND PATTERN SHALL BE AS SELECTED BY ARCHITECT FROM SPECIFIED PRODUCT. (REFER TO SPECIFICATIONS)

3 – ALL CERAMIC TILE COLORS AND TEXTURE SHALL BE AS SELECTED BY ARCHITECT FROM SPECIFIED PRODUCT. (REFER TO SPECIFICATIONS)

4 – ALL ACOUSTICAL CEILING SHALL BE AS SPECIFIED. (REFER TO SPECIFICATIONS)

5 – ALL CERAMIC TILE BASE SHALL BE AS SPECIFIED. (REFER TO SPECIFICATIONS)

6 – ALL CERAMIC TILE SHALL BE FULL HEIGHT OF WALL TO CEILING.

7 – ALL INTERIOR FINISHES AT WALLS AND CEILINGS AT EXITS SHALL BE CLASS A OR CLASS B. REFER TO SPECIFICATIONS

8 – ALL INTERIOR FINISHES AT OFFICES SHALL BE CLASS A OR CLASS B. REFER TO SPECIFICATIONS

9 – ALL INTERIOR FLOOR FINISH IN COORIDORS AND EXITS SHALL BE CLASS I OR CLASS II. REFER TO SPECIFICATIONS

10 – INSTALL A SIGN WITH THE TEXT: "ELECTRICAL ROOM NO STORAGE PERMITTED"

LEGEND

GYP.W.B.
GYPSUM WALL BOARD

GYP.W.B. (M.R.)
GYPSUM WALL BOARD MOISTURE RESISTANT

NOTE: WATERPROOF COATING SYSTEM FOR MEMBRANE BUILDING AND GENERATOR BUILDING EXTERIOR STUCCO WALLS TO BE AS FOLLOWS:
TWO (2) COATS ICI ELASTOMERIC 2260 SERIES WATERBORNE ACRYLIC (EACH 4.0– 8.0 DFT)

RECORD DRAWINGS

CARTAYA & ASSOCIATES ARCHITECTS P.A.
3077 E. COMMERCIAL BLVD. SUITE 201
FT. LAUDERDALE, FLORIDA 33308
771-2724 FAX 776-4280

NO.	DATE	ISSUED FOR	BY
1	01/08	RECORD DRAWINGS	M.C.

DESIGNED M.C.
DRAWN S.A.
CHECKED M.C.
PROJ. ENGR. M.C.

MARIO CARTAYA R.A.
No. AAC001388

HAZEN AND SAWYER
Environmental Engineers & Scientists
4000 Hollywood Boulevard, Suite 750N
Hollywood, Florida 33021
(954) 987-0066

SCALE N.T.S.

CONTRACT: –
CLIENTS PROJECT:
ENGINEERS PROJECT: 40406
CAD REFERENCE: 40406A10

CITY OF HALLANDALE BEACH
UTILITIES DEPARTMENT

6 MGD MEMBRANE SOFTENING W.T.P.

NF PROCESS BUILDING

FINISH SCHEDULE

DATE: JANUARY 2008
SHEET: 99 OF 162
DRAWING: A-10

PLOT DATE: 2/6/2008 4:40 PM BY: AMEDINA

XREFs:

File = O:\40406\40406-001\Drawings\ARCH\40406A10 Saved by CARTAYA09 Save date = 2/4/2008 2:47 PM

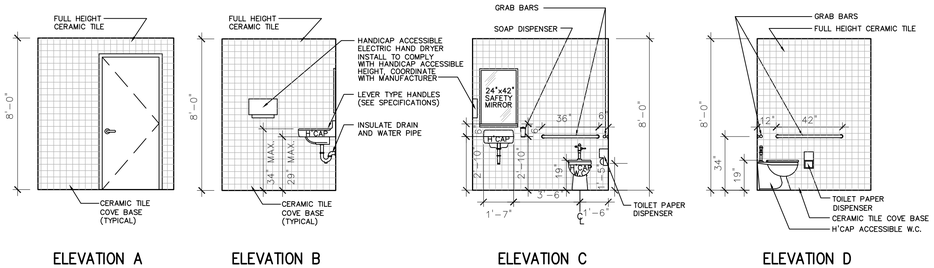

TYPICAL HANDICAP TOILET ELEVATIONS – SECOND FLOOR

1/4"=1'-0"

1 / A-11

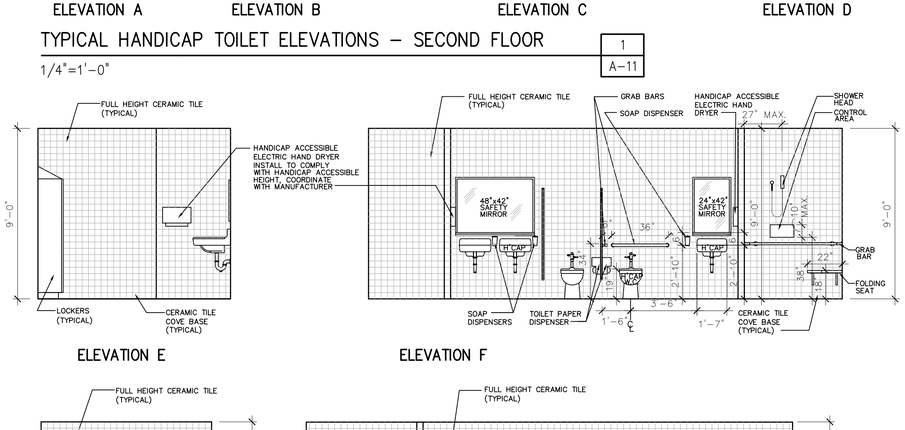

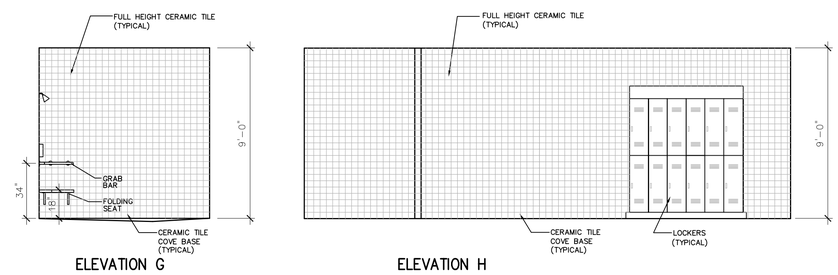

WOMEN'S HANDICAP TOILET & SHOWER ELEVATIONS – FIRST FLOOR

1/4"=1'-0" (MEN'S – REVERSE)

2 / A-11

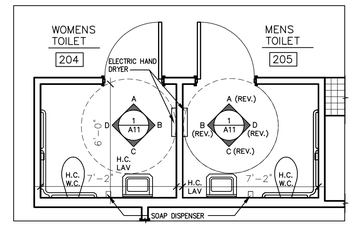

H.C. TOILETS – 2ND. FLR. PLAN

1/4"=1'-0"

4 / A-11

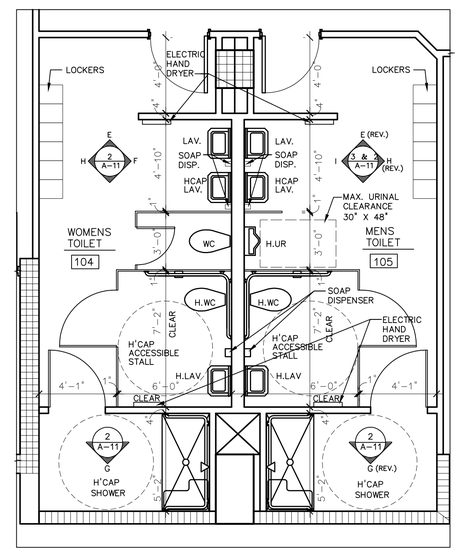

TOILETS – FIRST FLOOR PLAN

1/4"=1'-0"

5 / A-11

FLORIDA ACCESSIBLE CODE AND A.D.A. SPECIFICATIONS

HANDICAP ACCESSIBILITY NOTES:

4.13.10• Door Closers. If a door has a closer, then the sweep period of the closer shall be adjusted so that from and open position of 70 degrees, the door will take at least 3 seconds to move to a point 3 in. (75mm) from the latch, measured to the leading edge of the door.

4.13.11 Door Opening Force. The maximum force for pushing or pulling open a door shall be as follows:

(1) Fire doors shall have the minimum opening force allowable by the appropriate administrative authority.

(2) Other doors.

(a) exterior hinged doors: (reserved)

(b) interior hinged doors: 5 lbf (22.2N)

(c) sliding or folding doors: 5 lbf (22.2N)

These forces do not apply to the force required to retract latch bolts or disengage other devices that may hold the door in a closed position.

4.15 Drinking Fountains and Water Coolers.

4.15.1 Minimum Number. Drinking fountains or water coolers required to be accessible by 4.1 shall comply with 4.15.

4.15.2• Spout Height. Spouts shall be no higher than 36 in. (915 mm), measured from the floor or ground surfaces to the spout outlet (see fig. 27(a)).

4.15.3 Spout Location. The spouts of drinking fountains and water coolers shall be at the front of the unit and shall direct the water flow in trajectory that is parallel of nearly parallel to the front of the unit. The spout shall provide a flow of water at least 4 in. (100 mm) high so as to allow the insertion of a cup or glass under the flow of water. On an accessible drinking fountain with a round or oval bowl the spout must be positioned so the flow of water is within 3 in. (75 mm) of the front edge of the fountain.

4.15.4 Controls. Controls shall comply with 4.27.4. Unit controls shall be front mounted or side mounted near the front edge.

4.15.5 Clearances.

(1) Wall– and post– mounted cantilevered units shall have a clear knee space between the bottom of the apron and the floor of ground at least 27 in. (685 mm) high, 30 in (760 mm) wide, and 17 in. to 19 in. (430 mm to 485 mm) deep (see fig. 27(c) and (b)). Such units shall also have a minimum clear floor space 30 in. by 48 in. (760 mm by 1220 mm) to allow a person in a wheelchair to approach the unit facing forward.

(2) Free–standing or built–in units not having a clear space under them shall have a clear floor space at least 30 in by 48 in (760 mm by 1220 mm) that allows a person in a wheelchair to make a parallel approach to the unit (see fig. 27(c) and (d)). This clear floor space shall comply with 4.2.4.

4.16 Water Closets.

4.16.1 General. Accessible water closets shall comply with 4.16.

4.16.2 Clear Floor Space. Clear floor space for the water closets not in stalls shall comply with fig. 28. Clear floor space may be arranged to allow either a left–handed of right–handed approach.

4.16.3• Height. The height of water closets shall be 17 in. to 19 in. (430 mm to 485 mm) measured to the top of the toilet seat (see fig. 29(b)). Seats shall not be sprung to return to a lifted position.

4.16.4• Grab Bars. Grab bars for water closets not located in stalls shall comply with 4.26 and Fig. 29. The grab bar behind the water closet shall be 36 in. (915 mm) minimum.

4.16.5• Flush Controls. Flush controls shall be hand operated or automatic and shall comply with 4.27.4. Controls for flush valves shall be mounted on the wide side of the toilet areas no more than 44 in. (1220 mm) above the floor.

4.16.6 Dispensers. Toilet paper dispensers shall be installed within reach, as shown in Fig.29(b). Dispensers that control delivery, or that do not permit continuous paper flow, shall not be used.

4.17 Toilet Stalls

4.17.1 Location. Accessible toilet stalls shall be on an accessible route and shall meet the requirements of 4.17.

4.17.2 Water Closets. Water closets in accessible stalls shall comply with 4.16.

4.17.3• Size and Arrangement. The size and arrangement of the standard toilet stall shall comply with Fig. 30(a), Standard Stall. Standard toilet stalls with a minimum depth of 56 in. (1420 mm) (see Fig. 30(a)) shall have wall–mounted water closets. If the depth of a standard toilet stall is increased at least 3 in. (75 mm), then a floor–mounted water closet may be used. Arrangements shown for standard toilet stalls may be reversed to allow either a left– or right–hand approach. Additional stalls shall be provided in conformance with 4.22.4.

EXCEPTION: In instances of alteration work where provision of a standard stall (Fig. 30(a) is technically infeasable or where plumbing code requirements prevent combining existing stalls to provide space, either alternate stall (Fig. 30(b)) may be provided in lieu of the standard stall.

4.17.4 Toe Clearances. In standard stalls, the front partition and at least one side partition shall provide a toe clearance of at least 9 in. (230 mm) above the floor. If the depth of the stall is greater than 60 in. (1525 mm), then the toe clearance is not required.

4.17.5• Doors. Toilet stall doors, including door hardware, shall comply with 4.13. If toilet stall approach is from the latch side of the stall door, clearance between the door side of the stall and any obstruction may be reduced to a minimum of 42 in. (1065 mm) (Fig. 30).

4.19 Lavatories and Mirrors.

4.19.1 General. The requirements of 4.19 shall apply to lavatory fixtures, vanities, and built–in lavatories.

4.19.2 Height and Clearances. Lavatories shall be mounted with the rim or counter surface no higher than 34 in. (865 mm) above the finish floor. Provide a clearance of at least 29 in. (735 mm) above the finish floor to the bottom of the apron. Knee and toe clearance shall comply with Fig. 31.

4.19.3 Clear Floor Space. A clear floor space 30 in. by 48 in. (760 mm by 1220 mm) complying with 4.2.4 shall be provided in front of a lavatory to allow forward approach. Such clear floor space shall adjoin or overlap an accessible route and shall extend a maximum of 19 in. (485 mm) underneath the lavatory (see Fig. 32).

4.19.4 Exposed Pipes and Sufaces. Hot water and drain pipes under lavatories shall be insulated or otherwise configured to protect against contact. There shall be no sharp or abrasive surfaces under lavatories.

4.19.5• Faucets. Faucets shall comply with 4.27.4. Lever–operated, push–type, and electronically controlled mechanisms are examples of acceptable designs. If self–closing valves are used the faucet shall remain open for at least 10 seconds.

4.19.6• Mirrors. Mirrors shall be mounted with the bottom edge of the reflecting surface no higher than 40 in. (1015 mm) above the finish floor (see Fig. 31).

4.21 Shower Stalls.

4.21.1• General. Accessible shower stalls shall comply wiht 4.21.

4.21.2 Size and Clearances. Except as specified in 9.1.2, shower stall size and clear floor space shall comply with Fig.35(a) of (b). The shower stall in Fig. 35(a) shall be 36 in by 36 in.(915 mm by 915 mm), Shower stalls required by 9.1.2 shall comply with Fig. 57(a) or (b). The shower shall in Fig. 35(b) will fit into the space required for a bathtub.

4.21.3 Seat. A seat shall be provided in shower stalls 36 in. by 36 in.(915 mm by 915 mm) and shall be as shown in Fig. 36. The seat shall be mounted 17 in. to 19 in.(430 mm to 485 mm) from the bathroom floor and shall extend the full depth of the stall.

In a 36 in. by 36 in. (915 mm by 915 mm) shower stall, the seat shall be on the wall opposite the controls. Where a fixed seat is provided in a 30 in. by 60 in. minimum (760 mm by 1525 mm) shower stall, it shall be a folding type and shall be mounted on the wall adjacent to the controls as shown in Fig. 57. The structural strength of the seats and their attachments shall comply with 4.26.3.

4.21.4 Grab Fars. Grab bars complying with 4.26 shall be provided as shown in Fig. 37.

4.21.5 Controls. Faucets and other controls complying with 4.27 shall be located as shown in Fig. 37. In shower stalls 36 in. by 36 in. (915 mm by 915 mm), all controls, faucets, and the shower unit shall be mounted on the side wall opposite the seat.

4.21.6 Shower Unit. A shower spray unit with a hose at least 60 in. (1525 mm) long that can be used both as a fixed shower head and a a hand–held shower shall be provided.

EXCEPTION: In unmonitored facilities where vandalism is a consideration, a fixed shower head mounted at 48 in (1220 mm) above the shower floor may be used in lieu of a hand–held shower head.

4.21.7 Curbs. If provided, curbs in shower stalls 36 in. by 36 in. (915 mm by 915 mm) shall be no higher than 1/2 in. (13 mm). Shower stalls that are 30 in. by 60 in. (760 mm by 1525 mm) minimum shall not have curbs.

4.21.8 Shower Enclosures. If provided, enclosures for shower stalls shall not obstruct controls or obstruct transfer from wheelchairs onto shower seats.

4.23 Bathrooms, Bathing Facilities and Shower Rooms

4.23.1 Minimum Number. Bathrooms, bathing facilities or shower rooms required to be accessible by 4.1 shall comply with 4.23 and shall be on an accessible route.

4.23.2 Doors. Doors to accessible bathrooms shall comply with 4.13. Doors shall not swing into the floor space required for any fixture.

4.23.3• Clear Floor Space. The accessible fixtures and controls required in 4.23.4, 4.23.5, 4.23.6, 4.23.7, 4.23.8 and 4.23.9 shall be on an accessible route. An unobstructed turning space complying with 4.2.3 shall be provided within and accessible bathroom. The clear floor space at fixtures and controls, the accessible route and the turning space may overlap.

4.23.7 Controls and Dispensers. If controls, dispensers, receptacles, or other equipment are provided, then at least one of each shall be on an accessible route and shall comply with 4.27.

4.23.8 Bathing and Shower Facilities. If tubs and showers are provided, then at least one accessible tub that complies with 4.20 or at least one accessible shower that complies with 4.21 shall be provided.

4.26 Handrails, Grab Bars, and Tub and Shower Seats.

4.26.1• General. All handrails, grab bars, and tub and shower seats required to be accessible by 4.1, 4.8, 4.9, 4.16, 4.17, 4.20 or 4.21 shall comply with 4.26.

4.26.2 Size and Spacing of Grab Bars and Handrails. The diameter or width of the gripping surfaces of a handrail or grab bar shall be 1–1/4 in. to 1–1/2 in. (32 mm to 38 mm), or the shape shall provide an equivalent gripping surface. If handrails or grab bars are mounted adjacent to a wall, the space between the wall and the grab bar shall be 1–1/2 in. (38 mm) (see Fig. 39(a), (b), (c), and (e)). Handrails may be located in a recess if the recess is a maximum of 3 in. (75 mm) deep and extends at least 18 in. (455 mm) above the top of the rail (see Fig. 39(d)).

4..26.3 Structural Strength. The structural strength of grab bars, tub and shower seats, fasteners, and mounting devices shall meet the following specifications:

(1) Bending stress in a grab bar or seat induced by the maximum bending moment from the application of 250 lbf (1112N) shall be less than the allowable stress for the material of the grab bar or seat.

(2) Shear stress induced in a grab bar of seat by the application of 250 lbf (1112N) shall be less than the allowable shear stress for the material of the grab bar or seat. If the connection between the grab bar or seat and its mounting bracket or other support is considered to be fully restrained, then direct and torsional shear stresses shall be totaled for the combined shear stress, which shall not exceed the allowable shear stress.

(3) Shear force induced in a fastener or mounting device from the application of 250 lbf (1112N) shall be less than the allowable lateral load of either the fastener or mounting device or the supporting structure, whichever is the smaller allowable load.

(4) Tensile force induced in a fastener by a direct tension force of 250 lbf (1112N) plus the maximum moment from the application of 250 lbf (1112N) shall be less than the allowable withdrawal load between the fastener and the supporting structure.

(5) Grab bars shall not rotate within their fittings.

4.26.4 Eliminating Hazards. A handrail or grab bar and any wall or other surface adjacent to it shall be free of any sharp or abrasive elements. Edges shall have a minimum radius of 1/8 in. (3.2 mm).

5.1• General. Except as specified or modified in this section, restaurants and cateterias shall comply with the requirements of 4.1 to 4.35. Where fixed tables (or dining counters where food is consumed but there is no service) are provided, at least 5 percent, but not less than one, of the fixed tables (or a portion of the dining counter) shall be accessible and shall comply with 4.32 as required in 4.1.3(18). In establishments where separate areas are designated for smoking and non–=smoking patrons, the required number of accessible fixed tables (or counters) shall be proportionally distributed between the smoking and non–smoking areas. In new construction, and where practicable in alterations, accessible fixed tables (or counters) shall be distributed throughout the space or facility.

5.2 Counters and Bars. Where food or drink is served at counters exceeding 34 in (865 mm) in height for consumption by customers seated on stools or standing at the counter, a portion of the main counter which is 60 in. (1525 mm) in length minimum shall be provided in compliance with 4.32 or service shall be available at accessible tables within the same area.

5.3 Access Aisles. All accessible fixed tables shall be accessible by means of an access aisle at least 36 in. (915 mm) clear between parallel edges of tables or between a wall and the table edges.

5.4 Dining Areas. In new construction, all dining areas, including raised or sunken dining areas, loggias, and outdoor seating areas, shall be accessible. In non–elevator buildings, and accessible means of vertical access to the mezzanine is not required under the following conditions: 1) the area of mezzanine seating measures no more than 33 percent of the area of the total accessible seating area; 2) the same services and decor are provided in an accessible space usable by the general public; and 3) the accessible areas are not restricted to use by people with disabilities. In alterations, accessibility to raised or sunken dining areas, or to all parts of outdoor seating areas is not required provided that the same services and decor are provided in an accessible space usable by the general public and are not restricted to use by people with disabilities.

5.5 Food Service Lines. Food service lines shall have a minimum clear width of 36 in (915 mm), with a preferred clear width of 42 in. (1065 mm) to allow passage around a person using a wheelchair. Tray slides shall be mounted no higher than 34 in. (865 mm) above the floor (see Fig. 53). If self–service shelves are provided, at least 50 percent of each type must be within reach ranges specified in 4.2.5 and 4.2.6.

5.6 Tableware and Condiment Areas. Self–service shelves and dispensing devices for tableware, dishware, condiments, food and beverages shall be installed to comply with 4.2 (see Fig. 54).

5.7 Raised Platforms. In banquet rooms or spaces where a head table or speaker's lectern is located on a raised platform, the platform shall be accessible in compliance with 4.8 or 4.11. Open edges of a raised platform shall be protected by placement of tables or by a curb.

5.8 Vending Machines and Other Equipment. Spaces for vending machines and other equipment shall comply with 4.2 and shall be located on an accessible route.

5.9 Quiet Ares. (reserved)

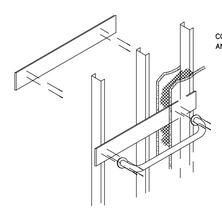

CONCEALED ANCHOR PLATE FOR GRAB BARS AND SAFETY RAILINGS (STUD WALL CONSTRUCTION)

MATERIALS: ANCHOR – 12 GAUGE (.105) STEEL PLATE WITH 1/4" .20 THREADED HOLES EXTRUDED TO GIVE .200–INCH MIN. USABLE THREAD PER HOLE.

MOUNTING SCREWS – 300 SERIES STAINLESS STEEL MACHINE SCREWS 1–1/2" LONG.

INSTALLATION: ANCHOR PLATE MUST BE PROPERLY SECURED TO STUDS TO SUPPORT MAXIMUM LOAD ON GRAB BAR OR SAFETY RAILING

AFTER WALL IS FINISHED, FLANGE OR CONCEALED MOUNTING PLATE IS TO BE ATTACHED TO ANCHOR PLATE WITH MOUNTING SCREWS FURNISHED. FOR PLASTER OR TILE WALLS, MOUNTING SCREWS SHOULD BE TEMPORARILY SCREWED INTO ANCHOR PLATE BEFORE APPLICATION OF FINISHED WALL.

SPECIFICATION: CONCEALED STUD WALL ANCHOR PLATE SHALL BE 12 GA. (.105) STEEL PLATE WITH PIERCED HOLES

TO GIVE .200–INCH MINIMUM LENGTH OF 1/4" .20 MACHINE THREADS FOR GRAB BAR ATTACHMENT.

GRAB BARS DETAIL

1/4"=1'-0"

6 / A-11

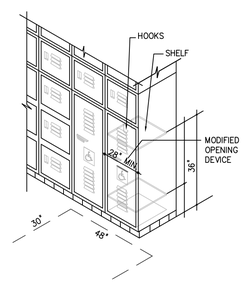

DETAIL AT H.C. ACCESSIBLE LOCKER

1/4"=1'-0"

7 / A-11

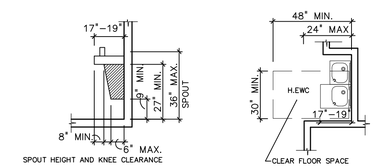

NOTE:

DRINKING FOUNTAIN SHALL BE A HI–LO FOUNTAIN. ONE DRINKING FOUNTAIN SHALL BE HANDICAP ACCESSIBLE AND ONE DRINKING FOUNTAIN SHALL BE FOR THOSE HAVING DIFFICULTY BENDING OR STOOPING AS PER CHAPTER 4.15 OF THE FLORIDA ACCESSIBILITY CODE.

WATER COOLER DETAILS

1/4"=1'-0"

8 / A-11

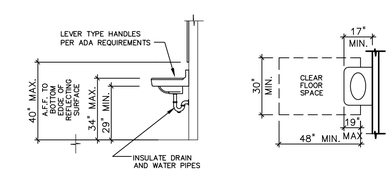

DETAILS AT H.C. ACCESSIBLE LAV.

1/4"=1'-0"

9 / A-11

1/4"=1'-0"

FINISH NOTES:

1 – ALL EXPOSED SURFACES SHALL BE PAINTED CUSTOM COLORS AS SELECTED BY THE ARCHITECT.
2 – ALL CERAMIC TILE COLORS AND TEXTURE SHALL BE AS SELECTED BY ARCHITECT FROM SPECIFIED PRODUCT. (REFER TO SPECIFICATIONS)
3 – ALL CERAMIC TILE BASE SHALL BE AS SPECIFIED. (REFER TO SPECIFICATIONS)
4 – ALL CERAMIC TILE ON WALLS SHALL BE FULL HEIGHT FROM FINISH FLOOR TO CEILING.
5 – TOILET ROOM TO HAVE CERAMIC TILE FLOOR AS SPECIFIED (REER TO SPECIFICATIONS)

RECORD DRAWINGS

CARTAYA & ASSOCIATES ARCHITECTS P.A.
3077 E. COMMERCIAL BLVD. SUITE 201
FT. LAUDERDALE, FLORIDA 33308
771-2724 FAX 776-4280

NO.	DATE	ISSUED FOR	BY
1	01/08	RECORD DRAWINGS	M.C.

DESIGNED M.C.
DRAWN S.A.
CHECKED M.C.
PROJ. ENGR. M.C.

MARIO CARTAYA R.A.
No. AAC001388

HAZEN AND SAWYER
Environmental Engineers & Scientists
4000 Hollywood Boulevard, Suite 750N
Hollywood, Florida 33021
(954) 987-0066

SCALE 1/4" = 1'-0"

CONTRACT: –
CLIENTS PROJECT:
ENGINEERS PROJECT: 40406
CAD REFERENCE: 40406A-11

CITY OF HALLANDALE BEACH City of Choice
CITY OF HALLANDALE BEACH
UTILITIES DEPARTMENT

6 MGD MEMBRANE SOFTENING W.T.P.

NF PROCESS BUILDING
TOILET FLOOR PLANS
AND ELEVATIONS

DATE: JANUARY 2008
SHEET: 100 OF 162
DRAWING: A-11

PLOT DATE: 2/6/2008 4:40 PM BY: AMEDINA

XREFs= O:\40406\40406-001\Drawings\200\PT-P2-AB,O:\40406\40406-001\Drawings\200\PT-P1-AB

File = O:\40406\40406-001\Drawings\ARCH\40406A11 Saved by ---- Save date = 2/5/2008 9:03 AM

DOOR SCHEDULE / PROCESS BUILDING

	NO.	SIZE	DOOR MATERIAL	DOOR ELEV.	FRAME MATERIAL	FRAME ELEV.	THRESHOLD	CLOSER	REMARKS
FIRST FLOOR	1–1	(2) 3'–0" x 8'–0"	ALUM. & GLASS	*	ALUM.	SEE ELEVATIONS SHEET A–6	ALUMINUM	YES	* INTEGRAL WITH GLASS STOREFRONT ASSEMBLY IMPACT RESISTANT ASSEMBLY & GLASS,(NOTE #9) W/ ASTRAGAL
	1–2	(2) 3'–0" x 8'–0" x 1 3/4"	H.M.	A	H.M.	2	ALUMINUM	–	1 1/2 HOUR RATED DOOR AND FRAME ASSEMBLY (NOTE #8 & #9)
	1–3	(2) 3'–0" x 8'–0" x 1 3/4"	H.M.	B	H.M.	2	ALUMINUM	–	(NOTE # 8 & #9)
	1–4	3'–0" x 8'–0" x 1 3/4"	H.M.	B	H.M.	1	ALUMINUM	YES	1 1/2 HOUR RATED DOOR AND FRAME ASSEMBLY (NOTE # 8 & #9)
	1–5	3'–0" x 7'–0" x 1 3/4"	H.M.	B	H.M.	1	ALUMINUM	YES	1 1/2 HOUR RATED DOOR AND FRAME ASSEMBLY (NOTE # 8 & #9)
	1–6	3'–0" x 7'–0" x 1 3/4"	S.C. WOOD	A	H.M.	1	ALUMINUM	–	
	1–7	(2) 3'–0" x 7'–0" x 1 3/4"	H.M.	B	H.M.	2	ALUMINUM	YES	1 1/2 HOUR RATED DOOR AND FRAME ASSEMBLY (NOTE # 8 & #9)
	1–8	3'–0" x 7'–0" x 1 3/4"	S.C. WOOD	B	H.M.	1	ALUMINUM	–	
	1–9	(2) 3'–0" x 7'–0" x 1 3/4"	S.C. WOOD	B	H.M.	2	ALUMINUM	YES	
	1–10	3'–0" x 7'–0" x 1 3/4"	H.M.	B	H.M.	1	ALUMINUM	YES	1 1/2 HOUR RATED DOOR AND FRAME ASSEMBLY (NOTE # 8 & #9)
	1–11	3'–0" x 7'–0" x 1 3/4"	S.C. WOOD	B	H.M.	1	ALUMINUM	–	
	1–12	3'–0" x 7'–0" x 1 3/4"	S.C. WOOD	B	H.M.	1	–	–	
	1–13	3'–0" x 7'–0" x 1 3/4"	S.C. WOOD	B	H.M.	1	ALUMINUM	–	
	1–14	3'–0" x 7'–0" x 1 3/4"	S.C. WOOD	B	H.M.	1	ALUMINUM	YES	
	1–15	3'–0" x 8'–0" x 1 3/4"	ALUM. & GLASS	*	H.M.	SEE ELEVATIONS SHEET A–7	ALUMINUM	YES	* INTEGRAL WITH GLASS STOREFRONT ASSEMBLY IMPACT RESISTANT ASSEMBLY & GLASS,(NOTE #9)
	1–16	(2) 3'–0" x 7'–0" x 1 3/4"	SOUND PROOF H.M.	A	H.M.	2	ALUMINUM	YES	
	1–17	(2) 3'–0" x 7'–0" x 1 3/4"	H.M.	A	H.M.	1	ALUMINUM	YES	1 1/2 HOUR RATED DOOR AND FRAME ASSEMBLY (NOTE # 8 & #9) W/ ASTRAGAL
	1–18	(2) 3'–0" x 8'–0" x 1 3/4"	H.M.	B	H.M.	2	ALUMINUM	YES	
	1–19	3'–0" x 8'–0" x 1 3/4"	H.M.	B	H.M.	1	ALUMINUM	YES	
	1–20	3'–0" x 8'–0" x 1 3/4"	H.M.	A	H.M.	1	ALUMINUM	YES	
	1–21	3'–0" x 8'–0" x 1 3/4"	H.M.	A	H.M.	1	ALUMINUM	YES	
	1–22	3'–0" x 8'–0" x 1 3/4"	H.M.	B	H.M.	1	ALUMINUM	YES	
	1–23	16'–0" WIDE x 12'–0" HIGH	STEEL	C	NONE	–	NONE	–	
	1–24	3'–0" x 7'–0" x 1 3/4"	FRP	A	FRP	1	ALUMINUM	YES	1 1/2 HOUR RATED DOOR AND FRAME ASSEMBLY (NOTE # 8 & #9)
	1–25	3'–0" x 7'–0" x 1 3/4"	FRP	A	FRP	1	ALUMINUM	YES	1 1/2 HOUR RATED DOOR AND FRAME ASSEMBLY (NOTE # 8 & #9)
	1–26	3'–0" x 7'–0" x 1 3/4"	S.C. WOOD	A	H.M.	2	CULTURED MARBLE	YES	
	1–27	3'–0" x 7'–0" x 1 3/4"	S.C. WOOD	A	H.M.	2	CULTURED MARBLE	YES	
	1–28	10'–0" WIDE x 8'–0" HIGH	STEEL	C	H.M.	–	NONE	–	
	1–29	3'–0" x 7'–0" x 1 3/4"	S.C. WOOD	B	H.M.	1	ALUMINUM	YES	
	1–30	3'–0" x 7'–0" x 1 3/4"	S.C. WOOD	B	H.M.	1	ALUMINUM	YES	3/4 HOUR RATED DOOR AND FRAME ASSEMBLY
SECOND FLOOR	2–1	3'–0" x 7'–0" x 1 3/4	SOUND PROOF H.M.	A	H.M.	4	ALUMINUM	–	–
	2–2	3'–0" x 7'–0" x 1 3/4	H.M.	B	H.M.	1	ALUMINUM	YES	1 1/2 HOUR RATED DOOR AND FRAME ASSEMBLY (NOTE # 8 & #9)
	2–3	3'–0" x 7'–0" x 1 3/4	S.C. WOOD	B	H.M.	1	ALUMINUM	YES	
	2–4	3'–0" x 7'–0" x 1 3/4	S.C. WOOD	B	H.M.	1	ALUMINUM	–	
	2–5	3'–0" x 7'–0" x 1 3/4	S.C. WOOD	A	H.M.	1	CULTURED MARBLE	YES	
	2–6	3'–0" x 7'–0" x 1 3/4	S.C. WOOD	A	H.M.	1	CULTURED MARBLE	YES	
	2–7	3'–0" x 7'–0" x 1 3/4	S.C. WOOD	B	H.M.	1	ALUMINUM	–	
	2–8	3'–0" x 7'–0" x 1 3/4	S.C. WOOD	B	H.M.	1	ALUMINUM	–	
	2–9	3'–0" x 7'–0" x 1 3/4	S.C. WOOD	B	H.M.	1	ALUMINUM	–	
	2–10	3'–0" x 7'–0" x 1 3/4	S.C. WOOD	A	H.M.	1	ALUMINUM	YES	3/4 HOUR RATED DOOR AND FRAME ASSEMBLY
	2–11	3'–0" x 7'–0" x 1 3/4	S.C. WOOD	B	H.M.	1	ALUMINUM	–	
	2–12	3'–0" x 7'–0" x 1 3/4	S.C. WOOD	B	H.M.	1	ALUMINUM	–	
	2–13	3'–0" x 7'–0" x 1 3/4	S.C. WOOD	B	H.M.	1	ALUMINUM	–	
	2–14	3'–0" x 7'–0" x 1 3/4	S.C. WOOD	B	H.M.	1	ALUMINUM	–	
	2–15	3'–0" x 7'–0" x 1 3/4	S.C. WOOD	A	H.M.	1	–	–	
	2–16	3'–0" x 7'–0" x 1 3/4	S.C. WOOD	B	H.M.	1	ALUMINUM	–	
	2–17	3'–0" x 8'–0" x 1 3/4	H.M.	B	H.M.	1	ALUMINUM	YES	1 1/2 HOUR RATED DOOR AND FRAME ASSEMBLY (NOTE # 8 & #9)
	2–18	3'–0" x 7'–0" x 1 3/4	S.C. WOOD	B	H.M.	1	ALUMINUM	–	

DOOR SCHEDULE / GENERATOR BUILDING

3–1	(2) 3'–0" x 8'–0" x 1 3/4	H.M.	B	H.M.	2	ALUMINUM	YES	(NOTE # 8 & #9)
3–2	(2) 3'–0" x 8'–0" x 1 3/4	H.M.	B	H.M.	2	ALUMINUM	YES	(NOTE # 8 & #9)
3–3	(2) 3'–0" x 8'–0" x 1 3/4	H.M.	B	H.M.	2	ALUMINUM	YES	(NOTE # 8 & #9)
3–4	(2) 3'–0" x 8'–0" x 1 3/4	H.M.	B	H.M.	2	ALUMINUM	YES	(NOTE # 8 & #9)

GENERAL NOTES - DOORS SCHEDULE

1 – ALL HOLLOW METAL & WOOD DOORS AND FRAMES, SHALL BE PAINTED CUSTOM COLOR AS SELECTED BY ARCHITECT.

2 – ALL ALUMINUM DOORS AND STOREFRONT FRAMES, SHALL BE CUSTOM COLOR FACTORY APPLIED AS SELECTED BY ARCHITECT.

3 – ALL EXTERIOR LOUVERED DOORS SHALL HAVE INSECT SCREEN.

4 – REFER TO MECHANICAL PLANS FOR AIR TRANSFER GRILLES MOUNTED ON DOORS.

5 – ALL DOOR HANDLES SHALL BE LEVER TYPE UNLESS OTHERWISE NOTED.

6 – M.O. – MASONRY OPENING

7 – SUBMIT PRODUCT APPROVAL FORMS ON ALL EXTERIOR DOOR AND FRAME ASSEMBLIES

8 – DISPLAY A SIGN, PERMANENTLY AFFIXED TO WALL ADJACENT TO DOOR WITH RED LETTERS AT LEAST 1" HIGH WITH THE FOLLOWING TEXT: "FIRE DOOR DO NOT OBSTRUCT"

9 – THE USE OF A KEY OR THUMB LOCKING DEVICE ON EGRESS DOORS WILL NOT BE PERMITTED

10 – FIRE DOORS SHALL BE INSTALLED IN ACCORDANCE WITH NFPA 80 STANDARD FOR FIRE DOORS AND FIRE WINDOWS 1999 EDITION.

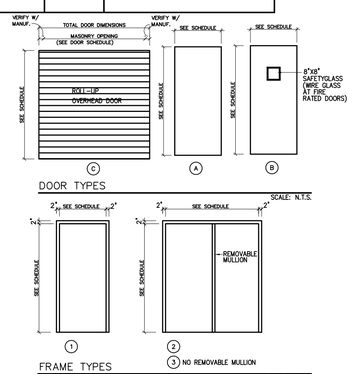

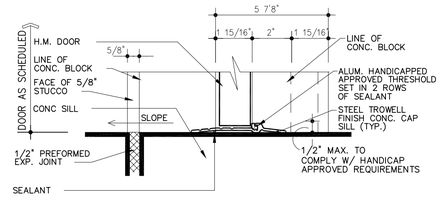

EXTERIOR THRESHOLD

3" = 1'–0" SEE GENERAL NOTES THIS DRAWING. 1 / A–12

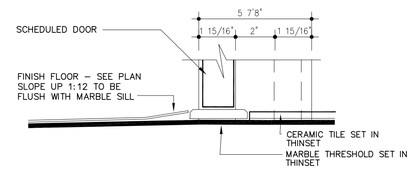

THRESHOLD DETAIL

3" = 1'–0" SEE GENERAL NOTES THIS DRAWING. 2 / A–12

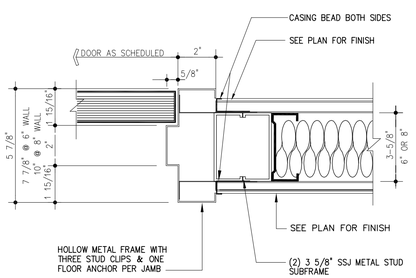

DOOR JAMB DTL (HEAD DTL SIMILAR)

3" = 1'–0" SEE GENERAL NOTES THIS DRAWING. 3 / A–12

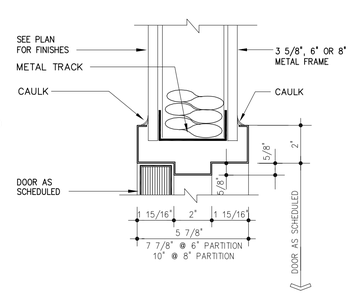

DOOR HEAD DETAIL

3" = 1'–0" SEE GENERAL NOTES THIS DRAWING. 4 / A–12

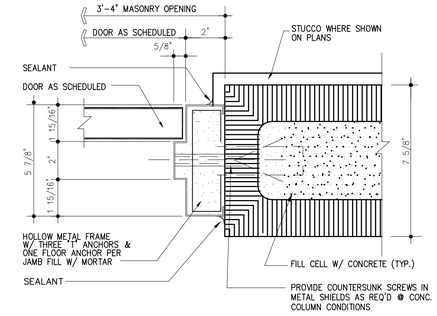

DOOR JAMB / HEAD DETAIL

3" = 1'–0" 5 / A–12

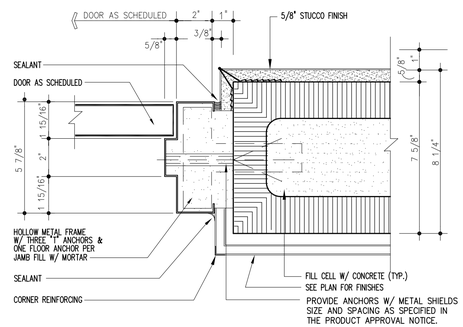

DOOR JAMB DETAIL

3" = 1'–0" SEE GENERAL NOTES THIS DRAWING. 6 / A–12

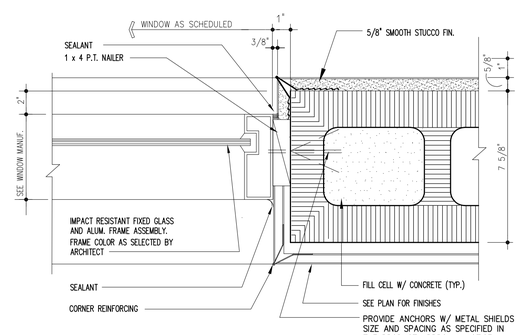

WINDOW JAMB DETAIL

3" = 1'–0" 7 / A–12

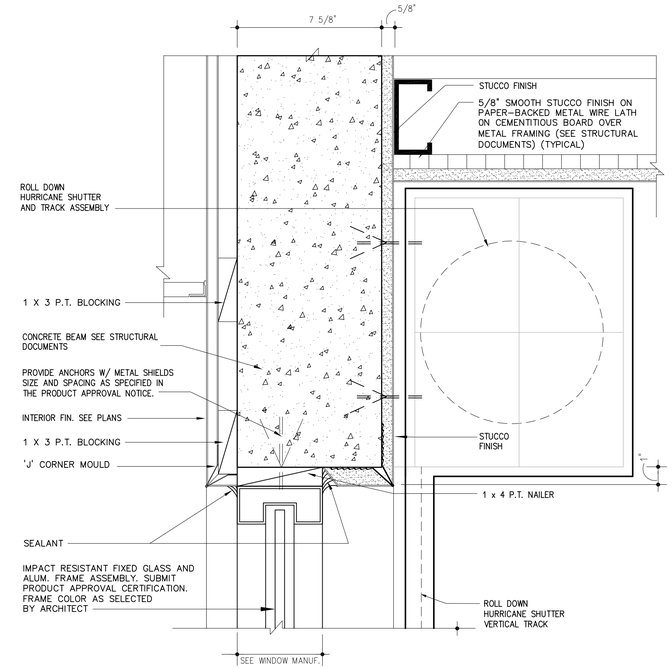

WINDOW HEAD DETAIL

3" = 1'–0" 8 / A–12

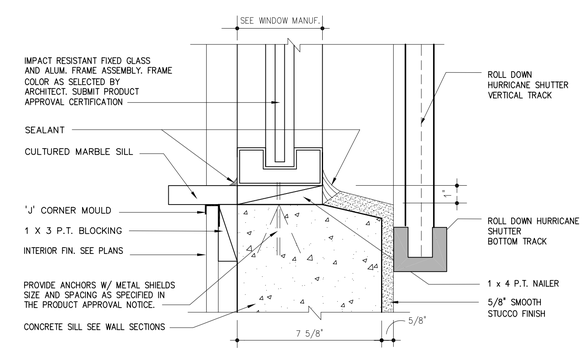

WINDOW SILL DETAIL

3" = 1'–0" 9 / A–12

RECORD DRAWINGS

CARTAYA & ASSOCIATES ARCHITECTS P.A.

3077 E. COMMERCIAL BLVD. SUITE 201
FT. LAUDERDALE, FLORIDA 33308
771–2724 FAX 776–4280

3"=1'–0" 3" 0 6"

NO.	DATE	ISSUED FOR	BY
1	01/08	RECORD DRAWINGS	M.C.

DESIGNED M.C.
DRAWN S.A.
CHECKED M.C.
PROJ. ENGR. M.C.

MARIO CARTAYA R.A.
No. AAC001388

HAZEN AND SAWYER
Environmental Engineers & Scientists
4000 Hollywood Boulevard, Suite 750N
Hollywood, Florida 33021
(954) 987–0066

SCALE: VARIOUS

CONTRACT: –
CLIENTS PROJECT:
ENGINEERS PROJECT: 40406
CAD REFERENCE: 40406A

CITY OF HALLANDALE BEACH
UTILITIES DEPARTMENT

6 MGD MEMBRANE SOFTENING W.T.P.

NF PROCESS BUILDING

DOOR SCHEDULE

DATE: JANUARY 2008
SHEET: 101 OF 162
DRAWING: A–12

PLOT DATE: 2/8/2008 4:41 PM BY: AMEDINA
XREFs=
File = O:\40406\40406–001\Drawings\ARCH\40406A12 Saved by ---- Save date = 2/4/2008 2:47 PM

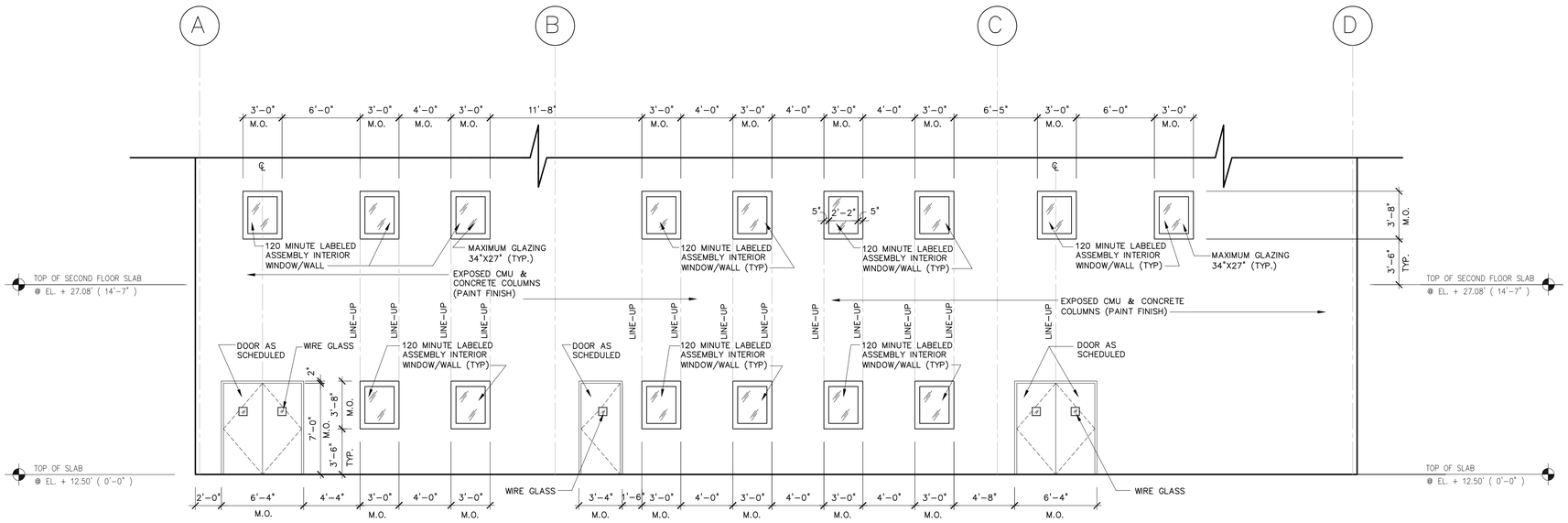

NOTE: SEE 120 MINUTE LABELED ASSEMBLY INTERIOR WINDOW/WALL JAMB SILL & HEAD DETAIL (TYPICAL)

INTERIOR ELEVATION

3/16" = 1'-0"

1 / A-13

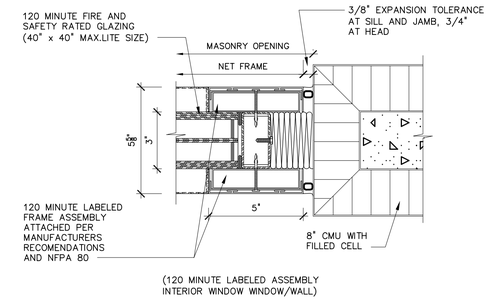

JAMB SILL AND HEAD DETAIL

3" = 1'-0"

2 / A-13

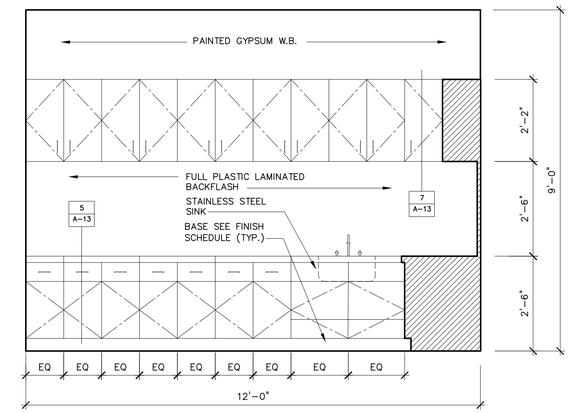

KITCHEN ELEVATION

1/2" = 1'-0"

3 / A-13

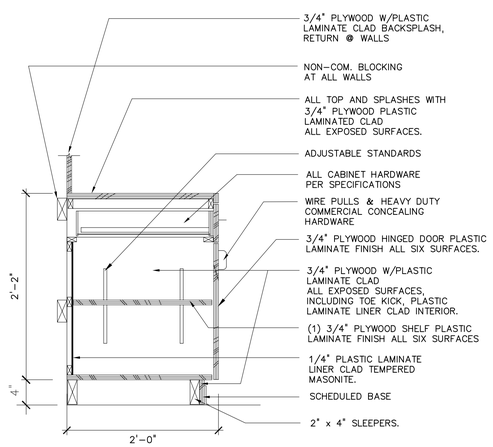

TYPICAL BASE CABINET

1" = 1'-0"

5 / A-13

NOT USED

6 / A-13

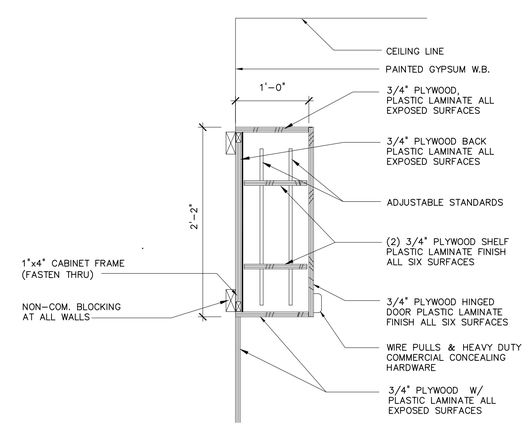

UPPER CABINET

1" = 1'-0"

7 / A-13

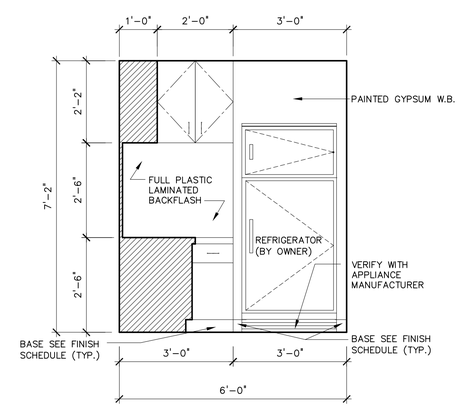

KITCHEN ELEVATION

1/2" = 1'-0"

4 / A-13

RECORD DRAWINGS

CARTAYA & ASSOCIATES ARCHITECTS P.A.

3077 E. COMMERCIAL BLVD. SUITE 201
FT. LAUDERDALE, FLORIDA 33308
771-2724 FAX 776-4280

NO.	DATE	ISSUED FOR	BY
1	01/08	RECORD DRAWINGS	M.C.

DESIGNED M.C.
DRAWN S.A.
CHECKED M.C.
PROJ. ENGR. M.C.

MARIO CARTAYA R.A.
No. AAC001388

HAZEN AND SAWYER
Environmental Engineers & Scientists
4000 Hollywood Boulevard, Suite 750N
Hollywood, Florida 33021
(954) 987-0066

SCALE: VARIOUS

CONTRACT: –
CLIENTS PROJECT:
ENGINEERS PROJECT: 40406
CAD REFERENCE: 40406A

CITY OF HALLANDALE BEACH City of Choice
CITY OF HALLANDALE BEACH
UTILITIES DEPARTMENT

6 MGD MEMBRANE SOFTENING W.T.P.

NF PROCESS BUILDING
INTERIOR ELEVATIONS AND CABINET DETAILS

DATE: JANUARY 2008
SHEET: 102 OF 162
DRAWING: A-13

PLOT DATE: 2/8/2008 4:41 PM BY: AMEDINA

XREFs= E:\2001_Projects\0138\ARCH\0138_X1FL

File = O:\40406\40406-001\Drawings\ARCH\40406A13 Saved by ---- Save date = 2/4/2008 2:46 PM

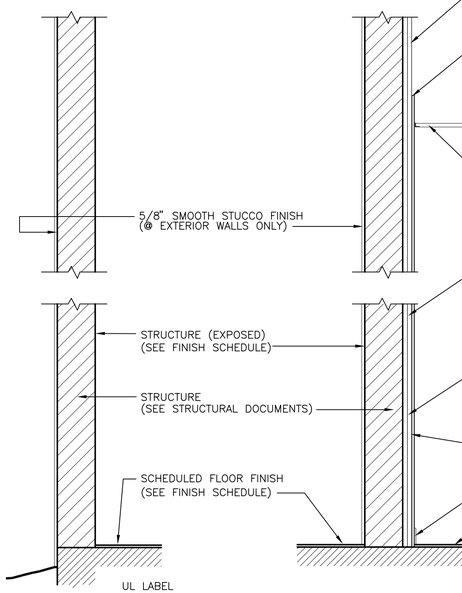

UL LABEL
U 465
(1 HR. RATED)

UL LABEL
U 403
(2 HR. RATED)

1

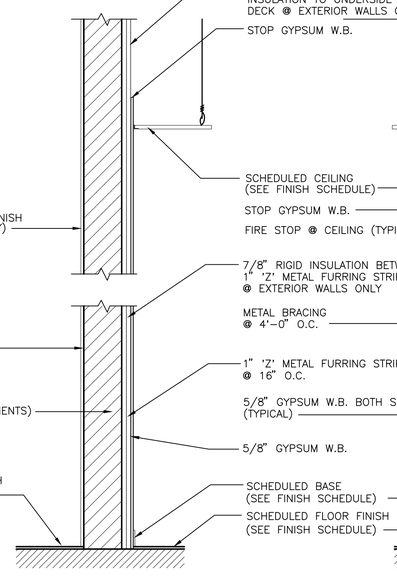

UL LABEL
U 465
(1 HR. RATED)

UL LABEL
U 403
(2 HR. RATED)

2

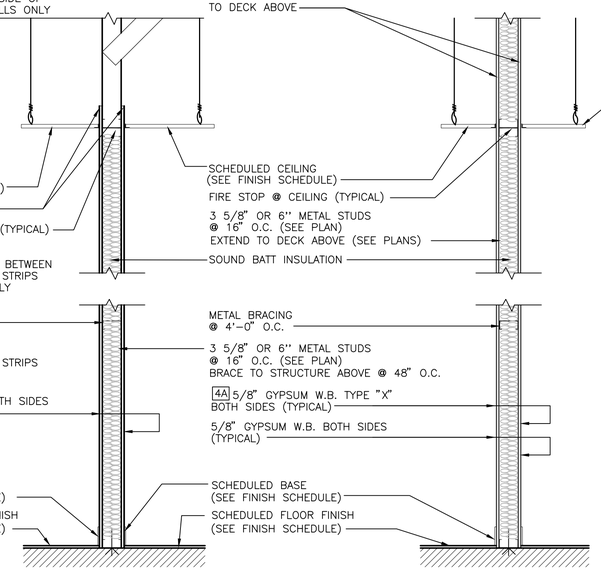

3

4 **4A** UL LABEL
U 465
(1 HR. RATED)

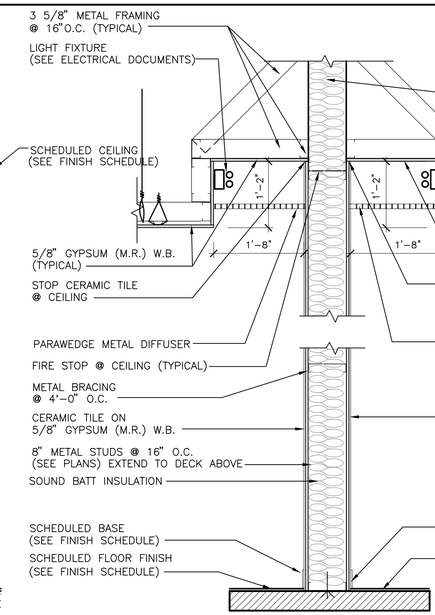

5

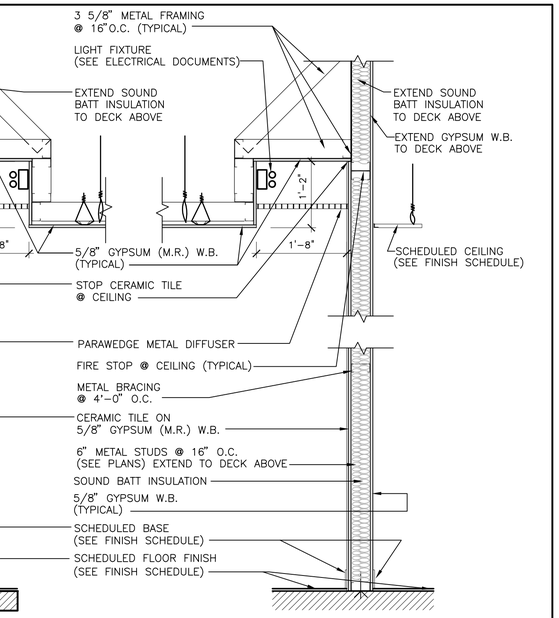

6

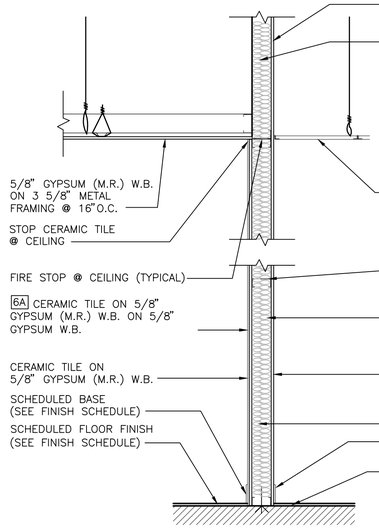

6A **6B** UL LABEL
U 465
(1 HR. RATED)
NOT USED

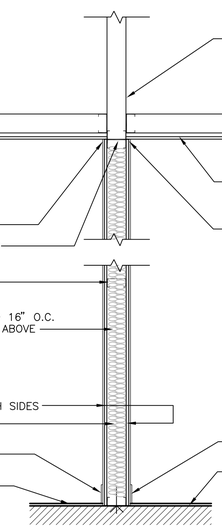

7

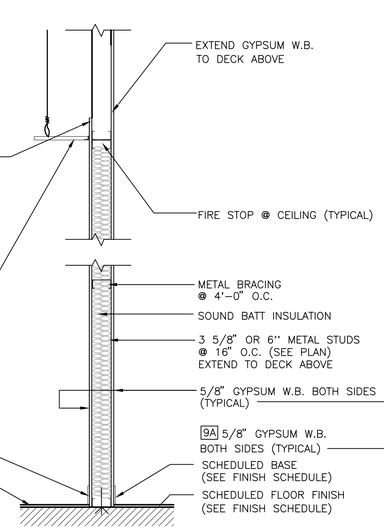

8

NOTE:

1. FIRE CAULK ALL PENETRATIONS THRU FIRE STOPS
2. CLOSE ALL OPENINGS AT FRAMING CONNECTIONS AT FIRE STOPS.

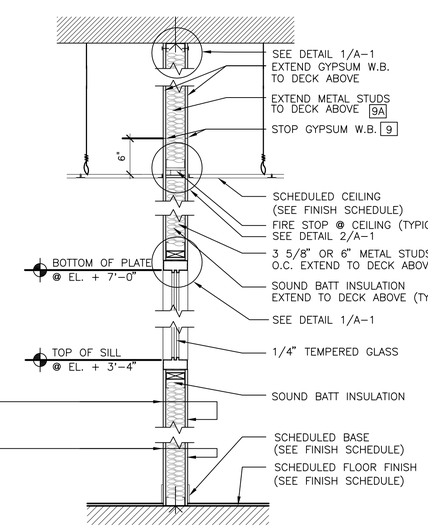

9 **9A** **9B** UL LABEL
U 465
(1 HR. RATED)
NOT USED

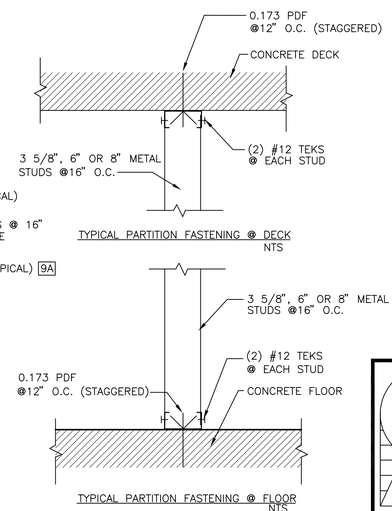

10

TYPICAL FASTENING DETAILS

NOTE:
PDF – POWDER DRIVEN FASTENER

3/4"=1'-0"

6" 0 1 2'

RECORD DRAWINGS

CARTAYA & ASSOCIATES ARCHITECTS P.A.
3077 E. COMMERCIAL BLVD. SUITE 201
FT. LAUDERDALE, FLORIDA 33308
771-2724 FAX 776-4280

NO.	DATE	ISSUED FOR	BY
1	01/09	RECORD DRAWINGS	M.C.

DESIGNED M.C.
DRAWN S.A.
CHECKED M.C.
PROJ. ENGR. M.C.

MARIO CARTAYA R.A.
No. AAC001388

HAZEN AND SAWYER
Environmental Engineers & Scientists
4000 Hollywood Boulevard, Suite 750N
Hollywood, Florida 33021
(954) 987-0066

SCALE 3/4" = 1'-0"

CONTRACT: –
CLIENTS PROJECT:
ENGINEERS PROJECT: 40406
CAD REFERENCE: 40406A14

CITY OF HALLANDALE BEACH
UTILITIES DEPARTMENT

6 MGD MEMBRANE SOFTENING W.T.P.

NF PROCESS BUILDING

WALL PARTITIONS

DATE: JANUARY 2008
SHEET: 103 OF 162
DRAWING: A-14

PLOT DATE: 2/8/2008 4:41 PM BY: AMEDINA
XREFs=

File = O:\40406\40406-001\Drawings\ARCH\40406A14 Saved by CARTAYA09 Save date = 2/4/2008 2:46 PM

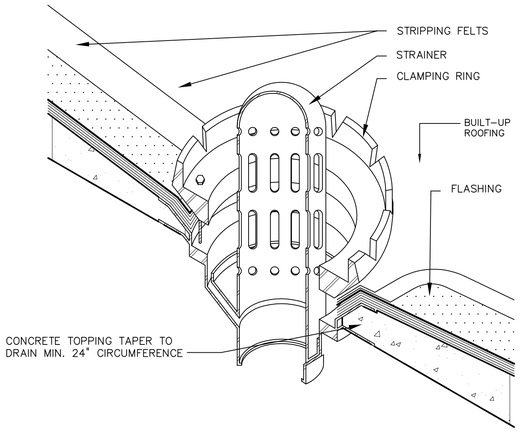

NOTES:

1. MIN. 36" SQ. PRE-FAB METAL FLASHING, SET ON FINISHED ROOFING FELTS IN MASTIC. PRIME TOP SURFACE BEFORE STRIPPING.

2. MEMBRANE PLIES, METAL FLASHING, AND FLASH-IN PLIES EXTEND UNDER CLAMPING RING, STRIPPING MEMBRANE EXTENDS 4" BEYOND EDGE OF FLASHING SHEET, BUT NOT BEYOND EDGE OF SUMP.

3.REFER TO MECHANICAL PLANS FOR ROOF DRAIN SIZES

4. MEMBRANE PLIES, METAL FLASHING, AND FLASH IN PLIES EXRTEND UNDER CLAMPING RING INSTALL ALL MATERIALS INCLUDING CLAMPING RING WHILE ASHPALT IS STILL HOT. EDGE STRIPPING FELTS EXTEND 4" AND 6" BEYOND EDGE OF FLASHING SHEET.

5. DEPRESS ROOF IN 2'-0" RADIUS AROUND DRAIN. (SEE ROOF PLAN)

ROOF DRAIN

N.T.S.

1 / A-15

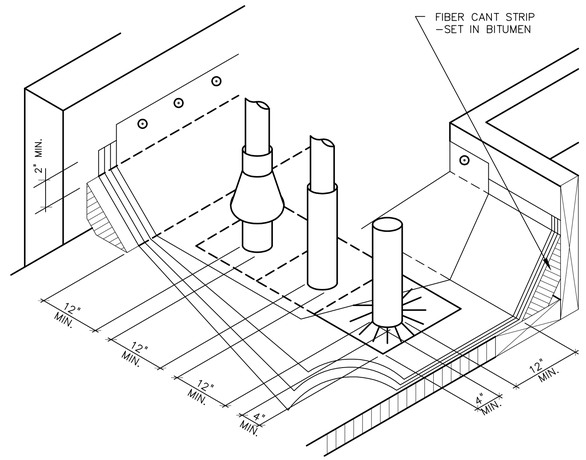

ROOF PENETRATION

N.T.S.

2 / A-15

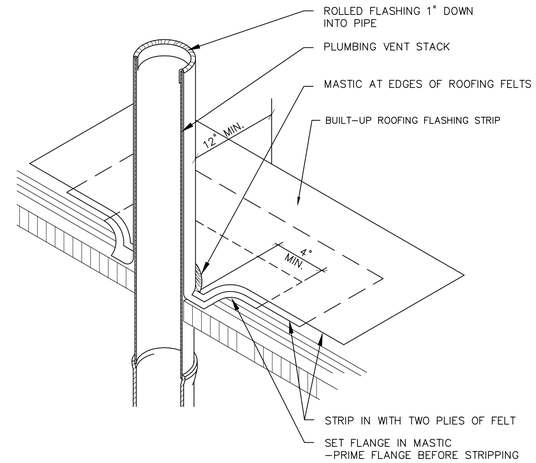

NOTES:

1. SHEET METAL MINIMUM OF 2-1/2-LB PER SQUARE FOOT.

PLUMBING VENT FLUSHING

N.T.S.

3 / A-15

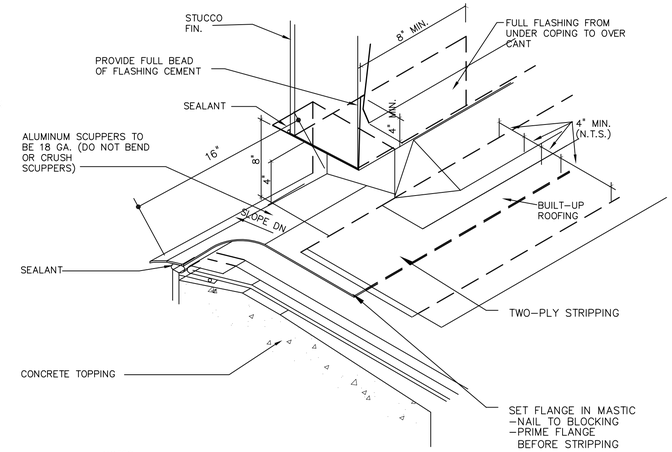

NOTES:

1. PROVIDE METAL FLANGE BEFORE APPLYING STRIPPING

2. 2 x 6 P.T. WOOD NAILERS TO BE 1" LONGER THAN SCUPPER FLANGE 1/2" MIN. EACH SIDE.

3. PROVIDE SHIMES AS NEEDED TO OBTAIN CORRECT ELEVATIONS.

4. ALL CORNERS SHALL BE "FULL CORNERS" AND ALL METAL CONNECTIONS SHALL BE FULLY SOLDERED.

5. SET STUCCO SHOULDER COUNTER FLASHING IN FULL TROWELING OF FLASHING CEMENT BEFORE NAILING TO WALL.

6. ALL ROOF OVERFLOW SCUPPERS SHALL BE PLACED NOT LESS THAN 2" NOR MORE THAN 4" ABOVE THE ROOF DRAIN

OVERFLOW SCUPPER

N.T.S.

4 / A-15

NOTE:
FOR LOCATION OF EMERGENCY OVERFLOW SCUPPERS AND ROOF SCUPPERS SEE PLANS AND STRUCTURAL DOCUMENTS

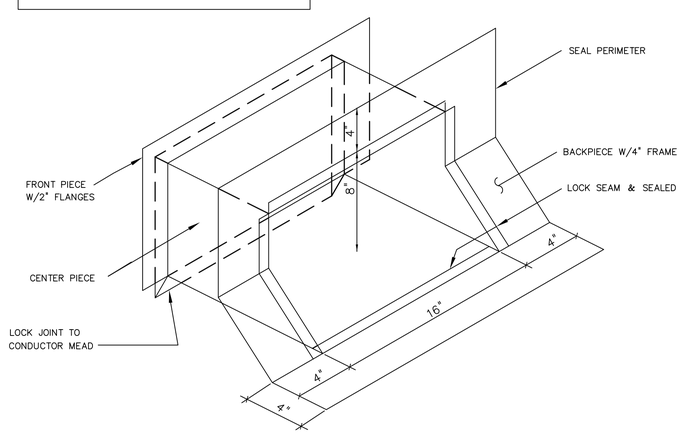

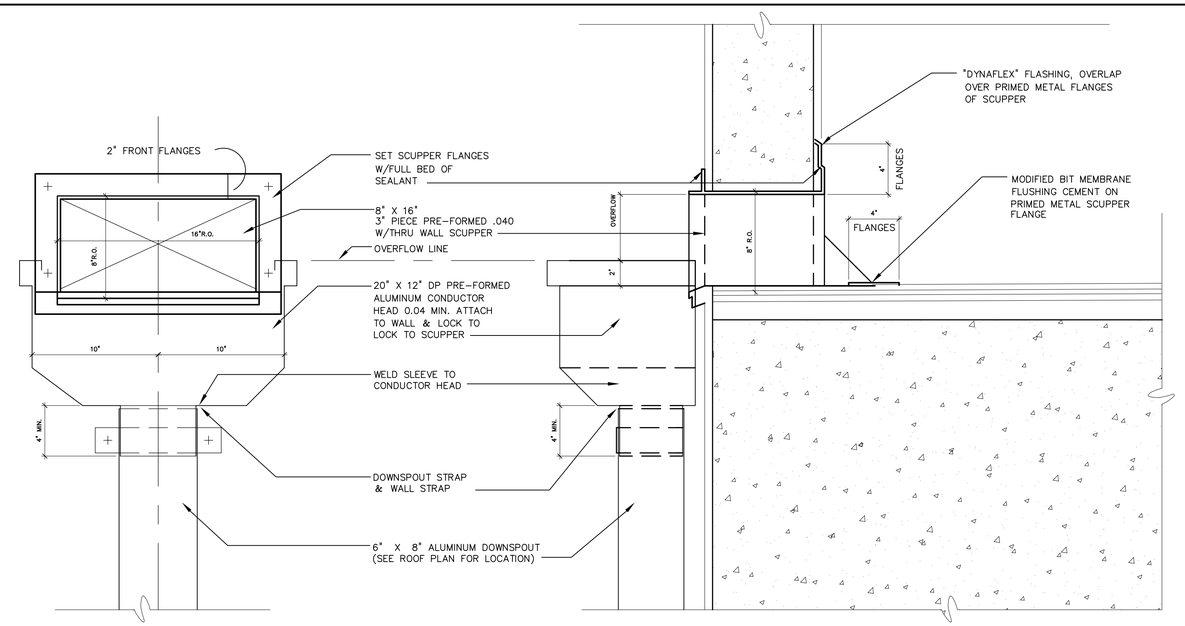

ROOF SCUPPER DETAILS

NOT TO SCALE

5 / A-15

RECORD DRAWINGS

CARTAYA & ASSOCIATES ARCHITECTS P.A.
3077 E. COMMERCIAL BLVD. SUITE 201
FT. LAUDERDALE, FLORIDA 33308
771-2724 FAX 776-4280

NO.	DATE	ISSUED FOR	BY
1	01/08	RECORD DRAWINGS	M.C.

DESIGNED M.C.
DRAWN S.A.
CHECKED M.C.
PROJ. ENGR. M.C.

MARIO CARTAYA R.A.
No. AAC001388

HAZEN AND SAWYER
Environmental Engineers & Scientists
4000 Hollywood Boulevard, Suite 750N
Hollywood, Florida 33021
(954) 987-0066

SCALE N.T.S.

CONTRACT: –
CLIENTS PROJECT:
ENGINEERS PROJECT: 40406
CAD REFERENCE: 40406A15

CITY OF HALLANDALE BEACH City of Choice
CITY OF HALLANDALE BEACH
UTILITIES DEPARTMENT

6 MGD MEMBRANE SOFTENING W.T.P.

NF PROCESS BUILDING

ROOF DETAILS

DATE: JANUARY 2008
SHEET: 104 OF 162
DRAWING: A-15

PLOT DATE: 2/6/2008 4:41 PM BY: AMEDINA

XREFs=

File = O:\40406\40406-001\Drawings\ARCH\40406A15 Saved by ---- Save date = 2/4/2008 2:46 PM

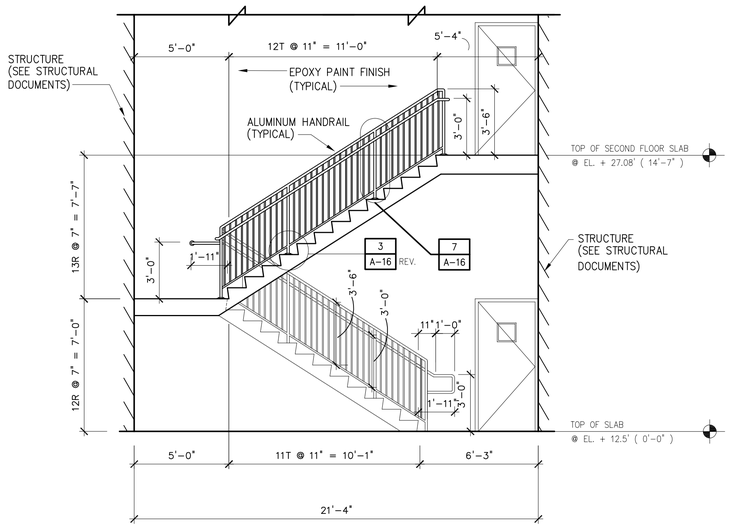

HANDRAIL DETAIL AT STAIR #1

1/4" = 1'-0"

1 / A-16

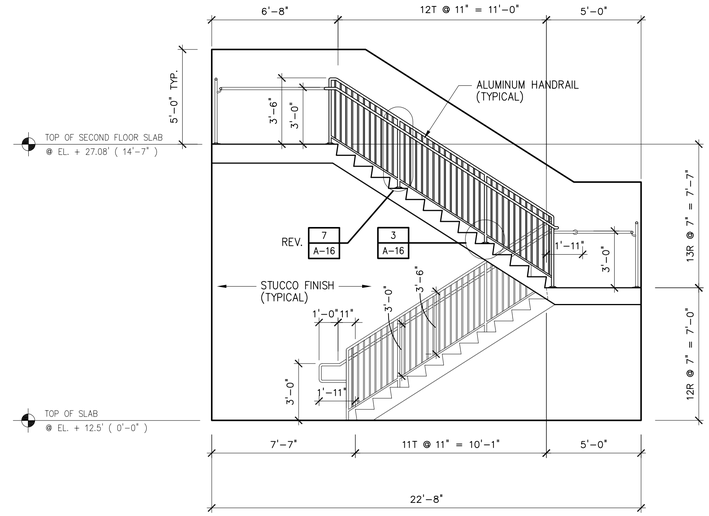

HANDRAIL DETAIL AT STAIR #2

1/4" = 1'-0"

2 / A-16

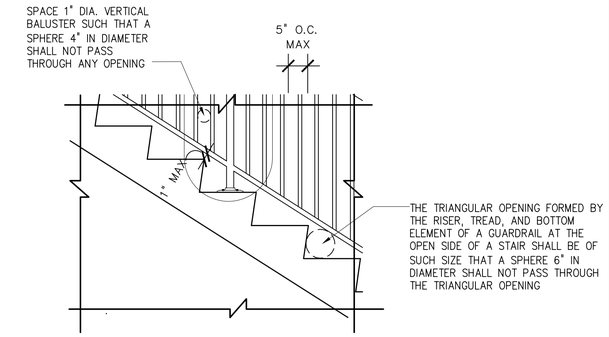

HANDRAIL / BASE DETAIL STAIR #1 & STAIR #2

3/4" = 1'-0"

3 / A-16

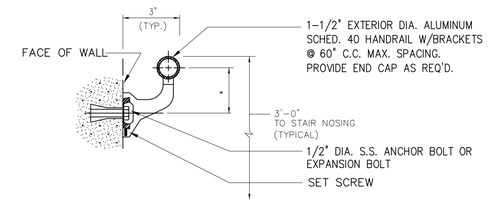

WALL MOUNTED HANDRAIL

1-1/2" = 1'-0"

8 / A-16

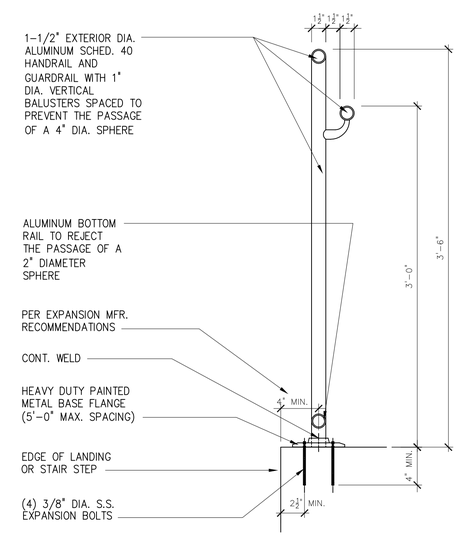

HAND / GUARDRAIL DETAIL STAIR #1 & STAIR #2

1-1/2" = 1'-0"

7 / A-16

RECORD DRAWINGS

CARTAYA & ASSOCIATES ARCHITECTS P.A.

3077 E. COMMERCIAL BLVD. SUITE 201
FT. LAUDERDALE, FLORIDA 33308
771-2724 FAX 776-4280

NO.	DATE	ISSUED FOR	BY
1	01/08	RECORD DRAWINGS	M.C.

DESIGNED M.C.
DRAWN S.A.
CHECKED M.C.
PROJ. ENGR. M.C.

MARIO CARTAYA R.A.
No. AAC001388

HAZEN AND SAWYER
Environmental Engineers & Scientists
4000 Hollywood Boulevard, Suite 750N
Hollywood, Florida 33021
(954) 987-0066

SCALE: VARIOUS

CONTRACT: –
CLIENTS PROJECT:
ENGINEERS PROJECT: 40406
CAD REFERENCE: 40406A

CITY OF HALLANDALE BEACH
UTILITIES DEPARTMENT

6 MGD MEMBRANE SOFTENING W.T.P.

NF PROCESS BUILDING

STAIR DETAILS

DATE: JANUARY 2008
SHEET: 105 OF 162
DRAWING: A-16

PLOT DATE: 2/6/2008 4:41 PM BY: AMEDINA

XREFs:

File = O:\40406\40406-001\Drawings\ARCH\40406A16 Saved by CARTAYA09 Save date = 2/4/2008 2:46 PM

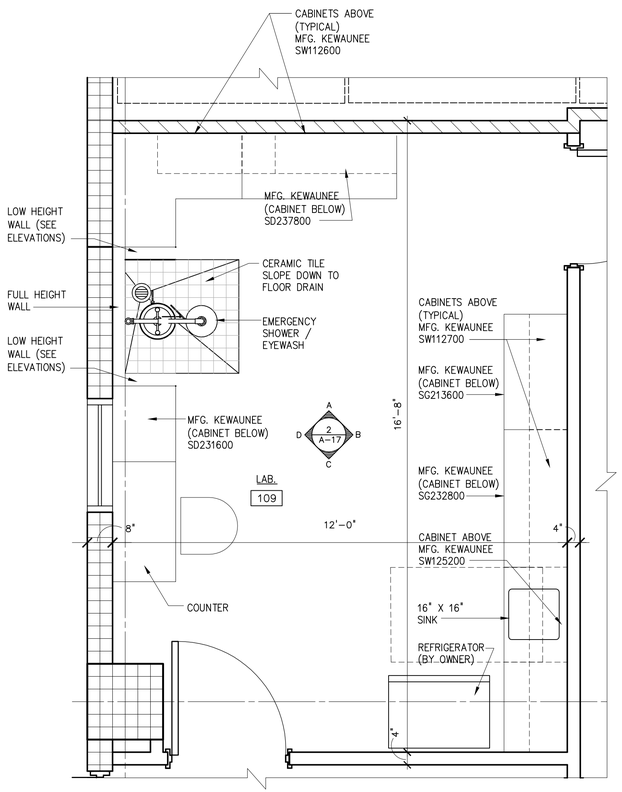

ENLARGED LABORATORY FLOOR PLAN

1/2"=1'-0"

1 / A-17

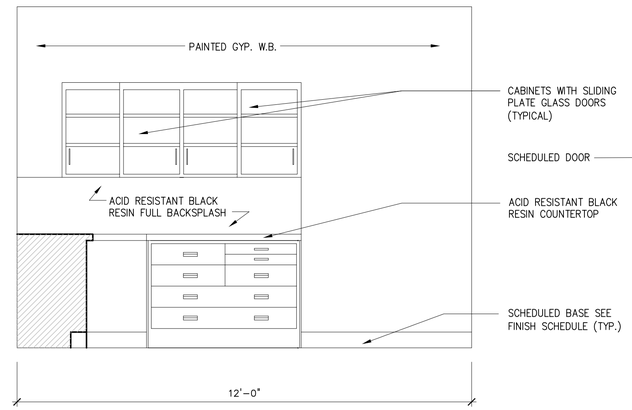

INTERIOR ELEVATION A

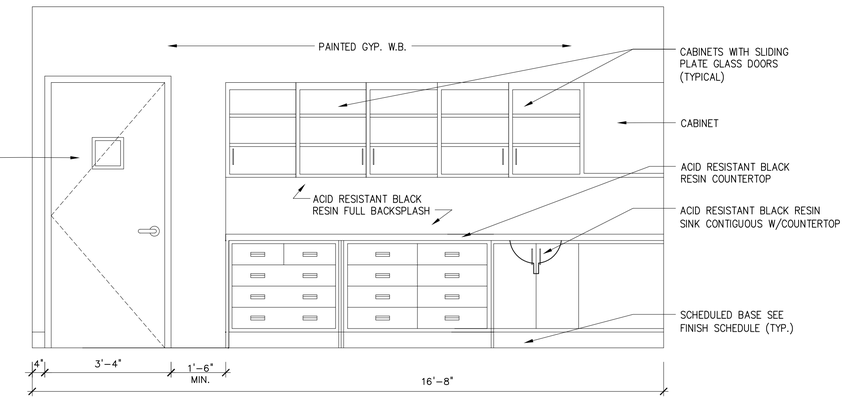

INTERIOR ELEVATION B

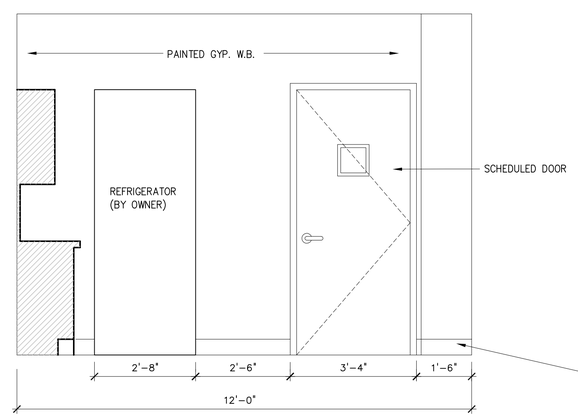

INTERIOR ELEVATION C

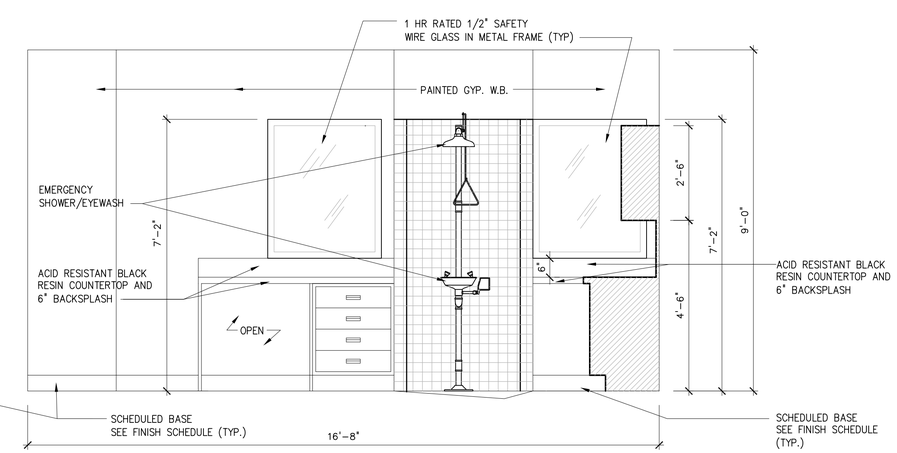

INTERIOR ELEVATION D

LABORATORY INTERIOR ELEVATIONS

1/2"=1'-0"

2 / A-17

RECORD DRAWINGS

CARTAYA & ASSOCIATES ARCHITECTS P.A.

3077 E. COMMERCIAL BLVD. SUITE 201
FT. LAUDERDALE, FLORIDA 33308
771-2724 FAX 776-4280

1/8"=1'-0"

8 6 4 2 0 8'

NO.	DATE	ISSUED FOR	BY
1	01/08	RECORD DRAWINGS	M.C.

DESIGNED M.C.
DRAWN S.A.
CHECKED M.C.
PROJ. ENGR. M.C.

MARIO CARTAYA R.A.
No. AAC001388

HAZEN AND SAWYER
Environmental Engineers & Scientists
4000 Hollywood Boulevard, Suite 750N
Hollywood, Florida 33021
(954) 987-0066

SCALE 1/2" = 1'-0"

CONTRACT: –
CLIENTS PROJECT:
ENGINEERS PROJECT: 40406
CAD REFERENCE: 40406A-17

CITY OF HALLANDALE BEACH City of Choice
CITY OF HALLANDALE BEACH
UTILITIES DEPARTMENT

6 MGD MEMBRANE SOFTENING W.T.P.

NF PROCESS BUILDING
ENLARGED LABORATORY
FLOOR PLAN AND ELEVATIONS

DATE: JANUARY 2008
SHEET: 106 OF 162
DRAWING: A-17

PLOT DATE: 2/8/2008 4:41 PM BY: AMEDINA

XREFs= O:\40406\40406-001\Drawings\200\PT-P1-AB

File = O:\40406\40406-001\Drawings\ARCH\40406A17 Saved by ---- Save date = 2/5/2008 9:05 AM

LEGEND

- 8", 10" OR 12" CONCRETE MASONRY WALL (SEE STRUCTURAL DOCUMENTS FOR TIE COLUMNS AND FILL CELL LOCATIONS)
- 4 — PARTITION WALL SEE SHEET A-14 FOR TYPE
- 101 — INDICATES ROOM NUMBER SEE FINISH SCHEDULE SHT. A-10
- 1-1 — INDICATES DOOR NUMBER SEE DOOR SCHEDULE A-12
- A A-1 — INDICATES SECTIONS
- FE: SURFACE MTD FIRE EXTINGUISHER CABINET

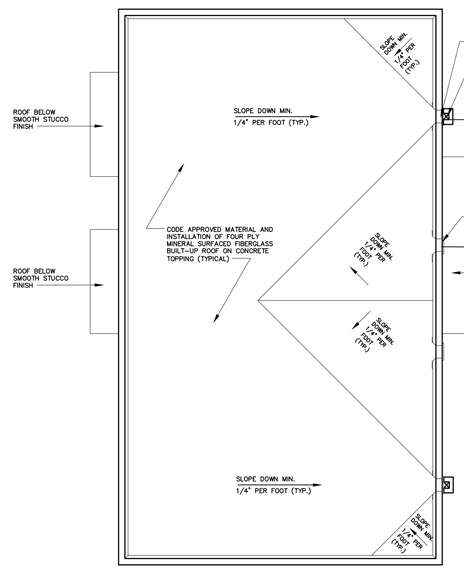

GENERATOR ROOF PLAN

1/8"=1'-0"

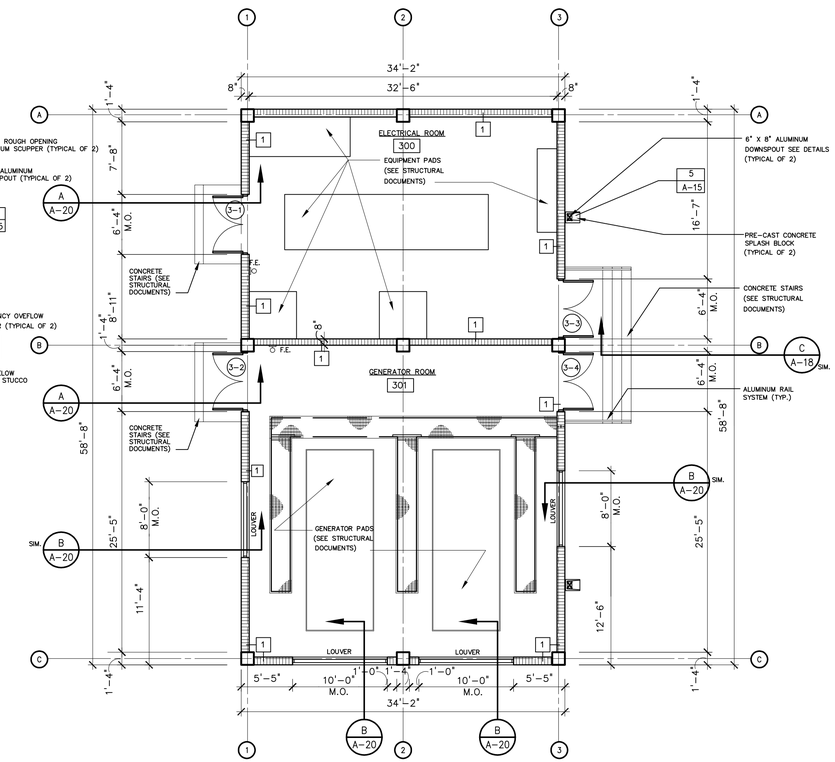

GENERATOR FLOOR PLAN

1/8"=1'-0"

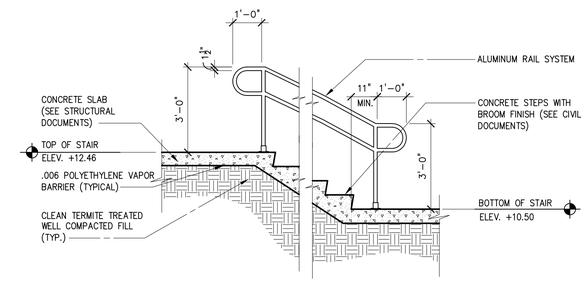

C A-18 STAIR DETAIL

3/8"=1'-0"

(NOT USED)
FOR EMERGENCY
GENERATOR BUILDING

RECORD DRAWINGS

CARTAYA & ASSOCIATES ARCHITECTS P.A.

3077 E. COMMERCIAL BLVD. SUITE 201
FT. LAUDERDALE, FLORIDA 33308
771-2724 FAX 776-4280

1/8"=1'-0" 8 6 4 2 0 8'

NO.	DATE	ISSUED FOR	BY
1	01/08	RECORD DRAWINGS	M.C.

DESIGNED M.C.
DRAWN S.A.
CHECKED M.C.
PROJ. ENGR. M.C.

MARIO CARTAYA R.A.
No. AAC001388

HAZEN AND SAWYER
Environmental Engineers & Scientists
4000 Hollywood Boulevard, Suite 750N
Hollywood, Florida 33021
(954) 987-0066

SCALE 1/8" = 1'-0"

CONTRACT: –
CLIENTS PROJECT:
ENGINEERS PROJECT: 40406
CAD REFERENCE: 40406A16

CITY OF HALLANDALE BEACH City of Choice
CITY OF HALLANDALE BEACH
UTILITIES DEPARTMENT

6 MGD MEMBRANE SOFTENING W.T.P.

EMERGENCY GENERATOR BUILDING

FLOOR AND ROOF PLANS

DATE: JANUARY 2008
SHEET: 107 OF 162
DRAWING: A-18

PLOT DATE: 2/8/2008 4:42 PM BY: AMEDINA

XREFs= O:\40406\40406-001\Drawings\200\GB-PT-AB

File = O:\40406\40406-001\Drawings\ARCH\40406A18 Saved by ---- Save date = 2/5/2008 9:06 AM

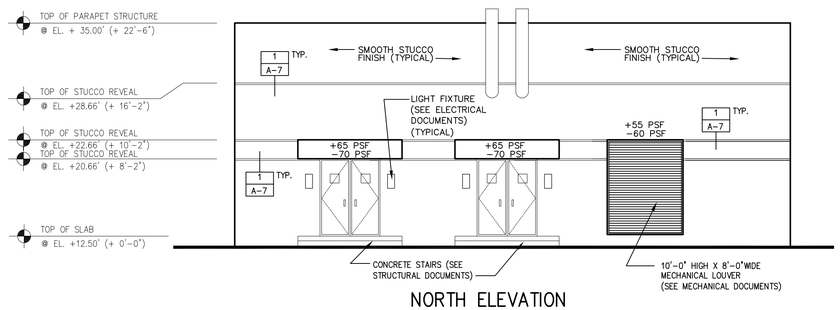

NORTH ELEVATION

1/8"=1'-0"

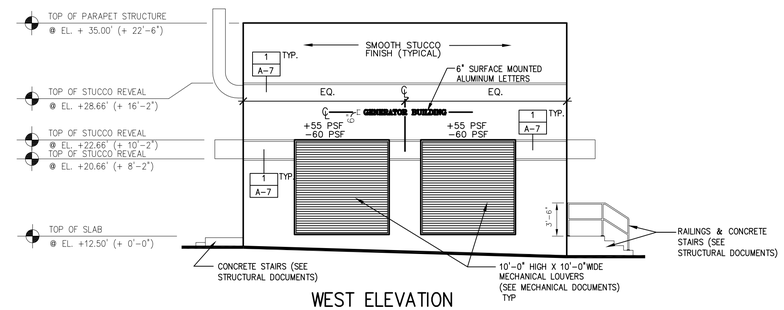

WEST ELEVATION

1/8"=1'-0"

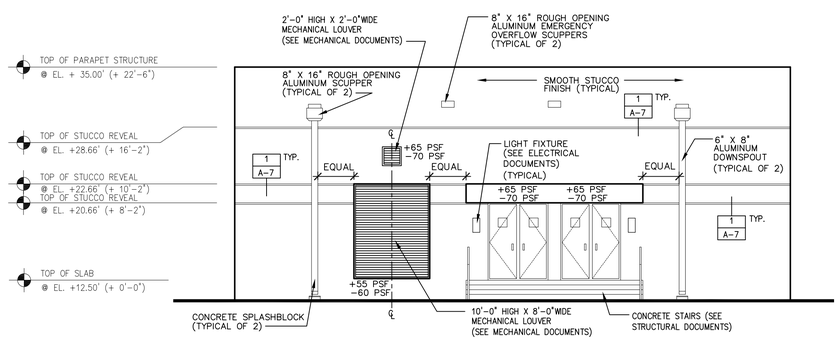

SOUTH ELEVATION

1/8"=1'-0"

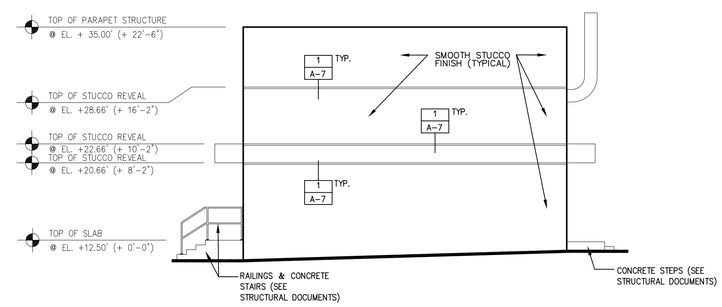

EAST ELEVATION

1/8"=1'-0"

RECORD DRAWINGS

CARTAYA & ASSOCIATES ARCHITECTS P.A.

3077 E. COMMERCIAL BLVD. SUITE 201
FT. LAUDERDALE, FLORIDA 33308
771-2724 FAX 776-4280

1/8"=1'-0" 8 6 4 2 0 8'

NO.	DATE	ISSUED FOR	BY
1	01/08	RECORD DRAWINGS	M.C.

DESIGNED M.C.
DRAWN S.A.
CHECKED M.C.
PROJ. ENGR. M.C.

MARIO CARTAYA R.A.
No. AAC001388

HAZEN AND SAWYER
Environmental Engineers & Scientists
4000 Hollywood Boulevard, Suite 750N
Hollywood, Florida 33021
(954) 987-0066

SCALE 1/8" = 1'-0"

CONTRACT: –
CLIENTS PROJECT:
ENGINEERS PROJECT: 40406
CAD REFERENCE: 40406A17

CITY OF HALLANDALE BEACH City of Choice
CITY OF HALLANDALE BEACH
UTILITIES DEPARTMENT

6 MGD MEMBRANE SOFTENING W.T.P.

EMERGENCY GENERATOR BUILDING
ELEVATIONS

DATE: JANUARY 2008
SHEET: 108 OF 162
DRAWING: A-19

PLOT DATE: 2/8/2008 4:42 PM BY: AMEDINA

XREFs=

File = O:\40406\40406-001\Drawings\ARCH\40406A19 Saved by ---- Save date = 2/4/2008 2:45 PM

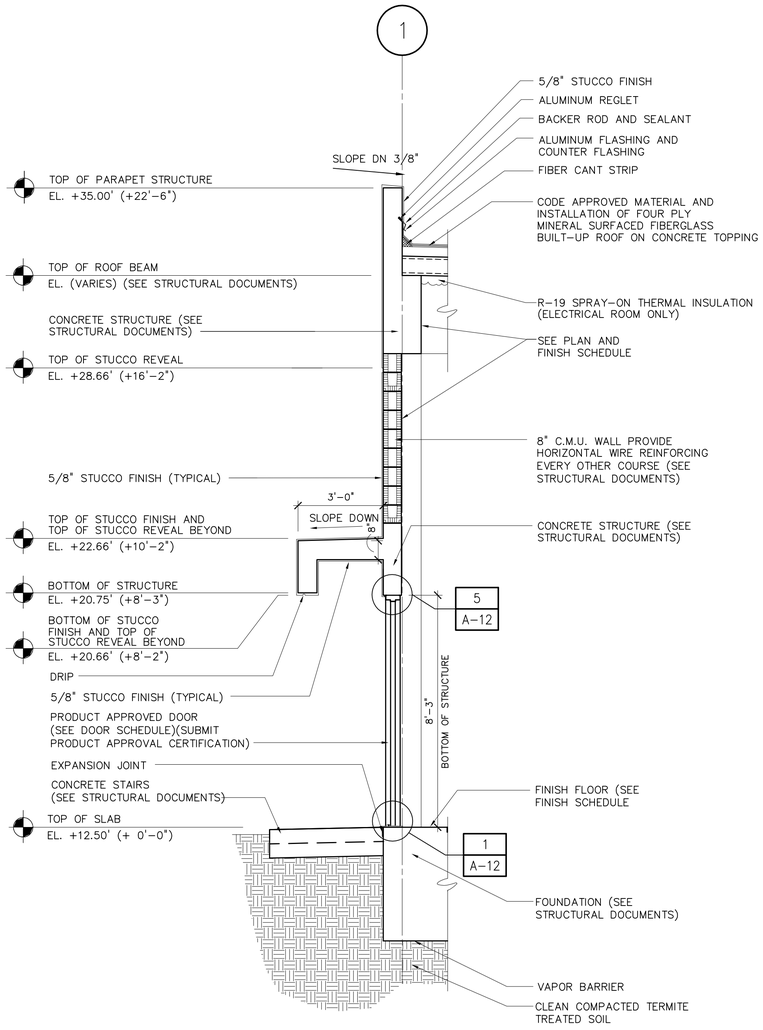

WALL SECTION A A-20
3/8"=1'-0"

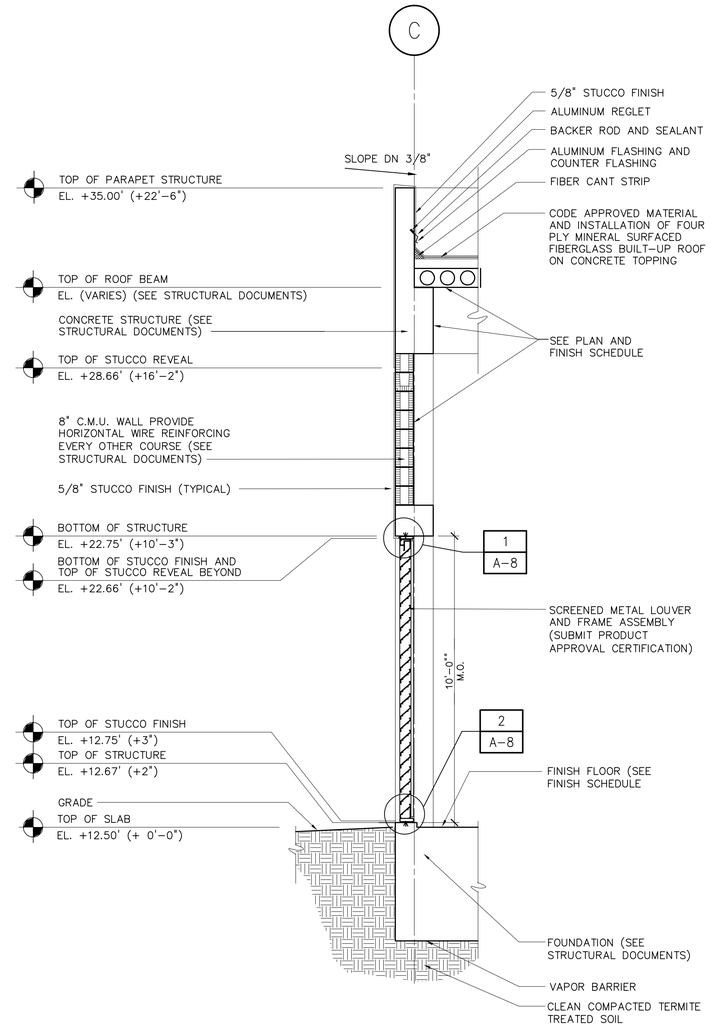

WALL SECTION B A-20
3/8"=1'-0"

RECORD DRAWINGS

CARTAYA & ASSOCIATES ARCHITECTS P.A.
3077 E. COMMERCIAL BLVD. SUITE 201
FT. LAUDERDALE, FLORIDA 33308
771-2724 FAX 776-4280

1/8"=1'-0" 8 6 4 2 0 8'

NO.	DATE	ISSUED FOR	BY
1	01/08	RECORD DRAWINGS	M.C.

DESIGNED M.C.
DRAWN S.A.
CHECKED M.C.
PROJ. ENGR. M.C.

MARIO CARTAYA R.A.
No. AAC001388

HAZEN AND SAWYER
Environmental Engineers & Scientists
4000 Hollywood Boulevard, Suite 750N
Hollywood, Florida 33021
(954) 987-0066

SCALE 3/8" = 1'-0"

CONTRACT: –
CLIENTS PROJECT:
ENGINEERS PROJECT: 40406
CAD REFERENCE: 40406A17

CITY OF HALLANDALE BEACH City of Choice
CITY OF HALLANDALE BEACH
UTILITIES DEPARTMENT

6 MGD MEMBRANE SOFTENING W.T.P.

EMERGENCY GENERATOR BUILDING
SECTIONS

DATE: JANUARY 2008
SHEET: 109 OF 162
DRAWING: A-20

PLOT DATE: 2/8/2008 4:43 PM BY: AMEDINA

XREFs= O:\40406\40406-001\Drawings\200\GB-PT-AB

File = O:\40406\40406-001\Drawings\ARCH\40406A20 Saved by ---- Save date = 2/5/2008 9:07 AM

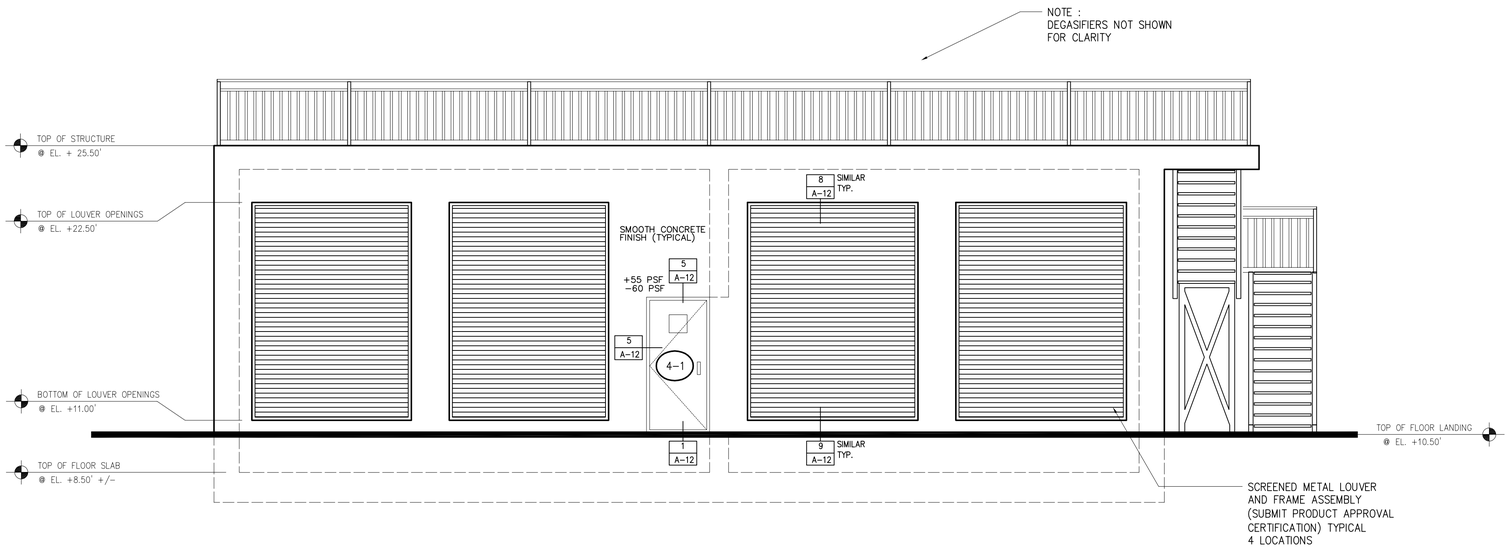

EAST ELEVATION

1/4"=1'-0"

DOOR SCHEDULE

SYMBOL	NO.	SIZE	DOOR MATERIAL	DOOR ELEV.	FRAME MATERIAL	FRAME ELEV.	THRESHOLD	CLOSER	REMARKS
4-1	4-1	3'-0" x 7'-0"x 1 3/4 (DOOR)	H.M.	B	H.M.	1	ALUMINUM	YES	(NOTE # 8 & #9)

GENERAL NOTES - DOORS SCHEDULE

1 – ALL HOLLOW METAL & WOOD DOORS AND FRAMES, SHALL BE PAINTED CUSTOM COLOR AS SELECTED BY ARCHITECT.

2 – ALL ALUMINUM DOORS AND STOREFRONT FRAMES, SHALL BE CUSTOM COLOR FACTORY APPLIED AS SELECTED BY ARCHITECT.

3 – ALL EXTERIOR LOUVERED DOORS SHALL HAVE INSECT SCREEN.

4 – REFER TO MECHANICAL PLANS FOR AIR TRANSFER GRILLES MOUNTED ON DOORS.

5 – ALL DOOR HANDLES SHALL BE LEVER TYPE UNLESS OTHERWISE NOTED.

6 – M.O. – MASONRY OPENING

7 – SUBMIT PRODUCT APPROVAL FORMS ON ALL EXTERIOR DOOR AND FRAME ASSEMBLIES

8 – DISPLAY A SIGN, PERMANENTLY AFFIXED TO WALL ADJACENT TO DOOR WITH RED LETTERS AT LEAST 1" HIGH WITH THE FOLLOWING TEXT: "FIRE DOOR DO NOT OBSTRUCT"

9 – THE USE OF A KEY OR THUMB LOCKING DEVICE ON EGRESS DOORS WILL NOT BE PERMITTED

10 – FIRE DOORS SHALL BE INSTALLED IN ACCORDANCE WITH NFPA 80 STANDARD FOR FIRE DOORS AND FIRE WINDOWS 1999 EDITION.

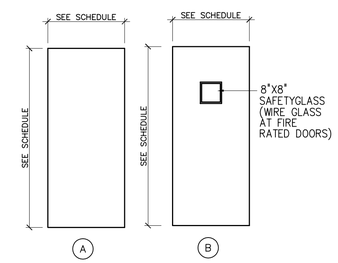

DOOR TYPES

SCALE: N.T.S.

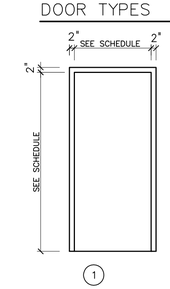

FRAME TYPES

SCALE: N.T.S.

FINISH SCHEDULE

	NO.	ROOM /AND OR AREA	FLOOR	BASE	WALL	CEILING	CLG HIGH	REMARKS
DEGASIFIER STRUCTURE BUILDING		SEQUESTRANT ROOM	SEALED CONC.	NONE	EPOXY PAINT ON CONCRETE	EPOXY PAINT ON EXP. STRUCTURE	EXP. STR.	
		SODIUM HYDROXIDE ROOM	SEALED CONC.	NONE	EPOXY PAINT ON CONCRETE	EPOXY PAINT ON EXP. STRUCTURE	EXP. STR.	
		DEGASIFIER SUMP	NONE	NONE	XYPEX WATERPROOFING	NONE	EXP. STR.	
		CONCRETE TOP OF STRUCTURE	SEALED CONC.	N/A	N/A	N/A	N/A	
		EXTERIOR WALLS OF STRUCTURE (ALL AROUND)	N/A	NONE	EPOXY PAINT ON CONCRETE	N/A	N/A	

1/4"=1'-0"

1 0 1 2 3 7'

NO.	DATE	ISSUED FOR	BY
3	01/08	RECORD DRAWING	P.A.D.
2	10/03	BID SET	S.J.
1	10/03	BLDG. DEPT. REVISIONS	S.J.

DESIGNED S.J.
DRAWN D.J.R.
CHECKED S.J.
PROJ. ENGR. P.A.D.

SHAJAN JOYKUTTY P.E.
No. 43323

HAZEN AND SAWYER
Environmental Engineers & Scientists
4000 Hollywood Boulevard, Suite 750N
Hollywood, Florida 33021
Certificate of Authorization Number: 2771

SCALE: AS NOTED

CONTRACT: –
CLIENTS PROJECT:
ENGINEERS PROJECT: 40406
CAD REFERENCE: 40406A21

CITY OF HALLANDALE BEACH
City of Choice
CITY OF HALLANDALE BEACH
UTILITIES DEPARTMENT

6 MGD MEMBRANE SOFTENING W.T.P.

DEGASIFIER STRUCTURE
ELEVATIONS AND DETAILS

DATE: JANUARY 2008
SHEET: 110 OF 162
DRAWING: A-21

RECORD DRAWING

PLOT DATE: 2/8/2008 4:43 PM BY: AMEDINA

XREFs= PLOT DATE 10/03/03 11:23am FILE= H:\40406\ARCH\40406A21 by DRIST XREF FILE = NONE

File = O:\40406\40406-001\Drawings\ARCH\40406A21 Saved by GDIAZ Save date = 2/7/2008 2:37 PM

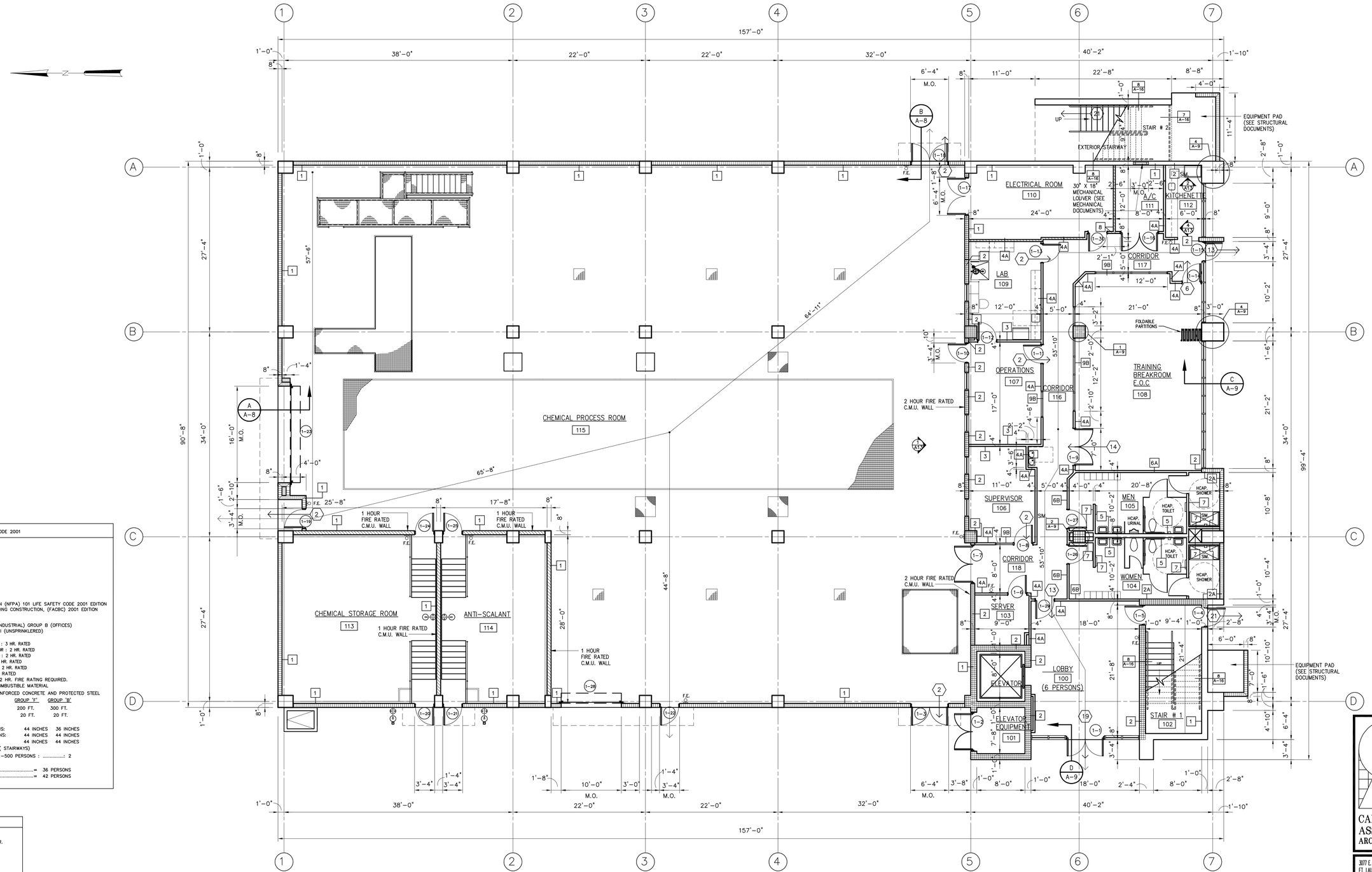

LIFE SAFETY NOTES: FLORIDA BUILDING CODE 2001

DATA INFORMATION:
TWO STORY BUILDING

GROSS BUILDING AREAS:
10,119 SQ. FT. – GROUP "F"
3,531 SQ. FT. – GROUP "B"
13,650 SQ. FT. – TOTAL 1st. FLOOR

APPLICABLE CODES:
–FLORIDA BUILDING CODE 2001 EDITION
–NATIONAL FIRE PROTECTION ASSOCIATION (NFPA) 101 LIFE SAFETY CODE 2001 EDITION
–FLORIDA ACCESSIBILITY CODE FOR BUILDING CONSTRUCTION, (FACBC) 2001 EDITION

CODE RESEARCH
1. CHAPTER 3: INDUSTRIAL: GROUP 'F' (INDUSTRIAL) GROUP B (OFFICES)
2. TABLE 500: TYPE OF CONSTRUCTION: II (UNSPRINKLERED)
3. CHAPTER 6: CONSTRUCTION TYPE
   A. BEARING WALLS/COLUMNS FIRST FLOOR : 3 HR. RATED
   B. BEARING WALLS/COLUMNS SECOND FLOOR : 2 HR. RATED
   C. BEARING WALLS/COLUMNS THIRD FLOOR : 2 HR. RATED
   D. BEAMS & GRDERS SECOND FLOOR : 3 HR. RATED
   E. FLOOR AND FLOOR CEILING ASSEMBLY : 2 HR. RATED
   F. ROOF/CEILING/ASSEMBLY : 1 HR. RATED
4. OCCUPANCY SEPARATION: FBC 704.1: 2 HR. FIRE RATING REQUIRED.
5. 606: STRUCTURAL MEMBERS: NON– COMBUSTIBLE MATERIAL
   STRUCTURAL FRAME SHALL BE REINFORCED CONCRETE AND PROTECTED STEEL
6. TABLE 1004: TRAVEL DISTANCES:

	GROUP 'F'	GROUP 'B'
• MAX. TRAVEL DISTANCE TO EXIT:	200 FT.	300 FT.
• MAX. DEAD END CORRIDOR:	20 FT.	20 FT.
• MINIMUM CORRIDOR WIDTH:		
• LESS THAN 50 PERSONS:	44 INCHES	36 INCHES
• MORE THAN 50 PERSONS:	44 INCHES	44 INCHES
• MINIMUM STAIR WIDTH:	44 INCHES	44 INCHES

7. 1004.2.2 MINIMUM NUMBER OF EXITS (STAIRWAYS)
   • OCCUPANCY LOAD PER STORY : 1–500 PERSONS : .....: 2
8. TABLE 1003.1: OCCUPANT LOAD:
   • FIRST FLOOR:.....= 36 PERSONS
   • SECOND FLOOR:.....= 42 PERSONS

LEGEND

	1 HR. FIRE RATED PARTITION WITH 3/4 HR. RATED DOORS/FRAMES
	2 HR. FIRE RATED WALL WITH 1 3/4 HR. RATED DOORS/FRAMES
X	EGRESS NUMBER OF PERSON

FIRST FLOOR LIFE SAFETY PLAN

1/8"=1'-0"

CARTAYA & ASSOCIATES ARCHITECTS P.A.
3077 E. COMMERCIAL BLVD. SUITE 201
FT. LAUDERDALE, FLORIDA 33308
771-2724 FAX 776-4280

NO.	DATE	ISSUED FOR	BY
1	01/08	RECORD DRAWINGS	M.C.

DESIGNED M.C.
DRAWN S.A.
CHECKED M.C.
PROJ. ENGR. M.C.

MARIO CARTAYA R.A.
No. AAC001388

HAZEN AND SAWYER
Environmental Engineers & Scientists
4000 Hollywood Boulevard, Suite 750N
Hollywood, Florida 33021
(954) 987-0066

SCALE 1/8" = 1'-0"

CONTRACT: –
CLIENTS PROJECT:
ENGINEERS PROJECT: 40406
CAD REFERENCE: 40406A-01

CITY OF HALLANDALE BEACH
UTILITIES DEPARTMENT

6 MGD MEMBRANE SOFTENING W.T.P.
NF PROCESS BUILDING
FIRST FLOOR LIFE SAFETY PLAN

DATE: JANUARY 2008
SHEET: 90 OF 162
DRAWING: LS-1

PLOT DATE: 2/8/2008 4:44 PM BY: AMEDINA
XREFs= O:\40406\40406-001\Drawings\200\PT-P1-AB
File = O:\40406\40406-001\Drawings\ARCH\40406LS1 Saved by ---- Save date = 2/5/2008 9:08 AM

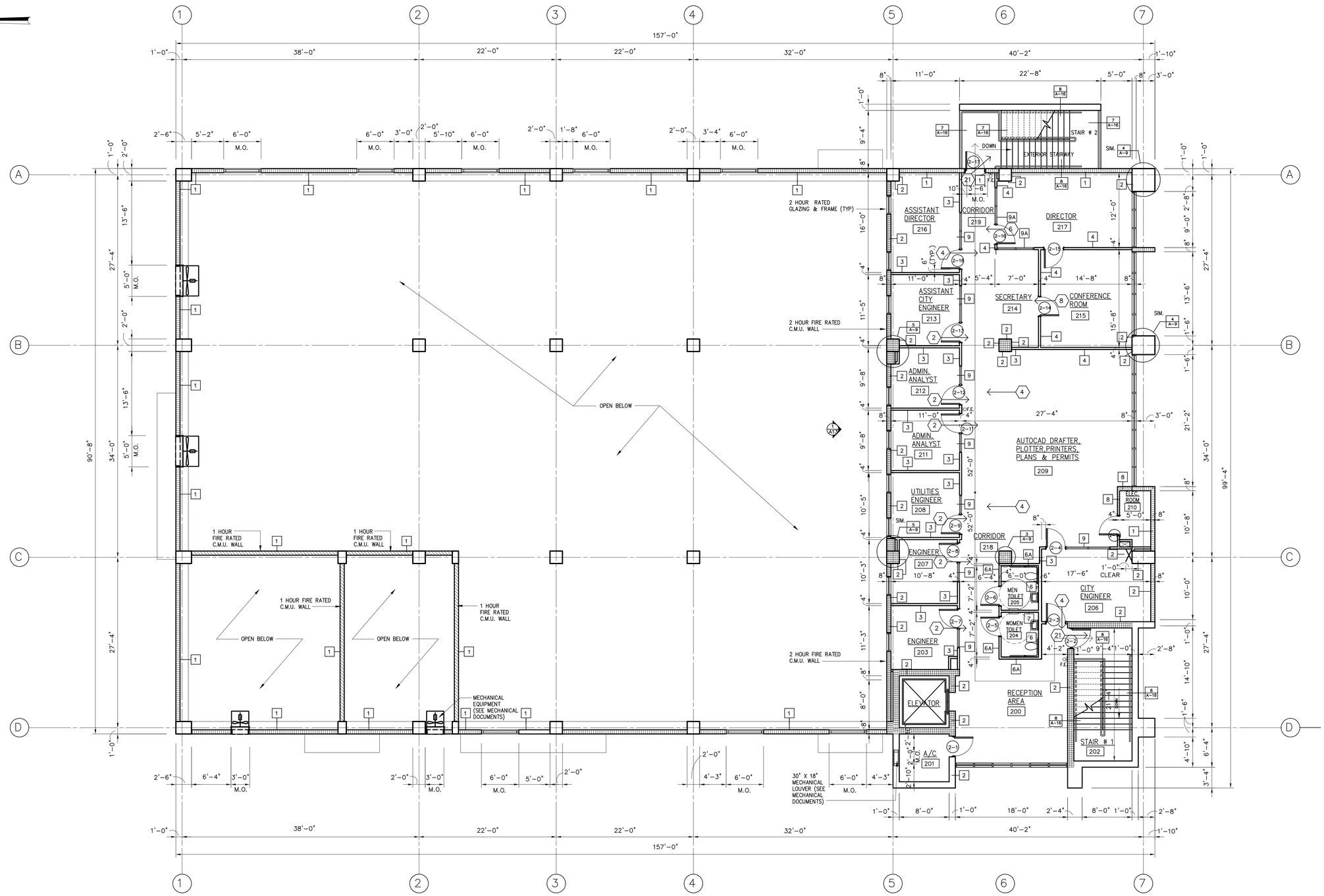

SECOND FLOOR LIFE SAFETY PLAN

1/8"=1'-0"

1/8"=1'-0"

CARTAYA & ASSOCIATES ARCHITECTS P.A.

3077 E. COMMERCIAL BLVD. SUITE 201
FT. LAUDERDALE, FLORIDA 33308
771-2724 FAX 776-4280

RECORD DRAWINGS

NO.	DATE	ISSUED FOR	BY
1	01/08	RECORD DRAWINGS	MJC

DESIGNED M.C.
DRAWN S.A.
CHECKED M.C.
PROJ. ENGR. M.C.

MARIO CARTAYA R.A.
No. AAC001388

HAZEN AND SAWYER
Environmental Engineers & Scientists
4000 Hollywood Boulevard, Suite 750N
Hollywood, Florida 33021
(954) 987-0066

SCALE 1/8" = 1'-0"

CONTRACT: –
CLIENTS PROJECT:
ENGINEERS PROJECT: 40406
CAD REFERENCE: 40406A02

CITY OF HALLANDALE BEACH
UTILITIES DEPARTMENT

6 MGD MEMBRANE SOFTENING W.T.P.

NF PROCESS BUILDING

SECOND FLOOR LIFE SAFETY PLAN

DATE: JANUARY 2008
SHEET: 91 OF 162
DRAWING: LS-2

PLOT DATE: 2/8/2008 4:37 PM BY: AMEDINA

XREFs= O:\40406\40406-001\Drawings\200\PT-P2-AB

File = O:\40406\40406-001\Drawings\ARCH\40406LS2 Saved by ---- Save date = 2/5/2008 9:10 AM

ELECTRICAL PLAN/LAYOUT

SYMBOL	DESCRIPTION
	TERMINAL JUNCTION BOX
	ELECTRICAL EQUIPMENT
	CEILING MOUNTED DOWNLIGHT LUMINAIRE – SEE SCHEDULE FOR TYPE
	FLOURESCENT LUMINAIRE, SURFACE OR LAY IN TYPE SEE SCHEDULE FOR TYPE
	LUMINAIRE AND POLE – SEE SCHEDULE FOR TYPE
	WALL MOUNTED LUMINAIRE – SEE SCHEDULE FOR TYPE
	FLOOD LIGHTS – AIM IN THE DIRECTION SHOWN SEE SCHEDULE FOR TYPE
X	EXIT LIGHTS – SOLID SECTION IS DIRECTION OF FACE SEE SCHEDULE FOR TYPE
X	EMERGENCY LIGHT WITH BATTERY PACK SEE SCHEDULE FOR TYPE
	LIGHTING FIXTURE POWER AND SWITCHING LEGEND
Y Z (TYP)	X=FIXTURE TYPE Y=PANEL-CIRCUIT BRKR Z=SWITCH IF NO Z INDICATED, CONNECT DIRECTLY TO CIRCUIT BREAKER.
[B2]	CONDUIT/CONDUCTOR – REFER TO CIRCUIT SCHEDULE
LPA-2	HOME RUN – PANEL AND CIRCUIT NUMBER SHOWN
	EXPOSED CONDUIT AND CONDUCTORS*
	UNDERGROUND CONDUIT AND CONDUCTORS* NOTE: * ALL UNMARKED CONDUIT RUNS CONSIST OF 2#12, 1#12G IN 3/4"C.
YCX	YARD CONDUIT. REFER TO YARD CONDUIT SCHEDULE
DB	DIRECT BURIED CONDUIT
	CONDUIT, STUBBED AND CAPPED AS SHOWN
G	GROUND WIRE, 4/O UNLESS OTHERWISE NOTED
	GROUND ROD – 5/8" x 20' COPPER CLAD UNLESS OTHERWISE NOTED
S	WALL SWITCH: 2– DOUBLE POLE, 3– THREE WAY, 4– FOUR WAY, WP– WEATHERPROOF, P– PILOT LIGHT, K– KEY OPERATED, D– DIMMER, CRE– CORROSION RESISTANT
	CONVENIENCE RECEPTACLE – 20A DUPLEX UNLESS SPECIFIED OTHERWISE WP– WEATHERPROOF, TL– TWIST LOCK, C– CLOCK HANGER, CRE– CORROSION RESISTANT, GFI–GROUND FAULT INTERRUPTER
	CONVENIENCE RECEPTACLE – 20A QUADROPLEX UNLESS SPECIFIED OTHERWISE
	CONVENIENCE RECEPTACLE – 20A DUPLEX UNLESS SPECIFIED OTHERWISE. LOCATED ABOVE COUNTER TOP GFI–GROUND FAULT INTERRUPTER
	CONVENIENCE RECEPTACLE – 20A DUPLEX UNLESS SPECIFIED OTHERWISE. MOUNTED FLUSH IN FLOOR.
30	RECEPTACLE, SPECIAL PURPOSE – AMPERAGE AS INDICATED.
	TELEPHONE/DATA RECEPTACLE (OUTLET BOX, 18" AFF) W – WALL MOUNTED, 54" AFF
	TELEPHONE/DATA RECEPTACLE MOUNTED FLUSH IN FLOOR
J	JUNCTION BOX NEMA 12 ENCLOSURE UNLESS INDICATED OTHERWISE. 4X = NEMA 4X SS
SD	ANALOG ADDRESSABLE PHOTOELECTRIC TYPE SMOKE DETECTOR CEILING MOUNTED IN ACCORDANCE WITH NFPA 72. MOUNT AT LEAST 3' FROM ALL AIR REGISTERS.
HD	ANALOG ADDRESSABLE HEAT DETECTOR CEILING MOUNTED IN ACCORDANCE WITH NFPA 72. MOUNT AT LEAST 3' FROM ALL AIR REGISTERS.
MX A	ADDRESSABLE INPUT MODULE. MOUNT WITHIN 3' OF NON-ADDRESSABLE DEVICE. A = CLASS A
CX	ADDRESSABLE RELAY MODULE. MOUNT WITHIN 3' OF NON-ADDRESSABLE DEVICE.
FACP	FIRE ALARM CONTROL PANEL ANALOG/ADDRESSABLE PANEL WITH 80 CHARACTER BACKLIT DISPLAY, AUTOMATIC DRIFT COMPENSATION, CLASS A SLC CIRCUITS, CLASS A NOTIFICATION CIRCUITS.
NAC	NOTIFICATION APLIANCE POWER MODULE FOR CLASS A NOTIFICATION CIRCUITS.
EOLR	END-OF-LINE POWER SUPERVISION RELAY. INSTALL PER MANUFACTURER'S RECOMMENDATIONS
TVSS	SURGE SUPPRESSOR LOW VOLTAGE (120V) LINE PROTECTION 2 WIRE MODEL. INSTALL PER MANUFACTURER'S RECOMMENDATIONS

SYMBOL	DESCRIPTION
SD D RTS	ADDRESSABLE DUCT DETECTOR HOUSING WITH RELAY MODULE, SAMPLING TUBE, PHOTOELECTRIC SMOKE DETECTOR AND REMOTE TEST SWITCH. MOUNT IN ACCORDANCE WITH NFPA 72 AND 90A. INSTALLL ON ALL HAVC UNITS OVER 2000 CFM PER NFPA 90A. MOUNT RTU 48" AFF PER ADA REQUIRMENTS.
WP F XX	WALL MOUNTED HORN/STROBE WITH SELECTABLE CANDELA AND SYNC MODULE. WALL MOUNTED 80" AFF PER ADA REQUIREMENTS. XX = CANDELA RATING WP = WEATHERPROOF
BD R BD T RTU	PROJECTED BEAM SMOKE DETECTOR WITH REMOTE TEST STATION. WALL MOUNTED 12–18" BELOW ROOF JOISTS PER MANUFACTURER'S REQUIREMENTS. MOUNT RTU 48" AFF PER ADA REQUIREMENTS. T = TRANSMITTER R = RECEIVER
WP F XX	WALL MOUNTED HORN/STROBE WITH SELECTABLE CANDELA AND SYNC MODULE. WALL MOUNTED 80" AFF PER ADA REQUIREMENTS. XX = CANDELA RATING WP = WEATHERPROOF
F WP	ADDRESSABLE PULL STATION. WALL MOUNTED 48" AFF PER ADA REQUIREMENTS. WP = WEATHERPROOF
SS	SURGE SUPPRESSOR LOW VOLTAGE (24V) LINE PROTECTION 4 WIRE MODEL. INSTALL PER MANUFACTURER'S RECOMMENDATIONS
I	LINE ISOLATOR MODULE, CLASS A.
SM	SYNCHRONIZATION MODULE CLASS A.

MULTI-OUTLET SURFACE RACEWAY

TV — CABLE TV BOX AND OUTLET

ABBREVIATIONS

ABBREVIATIONS	DESCRIPTION
A	AMMETER, AMPERE
AC	ALTERNATING CURRENT
AF	AMPERE FRAME
AFF	ABOVE FINISHED FLOOR
AFG	ABOVE FINISHED GRADE
AS	AMMETER SWITCH, AMPERE SENSOR
ASU	AIR SUPPLY UNIT
ATS	AUTOMATIC TRANSFER SWITCH
BC	BYPASS CONTACTOR
BRKR	BREAKER
C	CONDUIT, CONTACTOR
CB	CIRCUIT BREAKER
CKT	CIRCUIT
CMS	COMBINATION MOTOR STARTER
CPT	CONTROL POWER TRANSFORMER
CR	CONTROL RELAY
CT	CURRENT TRANSFORMER
DC	DIRECT CURRENT
DIV	DIVISION
EF	EXHAUST FAN
EG	ELECTRICAL GROUND
ETM	ELAPSED TIME METER
EXST	EXISTING
FDR	FEEDER
F, FU	FUSE
FI	FLOW INDICATOR
FLR	FLOOR
FLUOR	FLUORESCENT
FM	FLOW METER
FS	FLOAT SWITCH, FLOW SWITCH
FT	FLOW TRANSMITTER
FUT	FUTURE
FVNR	FULL VOLTAGE NON-REVERSING STARTER
G	GREEN, GROUND
GALV	GALVANIZED
GEN	GENERATOR
GFI	GROUND FAULT INTERRUPTER
GFR	GROUND FAULT RELAY
GND	GROUND
HH	HANDHOLE
HID	HIGH INTENSITY DISCHARGE
HOA	HAND/OFF/AUTO
HOR	HAND/OFF/REMOTE
HPS	HIGH PRESSURE SODIUM
HVAC	HEATING, VENTILATING & AIR CONDITIONING
IC	INTERRUPTING CAPACITY
I & C	INSTRUMENTATION AND CONTROL
INST	INSTANTANEOUS
IP	INSTRUMENT PANEL (PANELBOARD)
J, J-BOX	JUNCTION BOX
K	KEY INTERLOCK
KK	KIRK KEY INTERLOCK
LA	LIGHTNING ARRESTER
LC	LIGHTING CONTACTOR
LP	LIGHTING PANEL (PANELBOARD)
LR	LOCAL/REMOTE, LATCHING RELAY
LS	LIMIT SWITCH
LT FLEX	LIQUID TIGHT FLEX CONDUIT
LTG	LIGHTING
M	MAGNETIC CONTACTOR COIL OR MOTOR
MA	MILLIAMPS
MCB	MAIN CIRCUIT BREAKER
MCC	MOTOR CONTROL CENTER
MDP	MAIN DISTRIBUTION PANEL
MH	MOTOR HEATER, MANHOLE
MLO	MAIN LUGS ONLY
MPZ	MINI POWER ZONE
MS	MOTOR STARTER
MSC	MANUFACTURER SUPPLIED CABLE
MT	MOUNT
MTD	MOTOR TEMPERATURE DETECTOR
N	NEUTRAL
NC	NORMALLY CLOSED
NEMA	NATIONAL ELECTRIC MANUFACTURER'S ASSOCIATION
NO	NORMALLY OPEN
NP	NAMEPLATE
NTS	NOT TO SCALE
OL	OVERLOAD RELAY
P	POLE
PB	PULL BOX
PC	PHOTOCELL
PH	PHASE
PM	PHASE MONITOR,POWER METER
PNL	PANEL
PP	POWER PANEL (480VAC)
PR	PAIR
PS	PRESSURE SWITCH
PT	POTENTIAL TRANSFORMER
PVC	POLYVINYL CHLORIDE CONDUIT
RCPT	RECEPTACLE
RMS	ROOT MEAN SQUARE
RS	RIGID STEEL CONDUIT
RGS	RIGID GALVANIZED STEEL CONDUIT
RTU	REMOTE TELEMETRY UNIT
SC	SURGE CAPACITOR
SF	SUPPLY FAN
SH	SPACE HEATER
S/N	SOLID NEUTRAL
SPD	SPEED
SSRVS	SOLID STATE REDUCED VOLTAGE STARTER
SST	STAINLESS STEEL
SV	SOLENOID VALVE
SW	SWITCH
SWBD	SWITCHBOARD
SWGR	SWITCHGEAR
SYM	SYMMETRICAL
T	THERMOSTAT
TB	TERMINAL BOARD
TDR	TIME DELAY RELAY
TJB	TERMINAL JUNCTION BOX
TS	THERMAL SWITCH
TSP	TWISTED SHIELDED PAIR
TVSS	TRANSIENT VOLTAGE SURGE SUPPRESSION
TYP	TYPICAL
UVR	UNDER VOLTAGE RELAY
V	VOLTMETER, VOLT
VFD	VARIABLE FREQUENCY DRIVE
VS	VOLTMETER SWITCH
W	WATT
WHD	WATTHOUR DEMAND METER
WP	WEATHERPROOF
XFMR	TRANSFORMER

ONE LINE DIAGRAMS, RISER DIAGRAMS AND SCHEMATICS

SYMBOL	DESCRIPTION
5	MOTOR, SQUIRREL CAGE INDUCTION UNLESS OTHERWISE NOTED – HORSEPOWER INDICATED
	OVERLOAD RELAY HEATER
1	MAGNETIC STARTER WITH NEMA SIZE INDICATED
M	MOTOR CIRCUIT PROTECTOR, MAGNETIC, 3 POLE UNLESS INDICATED OTHERWISE.
400	CIRCUIT BREAKER, THERMAL MAGNETIC TRIP SHOWN, 3 POLE UNLESS INDICATED OTHERWISE.
400 225	FUSED SWITCH, SWITCH AND FUSE CURRENT RATING INDICATED, 3 POLE UNLESS INDICATED OTHERWISE.
100	SWITCH – CURRENT RATING INDICATED, 3 POLE UNLESS INDICATED OTHERWISE.
400 600	DRAWOUT CIRCUIT BREAKER, LOW VOLTAGE 600= FRAME RATING, 400=TRIP SETTING
400 600	DRAWOUT CIRCUIT BREAKER, MEDIUM VOLTAGE 600= FRAME RATING, 400=TRIP SETTING
600 400	DRAWOUT FUSED SWITCH, LOW OR MEDIUM VOLTAGE 600= FRAME RATING, 400=FUSE RATING
(3)	CURRENT TRANSFORMER, NUMBER OF WINDINGS INDICATED
480–120 /208V 15 KVA, 3ø K-4 RATED	TRANSFORMER, VOLTAGES, PHASE AND RATING INDICATED AS APPLICABLE
	LIGHTNING ARRESTER
	CAPACITOR OR SURGE CAPACITOR
M	UTILITY METER
G	GENERATOR
X 0–600V	METER SCALE RANGE SHOWN IF REQUIRED A – AMPS PM – PHASE MONITOR V – VOLTS P – POWER METER
	FUSE
TVSS	TRANSIENT VOLTAGE SURGE SUPPRESSION
	GROUND
CPT 120V	CONTROL TRANSFORMER
GFR	GROUND FAULT RELAY WITH C.T.
	PUSH-BUTTON SWITCH, MOMENTARY CONTACT, NORMALLY OPEN
	PUSH-BUTTON SWITCH, MOMENTARY CONTACT, NORMALLY CLOSED
	PUSH BUTTON SWITCH, MAINTAINED CONTACTS WITH MECHANICAL INTERLOCK
	REMOTE DEVICE
A	INDICATING LIGHT – LETTER INDICATES COLOR A – AMBER G – GREEN B – BLUE R – RED C – CLEAR W – WHITE
A	PUSH TO TEST AND CONNECT INDICATING LIGHT SCHEMATIC DIAGRAMS ONLY A – AMBER G – GREEN B – BLUE R – RED C – CLEAR W – WHITE

SYMBOL	DESCRIPTION
S M	MANUAL MOTOR STARTER SWITCH, NEMA 4X UNLESS OTHERWISE NOTED. NUMBER OF POLES AS REQUIRED
PB 4X	PUSH-BUTTON STATION, NEMA 12 ENCLOSURE UNLESS INDICATED OTHERWISE. 4X = NEMA 4X STAINLESS STEEL ENCLOSURE. SEE CONTROL DIAGRAMS FOR TYPE PUSH BUTTON REQUIRED
30 4X	NONFUSED DISCONNECT SWITCH, SIZE INDICATED, 3 POLE UNLESS INDICATED OTHERWISE, NEMA 12 ENCLOSURE, 4X = NEMA 4X STAINLESS STEEL
F 40 60 4X	FUSED DISCONNECT SWITCH, SIZE INDICATED (60 = SWITCH RATING: 40 = FUSE RATING) 3 POLE UNLESS INDICATED OTHERWISE, NEMA 12 ENCLOSURE, 4X = NEMA 4X STAINLESS STEEL
LC 30 4X	LIGHTING CONTACTOR, CURRENT RATING INDICATED, NEMA 12 ENCLOSURE UNLESS INDICATED OTHERWISE. SEE CONTROL DIAGRAM FOR NUMBER OF POLES. 4X = NEMA 4X STAINLESS STEEL
2 4X	MAGNETIC STARTER, NEMA SIZE INDICATED, NEMA 12 ENCLOSURE, UNLESS INDICATED OTHERWISE. SEE CONTROL DIAGRAM. 4X = NEMA 4X STAINLESS STEEL
2 4X	COMBINATION (FUSE OR CIRCUIT BREAKER AS INDICATED). MAGNETIC STARTER, NEMA SIZE INDICATED, NEMA 12 ENCLOSURE UNLESS INDICATED OTHERWISE. SEE CONTROL SCHEMATIC DIAGRAM. 4X = NEMA 4X STAINLESS STEEL
	ELECTRIC RESISTANCE HEATER
ETM	ELAPSED TIME METER
CRX	CONTACT – NORMALLY OPEN WITH COIL INDICATED
CRX	CONTACT – NORMALLY CLOSED WITH COIL INDICATED
CRX	CONTROL RELAY, X=SEQUENTIAL NUMBER
LRX (L)	LATCHING RELAY, X=SEQUENTIAL NUMBER L – LATCH, U – UNLATCH
TDX NOTC	TIME DELAY RELAY, X=SEQUENTIAL NUMBER NOTC=NORMALLY OPEN TIMED CLOSED NOTO=NORMALLY OPEN TIMED OPEN AFTER CLOSE NCTO=NORMALLY CLOSED TIMED OPEN NCTC=NORMALLY CLOSED TIMED CLOSED AFTER OPEN
	TEMPERATURE
	OPENS ON RISING TEMPERATURE, CLOSES ON FALLING TEMPERATURE
	CLOSES ON RISING TEMPERATURE, OPENS ON FALLING TEMPERATURE
H O A XOO OOX	SELECTOR SWITCH: MAINTAINED CONTACT WITH CONTACT POSITION INDICATED, CHART IDENTIFIES OPERATION

	POSITION		
CKT.	HAND	OFF	AUTO
1	X	O	O
2	O	O	X

X – CLOSED CONTACT
O – OPEN CONTACT

GENERAL

SYMBOL	DESCRIPTION
	CONNECTION POINT TO EQUIPMENT SPECIFIED, FURNISHED AND INSTALLED UNDER OTHER SECTIONS. RACEWAY, CONDUCTOR AND CONNECTION IN THIS SECTION.
1"C,2#12,1#12G 1"C,1-25/C TYPE 1	INDICATES RACEWAY AND CIRCUIT CONDUCTORS. FIRST NUMBER IS RACEWAY SIZE. THE FOLLOWING NUMBERS ARE THE CONDUCTOR QUANTITIES, SIZES, AND TYPES.
	DEMOLITION TO BE REMOVED OR DELETED

LINE WEIGHT

NEW
EXISTING
FUTURE

NOTE:
THIS IS A STANDARD LEGEND SHEET. SOME SYMBOLS OR ABBREVIATIONS MAY APPEAR ON THIS SHEET AND NOT BE UTILIZED ON PROJECT.

RECORD DRAWINGS

REVISIONS DRAWN BY: E. SMITH DATE: DEC. 2007

THESE RECORD DRAWINGS HAVE BEEN PREPARED, IN PART, ON THE BASIS OF INFORMATION COMPILED BY OTHERS, AND MAY NOT REPRESENT THE EXACT LOCAION, TYPE OF COMPONENT, NOR MANNER OF CONSTRUCTION. THE ENGINEER, OR THE ENGINEER'S REPRESENTATIVE, HAS MADE PERIODIC VISITS TO THE SITE TO OBSERVE THE PROGRESS OF THE EXECUTED WORK, AND HEREBY CERTIFIES, BASED UPON THE KNOWLEDGE DERIVED THERE-FROM AND IN ACCORDANCE WITH THE DEPARTMENT OF PROFESSIONAL REGULATION RULE 21-1-1B.011.(4) THAT THESE RECORD DRAWINGS ACCURATELY REFLECT THE WORK PERFORMED.

NO.	DATE	ISSUED FOR	BY
2	01/08	RECORD DRAWINGS	ES
1	05/04	BID SET	ML

DESIGNED M.E.L.
DRAWN M.E.L.
CHECKED P.F.H.
PROJ. ENGR. P.A.D.

HILLERS ELECTRICAL ENGINEERING, INC.
23257 STATE ROAD 7, SUITE 100
BOCA RATON, FLORIDA 33428
(561) 451-9165
(561) 451-4866 FAX
LICENSE NO: EB 0006877
MARK E. LUTHER P.E.
No. 48801

HAZEN AND SAWYER
Environmental Engineers & Scientists
4000 Hollywood Boulevard, Suite 750N
Hollywood, Florida 33021
Certificate of Authorization Number: 2771

SCALE: NONE

CONTRACT: 40406
CLIENTS PROJECT:
ENGINEERS PROJECT: 40406
CAD REFERENCE: 40406E01.DWG

CITY OF HALLANDALE BEACH
UTILITIES DEPARTMENT

6 MGD MEMBRANE SOFTENING W.T.P.

ELECTRICAL LEGEND AND SYMBOLS

DATE: JANUARY 2008
SHEET: 111 OF 162
DRAWING: E-1

9/29/2001/3:46 P.M. - 42 HLWD - H:\40406\FIG\TEDMEMCH\40406FIG4-2.dwg - XREFS: - PS 1=1

GENERAL NOTES AND SPECIFICATIONS:

1. THE SCOPE OF WORK SHALL BE AS DESCRIBED IN SPECIFICATION SECTION 16010.
2. THE CONTRACTOR SHALL PROVIDE ALL MATERIALS AND LABOR TO INSTALL THE ELECTRICAL SYSTEMS AS INDICATED ON THE DRAWINGS. ITEMS NOT SHOWN BUT OBVIOUSLY NECESSARY FOR COMPLETION OF THE WORK SHALL BE INCLUDED.
3. THE INSTALLATION SHALL BE IN ACCORDANCE WITH THE NATIONAL ELECTRICAL CODE, NATIONAL ELECTRICAL SAFETY CODE, LOCAL CODES, CITY CODES AND FLORIDA BUILDING CODE.
4. THE CONTRACTOR SHALL OBTAIN ALL NECESSARY PERMITS, INSPECTIONS AND APPROVALS AND TO INCLUDE ALL FEES AS PART OF HIS BID IF NOT OTHERWISE NOTED.
5. THE CONTRACTOR SHALL COORDINATE HIS WORK WITH THE ENGINEER AND OWNER.
6. THE CONTRACTOR SHALL, BEFORE SUBMITTING HIS BID, VISIT THE SITE OF THE PROJECT AND BECOME FAMILIAR WITH THE EXISTING CONDITIONS. NO ALLOWANCE WILL BE MADE FOR EXISTING CONDITIONS OR FAILURE OF THE CONTRACTOR TO OBSERVE THEM.
7. IT IS THE CONTRACTOR'S RESPONSIBILITY TO COORDINATE WITH ALL LOCAL UTILITIES, INCLUDING THE POWER AND TELEPHONE UTILITIES TO MEET ALL OF THEIR INSTALLATION REQUIREMENTS. ALL FEES, LABOR, EQUIPMENT OR MATERIALS NECESSARY TO MEET THESE REQUIREMENTS IS TO BE INCLUDED IN THE BID. THE CONTRACTOR SHALL OBTAIN, DELIVER AND INSTALL ALL CONDUITS, PULL-BOXES AND EQUIPMENT AS REQUIRED BY THE UTILITIES TO THEIR SPECIFICATIONS.
   POWER UTILITY REPRESENTATIVE: PHILLIP GONZALEZ (954) 442-6335
   TELEPHONE UTILITY REPRESENTATIVE: EVAN BEWARY (954) 423-6296
8. ALL EQUIPMENT AND MATERIAL SHALL BE UNUSED AND U.L. LISTED. ALL REFERENCES TO A PARTICULAR MANUFACTURER ARE GIVEN ON AN "APPROVED EQUAL" BASIS.
9. THE CONTRACTOR IS RESPONSIBLE TO TEST ALL SYSTEMS INSTALLED OR MODIFIED UNDER THIS PROJECT AND REPAIR OR REPLACE ALL DEFECTIVE WORK TO THE SATISFACTION OF THE ENGINEER AND OWNER.
10. ALL EQUIPMENT FURNISHED AND INSTALLED BY THE CONTRACTOR SHALL BE GUARANTEED AGAINST DEFECTS IN MATERIAL AND WORKMANSHIP FOR A PERIOD OF ONE YEAR FROM DATE OF ACCEPTANCE.
11. ALL CONDUCTORS SHALL BE COPPER. NO ALUMINUM ALLOWED UNLESS SPECIFICALLY INDICATED ON DRAWINGS.
12. SHOP DRAWINGS SHALL BE SUBMITTED FOR ALL ELECTRICAL & CONTROL EQUIPMENT AND MATERIAL.
13. ALL CONTROL PANELS SHALL BE CONSTRUCTED BY A UL 508A APPROVED PANEL VENDOR AND SHALL BEAR A UL 508A LABEL ON THE PANEL.
14. THE DRAWINGS ARE NOT INTENDED TO SHOW THE EXACT LOCATION OF CONDUIT RUNS. THESE ARE TO BE COORDINATED WITH THE OTHER TRADES SO THAT CONFLICTS ARE AVOIDED PRIOR TO INSTALLATIONS.
15. ALL LOCATIONS OF EQUIPMENT, PANELS ETC. ARE SHOWN FOR ILLUSTRATION PURPOSES. CONTRACTOR SHALL VERIFY AND COORDINATE EXACT LOCATION AND SIZE WITH ALL SUBCONTRACTORS AND EQUIPMENT SUPPLIERS PRIOR TO ANY INSTALLATION AND THEN INSTALL AS SUCH WITH CORRESPONDING CONDUIT STUB-UPS.
16. SEE OTHER DISCIPLINE DRAWINGS FOR COORDINATION OF ALL DRAWINGS. ANY CONFLICTS SHALL BE BROUGHT TO THE ENGINEER'S ATTENTION AND MOVEMENT OF CONDUITS OR OTHER ELECTRICAL EQUIPMENT SHALL BE ACCOMPLISHED WITHOUT ANY ADDITIONAL COST FOR THE OWNER.
17. LOCATIONS OF MANHOLES, HANDHOLES AND PULL BOXES ARE APPROXIMATE. CONTRACTOR SHALL COORDINATE EXACT LOCATION WITH EXISTING AND NEW PIPING OR CONDUIT AND ADJUST ACCORDINGLY.
18. NOT ALL CONDUITS SHOWN ON RISER AND ONE-LINE DIAGRAMS ARE SHOWN ON BUILDING LAYOUTS. CONTRACTOR SHALL SUPPLY ALL CONDUITS AND CABLES AS SHOWN ON RISER AND ONE-LINE DIAGRAMS.
19. ALL CIRCUITS SHALL BE IDENTIFIED IN JUNCTION BOXES, PULL BOXES, CONTROL PANELS, PANELBOARDS, LIGHTING POLES, CONTROLLERS AND SERVICE POINTS. IDENTIFICATION SHALL MATCH PANELBOARD SCHEDULES.
20. EXPOSED RUNS OF CONDUITS SHALL BE INSTALLED WITH RUNS PARALLEL OR PERPENDICULAR TO WALLS, STRUCTURAL MEMBERS OR INTERSECTIONS OF VERTICAL PLANES AND CEILINGS, WITH RIGHT ANGLE TURNS CONSISTING OF SYMMETRICAL BENDS OR PULL BOXES AS INDICATED ON THE DRAWINGS. BENDS AND OFFSETS SHALL BE AVOIDED WHERE POSSIBLE.
21. INSTRUMENTATION IS LOW VOLTAGE SIGNALS SUCH AS 4-20MA, TELEPHONE COMMUNICATION, FIRE ALARM COMMUNICATION. POWER CONDUIT SHALL ONLY CROSS INSTRUMENTATION CONDUIT PERPENDICULARLY AT RIGHT ANGLES WITH 6" SEPARATION.
22. CONDUCTOR PULLING TENSIONS SHALL NOT EXCEED MANUFACTURER'S RECOMMENDATION. CONTRACTOR SHALL INSTALL PULL BOXES TO MEET MANUFACTURER'S REQUIREMENTS.
23. MINIMUM DISTANCE ALLOWED BETWEEN POWER CONDUITS AND INSTRUMENTATION CONDUITS SHALL BE:

VOLTAGE	DISTANCE
4160V	3 FT
480V	2 FT
120V	1 FT

24. THE CONTRACTOR SHALL BE RESPONSIBLE FOR ALL CONDUIT AND WIRING INSTALLATION FOR ALL VENDOR PROVIDED EQUIPMENT (PACKAGE SYSTEMS). IF THE SHOP DRAWINGS DIFFER FROM THE DESIGNED FACILITIES, THE CONTRACTOR SHALL REDESIGN THE FACILITIES AND SUBMIT THE REVISED DESIGN FOR THE ENGINEER'S APPROVAL ALONG WITH THE SHOP DRAWINGS. THERE SHALL BE NO ADDITIONAL COST TO THE OWNER FOR THE REDESIGN NOR FOR ANY ADDITIONAL CONDUITS AND WIRING. DURING SUBMITTAL THE CONTRACTOR SHALL VERIFY ALL SUPPLIED BREAKER SIZES FOR ALL PACKAGED SYSTEMS SUCH AS HVAC, EXHAUST FANS, MIXERS, CHEMICAL PUMPS ETC. AND MODIFY ALL BREAKERS IN MCC'S AND PANELBOARDS ACCORDINGLY WITHOUT ANY ADDITIONAL COST TO THE OWNER.
25. ALL EXCAVATIONS FOR CONDUITS, HANDHOLES, MANHOLES AND PULLBOXES NEAR EXISTING PIPING, CONDUIT AND EQUIPMENT SHALL BE HAND EXCAVATED AND COORDINATED WITH PLANT ENGINEER.
26. MINIMUM DEPTH FROM TOP OF DUCTBANKS OR CONDUITS TO FINISHED GRADE SHALL BE 24" UNLESS OTHERWISE NOTED.
27. COLORED WARNING TAPE 6" WIDE SHALL BE INSTALLED 8" BELOW FINISHED GRADE DIRECTLY ABOVE ALL UNDERGROUND YARD CONDUITS ACCORDING TO THE FOLLOWING SCHEDULE:
   POWER: RED
   ALL OTHER CONDUITS: GREEN
28. CONTRACTOR SHALL RESTORE SIDEWALKS, ROADWAYS, SOD AND SPRINKLER SYSTEM PIPING TO MATCH EXISTING, AFTER THE COMPLETION OF THE CONDUIT AND PULLBOX INSTALLATION.
29. GROUNDING SHALL BE INSTALLED IN ACCORDANCE WITH NEC, ARTICLE 250. THE GROUNDING SYSTEM TEST SHALL NOT EXCEED A 48 HOUR SPAN DRY RESISTANCE OF 10 OHMS. ADDITIONAL GROUNDING TO MEET THIS REQUIREMENT SHALL BE INSTALLED AT NO EXTRA COST. GROUNDING AND BONDING CONNECTIONS SHALL NOT BE PAINTED. ALL GROUNDING CONNECTIONS SHALL BE EXOTHERMIC UNLESS SPECIFICALLY INDICATED OTHERWISE.
30. AN EQUIPMENT GROUND WIRE SIZED PER NEC SHALL BE PULLED IN ALL ELECTRICAL CONDUITS, POWER AND CONTROL, WHETHER OR NOT INDICATED ON THE PLANS.
31. ALL ENCLOSURES, TJB, WIREWAY, PULL BOXES ETC. SHALL CONTAIN A GROUNDING BUS. CONNECT ALL RACEWAY BONDS TO THIS BUS VIA GROUNDING BUSHING AND EXTEND BONDING JUMPER FROM THIS BUS TO THE ENCLOSURE.
32. PRIMARY BUILDING GROUNDING SHALL BE AN EMBEDDED GRID OF MINIMUM #4/0 AWG WIRE INSTALLED IN THE FOUNDATION AND AROUND THE BUILDING PERIMETER TO FORM A COMPLETE LOOP. SECONDARY GROUND CONNECTIONS TO ALL METAL EQUIPMENT, HAND RAILS, STRUCTURAL STEEL, CONCRETE PADS, REBAR ETC. SHALL HAVE A MINIMUM #4 STRANDED COPPER CONDUCTOR BONDED USING APPROVED LUGS OR EXOTHERMIC CONNECTIONS. ALL EQUIPMENT GROUNDING CONDUCTORS PENETRATING CONCRETE SLABS OR FINISHED GRADE SHALL HAVE A 72" CONDUCTOR PIGTAIL AT EACH LOCATION FOR CONNECTION TO EQUIPMENT.
33. GROUND SURROUNDING YARD FENCE AND ALL YARD LIGHTING FIXTURES WITH MINIMUM #4 STRANDED COPPER CONDUCTORS BELOW GRADE TO SITE GROUNDING GRID PER NFPA 54/70.
34. ALL CONCRETE ENCASED DUCTBANKS SHALL CARRY A MINIMUM #4/0 AWG BARE COPPER GROUND WIRE, OVER THE ENTIRE LENGTH, WHICH SHALL BE CONNECTED TO THE SITE GROUNDING GRID AND GROUND RODS LOCATED CONNECTING MANHOLES, HANDHOLES OR PULL BOXES.
35. CONTRACTOR SHALL CORE DRILL EXISTING CONCRETE WALLS, FLOORS, MANHOLES, HANDHOLES AND PULL BOXES FOR CONDUIT PENETRATIONS. SEAL PENETRTATIONS WITH NON-SHRINK GROUT OR APPROPRIATE FIRE RATED DEVICES WHERE APPLICABLE.
36. ALL CONDUITS PENETRATING RATED FIRE WALLS OR RATED FIRE FLOORS SHALL BE INSTALLED WITH U.L. APPROVED DEVICES TO MAINTAIN THE FIRE RATING OF THE WALL OR FLOOR PENETRATED.
37. PROVIDE CONDUIT DUCT SEAL AT ALL CONDUIT ENDS.
38. ALL SPARE CONDUITS SHALL BE SEALED WITH A CAP AT BOTH ENDS AND A PULL STRING INSTALLED WITH IDENTIFICATION ON BOTH ENDS.
39. ALL RECEPTACLES SHALL BE INSTALLED 18" AFF UNLESS OTHERWISE NOTED. LIGHT SWITCHES SHALL BE MOUNTED 48" AFF UNLESS OTHERWISE NOTED.
40. ALL RECEPTACLES WITHIN 6' OF A SINK SHALL BE GFI.
41. FLEXIBLE CONDUITS SHALL BE USED TO TERMINATE ALL MOTORS AND OTHER VIBRATING EQUIPMENT AND SHALL BE BETWEEN 18" AND 3' IN LENGTH.
42. ELECTRICAL PULL BOXES SHALL BE SUPPLIED WITH PVC JUNCTION BOXES AND A STEEL TRAFFIC-RATED COVER MARKED "ELECTRICAL" OR "SIGNAL".
43. TYPEWRITTEN PANEL SCHEDULES SHALL BE INSTALLED IN EACH PANELBOARD, AND TYPEWRITTEN TERMINAL BLOCK SCHEDULES IN EACH CONTROL CABINET.
44. ALL TVSS SHALL BE INTEGRAL TO THE NEW EQUIPMENT SHOWN AND SUPPLIED AS ONE UNIT AND ONE U.L. ENTITY.
45. AS PART OF THE ELECTRICAL SUBMITTAL, CONTRACTOR SHALL PROVIDE A LAYOUT OF THE ELECTRICAL ROOM SHOWING SIZES OF ALL EQUIPMENT AND THIER SPATIAL RELATIONSHIPS.
46. BRANCH CIRCUITS EXCEEDING 100 FT IN LENGTH SHALL BE WIRED WITH MINIMUM #10 AWG WIRES.
47. ALL MATERIAL IN DESIGNATED CORROSIVE AREAS SHALL BE NEMA 4X STAINLESS STEEL OR NON-METALLIC.
48. ALL OUTDOOR LIGHTING FIXTURES SHALL BE OF COPPER FREE CONSTRUCTION.
49. CONTRACTOR SHALL BALANCE PANELBOARD LOADS AT THE END OF THE PROJECT.
50. ALL YARD CONDUITS (YC) SHALL BE CONCRETE ENCASED PER DETAILS DRAWING E-34.

RECORD DRAWINGS

REVISIONS DRAWN BY: E. SMITH DATE: DEC. 2007

THESE RECORD DRAWINGS HAVE BEEN PREPARED, IN PART, ON THE BASIS OF INFORMATION COMPILED BY OTHERS, AND MAY NOT REPRESENT THE EXACT LOCAION, TYPE OF COMPONENT, NOR MANNER OF CONSTRUCTION. THE ENGINEER, OR THE ENGINEER'S REPRESENTATIVE, HAS MADE PERIODIC VISITS TO THE SITE TO OBSERVE THE PROGRESS OF THE EXECUTED WORK AND HEREBY CERTIFIES, BASED UPON THE KNOWLEDGE DERIVED THERE-FROM AND IN ACCORDANCE WITH THE DEPARTMENT OF PROFESSIONAL REGULATION RULE 21-1-1B.011.(4) THAT THESE RECORD DRAWINGS ACCURATELY REFLECT THE WORK PERFORMED

NO.	DATE	ISSUED FOR	BY
2	01/08	RECORD DRAWINGS	ES
1	10/03	BID SET	ML

DESIGNED M.E.L.
DRAWN M.E.L.
CHECKED P.F.H.
PROJ. ENGR. P.A.D.

HILLERS ELECTRICAL ENGINEERING, INC.
23257 STATE ROAD 7, SUITE 100
BOCA RATON, FLORIDA 33428
(561) 451-9165
(561) 451-4886 FAX
LICENSE NO: EB 0006877
MARK E. LUTHER P.E.
No. 48801

HAZEN AND SAWYER
Environmental Engineers & Scientists
4000 Hollywood Boulevard, Suite 750N
Hollywood, Florida 33021
Certificate of Authorization Number: 2771

SCALE NONE

CONTRACT: 40406
CLIENTS PROJECT:
ENGINEERS PROJECT: 40406
CAD REFERENCE: 40406E02.DWG

CITY OF HALLANDALE BEACH
UTILITIES DEPARTMENT

6 MGD MEMBRANE SOFTENING W.T.P.

GENERAL NOTES AND SPECIFICATIONS

DATE: JANUARY 2008
SHEET: 112 OF 162
DRAWING: E-2

9/28/2001/3:46 P.M. - 42 HLWD - H:\40406\FIG\TECHMEMO\40406F104-2.dwg - XREFS: - PS 1=1

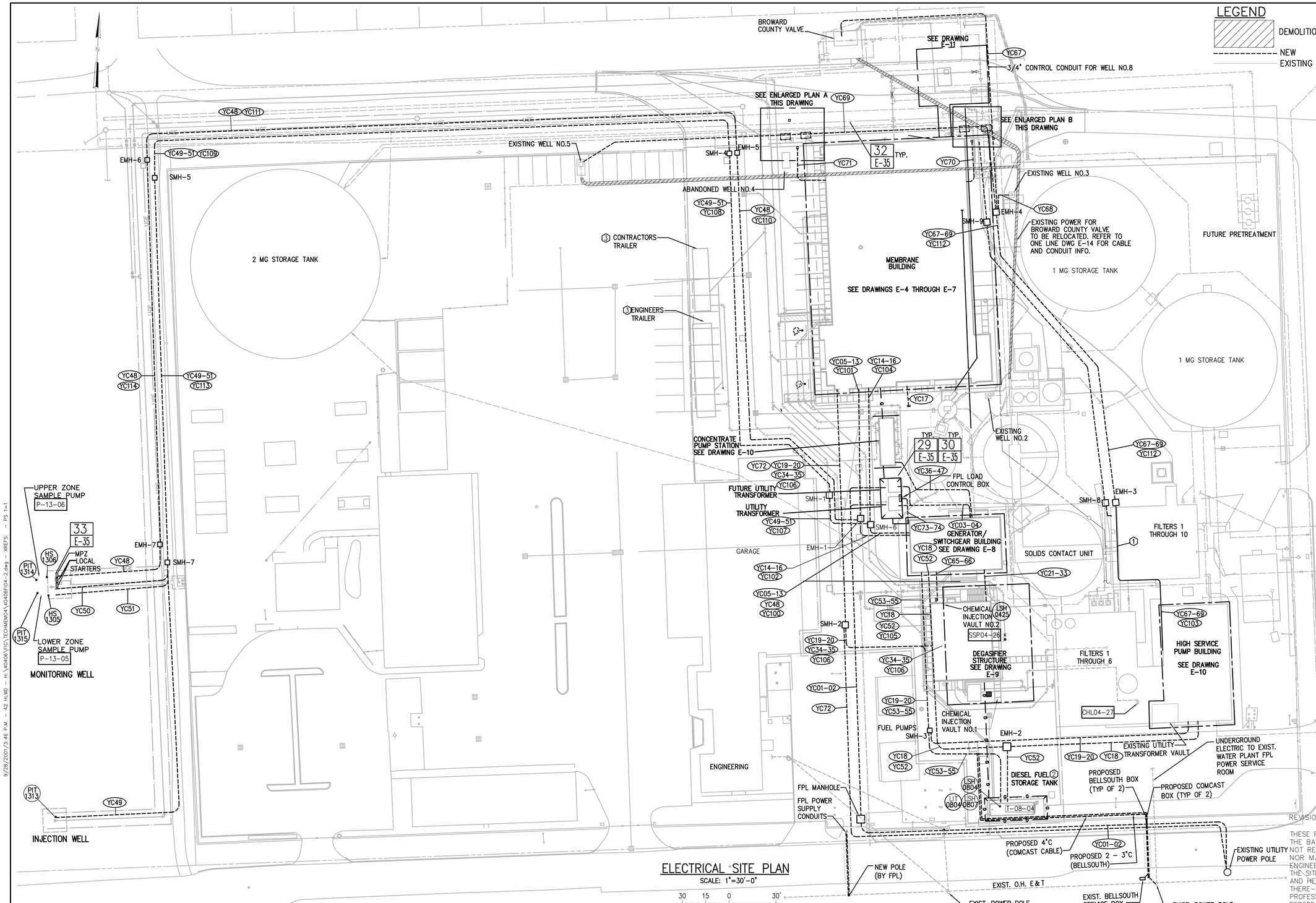

ELECTRICAL SITE PLAN

SCALE: 1"=30'-0"

LEGEND

- DEMOLITION
- NEW
- EXISTING

NOTES

1. DRAWINGS ARE DEVELOPED FROM OWNERS EXISTING DOCUMENTS AND MINIMAL SUB-SURFACE INVESTIGATION. CONDUIT AND WIRE KNOWN TO BE IN CONFLICT WITH CONSTRUCTION OF THE NEW FACILITIES ARE INDICATED FOR RELOCATION.
2. CONTRACTOR SHALL HAND EXCAVATE AREA BENEATH LOCATIONS OF PROPOSED MEMBRANE BUILDING, GENERATOR/SWITCHGEAR BUILDING, DEGASIFIER STRUCTURE, CONCENTRATE PUMP STATION AND TRANSFORMER PADS AND SHALL DOCUMENT ALL CONDUITS UNEARTHED. CONTRACTOR SHALL DETERMINE SOURCE AND DESTINATION OF EACH CONDUIT, AND THE NUMBER AND TYPE OF CONDUCTORS INSIDE, AND INDICATE WHICH CONDUITS MUST BE RELOCATED TO PERFORM THE WORK OF THIS CONTRACT. CONTRACTOR SHALL SUBMIT A DRAWING OF ALL UNEARTHED CONDUITS AND A PROPOSED RELOCATION ROUTING OUT OF THE AREA OF CONSTRUCTION TO THE ENGINEER FOR REVIEW AND APPROVAL PRIOR TO PERFORMING ANY CONSTRUCTION. HAND EXCAVATION SHALL BE PERFORMED TO A DEPTH OF 4'-0" BELOW GRADE.

KEYED NOTES

1. CONTRACTOR SHALL ROUTE CONDUIT ON OUTSIDE OF BUILDING FROM PULLBOX TO EXISTING MCC NO.2. SUPPORT CONDUIT PER NEC REQUIRMENTS AND MAKE ALL NCESSARY SUPPORTS, CONNECTIONS AND MODIFICATIONS FOR A COMPLETE WORKING SYSTEM IN PLACE.
2. CONTRACTOR SHALL GROUND NEW DIESEL FUEL STORAGE TANK AND REBAR IN PAD USING EXOTHERMIC WELD CONNECTIONS.
3. FOR TEMPORARY POWER DETAILS REFER TO DRAWING E-31.

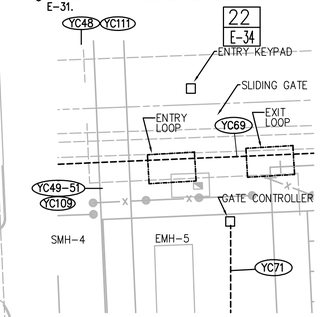

ENLARGED PLAN A

SCALE: 1"=10'-0"

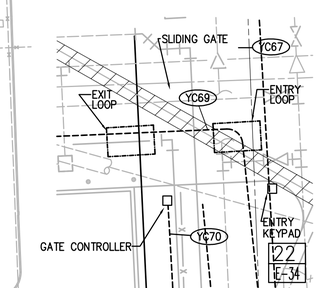

ENLARGED PLAN B

SCALE: 1"=10'-0"

RECORD DRAWINGS

REVISIONS DRAWN BY: E. SMITH DATE: DEC. 2007

THESE RECORD DRAWINGS HAVE BEEN PREPARED, IN PART, ON THE BASIS OF INFORMATION COMPILED BY OTHERS, AND MAY NOT REPRESENT THE EXACT LOCAION, TYPE OF COMPONENT, NOR MANNER OF CONSTRUCTION. THE ENGINEER, OR THE ENGINEER'S REPRESENTATIVE, HAS MADE PERIODIC VISITS TO THE SITE TO OBSERVE THE PROGRESS OF THE EXECUTED WORK. AND HEREBY CERTIFIES, BASED UPON THE KNOWLEDGE DERIVED THERE-FROM AND IN ACCORDANCE WITH THE DEPARTMENT OF PROFESSIONAL REGULATION RULE 21-1-18.011(4) THAT THESE RECORD DRAWINGS ACCURATELY REFLECT THE WORK PERFORMED.

NO.	DATE	ISSUED FOR	BY
4	01/08	RECORD DRAWINGS	ES
3	01/05	PERMIT REVISIONS	ML
2	07/04	ADDENDUM No. 2	ML
1	05/04	BID SET	ML

DESIGNED M.E.L.
DRAWN M.E.L.
CHECKED P.F.H.
PROJ. ENGR. P.A.D.

HILLERS ELECTRICAL ENGINEERING, INC.
23257 STATE ROAD 7, SUITE 100
BOCA RATON, FLORIDA 33428
(561) 451-9165
(561) 451-4886 FAX
LICENSE NO: EB 0006877
MARK E. LUTHER P.E.
No. 48801

HAZEN AND SAWYER
Environmental Engineers & Scientists
4000 Hollywood Boulevard, Suite 750N
Hollywood, Florida 33021
Certificate of Authorization Number: 2771

SCALE: AS SHOWN

CONTRACT: 40406
CLIENTS PROJECT:
ENGINEERS PROJECT: 40406
CAD REFERENCE: 40406E03.DWG

CITY OF HALLANDALE BEACH
UTILITIES DEPARTMENT

6 MGD MEMBRANE SOFTENING W.T.P.

ELECTRICAL SITE PLAN

DATE: JANUARY 2008
SHEET: 113 OF 162
DRAWING: E-3

9/28/2007 3:46 P.M. - 42 PLWD - H:\40406\FIG\TECHMEMO4\40406F04-2.dwg - XREFS: - PS 1=1

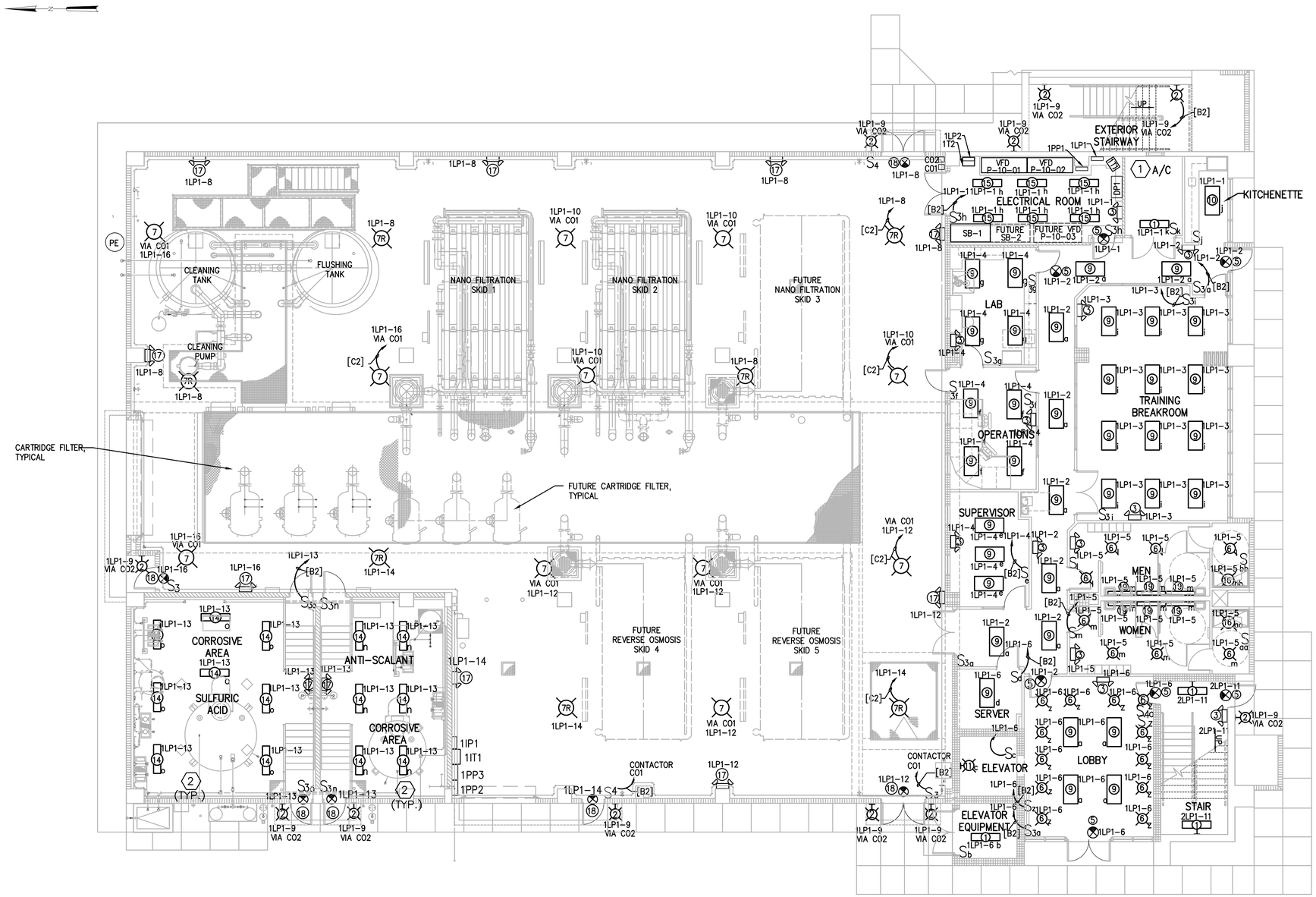

KEYED NOTES

1. CONTRACTOR SHALL COORDINATE LIGHTING FIXTURE LOCATIONS WITH HVAC AND PIPING AND SHALL ADJUST THE LIGHTING FIXTURE LOCATIONS AS NECESSARY TO AVOID INTERFERENCES. PROVIDE ALL NECESSARY MOUNTING HARDWARE AND MAKE ALL CONNECTIONS FOR A COMPLETE WORKING SYSTEM IN PLACE.
2. ALL CONDUIT ENTERING CHEMICAL CONTAINMENT AREA SHALL BE OVERHEAD CONDUIT WITH MINIMUM 60" ABOVE CONTAINMENT.

NOTES FOR DRAWINGS E-4 THROUGH E-11

1. COMBINING OF NEUTRAL CONDUCTORS SHALL NOT BE ALLOWED. ALL CONDUCTORS LEAVING A CIRCUIT BREAKER IN A PANELBOARD SHALL CARRY A SEPERATE NEUTRAL CONDUCTOR IDENTICAL IN SIZE.
2. ALL CONDUITS OUTSIDE THE BUILDING AND IN THE OFFICE AREAS SHALL BE RECESSED.
3. BEFORE INSTALLATION, COORDINATE LOCATION OF FIXTURES WITH ALL DISCIPLINES TO AVOID CONFLICTS AND MOVE FIXTURES IF NECESSARY AFTER APPROVAL FROM ENGINEER.
4. CONDUIT/CABLES NOT SHOWN ON FACILITY PLAN FOR CLARITY. PROVIDE COMPLETE WORKING LIGHTING, RECEPTACLE, ETC. SYSTEM. PROVIDE MINIMUM 3/4"C, 2#12, 1#12EG.
5. RECEPTACLES IN OFFICE AREAS SHALL BE 18" AFF UNLESS OTHERWISE NOTED.
6. RECEPTACLES IN PROCESS AND CHEMICAL AREAS SHALL BE 48" AFF AND SHALL BE WEATHER RESISTANT. RECEPTACLES IN CHEMICAL ROOMS SHALL BE NON-METAL AND CORROSIVE RESISTANT.
7. FOR LOCATIONS OF SF'S, EF'S, AHU'S AND CU'S, SEE HVAC DRAWINGS.
8. COORDINATE FINAL LIGHT FIXTURE LOCATION WITH HVAC EQUIPMENT AND DUCT. RELOCATE FIXTURES AS NECESSARY TO AVOID CONFLICTS.
9. ALL CONDUITS FOR FUTURE PUMPS POWER AND CONTROL SHALL BE INSTALLED.
10. CONDUITS SHALL NOT PENETRATE CONTAINMENT AREAS IN CHEMICAL ROOMS. ALL CONDUIT RUNS SHALL BE FROM ABOVE AND ALL EQUIPMENT ENTRY SHALL BE FROM THE TOP.

CIRCUIT SCHEDULE

[B2] = [3/4"C, 2#12, 1#12G]
[C2] = [3/4"C, 2#10, 1#10G]

PROCESS BUILDING FIRST FLOOR LIGHTING PLAN

SCALE: 1/8"=1'-0"

RECORD DRAWINGS

REVISIONS DRAWN BY: E. SMITH DATE: DEC. 2007

THESE RECORD DRAWINGS HAVE BEEN PREPARED, IN PART, ON THE BASIS OF INFORMATION COMPILED BY OTHERS, AND MAY NOT REPRESENT THE EXACT LOCAION, TYPE OF COMPONENT, NOR MANNER OF CONSTRUCTION. THE ENGINEER, OR THE ENGINEER'S REPRESENTATIVE, HAS MADE PERIODIC VISITS TO THE SITE TO OBSERVE THE PROGRESS OF THE EXECUTED WORK, AND HEREBY CERTIFIES, BASED UPON THE KNOWLEDGE DERIVED THERE-FROM AND IN ACCORDANCE WITH THE DEPARTMENT OF PROFESSIONAL REGULATION RULE 21-1-1B.011.(4) THAT THESE RECORD DRAWINGS ACCURATELY REFLECT THE WORK PERFORMED.

1/8"=1'-0" 8 6 4 2 0 8'

NO.	DATE	ISSUED FOR	BY
2	01/08	RECORD DRAWINGS	ES
1	10/03	BID SET	ML

DESIGNED M.E.L.
DRAWN M.E.L.
CHECKED P.F.H.
PROJ. ENGR. P.A.D.

HILLERS ELECTRICAL ENGINEERING, INC.
23257 STATE ROAD 7, SUITE 100
BOCA RATON, FLORIDA 33428
(561) 451-9165
(561) 451-4886 FAX
LICENSE NO: EB 0006877
MARK E. LUTHER P.E.
No. 48801

HAZEN AND SAWYER
Environmental Engineers & Scientists
4000 Hollywood Boulevard, Suite 750N
Hollywood, Florida 33021
Certificate of Authorization Number: 2771

SCALE: AS NOTED

CONTRACT: 40406
CLIENTS PROJECT:
ENGINEERS PROJECT: 40406
CAD REFERENCE: 40406E04

CITY OF HALLANDALE BEACH
UTILITIES DEPARTMENT

6 MGD MEMBRANE SOFTENING W.T.P.

PROCESS BUILDING
FIRST FLOOR LIGHTING PLAN

DATE: JANUARY 2008
SHEET: 114 OF 162
DRAWING: E-4

10/3/2001 2:39 P.M. - 42 HLWD - H:\40406\FIG\TECHNEMO8\40406FIG.8-1.dwg - XREFS: - PS T=1

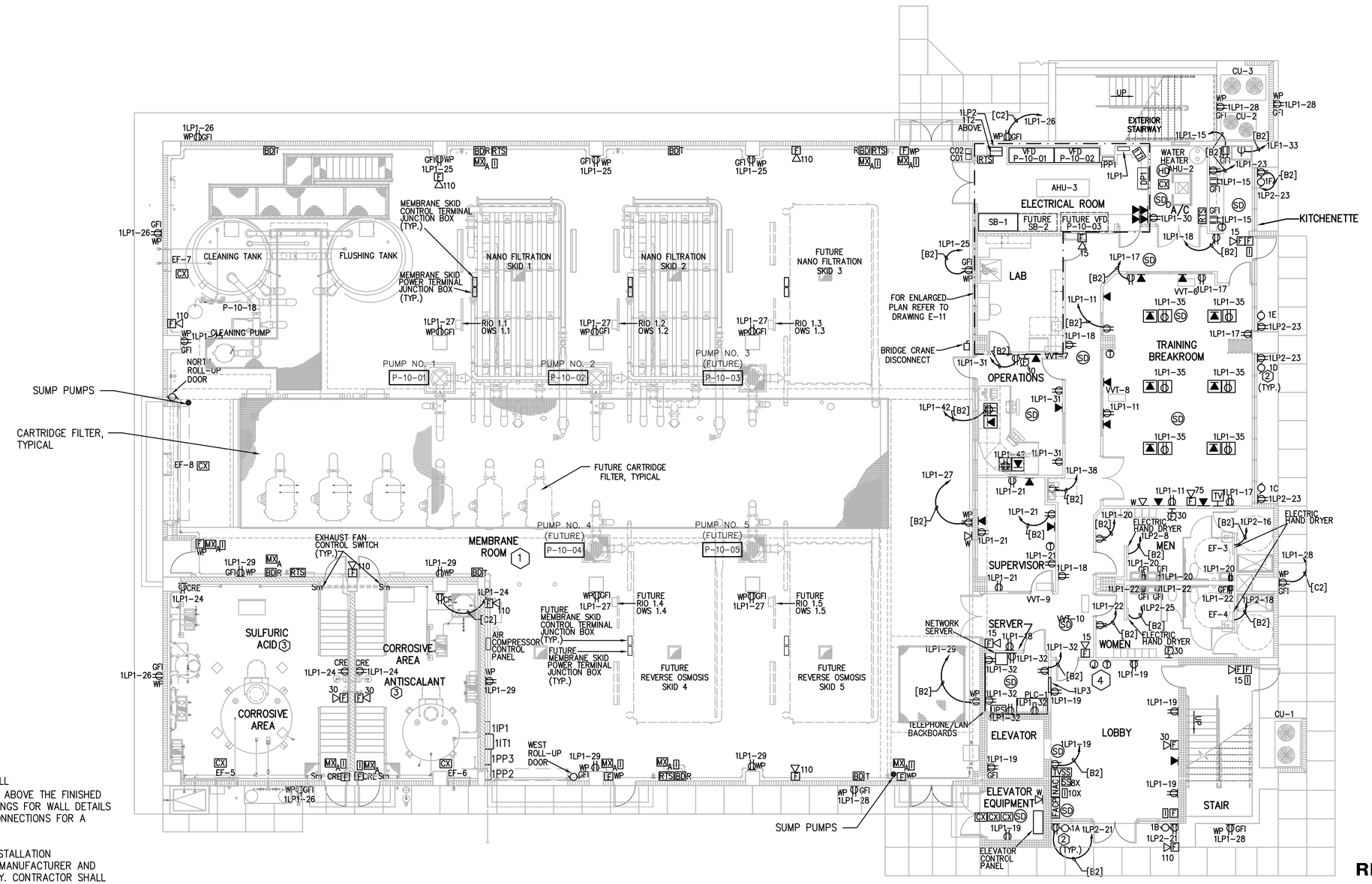

KEYED NOTES

1. CONTRACTOR SHALL PROVIDE AND INSTALL RECEPTACLE/TELEPHONE OUTLETS AT 4" ABOVE THE FINISHED FLOOR. REFER TO ARCHITECTURAL DRAWINGS FOR WALL DETAILS IN THIS AREA. MAKE ALL NECESSARY CONNECTIONS FOR A COMPLETE WORKING SYSTEM IN PLACE.
2. CONTRACTOR SHALL COORDINATE ALL INSTALLATION REQUIREMENTS WITH ROLL-UP SHUTTER MANUFACTURER AND ADJUST ELECTRICAL DESIGN ACCORDINGLY. CONTRACTOR SHALL COORDINATE WITH THE OWNER FOR LOCATION OF ALL ROLL-UP SHUTTER SWITCH LOCATIONS. SWITCHES SHALL BE INSTALLED TESTED AND WIRED PER MANUFACTURER REQUIREMENTS. CONTRACTOR SHALL MAKE ALL NECESSARY CONNECTIONS FOR A COMPLETE WORKING SYSTEM IN PLACE.
3. ALL CONDUIT ENTERING CHEMICAL CONTAINMENT AREA SHALL BE OVERHEAD CONDUIT WITH MINIMUM 60" ABOVE CONTAINMENT.
4. RECESSED JUNCTION BOX FOR FUTURE ACCESS CONTROL SYSTEM. PROVIDE AND INSTALL 3/4"C WITH PULL STRING TO SERVER ROOM. STUB AND CAP.

PROCESS BUILDING FIRST FLOOR POWER AND COMMUNICATIONS PLAN

SCALE: 1/8"=1'-0"

CIRCUIT SCHEDULE

[B2] = [3/4"C, 2#12, 1#12G]
[C2] = [3/4"C, 2#10, 1#10G]

RECORD DRAWINGS

REVISIONS DRAWN BY: E. SMITH DATE: DEC. 2007

THESE RECORD DRAWINGS HAVE BEEN PREPARED, IN PART, ON THE BASIS OF INFORMATION COMPILED BY OTHERS, AND MAY NOT REPRESENT THE EXACT LOCAION, TYPE OF COMPONENT, NOR MANNER OF CONSTRUCTION. THE ENGINEER, OR THE ENGINEER'S REPRESENTATIVE, HAS MADE PERIODIC VISITS TO THE SITE TO OBSERVE THE PROGRESS OF THE EXECUTED WORK, AND HEREBY CERTIFIES, BASED UPON THE KNOWLEDGE DERIVED THERE-FROM AND IN ACCORDANCE WITH THE DEPARTMENT OF PROFESSIONAL REGULATION RULE 21-1-1B.011.(4) THAT THESE RECORD DRAWINGS ACCURATELY REFLECT THE WORK PERFORMED.

1/8"=1'-0" 8 6 4 2 0 8'

NO.	DATE	ISSUED FOR	BY
3	01/08	RECORD DRAWINGS	ES
2	01/05	PERMITTING REVISIONS	ML
1	05/04	BID SET	ML

DESIGNED M.E.L.
DRAWN M.E.L.
CHECKED P.F.H.
PROJ. ENGR. P.A.D.

HILLERS ELECTRICAL ENGINEERING, INC.
23257 STATE ROAD 7, SUITE 100
BOCA RATON, FLORIDA 33428
(561) 451-9165
(561) 451-4886 FAX
LICENSE NO: EB 0006877
MARK E. LUTHER P.E.
No. 48801

HAZEN AND SAWYER
Environmental Engineers & Scientists
4000 Hollywood Boulevard, Suite 750N
Hollywood, Florida 33021
Certificate of Authorization Number: 2771

SCALE: NONE

CONTRACT: 40406
CLIENTS PROJECT:
ENGINEERS PROJECT: 40406
CAD REFERENCE: 40406E05

CITY OF HALLANDALE BEACH
UTILITIES DEPARTMENT

6 MGD MEMBRANE SOFTENING W.T.P.

PROCESS BUILDING FIRST FLOOR POWER AND COMMUNICATIONS PLAN

DATE: JANUARY 2008
SHEET: 115 OF 162
DRAWING: E-5

10/3/2001 2:39 P.M. - 42 HLWD - H:\40406\FIG\TEDHMED08\40406E05.8-1.dwg - XREFS: - PS 1=1

KEYED NOTES

1. EXHAUST FAN SHALL BE WIRED TO LIGHTING CIRCUIT IN RESTROOM AND CONTROLLED FROM LOCAL LIGHT SWITCH. FAN SHALL TURN ON/OFF WHEN LIGHTS TURN ON/OFF. FURNISH LIGHT SWITCH WITH ONE POLE FOR LIGHT (NO TIME DELAY) AND ANOTHER POLE FOR FAN WITH INTEGRAL ADJUSTABLE OFF DELAY TIMER.

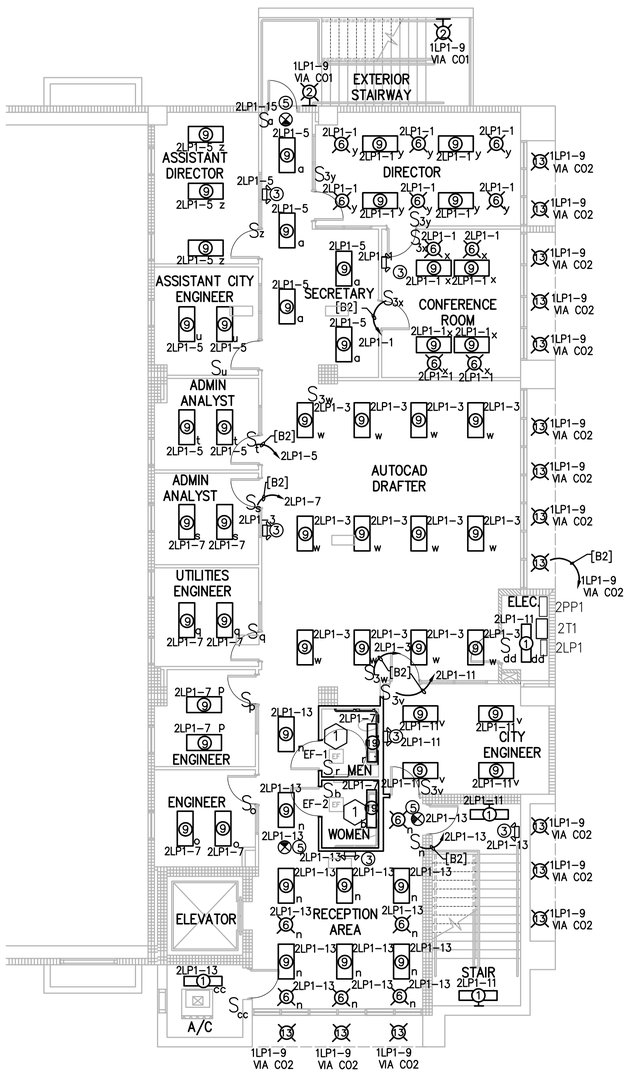

PROCESS BUILDING SECOND FLOOR LIGHTING PLAN

SCALE: 1/8"=1'-0"

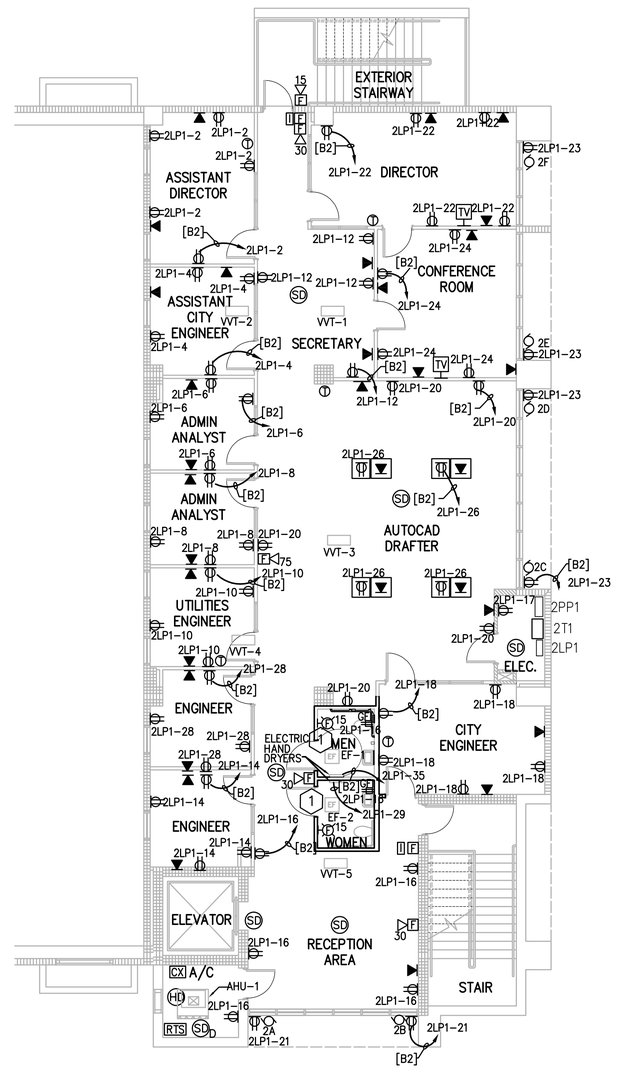

PROCESS BUILDING SECOND FLOOR POWER AND COMMUNICATIONS PLAN

SCALE: 1/8"=1'-0"

RECORD DRAWINGS

REVISIONS DRAWN BY: E. SMITH DATE: DEC. 2007

THESE RECORD DRAWINGS HAVE BEEN PREPARED, IN PART, ON THE BASIS OF INFORMATION COMPILED BY OTHERS, AND MAY NOT REPRESENT THE EXACT LOCAION, TYPE OF COMPONENT, NOR MANNER OF CONSTRUCTION. THE ENGINEER, OR THE ENGINEER'S REPRESENTATIVE, HAS MADE PERIODIC VISITS TO THE SITE TO OBSERVE THE PROGRESS OF THE EXECUTED WORK, AND HEREBY CERTIFIES, BASED UPON THE KNOWLEDGE DERIVED THERE-FROM AND IN ACCORDANCE WITH THE DEPARTMENT OF PROFESSIONAL REGULATION RULE 21-1-1B.011.(4) THAT THESE RECORD DRAWINGS ACCURATELY REFLECT THE WORK PERFORMED.

SCALE: 1/8"=1'-0" 8 6 4 2 0 8'

NO.	DATE	ISSUED FOR	BY
2	01/08	RECORD DRAWINGS	ES
1	05/04	BID SET	ML

DESIGNED M.E.L.
DRAWN M.E.L.
CHECKED P.F.H.
PROJ. ENGR. P.A.D.

HILLERS ELECTRICAL ENGINEERING, INC.
23257 STATE ROAD 7, SUITE 100
BOCA RATON, FLORIDA 33428
(561) 451-9165
(561) 451-4886 FAX
LICENSE NO: EB 0006877
MARK E. LUTHER P.E.
No. 48801

HAZEN AND SAWYER
Environmental Engineers & Scientists
4000 Hollywood Boulevard, Suite 750N
Hollywood, Florida 33021
Certificate of Authorization Number: 2771

SCALE: AS SHOWN

CONTRACT: 40406
CLIENTS PROJECT:
ENGINEERS PROJECT: 40406
CAD REFERENCE: 40406E06.DWG

CITY OF HALLANDALE BEACH
UTILITIES DEPARTMENT

6 MGD MEMBRANE SOFTENING W.T.P.

PROCESS BUILDING SECOND FLOOR LIGHTING, POWER AND COMMUNICATIONS PLAN

DATE: JANUARY 2008
SHEET: 116 OF 162
DRAWING: E-6

9/28/2001 3:46 P.M. - 42 HLWD - H:\40406\FIG\TECHMEMO4\40406FIG4-2.dwg - XREFS: - PS 1=1

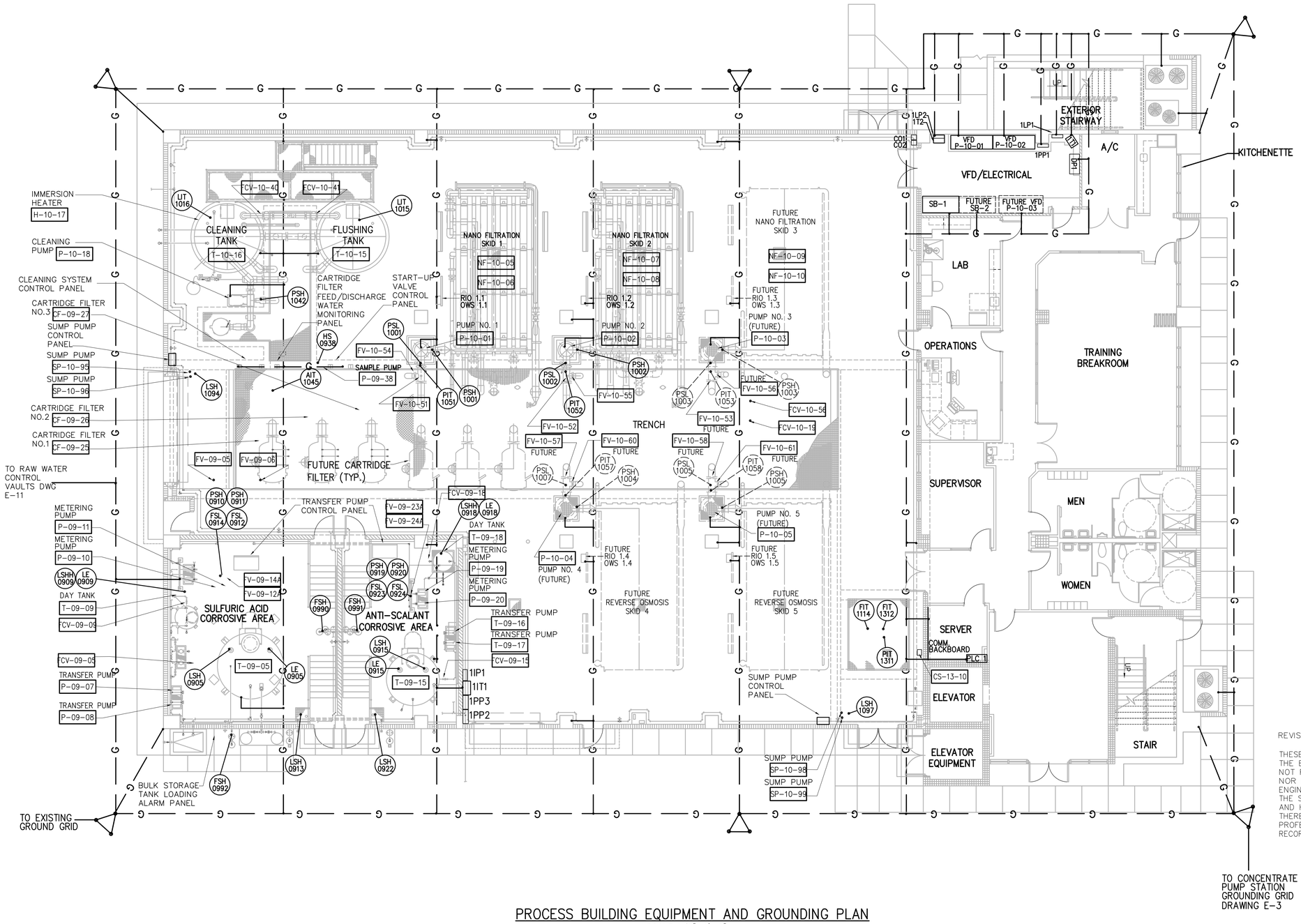

PROCESS BUILDING EQUIPMENT AND GROUNDING PLAN

SCALE: 1/8"=1'-0"

1/8"=1'-0" 8 6 4 2 0 8'

RECORD DRAWINGS

REVISIONS DRAWN BY: E. SMITH DATE: DEC. 2007

THESE RECORD DRAWINGS HAVE BEEN PREPARED, IN PART, ON THE BASIS OF INFORMATION COMPILED BY OTHERS, AND MAY NOT REPRESENT THE EXACT LOCAION, TYPE OF COMPONENT, NOR MANNER OF CONSTRUCTION. THE ENGINEER, OR THE ENGINEER'S REPRESENTATIVE, HAS MADE PERIODIC VISITS TO THE SITE TO OBSERVE THE PROGRESS OF THE EXECUTED WORK, AND HEREBY CERTIFIES, BASED UPON THE KNOWLEDGE DERIVED THERE-FROM AND IN ACCORDANCE WITH THE DEPARTMENT OF PROFESSIONAL REGULATION RULE 21-1-1B.011.(4) THAT THESE RECORD DRAWINGS ACCURATELY REFLECT THE WORK PERFORMED.

NO.	DATE	ISSUED FOR	BY
2	01/08	RECORD DRAWINGS	ES
1	10/03	BID SET	ML

DESIGNED M.E.L.
DRAWN M.E.L.
CHECKED P.F.H.
PROJ. ENGR. P.A.D.

HILLERS ELECTRICAL ENGINEERING, INC.
23257 STATE ROAD 7, SUITE 100
BOCA RATON, FLORIDA 33428
(561) 451-9165
(561) 451-4886 FAX
LICENSE NO: EB 0006877
MARK E. LUTHER P.E.
No. 48801

HAZEN AND SAWYER
Environmental Engineers & Scientists
4000 Hollywood Boulevard, Suite 750N
Hollywood, Florida 33021
Certificate of Authorization Number: 2771

SCALE: AS SHOWN

CONTRACT: 40406
CLIENTS PROJECT:
ENGINEERS PROJECT: 40406
CAD REFERENCE: 40406E07.DWG

CITY OF HALLANDALE BEACH
UTILITIES DEPARTMENT

6 MGD MEMBRANE SOFTENING W.T.P.

PROCESS BUILDING
EQUIPMENT AND GROUNDING PLAN

DATE: JANUARY 2008
SHEET: 117 OF 162
DRAWING: E-7

9/28/2007 3:46 P.M. - 42 HLWD - H:\40406\FIG\TECHMEMO4\40406FIG4-2.dwg - XREFS: - PS 1=1

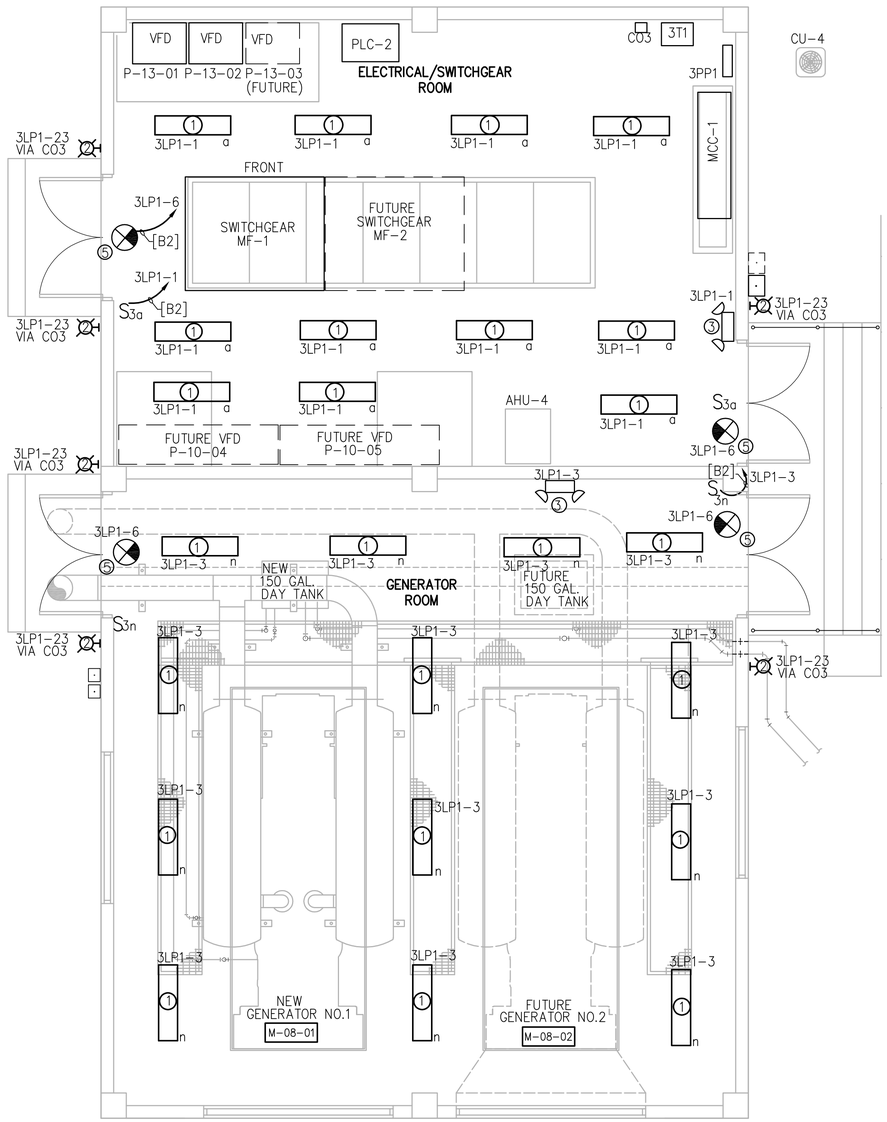

GENERATOR BUILDING LIGHTING PLAN

SCALE: 1/4"=1'-0"

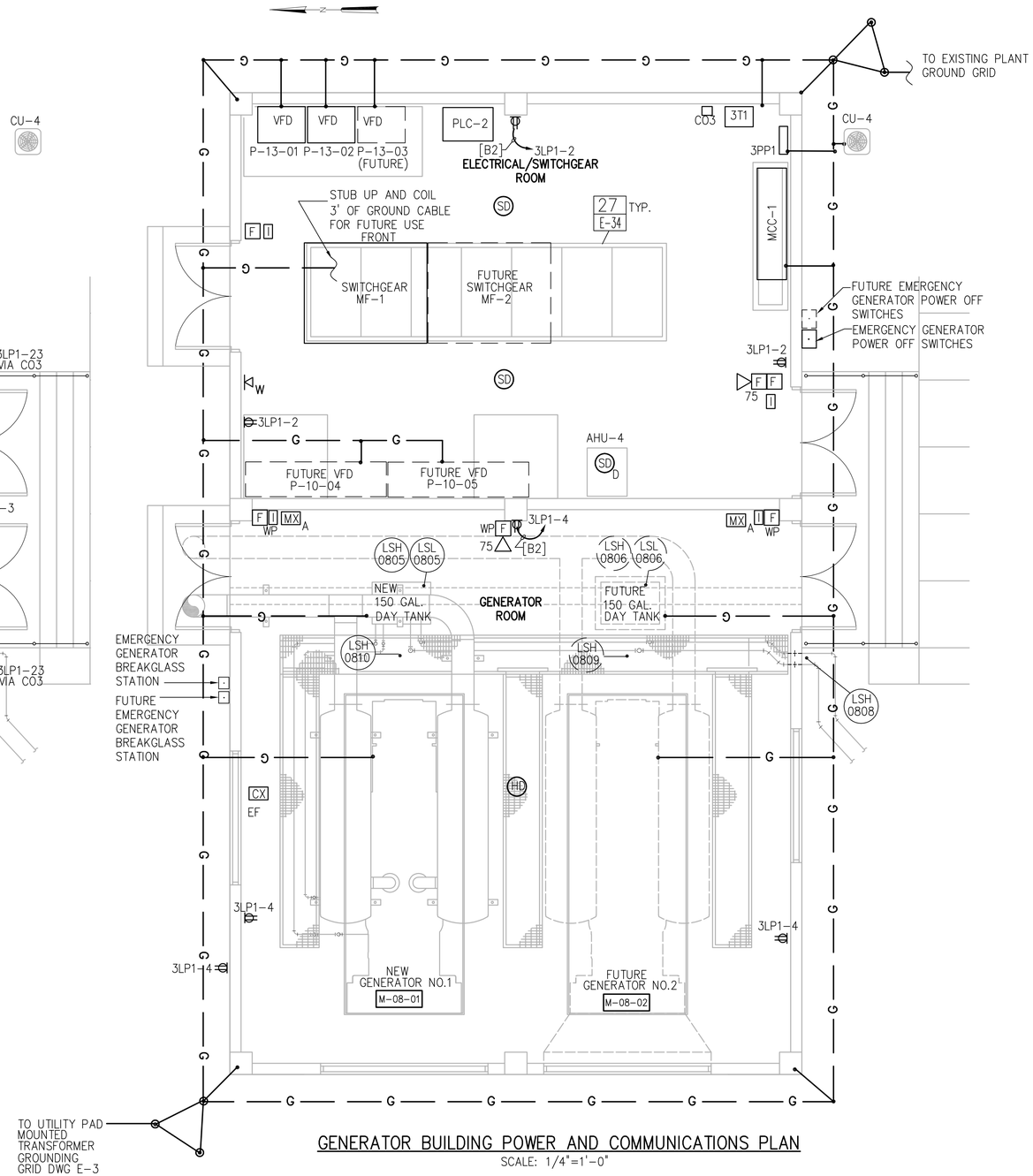

GENERATOR BUILDING POWER AND COMMUNICATIONS PLAN

SCALE: 1/4"=1'-0"

RECORD DRAWINGS

REVISIONS DRAWN BY: E. SMITH DATE: DEC. 2007

THESE RECORD DRAWINGS HAVE BEEN PREPARED, IN PART, ON THE BASIS OF INFORMATION COMPILED BY OTHERS, AND MAY NOT REPRESENT THE EXACT LOCAION, TYPE OF COMPONENT, NOR MANNER OF CONSTRUCTION. THE ENGINEER, OR THE ENGINEER'S REPRESENTATIVE, HAS MADE PERIODIC VISITS TO THE SITE TO OBSERVE THE PROGRESS OF THE EXECUTED WORK, AND HEREBY CERTIFIES, BASED UPON THE KNOWLEDGE DERIVED THERE-FROM AND IN ACCORDANCE WITH THE DEPARTMENT OF PROFESSIONAL REGULATION RULE 21-1-1B.011.(4) THAT THESE RECORD DRAWINGS ACCURATELY REFLECT THE WORK PERFORMED.

1/4"=1'-0" 4 3 2 1 0 4'

NO.	DATE	ISSUED FOR	BY
2	01/08	RECORD DRAWINGS	ES
1	05/04	BID SET	ML

DESIGNED M.E.L.
DRAWN M.E.L.
CHECKED P.F.H.
PROJ. ENGR. P.A.D.

HILLERS ELECTRICAL ENGINEERING, INC.
23257 STATE ROAD 7, SUITE 100
BOCA RATON, FLORIDA 33428
(561) 451-9165
(561) 451-4886 FAX
LICENSE NO: EB 0006877
MARK E. LUTHER P.E.
No. 48801

HAZEN AND SAWYER
Environmental Engineers & Scientists
4000 Hollywood Boulevard, Suite 750N
Hollywood, Florida 33021
Certificate of Authorization Number: 2771

SCALE: AS SHOWN

CONTRACT: 40406
CLIENTS PROJECT:
ENGINEERS PROJECT: 40406
CAD REFERENCE: 40406E08.DWD

CITY OF HALLANDALE BEACH
UTILITIES DEPARTMENT

6 MGD MEMBRANE SOFTENING W.T.P.

GENERATOR BUILDING LIGHTING, POWER AND COMMUNICATIONS PLAN

DATE: JANUARY 2008
SHEET: 118 OF 162
DRAWING: E-8

9/28/2007/3:46 P.M. - 42 HLWD - H:\40406\TGD\TECHMEMO04\40406TG4-2.dwg - XREFS: - PS 1=1

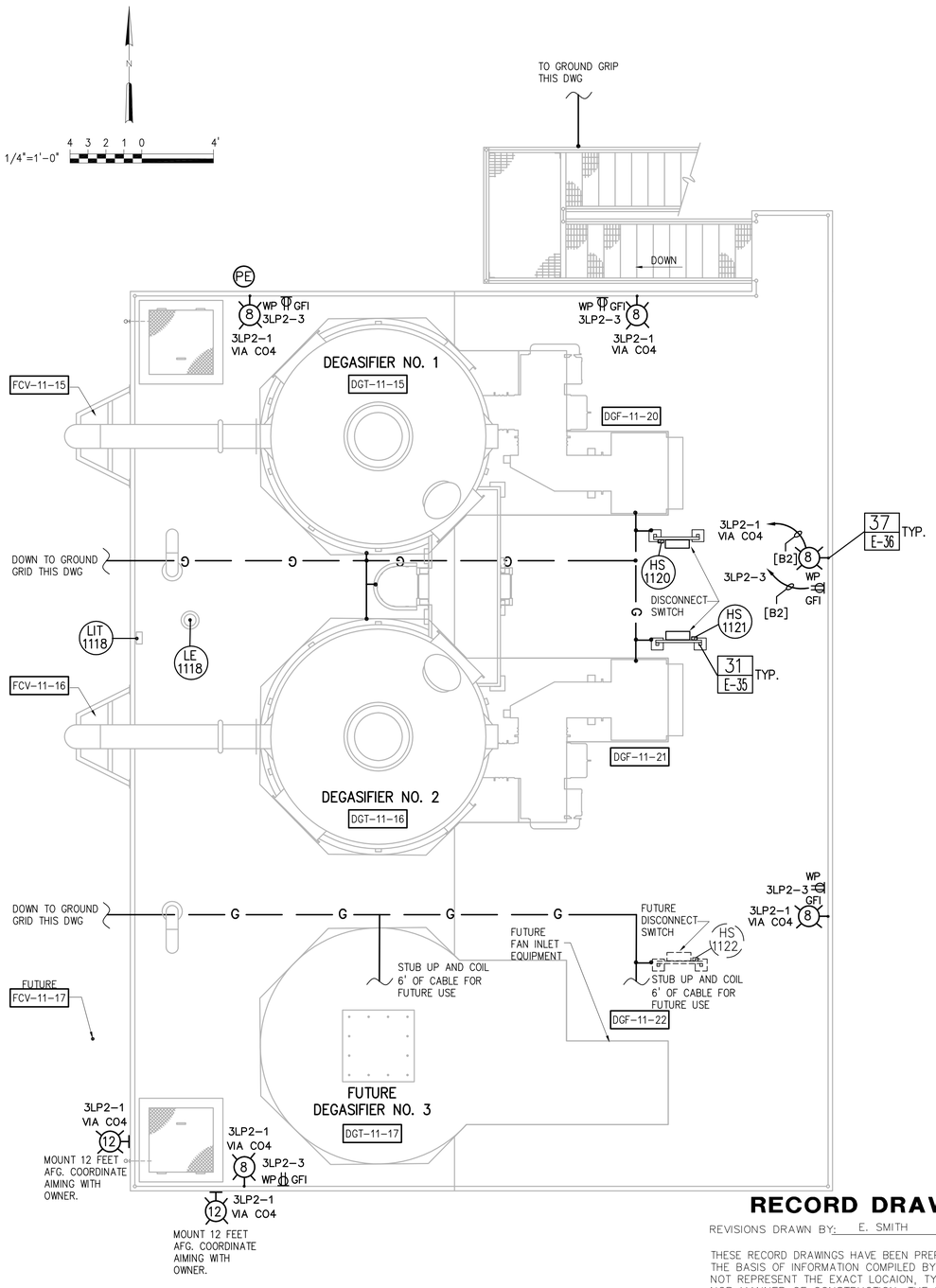

DEGASIFIER UPPER LEVEL ELECTRICAL PLAN

SCALE: 1/4"=1'-0"

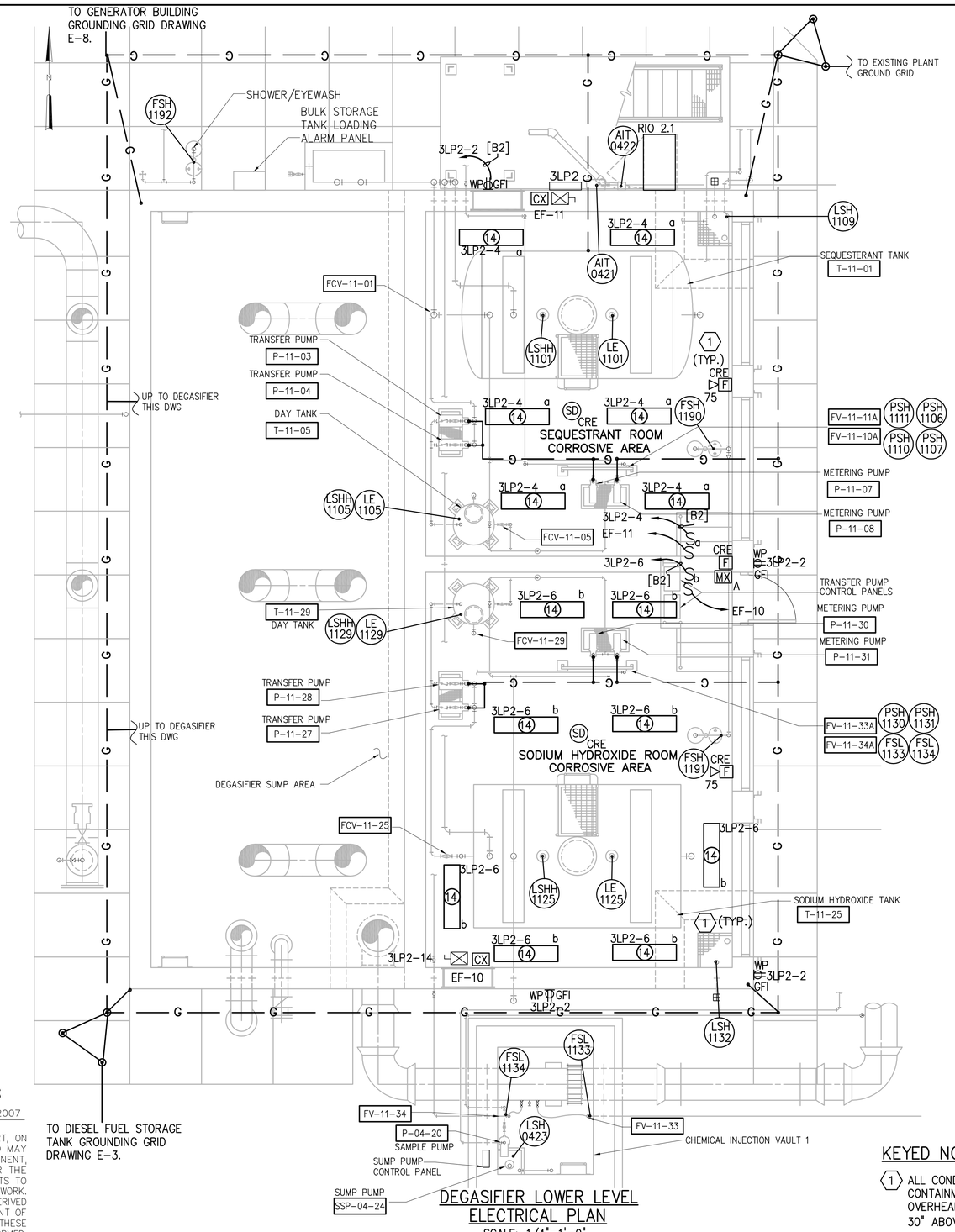

DEGASIFIER LOWER LEVEL ELECTRICAL PLAN

SCALE: 1/4"=1'-0"

RECORD DRAWINGS

REVISIONS DRAWN BY: E. SMITH DATE: DEC. 2007

THESE RECORD DRAWINGS HAVE BEEN PREPARED, IN PART, ON THE BASIS OF INFORMATION COMPILED BY OTHERS, AND MAY NOT REPRESENT THE EXACT LOCAION, TYPE OF COMPONENT, NOR MANNER OF CONSTRUCTION. THE ENGINEER, OR THE ENGINEER'S REPRESENTATIVE, HAS MADE PERIODIC VISITS TO THE SITE TO OBSERVE THE PROGRESS OF THE EXECUTED WORK. AND HEREBY CERTIFIES, BASED UPON THE KNOWLEDGE DERIVED THERE-FROM AND IN ACCORDANCE WITH THE DEPARTMENT OF PROFESSIONAL REGULATION RULE 21-1-1B.011.(4) THAT THESE RECORD DRAWINGS ACCURATELY REFLECT THE WORK PERFORMED.

KEYED NOTES

(1) ALL CONDUIT ENTERING CHEMICAL CONTAINMENT AREA SHALL BE OVERHEAD CONDUIT WITH MINIMUM 30" ABOVE CONTAINMENT.

NO.	DATE	ISSUED FOR	BY
3	01/08	RECORD DRAWINGS	ES
2	11/05	ADD EXHAUST FANS	SFC
1	05/04	BID SET	ML

DESIGNED M.E.L.
DRAWN M.E.L.
CHECKED P.F.H.
PROJ. ENGR. P.A.D.

HILLERS ELECTRICAL ENGINEERING, INC.
23257 STATE ROAD 7, SUITE 100
BOCA RATON, FLORIDA 33428
(561) 451-9165
(561) 451-4886 FAX
LICENSE NO: EB 0006877
MARK E. LUTHER P.E.
No. 48801

HAZEN AND SAWYER
Environmental Engineers & Scientists
4000 Hollywood Boulevard, Suite 750N
Hollywood, Florida 33021
Certificate of Authorization Number: 2771

SCALE: AS SHOWN

CONTRACT: 40406
CLIENTS PROJECT:
ENGINEERS PROJECT: 40406
CAD REFERENCE: 40406E09.DWG

CITY OF HALLANDALE BEACH
UTILITIES DEPARTMENT

6 MGD MEMBRANE SOFTENING W.T.P.

DEGASIFIER STRUCTURE
ELECTRICAL PLAN

DATE: JANUARY 2008
SHEET: 119 OF 162
DRAWING: E-9

9/29/2011 3:46 P.M. - 42 HLND - H:\40406\FIG\ECOMEDACH\40406FIG4-2.dwg - XREFS: - PS 1=1

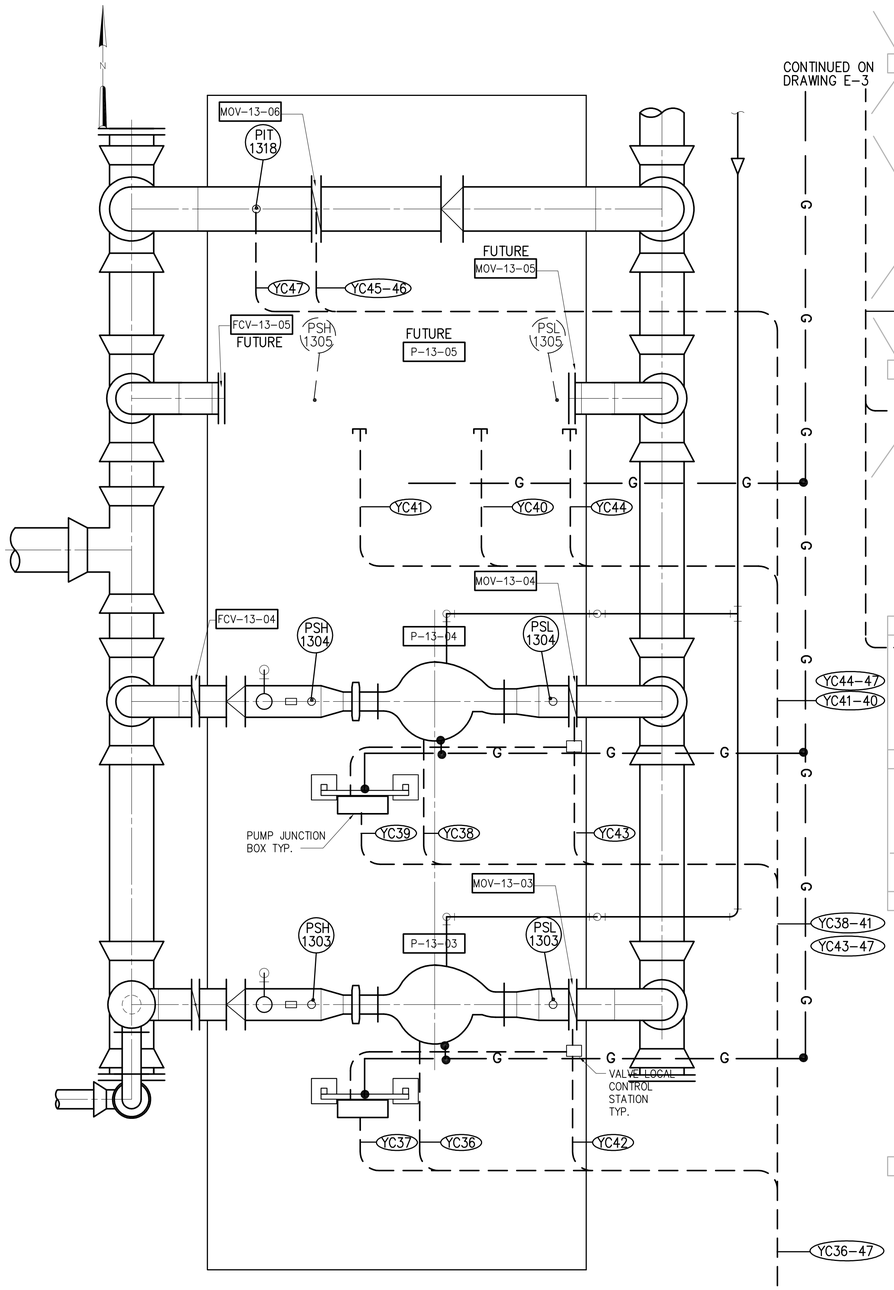

CONCENTRATE PUMP STATION ELECTRICAL PLAN

SCALE: 1/2"=1'-0"

1/2"=1'-0" 2 1 0 2'

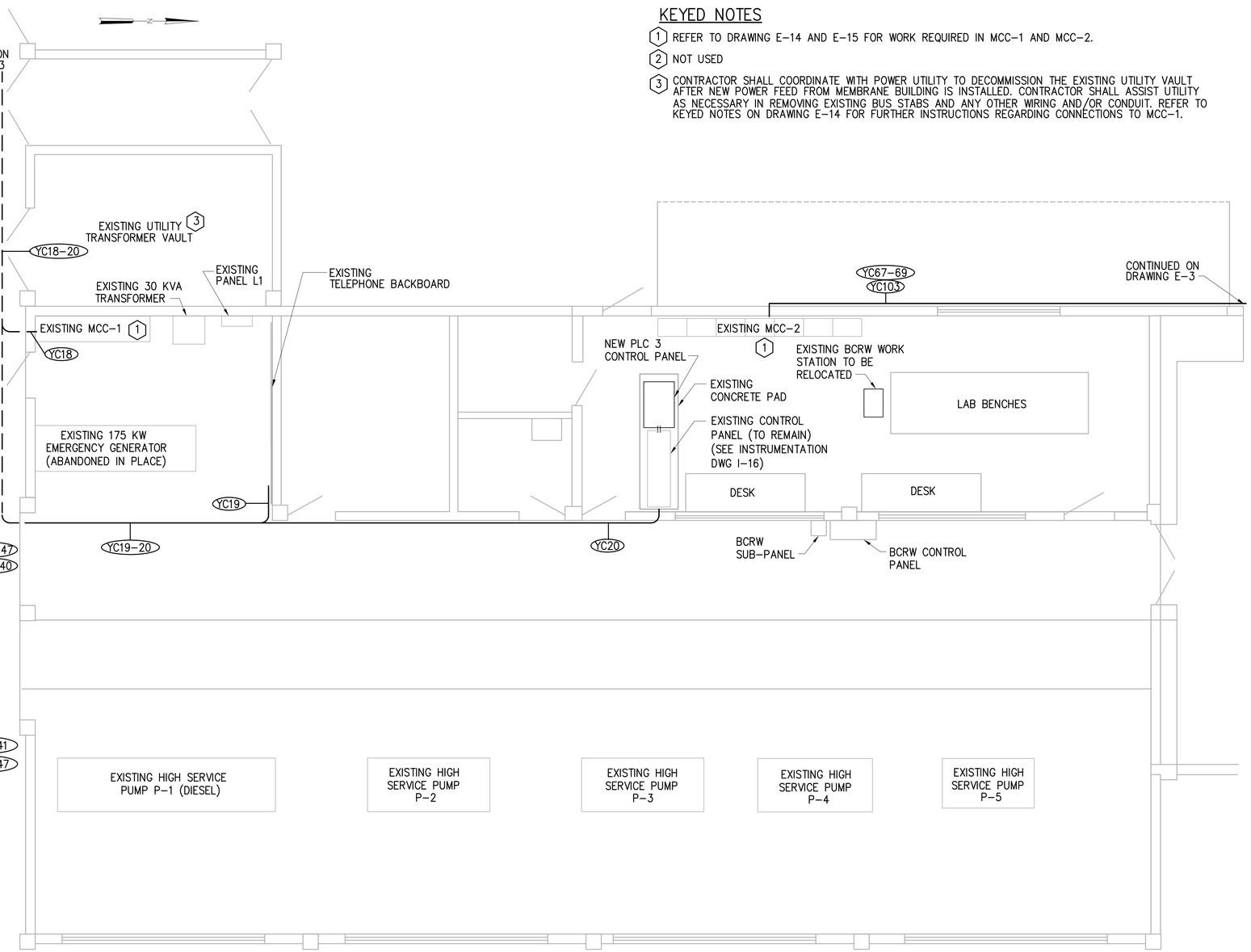

EXISTING HIGH SERVICE PUMP BUILDING ELECTRICAL PLAN

SCALE: 1/4"=1'-0"

1/4"=1'-0" 4 3 2 1 0 4'

KEYED NOTES

1. REFER TO DRAWING E-14 AND E-15 FOR WORK REQUIRED IN MCC-1 AND MCC-2.
2. NOT USED
3. CONTRACTOR SHALL COORDINATE WITH POWER UTILITY TO DECOMMISSION THE EXISTING UTILITY VAULT AFTER NEW POWER FEED FROM MEMBRANE BUILDING IS INSTALLED. CONTRACTOR SHALL ASSIST UTILITY AS NECESSARY IN REMOVING EXISTING BUS STABS AND ANY OTHER WIRING AND/OR CONDUIT. REFER TO KEYED NOTES ON DRAWING E-14 FOR FURTHER INSTRUCTIONS REGARDING CONNECTIONS TO MCC-1.

RECORD DRAWINGS

REVISIONS DRAWN BY: E. SMITH DATE: DEC. 2007

THESE RECORD DRAWINGS HAVE BEEN PREPARED, IN PART, ON THE BASIS OF INFORMATION COMPILED BY OTHERS, AND MAY NOT REPRESENT THE EXACT LOCAION, TYPE OF COMPONENT, NOR MANNER OF CONSTRUCTION. THE ENGINEER, OR THE ENGINEER'S REPRESENTATIVE, HAS MADE PERIODIC VISITS TO THE SITE TO OBSERVE THE PROGRESS OF THE EXECUTED WORK. AND HEREBY CERTIFIES, BASED UPON THE KNOWLEDGE DERIVED THERE-FROM AND IN ACCORDANCE WITH THE DEPARTMENT OF PROFESSIONAL REGULATION RULE 21-1-1B.011.(4) THAT THESE RECORD DRAWINGS ACCURATELY REFLECT THE WORK PERFORMED.

NO.	DATE	ISSUED FOR	BY
3	01/08	RECORD DRAWINGS	ES
2	07/04	ADDENDUM No. 2	ML
1	10/03	BID SET	ML

DESIGNED M.E.L.
DRAWN M.E.L.
CHECKED P.F.H.
PROJ. ENGR. P.A.D.

HILLERS ELECTRICAL ENGINEERING, INC.
23257 STATE ROAD 7, SUITE 100
BOCA RATON, FLORIDA 33428
(561) 451-9165
(561) 451-4886 FAX
LICENSE NO: EB 0006877
MARK E. LUTHER P.E.
No. 48801

HAZEN AND SAWYER
Environmental Engineers & Scientists
4000 Hollywood Boulevard, Suite 750N
Hollywood, Florida 33021
Certificate of Authorization Number: 2771

SCALE: AS NOTED

CONTRACT: 40406
CLIENTS PROJECT:
ENGINEERS PROJECT: 40406
CAD REFERENCE: 40406E010.DWG

CITY OF HALLANDALE BEACH
UTILITIES DEPARTMENT

6 MGD MEMBRANE SOFTENING W.T.P.

ENLARGED ELECTRICAL PLANS

DATE: JANUARY 2008
SHEET: 120 OF 162
DRAWING: E-10

9/28/2001 3:46 P.M. - 42 %WD - H:\40406\YDG\TECHMEMO4\40406E010-2.dwg - XREFS: - PS 1=1

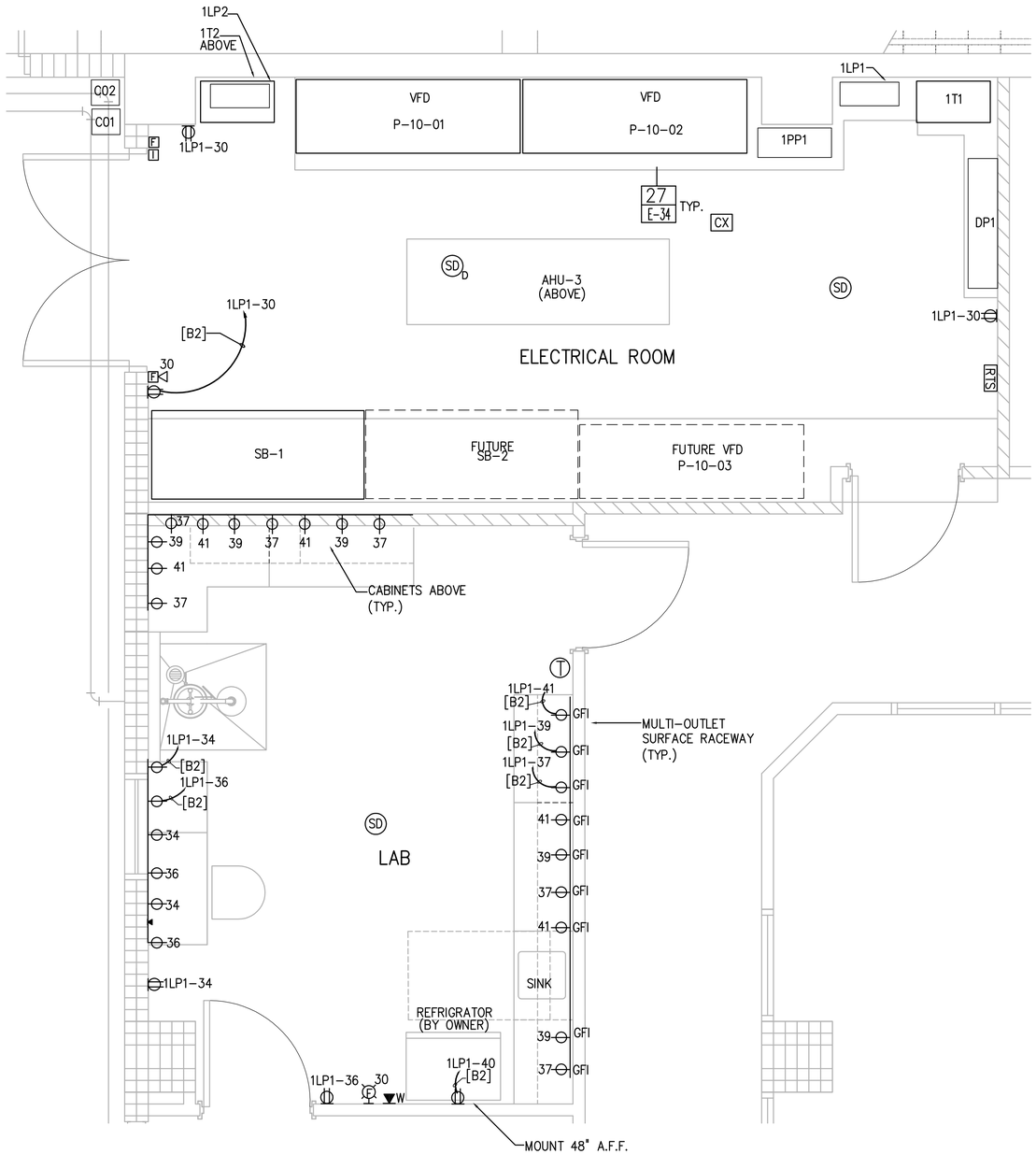

ENLARGED PLAN–MEMBRANE BUILDING LAB AND ELECTRICAL ROOM

SCALE: 1/2"=1'-0"

1/2"=1'-0" 12" 0 1 3'

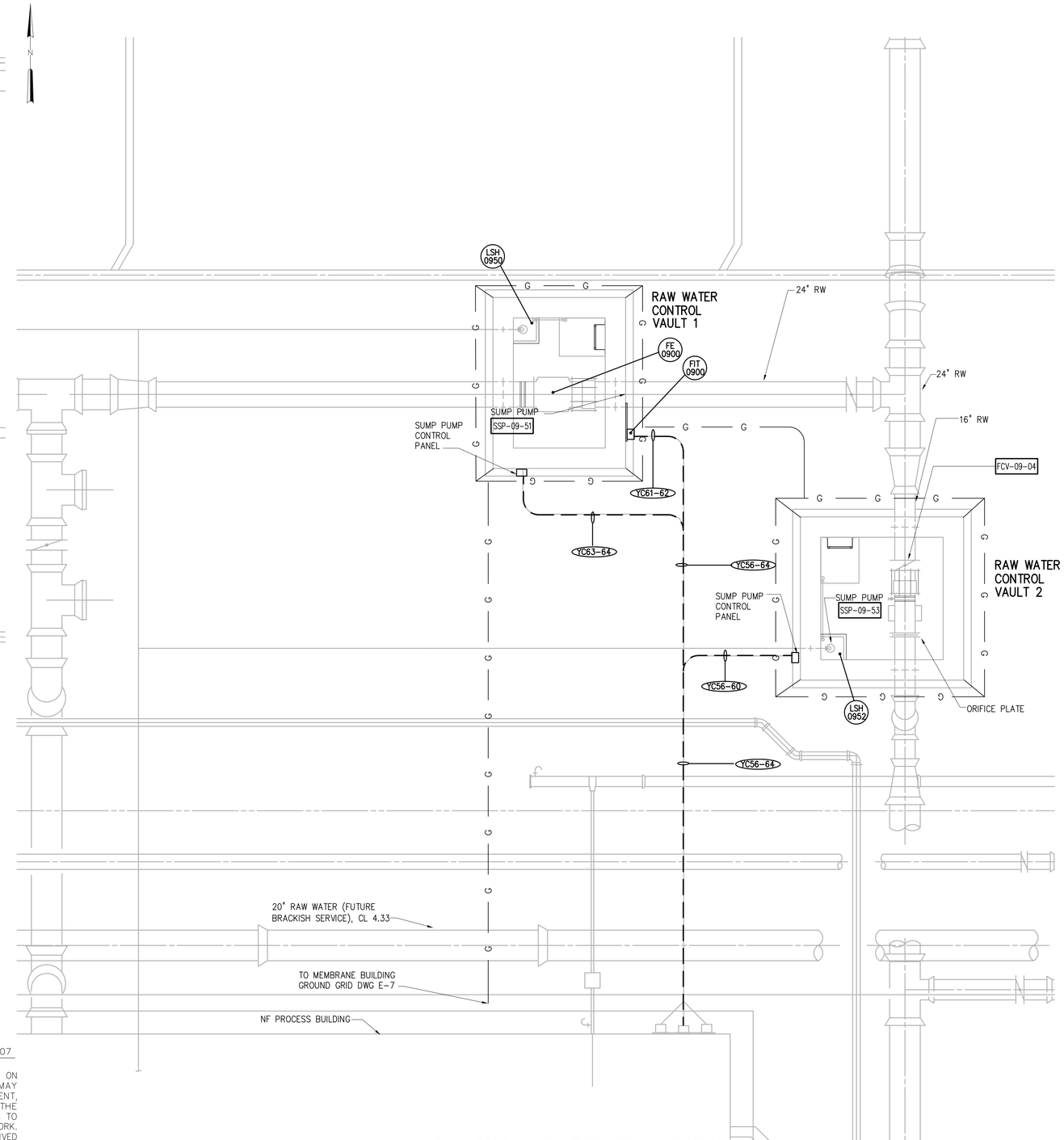

ENLARGED PLAN–RAW WATER VAULTS

SCALE: 1/4"=1'-0"

1/4"=1'-0" 1 0 1 2 3 7'

RECORD DRAWINGS

REVISIONS DRAWN BY: E. SMITH DATE: DEC. 2007

THESE RECORD DRAWINGS HAVE BEEN PREPARED, IN PART, ON THE BASIS OF INFORMATION COMPILED BY OTHERS, AND MAY NOT REPRESENT THE EXACT LOCAION, TYPE OF COMPONENT, NOR MANNER OF CONSTRUCTION. THE ENGINEER, OR THE ENGINEER'S REPRESENTATIVE, HAS MADE PERIODIC VISITS TO THE SITE TO OBSERVE THE PROGRESS OF THE EXECUTED WORK. AND HEREBY CERTIFIES, BASED UPON THE KNOWLEDGE DERIVED THERE–FROM AND IN ACCORDANCE WITH THE DEPARTMENT OF PROFESSIONAL REGULATION RULE 21–1–1B.011.(4) THAT THESE RECORD DRAWINGS ACCURATELY REFLECT THE WORK PERFORMED.

NO.	DATE	ISSUED FOR	BY
2	01/08	RECORD DRAWINGS	ES
1	05/04	BID SET	ML

DESIGNED M.E.L.
DRAWN M.E.L.
CHECKED P.F.H.
PROJ. ENGR. P.A.D.

HILLERS ELECTRICAL ENGINEERING, INC.
23257 STATE ROAD 7, SUITE 100
BOCA RATON, FLORIDA 33428
(561) 451-9165
(561) 451-4886 FAX
LICENSE NO: EB 0006877
MARK E. LUTHER P.E.
No. 48801

HAZEN AND SAWYER
Environmental Engineers & Scientists
4000 Hollywood Boulevard, Suite 750N
Hollywood, Florida 33021
Certificate of Authorization Number: 2771

SCALE: AS SHOWN

CONTRACT: 40406
CLIENTS PROJECT:
ENGINEERS PROJECT: 40406
CAD REFERENCE: 40406E11.DWG

CITY OF HALLANDALE BEACH
UTILITIES DEPARTMENT

6 MGD MEMBRANE SOFTENING W.T.P.

ENLARGED PLANS

DATE: JANUARY 2008
SHEET: 121 OF 162
DRAWING: E-11

9/28/2001/3:46 P.M. – 42 HLWD – H:\40406\FIG\TECHMEMO4\40406FIG4-2.dwg – XREFS: – PS 1=1

KEYED NOTES

1. CONTRACTOR SHALL PROVIDE AND INSTALL CONDUIT FOR ALL FUTURE EQUIPMENT.
2. PLACE CONTROL TRANSFORMERS, RELAYS, UPS AND PLC, ETC. IN MAIN AND GENERATOR SECTION.
3. CONTRACTOR SHALL INSTALL CONDUIT AND MANHOLES PROVIDED BY POWER UTILITY. COORDINATE WITH POWER UTILITY FOR DELIVERY OF CONDUIT. MINIMUM BURIAL DEPTH SHALL BE 36 INCHES BELOW FINISHED GRADE.
4. BREAKER SHALL BE FAULT CURRENT LIMITING TO 15,000A SYMMETRICAL MAXIMUM. EXISTING UTILITY FAULT CURRENT ACCORDING TO FPL RECORDS IS 15,717A AT 480V 3ø.

GENERAL NOTES

1. ALL CIRCUIT BREAKERS IN SWITCHGEAR MF-1 AND MF-2 SHALL BE LSIG TYPE.

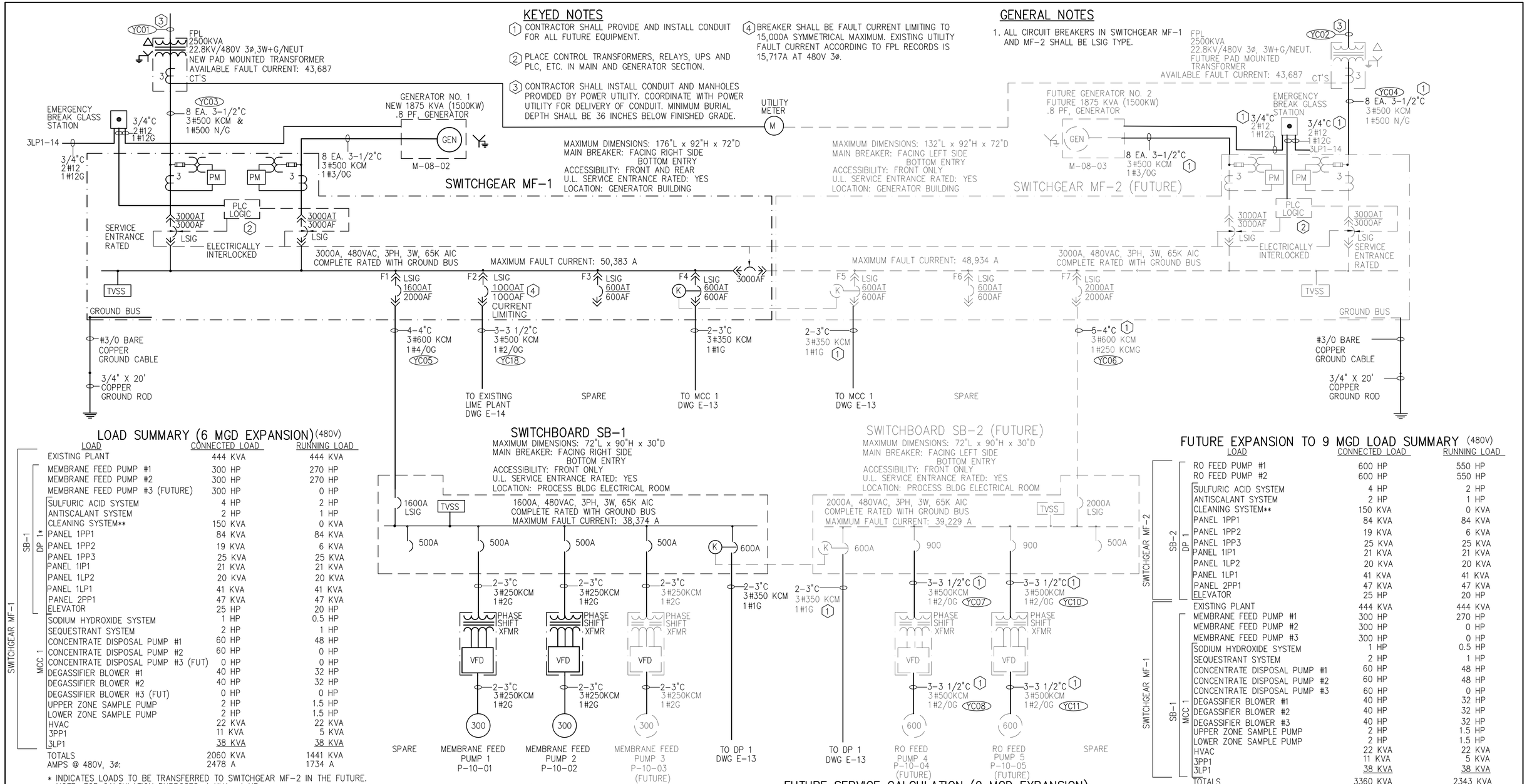

LOAD SUMMARY (6 MGD EXPANSION) (480V)

LOAD	CONNECTED LOAD	RUNNING LOAD
EXISTING PLANT	444 KVA	444 KVA
SWITCHGEAR MF-1 / SB-1 / DP 1*		
MEMBRANE FEED PUMP #1	300 HP	270 HP
MEMBRANE FEED PUMP #2	300 HP	270 HP
MEMBRANE FEED PUMP #3 (FUTURE)	300 HP	0 HP
SULFURIC ACID SYSTEM	4 HP	2 HP
ANTISCALANT SYSTEM	2 HP	1 HP
CLEANING SYSTEM**	150 KVA	0 KVA
PANEL 1PP1	84 KVA	84 KVA
PANEL 1PP2	19 KVA	6 KVA
PANEL 1PP3	25 KVA	25 KVA
PANEL 1IP1	21 KVA	21 KVA
PANEL 1LP2	20 KVA	20 KVA
PANEL 1LP1	41 KVA	41 KVA
PANEL 2PP1	47 KVA	47 KVA
ELEVATOR	25 HP	20 HP
SWITCHGEAR MF-1 / MCC 1		
SODIUM HYDROXIDE SYSTEM	1 HP	0.5 HP
SEQUESTRANT SYSTEM	2 HP	1 HP
CONCENTRATE DISPOSAL PUMP #1	60 HP	48 HP
CONCENTRATE DISPOSAL PUMP #2	60 HP	0 HP
CONCENTRATE DISPOSAL PUMP #3 (FUT)	0 HP	0 HP
DEGASSIFIER BLOWER #1	40 HP	32 HP
DEGASSIFIER BLOWER #2	40 HP	32 HP
DEGASSIFIER BLOWER #3 (FUT)	0 HP	0 HP
UPPER ZONE SAMPLE PUMP	2 HP	1.5 HP
LOWER ZONE SAMPLE PUMP	2 HP	1.5 HP
HVAC	22 KVA	22 KVA
3PP1	11 KVA	5 KVA
3LP1	38 KVA	38 KVA
TOTALS	2060 KVA	1441 KVA
AMPS @ 480V, 3ø:	2478 A	1734 A

* INDICATES LOADS TO BE TRANSFERRED TO SWITCHGEAR MF-2 IN THE FUTURE.
NOTE: FOR CALCULATION PURPOSES, 1 KVA =1 HP
** CLEANING SYSTEM USED WHEN ONE MEMBRANE SKID IS DOWN
MEMBRANE FEED PUMP IS OFF.

NOTES:

1. FOR 9 MGD EXPANSION, A SECOND SERVICE IS REQUIRED FOR MAXIMUM FLEXIBILITY.
2. GENERATORS ARE SIZED SO THAT ONE GENERATOR MAY HANDLE 3/4 OF PLANT REQUIREMENTS IN THE EVENT THAT ONE OF THE 2 IS OUT OF SERVICE.

SERVICE CALCULATION (6 MGD EXPANSION) (480V)

LOAD	CONNECTED LOAD	RUNNING LOAD
EXISTING PLANT	845 KVA	444 KVA
25% NEC 220-35 FACTOR	----	111 KVA
MEMBRANE FEED PUMPS (3 @300HP, MAX 2 RUNNING)	600 HP	540 HP
DP 1	438 KVA	267 KVA
MCC 1	248 KVA	222 KVA
TOTAL	2131 KVA	1528 KVA
SERVICE AMPACITY @ 480V, 3ø:	2696 A	1838 A

FUTURE SERVICE CALCULATION (9 MGD EXPANSION)

LOAD (480V)	CONNECTED LOAD	RUNNING LOAD
EXISTING PLANT	845 KVA	444 KVA
25% NEC 220-35 FACTOR	----	111 KVA
MEMBRANE FEED PUMPS (3 @300HP, MAX 1 RUNNING)	900 HP	270 HP
RO FEED PUMPS (2 @600HP, MAX 2 RUNNING)	1200 HP	1100 HP
DP 1	438 KVA	267 KVA
MCC 1	333 KVA	262 KVA
TOTAL	3716 KVA	2454 KVA
SERVICE AMPACITY @ 480V, 3ø:	4470 A	2952 A

ONE LINE DIAGRAM

NOT TO SCALE

FUTURE EXPANSION TO 9 MGD LOAD SUMMARY (480V)

LOAD	CONNECTED LOAD	RUNNING LOAD
SWITCHGEAR MF-2 / SB-2 / DP 1		
RO FEED PUMP #1	600 HP	550 HP
RO FEED PUMP #2	600 HP	550 HP
SULFURIC ACID SYSTEM	4 HP	2 HP
ANTISCALANT SYSTEM	2 HP	1 HP
CLEANING SYSTEM**	150 KVA	0 KVA
PANEL 1PP1	84 KVA	84 KVA
PANEL 1PP2	19 KVA	6 KVA
PANEL 1PP3	25 KVA	25 KVA
PANEL 1IP1	21 KVA	21 KVA
PANEL 1LP2	20 KVA	20 KVA
PANEL 1LP1	41 KVA	41 KVA
PANEL 2PP1	47 KVA	47 KVA
ELEVATOR	25 HP	20 HP
SWITCHGEAR MF-1 / SB-1 / MCC 1		
EXISTING PLANT	444 KVA	444 KVA
MEMBRANE FEED PUMP #1	300 HP	270 HP
MEMBRANE FEED PUMP #2	300 HP	0 HP
MEMBRANE FEED PUMP #3	300 HP	0 HP
SODIUM HYDROXIDE SYSTEM	1 HP	0.5 HP
SEQUESTRANT SYSTEM	2 HP	1 HP
CONCENTRATE DISPOSAL PUMP #1	60 HP	48 HP
CONCENTRATE DISPOSAL PUMP #2	60 HP	48 HP
CONCENTRATE DISPOSAL PUMP #3	60 HP	0 HP
DEGASSIFIER BLOWER #1	40 HP	32 HP
DEGASSIFIER BLOWER #2	40 HP	32 HP
DEGASSIFIER BLOWER #3	40 HP	32 HP
UPPER ZONE SAMPLE PUMP	2 HP	1.5 HP
LOWER ZONE SAMPLE PUMP	2 HP	1.5 HP
HVAC	22 KVA	22 KVA
3PP1	11 KVA	5 KVA
3LP1	38 KVA	38 KVA
TOTALS	3360 KVA	2343 KVA
AMPS @ 480V, 3ø:	4042 A	2818 A

RECORD DRAWINGS

REVISIONS DRAWN BY: E. SMITH DATE: DEC. 2007

THESE RECORD DRAWINGS HAVE BEEN PREPARED, IN PART, ON THE BASIS OF INFORMATION COMPILED BY OTHERS, AND MAY NOT REPRESENT THE EXACT LOCAION, TYPE OF COMPONENT, NOR MANNER OF CONSTRUCTION. THE ENGINEER, OR THE ENGINEER'S REPRESENTATIVE, HAS MADE PERIODIC VISITS TO THE SITE TO OBSERVE THE PROGRESS OF THE EXECUTED WORK, AND HEREBY CERTIFIES, BASED UPON THE KNOWLEDGE DERIVED THERE-FROM AND IN ACCORDANCE WITH THE DEPARTMENT OF PROFESSIONAL REGULATION RULE 21-1-1B.011.(4) THAT THESE RECORD DRAWINGS ACCURATELY REFLECT THE WORK PERFORMED.

NO.	DATE	ISSUED FOR	BY
2	01/08	RECORD DRAWINGS	ES
1	10/03	BID SET	ML

DESIGNED M.E.L.
DRAWN M.E.L.
CHECKED P.F.H.
PROJ. ENGR. P.A.D.

HILLERS ELECTRICAL ENGINEERING, INC.
23257 STATE ROAD 7, SUITE 100
BOCA RATON, FLORIDA 33428
(561) 451-9165
(561) 451-4886 FAX
LICENSE NO: EB 0006877
MARK E. LUTHER P.E.
No. 48801

HAZEN AND SAWYER
Environmental Engineers & Scientists
4000 Hollywood Boulevard, Suite 750N
Hollywood, Florida 33021
Certificate of Authorization Number: 2771

SCALE: NONE

CONTRACT: 40406
CLIENTS PROJECT:
ENGINEERS PROJECT: 40406
CAD REFERENCE: 40406E12.DWG

CITY OF HALLANDALE BEACH
UTILITIES DEPARTMENT

6 MGD MEMBRANE SOFTENING W.T.P.

ONE LINE DIAGRAM

SHEET 1

DATE: JANUARY 2008
SHEET: 122 OF 162
DRAWING: E-12

KEYED NOTES

1. PROVIDE AND INSTALL REJECTION TYPE FUSES IN DISCONNECT. SIZE FUSES IN ACCORDANCE WITH ELEVATOR MANUFACTURER REQUIREMENTS.
2. CONTRACTOR SHALL PROVIDE AND INSTALL CONDUIT FOR ALL FUTURE EQUIPMENT.
3. COORDINATE FUSE SIZE WITH HVAC EQUIPMENT MANUFACTURER REQUIREMENTS.

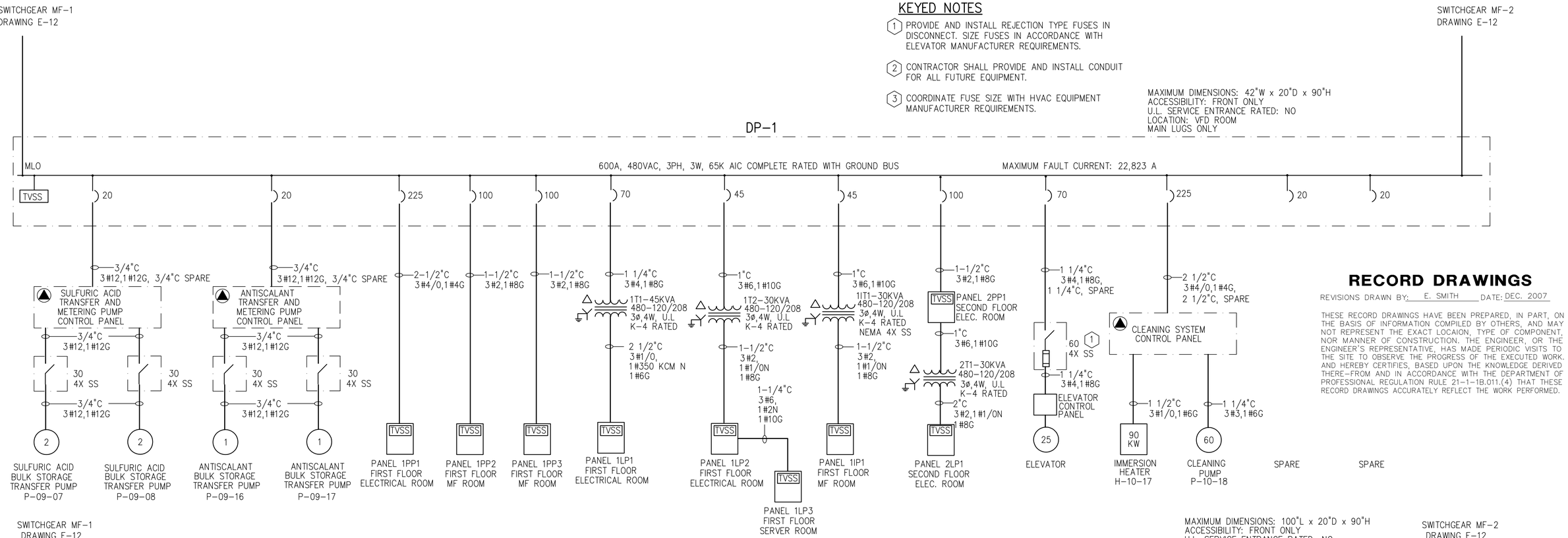

RECORD DRAWINGS

REVISIONS DRAWN BY: E. SMITH DATE: DEC. 2007

THESE RECORD DRAWINGS HAVE BEEN PREPARED, IN PART, ON THE BASIS OF INFORMATION COMPILED BY OTHERS, AND MAY NOT REPRESENT THE EXACT LOCAION, TYPE OF COMPONENT, NOR MANNER OF CONSTRUCTION. THE ENGINEER, OR THE ENGINEER'S REPRESENTATIVE, HAS MADE PERIODIC VISITS TO THE SITE TO OBSERVE THE PROGRESS OF THE EXECUTED WORK. AND HEREBY CERTIFIES, BASED UPON THE KNOWLEDGE DERIVED THERE-FROM AND IN ACCORDANCE WITH THE DEPARTMENT OF PROFESSIONAL REGULATION RULE 21-1-1B.011.(4) THAT THESE RECORD DRAWINGS ACCURATELY REFLECT THE WORK PERFORMED.

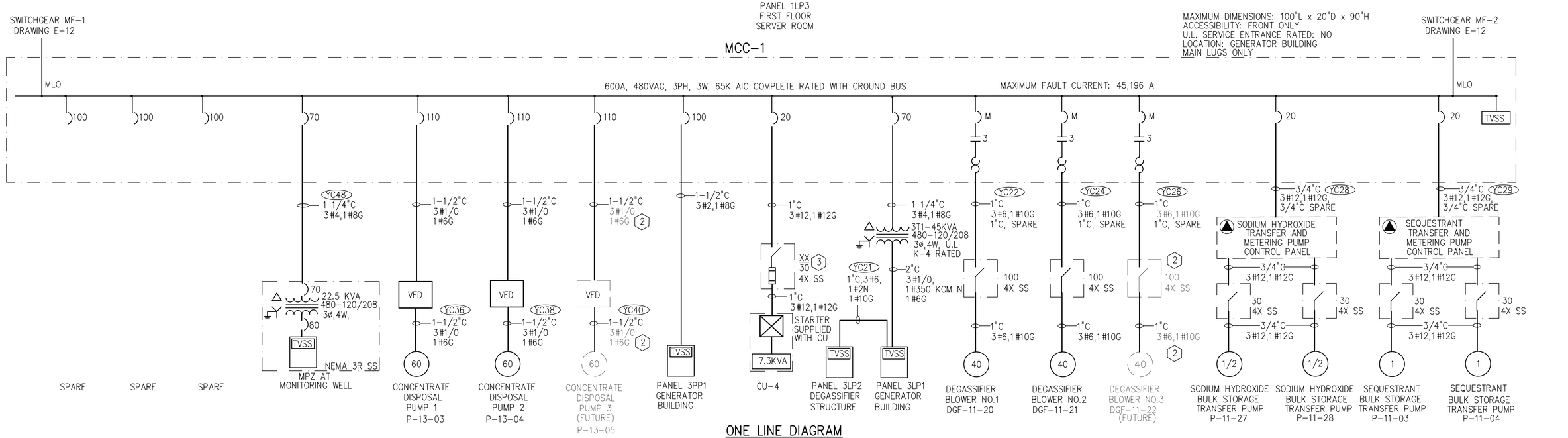

ONE LINE DIAGRAM

NOT TO SCALE

NO.	DATE	ISSUED FOR	BY
2	01/08	RECORD DRAWINGS	ES
1	05/04	BID SET	ML

DESIGNED M.E.L.
DRAWN M.E.L.
CHECKED P.F.H.
PROJ. ENGR. P.A.D.

HILLERS ELECTRICAL ENGINEERING, INC.
23257 STATE ROAD 7, SUITE 100
BOCA RATON, FLORIDA 33428
(561) 451-9165
(561) 451-4886 FAX
LICENSE NO: EB 0006877
MARK E. LUTHER P.E.
No. 48801

HAZEN AND SAWYER
Environmental Engineers & Scientists
4000 Hollywood Boulevard, Suite 750N
Hollywood, Florida 33021
Certificate of Authorization Number: 2771

SCALE: NONE

CONTRACT: 40406
CLIENTS PROJECT:
ENGINEERS PROJECT: 40406
CAD REFERENCE: 40406E13.DWG

CITY OF HALLANDALE BEACH
UTILITIES DEPARTMENT

6 MGD MEMBRANE SOFTENING W.T.P.

ONE LINE DIAGRAM

SHEET 2

DATE: JANUARY 2008
SHEET: 123 OF 162
DRAWING: E-13

9/29/2001/3:46 P.M. - 42 HLWD - H:\40406\FIG\ECOMEMCA\40406FIG4-2.dwg - XREFS: - PS 1=1

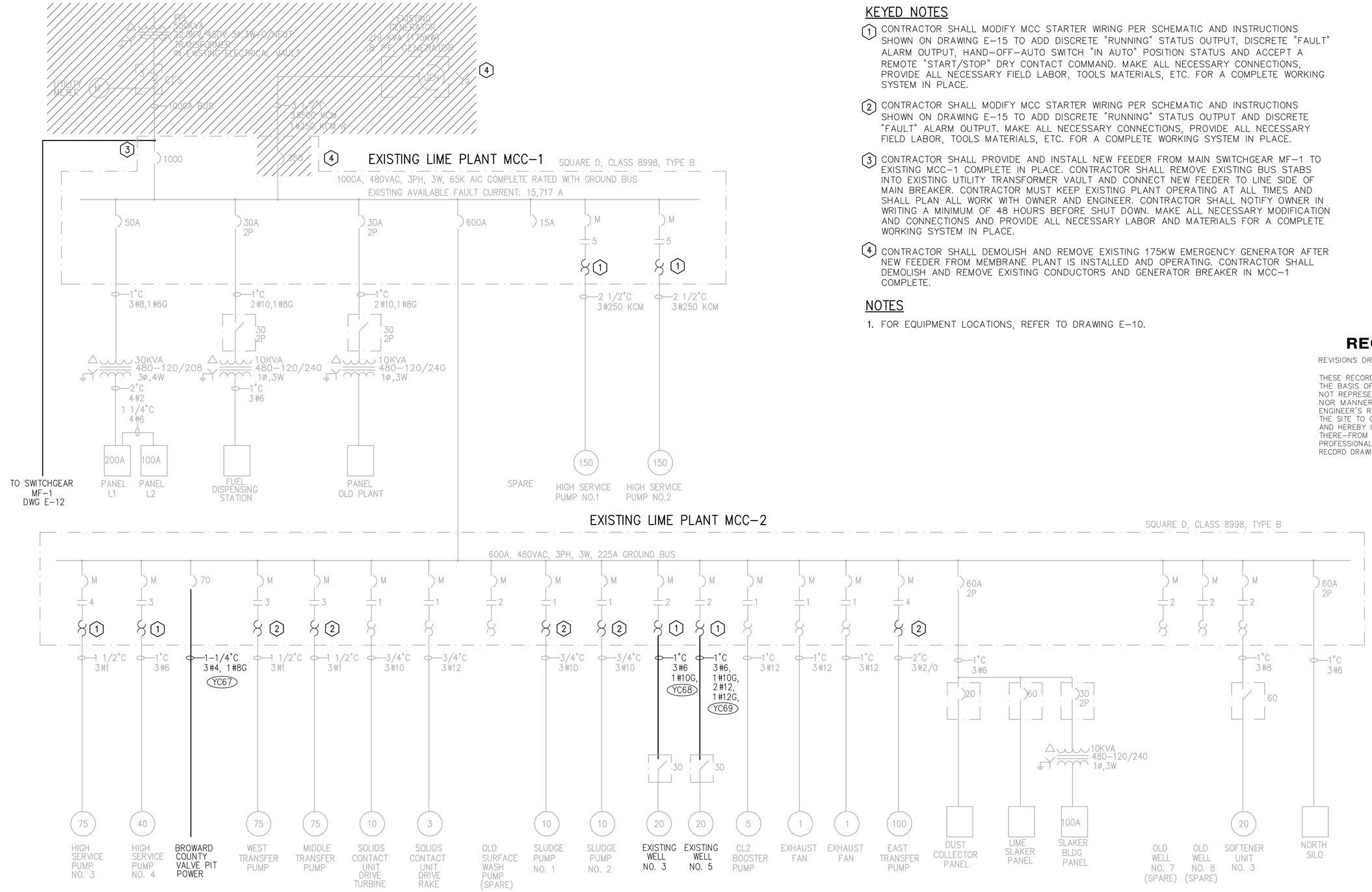

ONE LINE DIAGRAM – EXISTING LIME PLANT

NOT TO SCALE

KEYED NOTES

1. CONTRACTOR SHALL MODIFY MCC STARTER WIRING PER SCHEMATIC AND INSTRUCTIONS SHOWN ON DRAWING E-15 TO ADD DISCRETE "RUNNING" STATUS OUTPUT, DISCRETE "FAULT" ALARM OUTPUT, HAND-OFF-AUTO SWITCH "IN AUTO" POSITION STATUS AND ACCEPT A REMOTE "START/STOP" DRY CONTACT COMMAND. MAKE ALL NECESSARY CONNECTIONS, PROVIDE ALL NECESSARY FIELD LABOR, TOOLS MATERIALS, ETC. FOR A COMPLETE WORKING SYSTEM IN PLACE.

2. CONTRACTOR SHALL MODIFY MCC STARTER WIRING PER SCHEMATIC AND INSTRUCTIONS SHOWN ON DRAWING E-15 TO ADD DISCRETE "RUNNING" STATUS OUTPUT AND DISCRETE "FAULT" ALARM OUTPUT. MAKE ALL NECESSARY CONNECTIONS, PROVIDE ALL NECESSARY FIELD LABOR, TOOLS MATERIALS, ETC. FOR A COMPLETE WORKING SYSTEM IN PLACE.

3. CONTRACTOR SHALL PROVIDE AND INSTALL NEW FEEDER FROM MAIN SWITCHGEAR MF-1 TO EXISTING MCC-1 COMPLETE IN PLACE. CONTRACTOR SHALL REMOVE EXISTING BUS STABS INTO EXISTING UTILITY TRANSFORMER VAULT AND CONNECT NEW FEEDER TO LINE SIDE OF MAIN BREAKER. CONTRACTOR MUST KEEP EXISTING PLANT OPERATING AT ALL TIMES AND SHALL PLAN ALL WORK WITH OWNER AND ENGINEER. CONTRACTOR SHALL NOTIFY OWNER IN WRITING A MINIMUM OF 48 HOURS BEFORE SHUT DOWN. MAKE ALL NECESSARY MODIFICATION AND CONNECTIONS AND PROVIDE ALL NECESSARY LABOR AND MATERIALS FOR A COMPLETE WORKING SYSTEM IN PLACE.

4. CONTRACTOR SHALL DEMOLISH AND REMOVE EXISTING 175KW EMERGENCY GENERATOR AFTER NEW FEEDER FROM MEMBRANE PLANT IS INSTALLED AND OPERATING. CONTRACTOR SHALL DEMOLISH AND REMOVE EXISTING CONDUCTORS AND GENERATOR BREAKER IN MCC-1 COMPLETE.

NOTES

1. FOR EQUIPMENT LOCATIONS, REFER TO DRAWING E-10.

LEGEND

- DEMOLITION
- NEW
- EXISTING

RECORD DRAWINGS

REVISIONS DRAWN BY: E. SMITH DATE: DEC. 2007

THESE RECORD DRAWINGS HAVE BEEN PREPARED, IN PART, ON THE BASIS OF INFORMATION COMPILED BY OTHERS, AND MAY NOT REPRESENT THE EXACT LOCAION, TYPE OF COMPONENT, NOR MANNER OF CONSTRUCTION. THE ENGINEER, OR THE ENGINEER'S REPRESENTATIVE, HAS MADE PERIODIC VISITS TO THE SITE TO OBSERVE THE PROGRESS OF THE EXECUTED WORK. AND HEREBY CERTIFIES, BASED UPON THE KNOWLEDGE DERIVED THERE-FROM AND IN ACCORDANCE WITH THE DEPARTMENT OF PROFESSIONAL REGULATION RULE 21-1-1B.011.(4) THAT THESE RECORD DRAWINGS ACCURATELY REFLECT THE WORK PERFORMED.

NO.	DATE	ISSUED FOR	BY
2	01/08	RECORD DRAWINGS	ES
1	10/03	BID SET	ML

DESIGNED M.E.L.
DRAWN M.E.L.
CHECKED P.F.H.
PROJ. ENGR. P.A.D.

HILLERS ELECTRICAL ENGINEERING, INC.
23257 STATE ROAD 7, SUITE 100
BOCA RATON, FLORIDA 33428
(561) 451-9165
(561) 451-4886 FAX
LICENSE NO: EB 0006877
MARK E. LUTHER P.E.
No. 48801

HAZEN AND SAWYER
Environmental Engineers & Scientists
4000 Hollywood Boulevard, Suite 750N
Hollywood, Florida 33021
Certificate of Authorization Number: 2771

SCALE: NONE

CONTRACT: 40406
CLIENTS PROJECT:
ENGINEERS PROJECT: 40406
CAD REFERENCE: 40406E14.DWG

CITY OF HALLANDALE BEACH
UTILITIES DEPARTMENT

6 MGD MEMBRANE SOFTENING W.T.P.

ONE LINE DIAGRAM
EXISTING PLANT

DATE: JANUARY 2008
SHEET: 124 OF 162
DRAWING: E-14

9/28/2001/3:46 P.M. – 42 HLWD – H:\40406\YDG\TECHMEMO\40406FIG4-2.dwg – XREFS: – PS 1=1

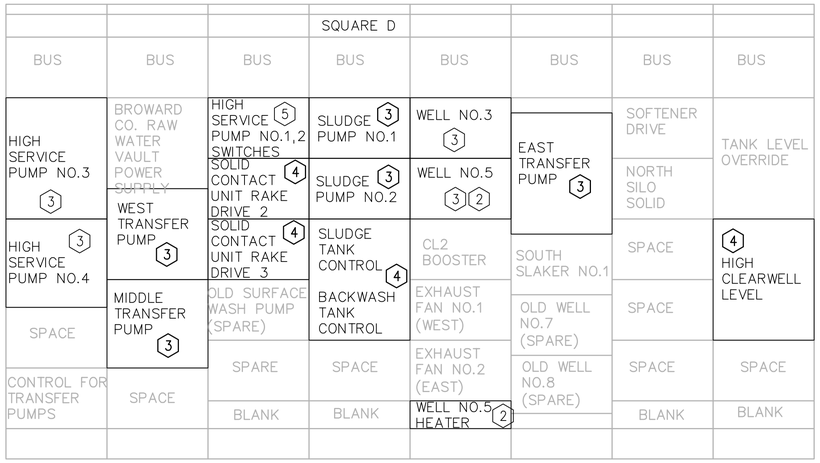

NOTE: EXISTING MCC IS 13 INCHES DEEP.

EXISTING MCC NO.2 (LIME PLANT CONTROL ROOM)

NOT TO SCALE

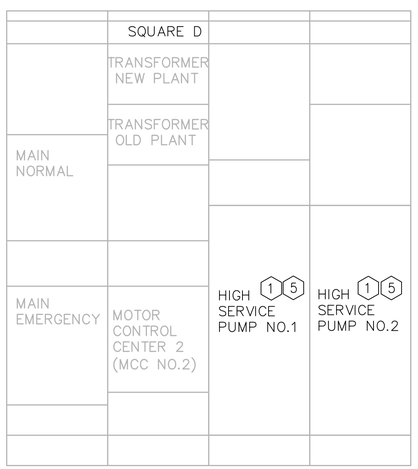

EXISTING MCC NO.1 (LIME PLANT GENERATOR ROOM)

NOT TO SCALE

RECORD DRAWINGS

REVISIONS DRAWN BY: E. SMITH DATE: DEC. 2007

THESE RECORD DRAWINGS HAVE BEEN PREPARED, IN PART, ON THE BASIS OF INFORMATION COMPILED BY OTHERS, AND MAY NOT REPRESENT THE EXACT LOCAION, TYPE OF COMPONENT, NOR MANNER OF CONSTRUCTION. THE ENGINEER, OR THE ENGINEER'S REPRESENTATIVE, HAS MADE PERIODIC VISITS TO THE SITE TO OBSERVE THE PROGRESS OF THE EXECUTED WORK. AND HEREBY CERTIFIES, BASED UPON THE KNOWLEDGE DERIVED THERE-FROM AND IN ACCORDANCE WITH THE DEPARTMENT OF PROFESSIONAL REGULATION RULE 21-1-1B.011.(4) THAT THESE RECORD DRAWINGS ACCURATELY REFLECT THE WORK PERFORMED.

KEYED NOTES

(1) CONTRACTOR SHALL REPLACE EXISTING MCC STARTER WITH NEW SOLID STATE REDUCED VOLTAGE STARTER IN EXISTING MCC CUBICLE SPACE, COMPLETE IN PLACE. NEW SOFTSTART SHALL BE WIRED PER SCHEMATIC SHOWN ON THIS DRAWING. CONTRACTOR SHALL VERIFY EXISTING STARTER BUCKET WIRING, INCLUDING ALL EXISTING EXTERNAL INTERFACE SIGNALS, AND SHALL SUBMIT AN AS-BUILT WIRING SCHEMATIC AND A PROPOSED WIRING SCHEMATIC TO THE ENGINEER FOR APPROVAL PRIOR TO COMMENCING STARTER MODIFICATIONS. EXISTING EXTERNAL CONNECTIONS SUCH AS MOTOR SPACE HEATERS, MOTOR WINDING THERMAL PROTECTION, ETC. SHALL BE RE-CONNECTED IN THE STARTER CONTROL CIRCUIT EVEN IF IT IS NOT SHOWN. THE CONTRACTOR SHALL MAINTAIN ACCURATE AS-BUILT DRAWINGS OF ALL MODIFIED STARTER BUCKETS AND SHALL TURN OVER AUTOCAD DRAFTED COPIES OF THE AS-BUILT DRAWINGS TO THE OWNER. CONTRACTOR MAY USE NEIGHBORING CUBICLES FOR CONTROL DEVICES, OR AT HIS DISCRETION, MAY ADD A CONTROL PANEL NEXT TO THE MCC. IF ANY CONTROL DEVICES ARE TO RESIDE EXTERNAL TO THE MCC BUCKET IT CONTROLS, THE CONTRACTOR SHALL LABEL MCC BUCKET AS TO WHERE THE EXTERNAL CONTROL COMPONENTS ARE. MAKE ALL NECESSARY CONNECTIONS, PROVIDE ALL NECESSARY FIELD LABOR, TOOLS MATERIALS, ETC. FOR A COMPLETE WORKING SYSTEM IN PLACE. SOFT START SHALL BE CUTLER-HAMMER SOLID STATE SOFT START S801T24N3S INSTALLED IN A COMPLETE MCC BUCKET WITH ALL CONTROL DEVICES, READY TO BE INSTALLED IN THE EXISTING STARTER LOCATION.

(2) CONTRACTOR SHALL RE-CONNECT THE MOTOR SPACE HEATER TO THE STARTER FOR WELL NO.5. MAKE ALL NECESSARY CONNECTION FOR A COMPLETE WORKING SYSTEM IN PLACE.

(3) CONTRACTOR SHALL REPLACE EXISTING MCC STARTER WITH NEW STARTER WIRED AS PER SCHEMATIC THIS DRAWING. CONTRACTOR SHALL VERIFY ACTUAL STARTER BUCKET WIRING, INCLUDING ALL EXISTING EXTERNAL INTERFACE SIGNALS, AND SHALL SUBMIT AN AS-BUILT WIRING SCHEMATIC AND A PROPOSED WIRING SCHEMATIC TO THE ENGINEER FOR APPROVAL PRIOR TO COMMENCING STARTER MODIFICATIONS. EXISTING EXTERNAL CONNECTIONS SUCH AS MOTOR SPACE HEATERS, MOTOR WINDING THERMAL PROTECTION, ETC. SHALL BE RE-CONNECTED IN THE STARTER CONTROL CIRCUIT EVEN IF IT IS NOT SHOWN. THE CONTRACTOR SHALL MAINTAIN ACCURATE AS-BUILT DRAWINGS OF ALL MODIFIED STARTER BUCKETS AND SHALL TURN OVER AUTOCAD DRAFTED COPIES OF THE AS-BUILT DRAWINGS TO THE OWNER. CONTRACTOR MAY USE NEIGHBORING CUBICLES FOR ADDITIONAL MOUNTING SPACE FOR CONTROL DEVICES, OR AT HIS DISCRETION, MAY ADD A CONTROL PANEL NEXT TO THE MCC. IF ANY CONTROL DEVICES ARE TO RESIDE EXTERNAL TO THE MCC BUCKET IT CONTROLS, THE CONTRACTOR SHALL LABEL MCC BUCKET AS TO WHERE THE EXTERNAL CONTROL COMPONENTS ARE. MAKE ALL NECESSARY CONNECTIONS, PROVIDE ALL NECESSARY FIELD LABOR, TOOLS MATERIALS, ETC. FOR A COMPLETE WORKING SYSTEM IN PLACE. FOR HIGH SERVICE PUMP 3, STARTER SHALL BE CUTLER-HAMMER MODEL N101ES3P3A; FOR HIGH SERVICE PUMP 4, STARTER SHALL BE N101ES3M3A; FOR WELLS 3 & 5 SLUDGE PUMPS 1 & 2 AND TRANSFER PUMPS EAST, MIDDLE AND WEST, STARTER SHALL BE CUTLER-HAMMER MODEL N101DS2K3A.

(4) CONTRACTOR SHALL OBTAIN THE FOLLOWING DRY CONTACT OUTPUT STATUS FROM THE EXISTING MCC CUBICLE BY EITHER ADDING NEW CONTROL RELAYS OR REPLACING EXISTING CONTROL RELAYS WITH NEW UNITS CONTAINING ADDITIONAL NORMALLY OPEN DRY CONTACTS. CONTRACTOR SHALL NOT ALTER EXISTING CONTROL FUNCTIONS. THE INTENT IS TO OBTAIN SIGNALS EXISTING IN THE CUBICLES ALREADY. CONTRACTOR SHALL VERIFY ACTUAL CUBICLE WIRING AND SHALL SUBMIT AN AS-BUILT WIRING SCHEMATIC AND A PROPOSED WIRING SCHEMATIC TO THE ENGINEER FOR APPROVAL PRIOR TO COMMENCING CUBICLE MODIFICATIONS. THE CONTRACTOR SHALL MAINTAIN ACCURATE AS-BUILT DRAWINGS OF ALL MODIFIED STARTER BUCKETS AND SHALL TURN OVER AUTOCAD DRAFTED COPIES OF THE AS-BUILT DRAWINGS TO THE OWNER. CONTRACTOR MAY USE NEIGHBORING CUBICLES FOR ADDITIONAL MOUNTING SPACE FOR CONTROL DEVICES, OR AT HIS DISCRETION, MAY ADD A CONTROL PANEL NEXT TO THE MCC. IF ANY CONTROL DEVICES ARE TO RESIDE EXTERNAL TO THE MCC BUCKET IT CONTROLS, THE CONTRACTOR SHALL LABEL MCC BUCKET AS TO WHERE THE EXTERNAL CONTROL COMPONENTS ARE. MAKE ALL NECESSARY CONNECTIONS, PROVIDE ALL NECESSARY FIELD LABOR, TOOLS MATERIALS, ETC. FOR A COMPLETE WORKING SYSTEM IN PLACE.

SOLID CONTACT UNIT NO.2
- RAKE DRIVE RUNNING (DI)
- TURBINE DRIVE RUNNING (DI)

SOLID CONTACT UNIT NO.3
- RAKE DRIVE RUNNING (DI)

SLUDGE TANK
- PUMP STOP (DI)
- DELAY LEVEL (DI)
- LEAD PUMP START (DI)
- LAG PUMP START (DI)
- HIGH LEVEL (DI)

BACKWASH TANK
- LOW LEVEL (DI)
- HIGH LEVEL (DI)
- VALVE V-1 OPEN (DI)
- OPEN/CLOSE VALVE V-1 (DO)
- PUMP NO.1 CALLED (DI)
- PUMP NO.2 CALLED (DI)

CLEARWELL
- HIGH CLEARWELL ALARM (DI)

(5) EXISTING HAND-OFF-REMOTE AND MOMENTARY START/STOP SWITCHES FOR HIGH SERVICE PUMPS NO. 1 AND NO. 2 ARE LOCATED IN EXISTING MCC NO.2. CONTRACTOR SHALL KEEP THIS CONFIGURATION WHEN RE-WIRING STARTER.

NOTES

1. CONTRACTOR SHALL USE ONE OF THE FOLLOWING FIRMS TO PERFORM THE MODIFICATIONS TO THE EXISTING MCC NO. 1 AND NO. 2. NO OTHER FIRMS WILL BE ACCEPTABLE:

   CUTLER-HAMMER ENGINEERING SERVICES (CHESS)

   GENERAL ELECTRIC INDUSTRIAL SERVICES (GE INDUSTRIAL)

   CC CONTROL CORPORATION (CC CONTROL)

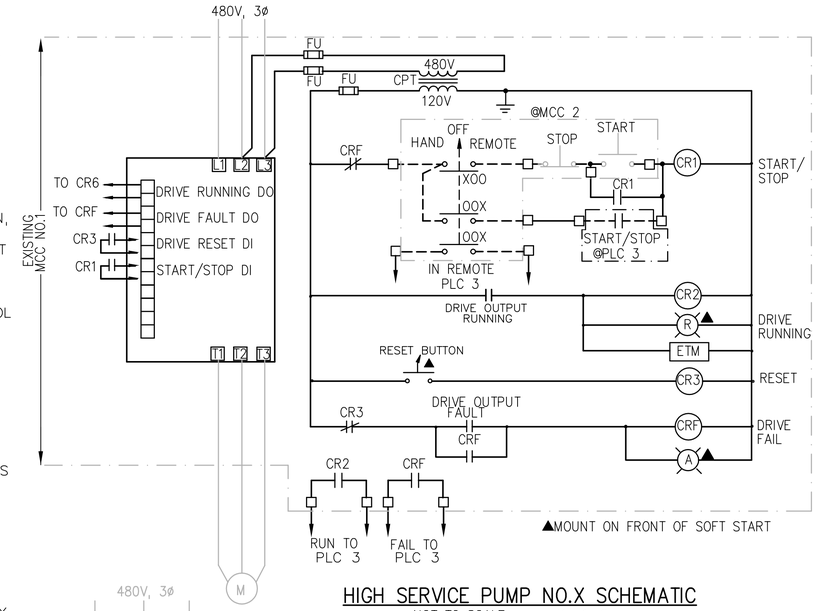

HIGH SERVICE PUMP NO.X SCHEMATIC

NOT TO SCALE X= 1, 2

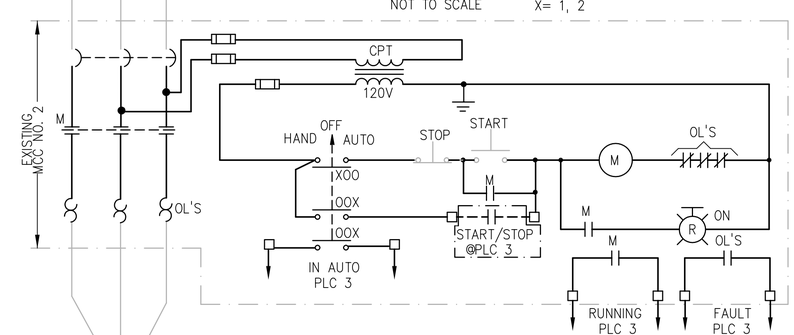

HIGH SERVICE PUMP NO.X SCHEMATIC

X= 3, 4

WELL PUMP NO.X SCHEMATIC (2)

X= 3, 5

NOT TO SCALE

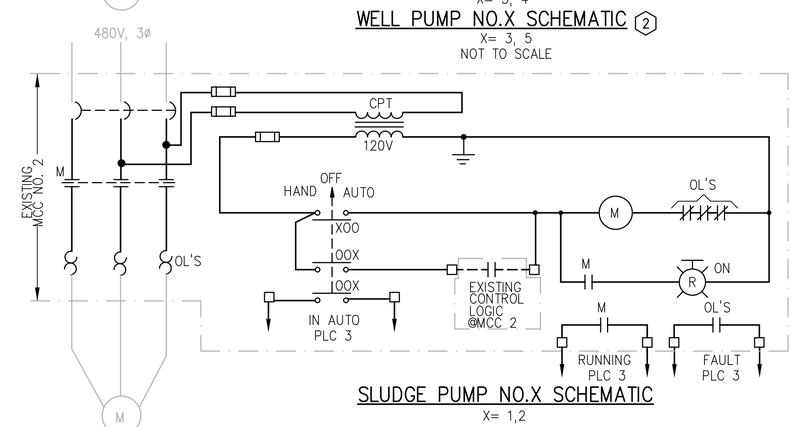

SLUDGE PUMP NO.X SCHEMATIC

X= 1,2

TRANSFER PUMP X SCHEMATIC

X= EAST, MIDDLE, WEST

NOT TO SCALE

NO.	DATE	ISSUED FOR	BY
2	01/08	RECORD DRAWINGS	ES
1	10/03	BID SET	ML

DESIGNED M.E.L.
DRAWN M.E.L.
CHECKED P.F.H.
PROJ. ENGR. P.A.D.

HILLERS ELECTRICAL ENGINEERING, INC.
23257 STATE ROAD 7, SUITE 100
BOCA RATON, FLORIDA 33428
(561) 451-9165
(561) 451-4886 FAX
LICENSE NO: EB 0006877
MARK E. LUTHER P.E.
No. 48801

HAZEN AND SAWYER
Environmental Engineers & Scientists
4000 Hollywood Boulevard, Suite 750N
Hollywood, Florida 33021
Certificate of Authorization Number: 2771

SCALE: AS SHOWN

CONTRACT: 40406
CLIENTS PROJECT:
ENGINEERS PROJECT: 40406
CAD REFERENCE: 40406E15.DWG

CITY OF HALLANDALE BEACH
UTILITIES DEPARTMENT

6 MGD MEMBRANE SOFTENING W.T.P.

EXISTING MCC 1, MCC2 & ELECTRICAL SCHEMATICS

DATE: JANUARY 2008
SHEET: 125 OF 162
DRAWING: E-15

9/28/2001/3:46 P.M. - 42 HLWD - H:\40406\FIG\TECHNEAD\40406FIG4-2.dwg - XREFS: - PS 1=1

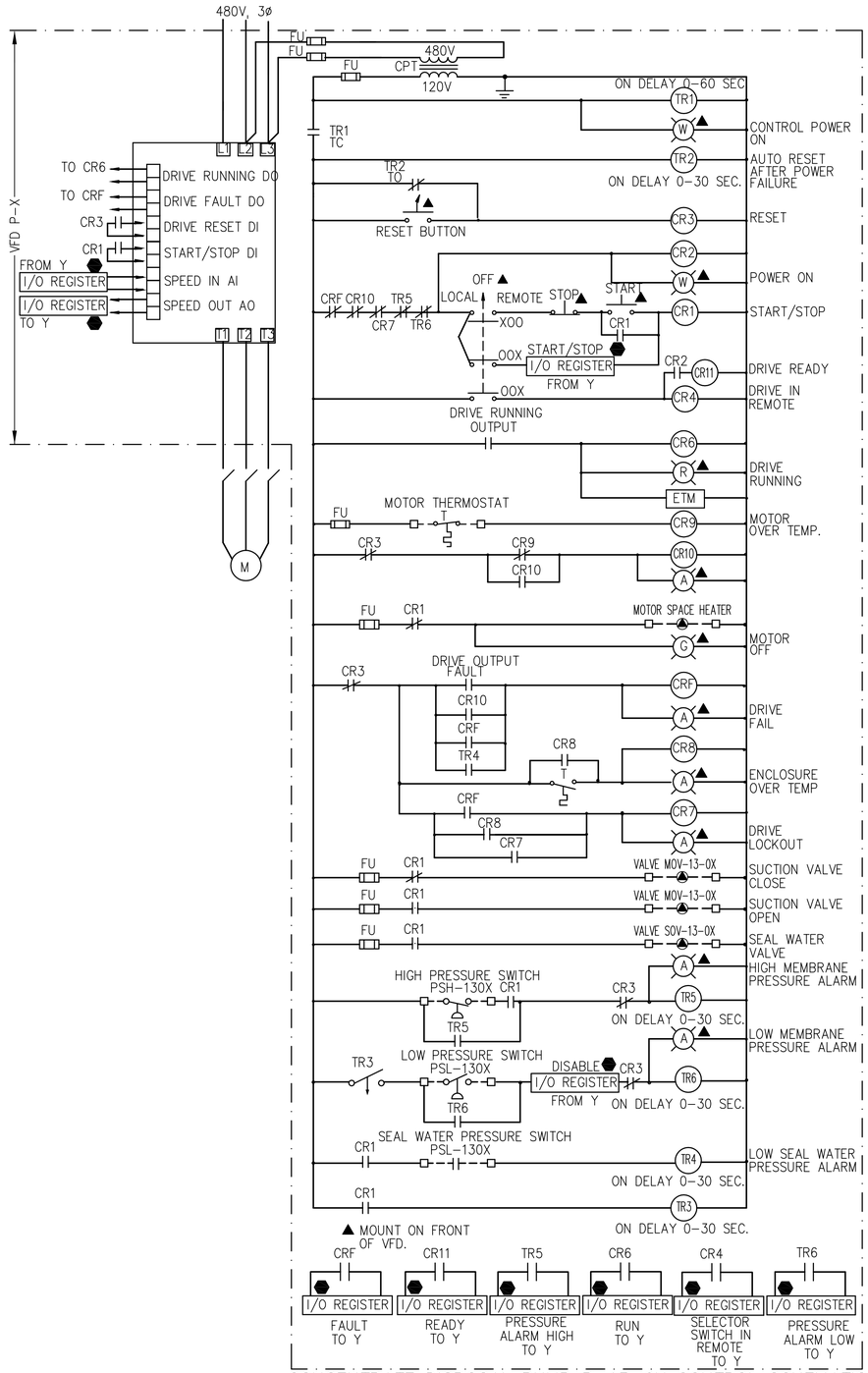

CONCENTRATE DISPOSAL PUMP P-13-0X CONTROL SCHEMATIC

X,Y=3,PLC 2 5 (FUTURE),PLC 2
4,PLC 2 NOT TO SCALE

⬢ REGISTER IS IN VFD FOR DEVICENET COMMUNICATION TO PLANT PLC SYSTEM. COORDINATE WITH DIVISION 17.

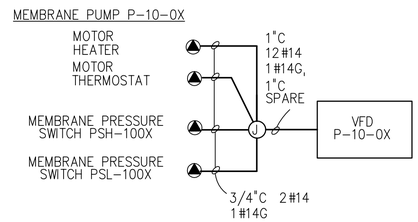

MEMBRANE FEED PUMP P-10-0X RISER DIAGRAM

X=1,2,3 (FUTURE)
NOTE: PROVIDE CONDUITS ONLY FOR FUTURE MEMBRANE PUMP P-1003.
NOT TO SCALE

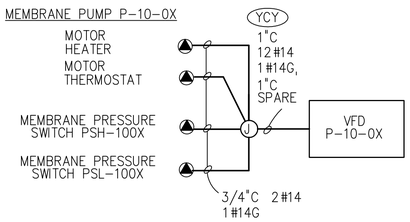

RO FEED PUMP P-10-0X RISER DIAGRAM

X,Y=4 (FUTURE),09
5 (FUTURE),12
NOTE: PROVIDE CONDUITS ONLY FOR FUTURE MEMBRANE PUMPS P-1004 AND P-1005
NOT TO SCALE

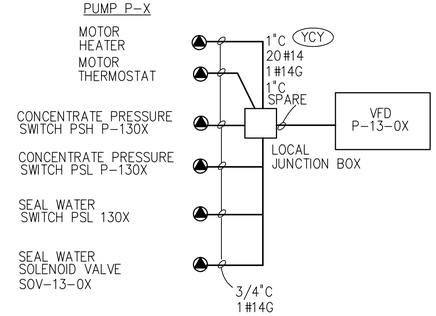

CONCENTRATE DISPOSAL PUMP P-13-0X RISER DIAGRAM

X,Y=3,37
4,39
5,41(FUTURE)
NOT TO SCALE
NOTE: INSTALL CONDUITS ONLY FOR FUTURE PUMP.

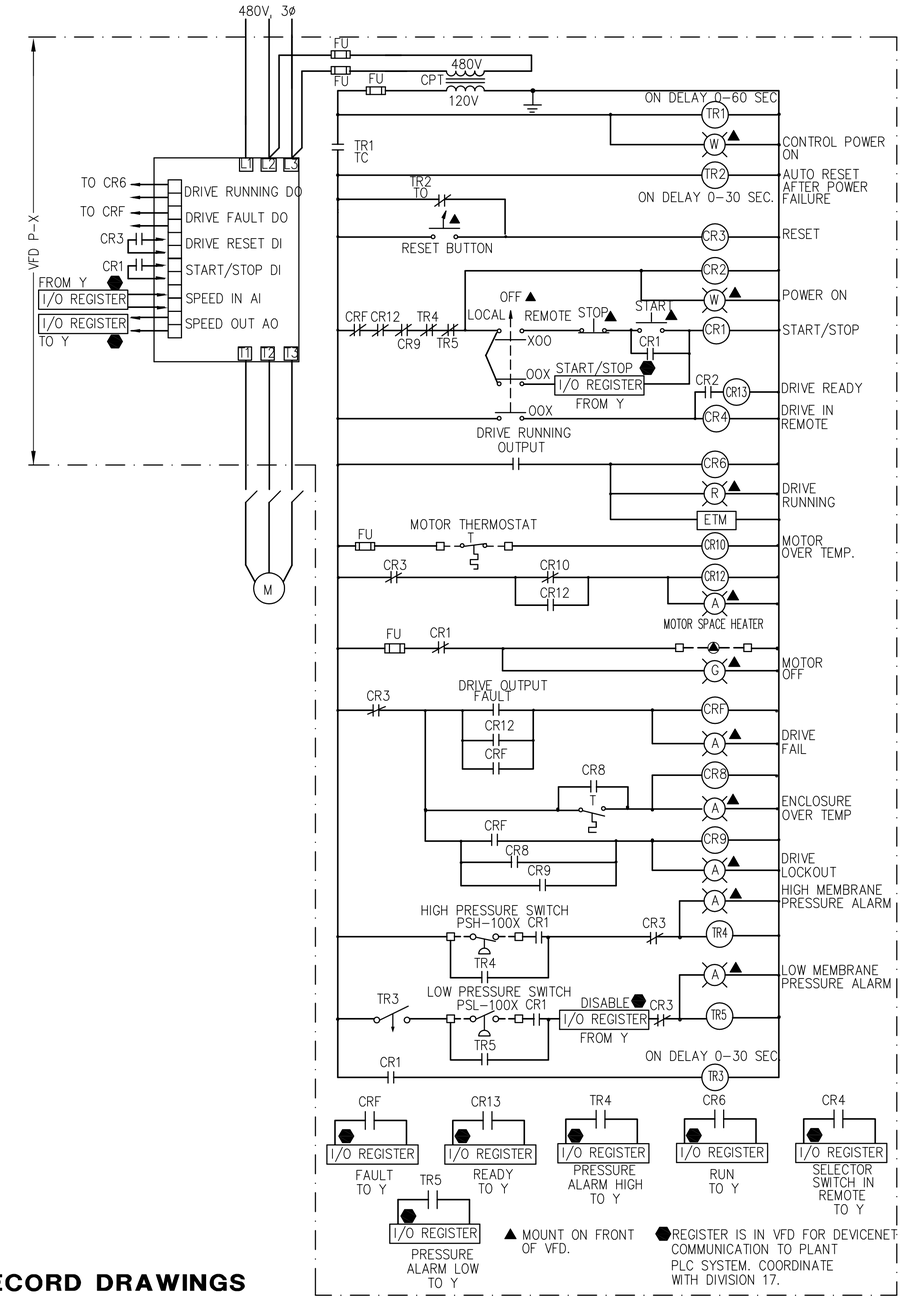

MEMBRANE/RO FEED PUMP P-10-0X CONTROL SCHEMATIC

X,Y=1,PLC1 3 (FUTURE), PLC1
2,PLC1 4 (FUTURE), PLC1
5 (FUTURE), PLC1

RECORD DRAWINGS

REVISIONS DRAWN BY: E. SMITH DATE: DEC. 2007

THESE RECORD DRAWINGS HAVE BEEN PREPARED, IN PART, ON THE BASIS OF INFORMATION COMPILED BY OTHERS, AND MAY NOT REPRESENT THE EXACT LOCAION, TYPE OF COMPONENT, NOR MANNER OF CONSTRUCTION. THE ENGINEER, OR THE ENGINEER'S REPRESENTATIVE, HAS MADE PERIODIC VISITS TO THE SITE TO OBSERVE THE PROGRESS OF THE EXECUTED WORK, AND HEREBY CERTIFIES, BASED UPON THE KNOWLEDGE DERIVED THERE-FROM AND IN ACCORDANCE WITH THE DEPARTMENT OF PROFESSIONAL REGULATION RULE 21-1-1B.011.(4) THAT THESE RECORD DRAWINGS ACCURATELY REFLECT THE WORK PERFORMED.

NO.	DATE	ISSUED FOR	BY
2	01/08	RECORD DRAWINGS	ES
1	10/03	BID SET	ML

DESIGNED M.E.L.
DRAWN M.E.L.
CHECKED P.F.H.
PROJ. ENGR. P.A.D.

HILLERS ELECTRICAL ENGINEERING, INC.
23257 STATE ROAD 7, SUITE 100
BOCA RATON, FLORIDA 33428
(561) 451-9165
(561) 451-4886 FAX
LICENSE NO: EB 0006877
MARK E. LUTHER P.E.
No. 48801

HAZEN AND SAWYER
Environmental Engineers & Scientists
4000 Hollywood Boulevard, Suite 750N
Hollywood, Florida 33021
Certificate of Authorization Number: 2771

SCALE: NONE

CONTRACT: 40406
CLIENTS PROJECT:
ENGINEERS PROJECT: 40406
CAD REFERENCE: 40406E16.DWG

CITY OF HALLANDALE BEACH
UTILITIES DEPARTMENT

6 MGD MEMBRANE SOFTENING W.T.P.

ELECTRICAL SCHEMATICS

SHEET 1

DATE: JANUARY 2008
SHEET: 126 OF 162
DRAWING: E-16

9/28/2001/3:46 P.M. - 42 HLWD - H:\40406\FIG\TECHNEMO4\40406FIG4-2.dwg - XREFS: - PS 1=1

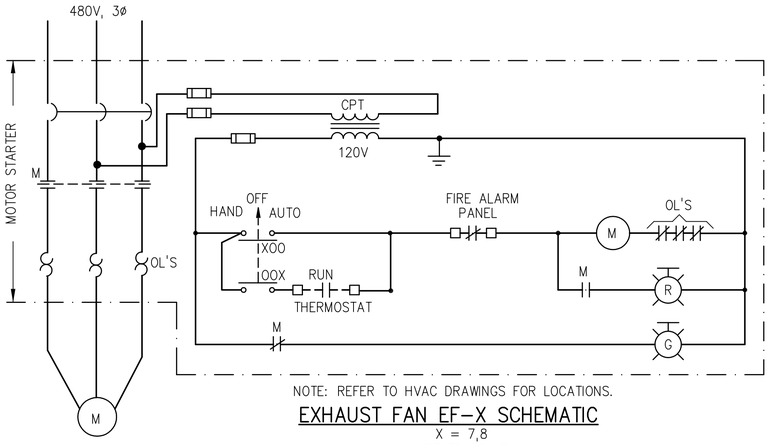

NOTE: REFER TO HVAC DRAWINGS FOR LOCATIONS.

EXHAUST FAN EF-X SCHEMATIC

X = 7,8
NOT TO SCALE

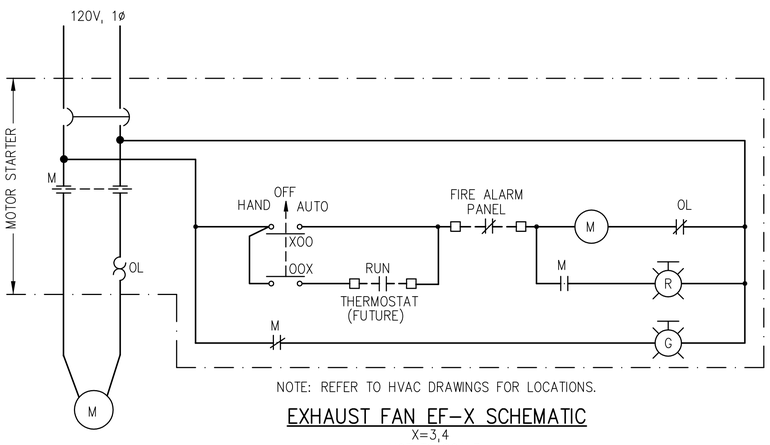

NOTE: REFER TO HVAC DRAWINGS FOR LOCATIONS.

EXHAUST FAN EF-X SCHEMATIC

X=3,4
NOT TO SCALE

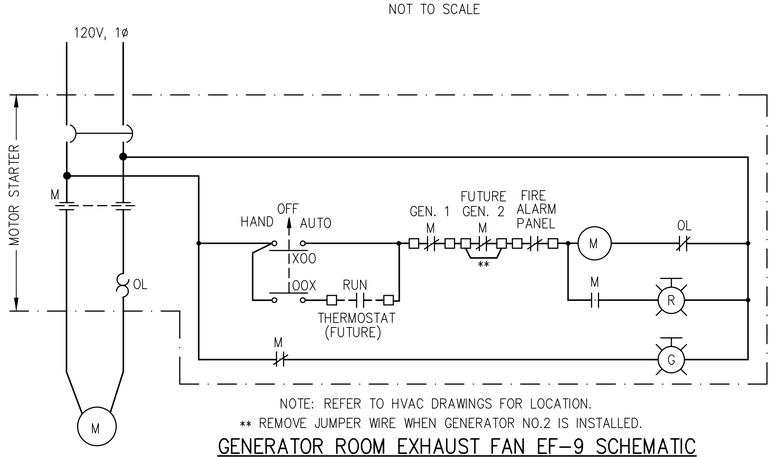

NOTE: REFER TO HVAC DRAWINGS FOR LOCATION.
** REMOVE JUMPER WIRE WHEN GENERATOR NO.2 IS INSTALLED.

GENERATOR ROOM EXHAUST FAN EF-9 SCHEMATIC

NOT TO SCALE

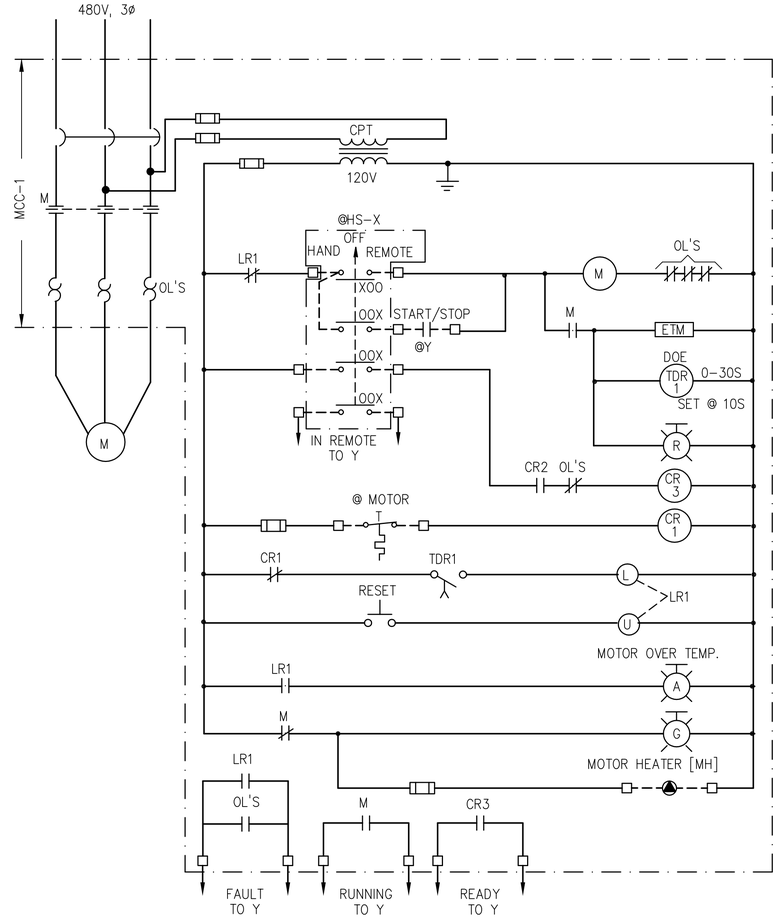

DEGASSIFIER BLOWER DGF-X

X,Y=1120, PLC 2
1121, PLC 2
1122 (FUTURE), PLC 2
NOT TO SCALE

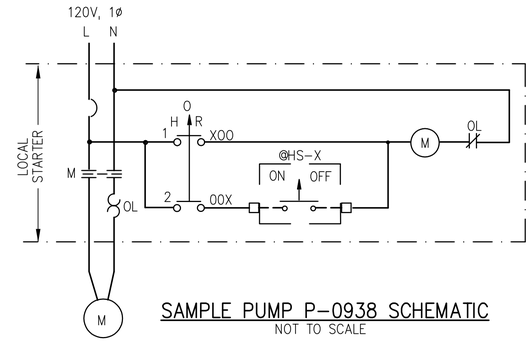

SAMPLE PUMP P-0938 SCHEMATIC

NOT TO SCALE

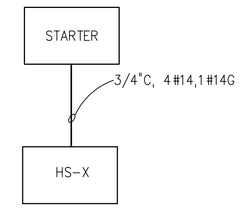

SAMPLE PUMP P-0938 RISER

NOT TO SCALE

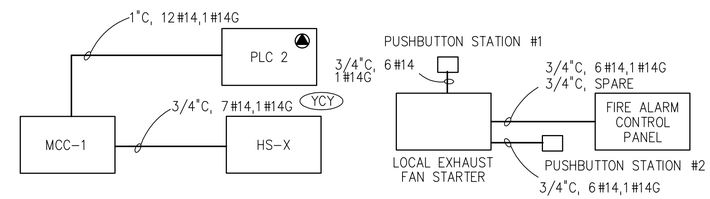

DEGASSIFIER BLOWER DGF-X RISER DIAGRAM

NOT TO SCALE
X,Y=11-20,23
X,Y=11-21,25
X,Y=11-22 (FUTURE),27
FOR FUTURE BLOWER DGF-1122, INSTALL CONDUIT ONLY.

CHEMICAL ROOM EXHAUST FAN EF-X RISER

X=5,6
NOT TO SCALE

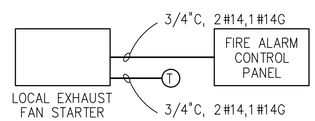

EXHAUST FAN EF-X RISER

X = 3,4,7,8

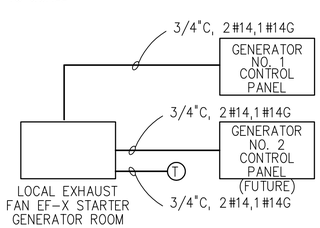

GENERATOR ROOM EXHAUST FAN EF-9 RISER

NOT TO SCALE

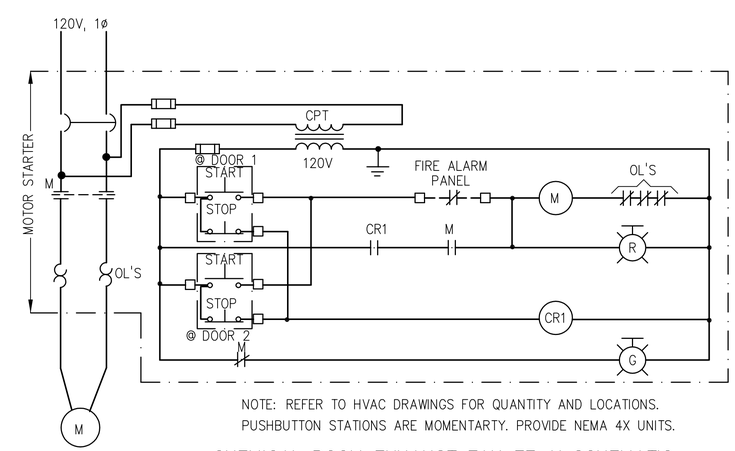

NOTE: REFER TO HVAC DRAWINGS FOR QUANTITY AND LOCATIONS.
PUSHBUTTON STATIONS ARE MOMENTARTY. PROVIDE NEMA 4X UNITS.

CHEMICAL ROOM EXHAUST FAN EF-X SCHEMATIC

X=5,6
NOT TO SCALE

RECORD DRAWINGS

REVISIONS DRAWN BY: E. SMITH DATE: DEC. 2007

THESE RECORD DRAWINGS HAVE BEEN PREPARED, IN PART, ON THE BASIS OF INFORMATION COMPILED BY OTHERS, AND MAY NOT REPRESENT THE EXACT LOCAION, TYPE OF COMPONENT, NOR MANNER OF CONSTRUCTION. THE ENGINEER, OR THE ENGINEER'S REPRESENTATIVE, HAS MADE PERIODIC VISITS TO THE SITE TO OBSERVE THE PROGRESS OF THE EXECUTED WORK. AND HEREBY CERTIFIES, BASED UPON THE KNOWLEDGE DERIVED THERE-FROM AND IN ACCORDANCE WITH THE DEPARTMENT OF PROFESSIONAL REGULATION RULE 21-1-1B.011.(4) THAT THESE RECORD DRAWINGS ACCURATELY REFLECT THE WORK PERFORMED.

NOTE:

1. ALL LOCAL HAND-OFF-AUTO (REMOTE) SWITCHES AND PUSHBUTTON STATIONS FOR MOTOR CONTROL SHALL BE NEMA 4X, LOCATED NEXT TO EQUIPMENT AND FURNISHED, INSTALLED, WIRED AND TESTED BY THE ELECTRICAL CONTRACTOR.

NO.	DATE	ISSUED FOR	BY
2	01/08	RECORD DRAWINGS	ES
1	10/03	BID SET	ML

DESIGNED M.E.L.
DRAWN M.E.L.
CHECKED P.F.H.
PROJ. ENGR. P.A.D.

HILLERS ELECTRICAL ENGINEERING, INC.
23257 STATE ROAD 7, SUITE 100
BOCA RATON, FLORIDA 33428
(561) 451-9165
(561) 451-4886 FAX
LICENSE NO: EB 0006877
MARK E. LUTHER P.E.
No. 48801

HAZEN AND SAWYER
Environmental Engineers & Scientists
4000 Hollywood Boulevard, Suite 750N
Hollywood, Florida 33021
Certificate of Authorization Number: 2771

SCALE: AS SHOWN

CONTRACT: 40406
CLIENTS PROJECT:
ENGINEERS PROJECT: 40406
CAD REFERENCE: 40406E17.DWG

CITY OF HALLANDALE BEACH
UTILITIES DEPARTMENT

6 MGD MEMBRANE SOFTENING W.T.P.

ELECTRICAL SCHEMATICS

SHEET 2

DATE: JANUARY 2008
SHEET: 127 OF 162
DRAWING: E-17

9/28/2007 3:46 P.M. - 42 PLWD - H:\40406\FIG\TECHMEMO4\40406FIG4-2.dwg - XREFS: - PS 1=1

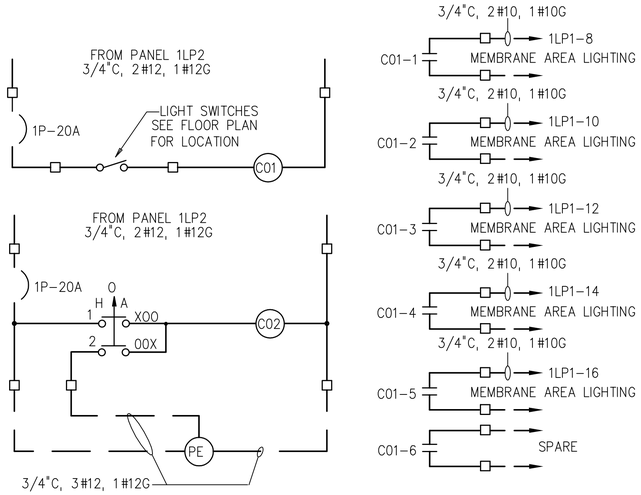

CONTRACTOR SHALL PROVIDE AND INSTALL ELECTRICALLY HELD LIGHTING CONTACTOR, 120V, 1P COIL, 30A 277V RATED CONTACTS IN NEMA 4X SS ENCLOSURE. MAKE ALL NECESSARY CONNECTIONS FOR A COMPLETE WORKING SYSTEM IN PLACE.

LIGHTING CONTROL SCHEMATIC

SCALE: NONE

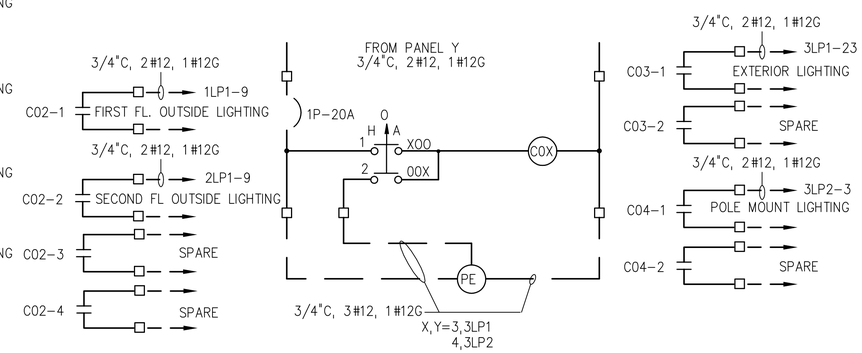

CONTRACTOR SHALL PROVIDE AND INSTALL ELECTRICALLY HELD LIGHTING CONTACTOR, 120V, 1P COIL, 30A 277V RATED CONTACTS IN NEMA 4X ENCLOSURE. MAKE ALL NECESSARY CONNECTIONS FOR A COMPLETE WORKING SYSTEM IN PLACE.

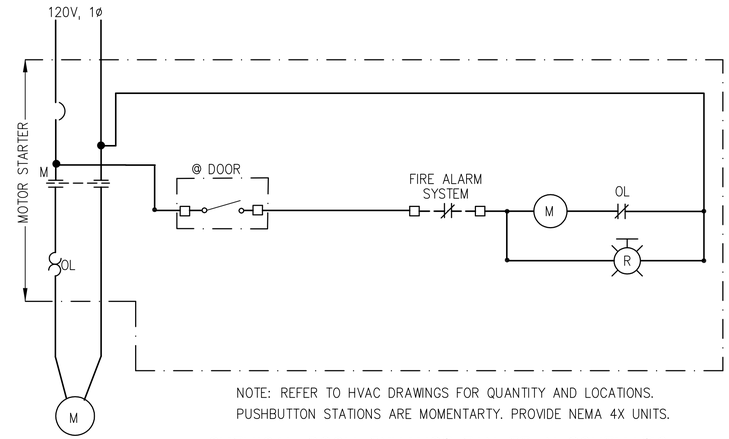

NOTE: REFER TO HVAC DRAWINGS FOR QUANTITY AND LOCATIONS.
PUSHBUTTON STATIONS ARE MOMENTARTY. PROVIDE NEMA 4X UNITS.

CHEMICAL ROOM EXHAUST FAN EF-X SCHEMATIC

X=10,11
NOT TO SCALE

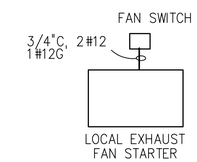

CHEMICAL ROOM EXHAUST FAN EF-X RISER

X=10,11
NOT TO SCALE

RECORD DRAWINGS

REVISIONS DRAWN BY: E. SMITH DATE: DEC. 2007

THESE RECORD DRAWINGS HAVE BEEN PREPARED, IN PART, ON THE BASIS OF INFORMATION COMPILED BY OTHERS, AND MAY NOT REPRESENT THE EXACT LOCAION, TYPE OF COMPONENT, NOR MANNER OF CONSTRUCTION. THE ENGINEER, OR THE ENGINEER'S REPRESENTATIVE, HAS MADE PERIODIC VISITS TO THE SITE TO OBSERVE THE PROGRESS OF THE EXECUTED WORK. AND HEREBY CERTIFIES, BASED UPON THE KNOWLEDGE DERIVED THERE-FROM AND IN ACCORDANCE WITH THE DEPARTMENT OF PROFESSIONAL REGULATION RULE 21-1-1B.011.(4) THAT THESE RECORD DRAWINGS ACCURATELY REFLECT THE WORK PERFORMED.

NO.	DATE	ISSUED FOR	BY
3	01/08	RECORD DRAWINGS	ES
2	11/05	ADD EXHAUST FANS	SFC
1	10/03	BID SET	ML

DESIGNED M.E.L.
DRAWN M.E.L.
CHECKED P.F.H.
PROJ. ENGR. P.A.D.

HILLERS ELECTRICAL ENGINEERING, INC.
23257 STATE ROAD 7, SUITE 100
BOCA RATON, FLORIDA 33428
(561) 451-9165
(561) 451-4886 FAX
LICENSE NO: EB 0006877
MARK E. LUTHER P.E.
No. 48801

HAZEN AND SAWYER
Environmental Engineers & Scientists
4000 Hollywood Boulevard, Suite 750N
Hollywood, Florida 33021
Certificate of Authorization Number: 2771

SCALE: AS SHOWN

CONTRACT: 40406
CLIENTS PROJECT:
ENGINEERS PROJECT: 40406
CAD REFERENCE: 40406E18.DWG

CITY OF HALLANDALE BEACH
UTILITIES DEPARTMENT

6 MGD MEMBRANE SOFTENING W.T.P.

ELECTRICAL SCHEMATICS

SHEET 3

DATE: JANUARY 2008
SHEET: 128 OF 162
DRAWING: E-18

9/28/2001 3:46 P.M. - 42 HLWD - H:\40406\FIG\TECHWEB04\40406FIG4-2.dwg - XREFS: - PS 1=1

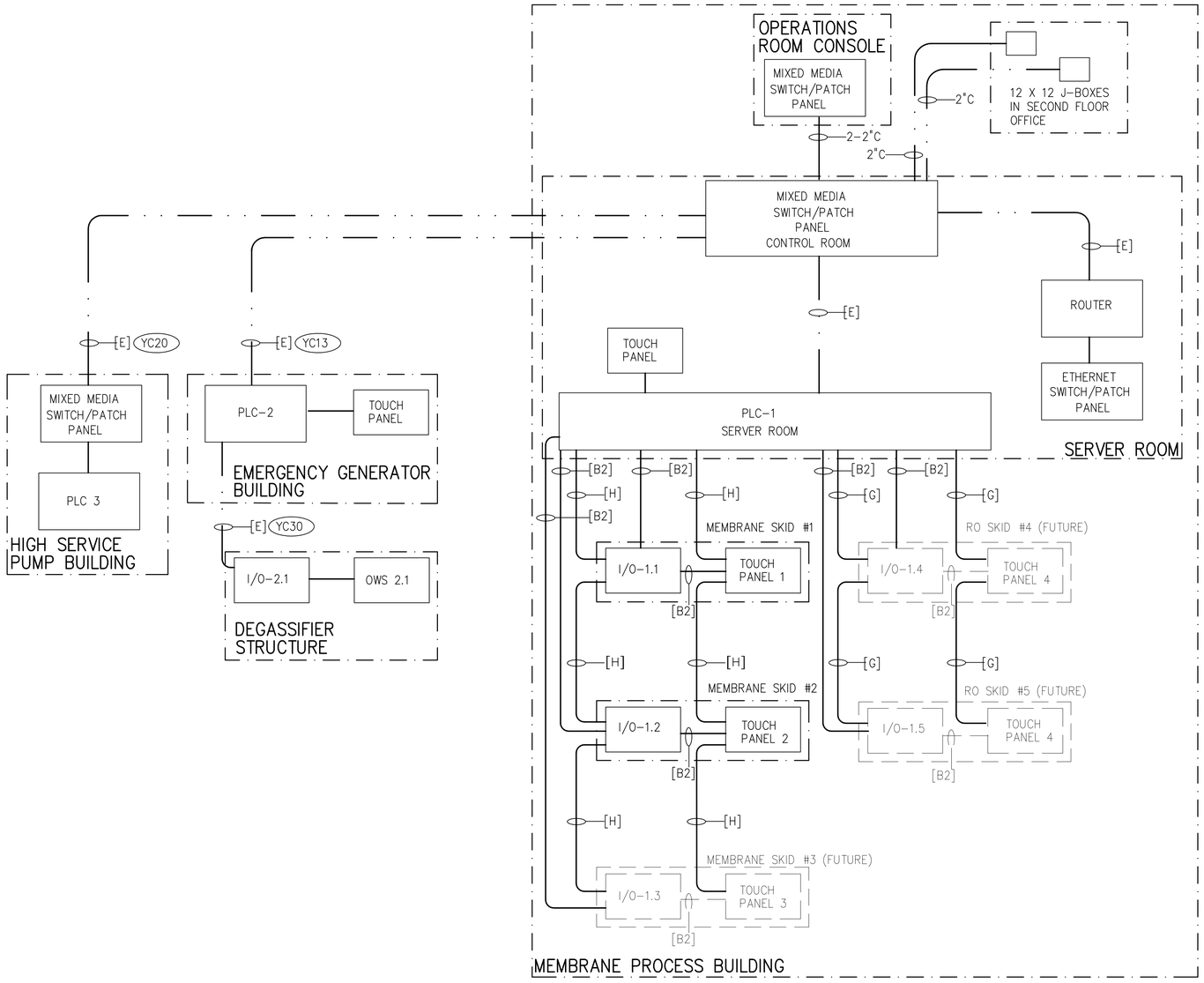

FIBER OPTIC COMMUNICATIONS RISER DIAGRAM

NOT TO SCALE

NOTE

BEFORE INSTALLATION, THE CONTRACTOR SHALL COORDINATE ALL CONDUIT REQUIREMENTS WITH INSTRUMENTATION SUPPLIER DIVISION 17.

CIRCUIT LEGEND

[E] = [2"C FOR FIBER OPTIC CABLE] COORDINATE MINIMUM BENDING RADIUS WITH MANUFACTURER. FIBER OPTIC CABLE FURNISHED UNDER DIVISION 17000 INSTALLED BY ELECTRICAL CONTRACTOR AND TESTED BY I&C CONTRACTOR. ELECTRICAL CONTRACTOR TO PROVIDE LENGTHS TO I&C CONTRACTOR.

[F] = [2"C, EMPTY] CABLE TO BE PROVIDED AND INSTALLED BY CITY.

[G] = [2"C FOR FIBER FUTURE TWIN AXIAL CABLE] USE SAME MINIMUM BENDING RADIUS AS WITH TWIN AXIAL CABLE/CONDUIT SYSTEM INSTALLED UNDER THIS CONTRACT.

[H] = [2"C FOR TWIN AXIAL CABLE] COORDINATE MINIMUM BENDING RADIUS WITH MANUFACTURER. TWIN AXIAL CABLE FURNISHED UNDER DIVISION 17000 INSTALLED BY ELECTRICAL CONTRACTOR AND TESTED BY I&C CONTRACTOR. ELECTRICAL CONTRACTOR TO PROVIDE LENGTHS TO I&C CONTRACTOR.

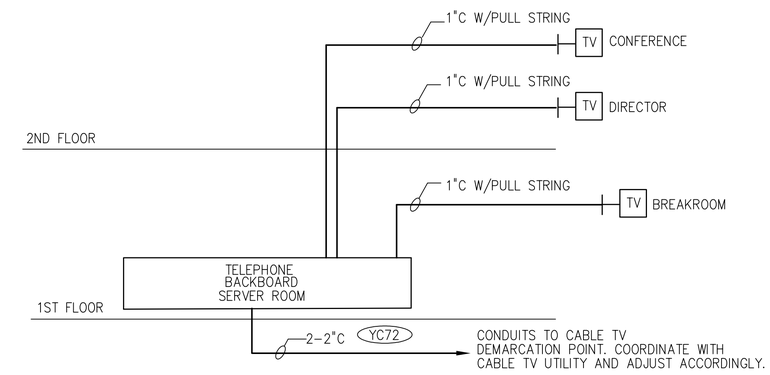

NOTE: COORDINATE FINAL OUTLET LOCATIONS AND MOUNTING HEIGHT WITH OWNER.

CABLE TV RACEWAY SYSTEM RISER

NOT TO SCALE

RECORD DRAWINGS

REVISIONS DRAWN BY: E. SMITH DATE: DEC. 2007

THESE RECORD DRAWINGS HAVE BEEN PREPARED, IN PART, ON THE BASIS OF INFORMATION COMPILED BY OTHERS, AND MAY NOT REPRESENT THE EXACT LOCAION, TYPE OF COMPONENT, NOR MANNER OF CONSTRUCTION. THE ENGINEER, OR THE ENGINEER'S REPRESENTATIVE, HAS MADE PERIODIC VISITS TO THE SITE TO OBSERVE THE PROGRESS OF THE EXECUTED WORK. AND HEREBY CERTIFIES, BASED UPON THE KNOWLEDGE DERIVED THERE-FROM AND IN ACCORDANCE WITH THE DEPARTMENT OF PROFESSIONAL REGULATION RULE 21-1-1B.011.(4) THAT THESE RECORD DRAWINGS ACCURATELY REFLECT THE WORK PERFORMED.

NO.	DATE	ISSUED FOR	BY
2	01/08	RECORD DRAWINGS	ES
1	05/04	BID SET	ML

DESIGNED M.E.L.
DRAWN M.E.L.
CHECKED P.F.H.
PROJ. ENGR. P.A.D.

HILLERS ELECTRICAL ENGINEERING, INC.
23257 STATE ROAD 7, SUITE 100
BOCA RATON, FLORIDA 33428
(561) 451-9165
(561) 451-4886 FAX
LICENSE NO: EB 0006877
MARK E. LUTHER P.E.
No. 48801

HAZEN AND SAWYER
Environmental Engineers & Scientists
4000 Hollywood Boulevard, Suite 750N
Hollywood, Florida 33021
Certificate of Authorization Number: 2771

SCALE: NONE

CONTRACT: 40406
CLIENTS PROJECT:
ENGINEERS PROJECT: 40406
CAD REFERENCE: 40406E19.DWG

CITY OF HALLANDALE BEACH
City of Choice
CITY OF HALLANDALE BEACH
UTILITIES DEPARTMENT

6 MGD MEMBRANE SOFTENING W.T.P.

INSTRUMENTATION AND CONTROL

RISER DIAGRAMS – SHEET 1

DATE: JANUARY 2008
SHEET: 129 OF 162
DRAWING: E-19

9/28/2001 3:46 P.M. - 42 HLWD - H:\40406\FIG\TECHMEMOA\40406FIG4-2.dwg - XREFS: - PS 1=1

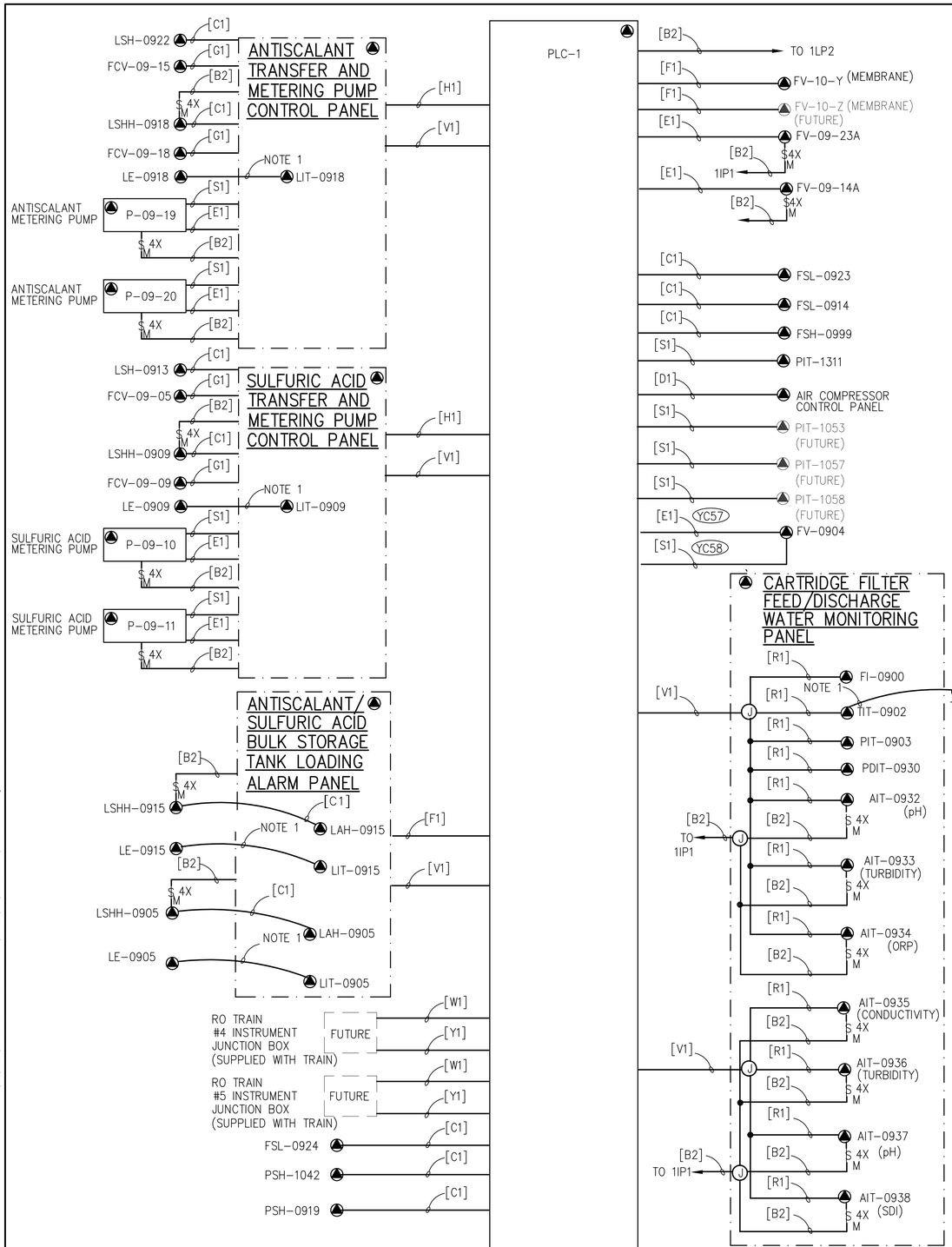

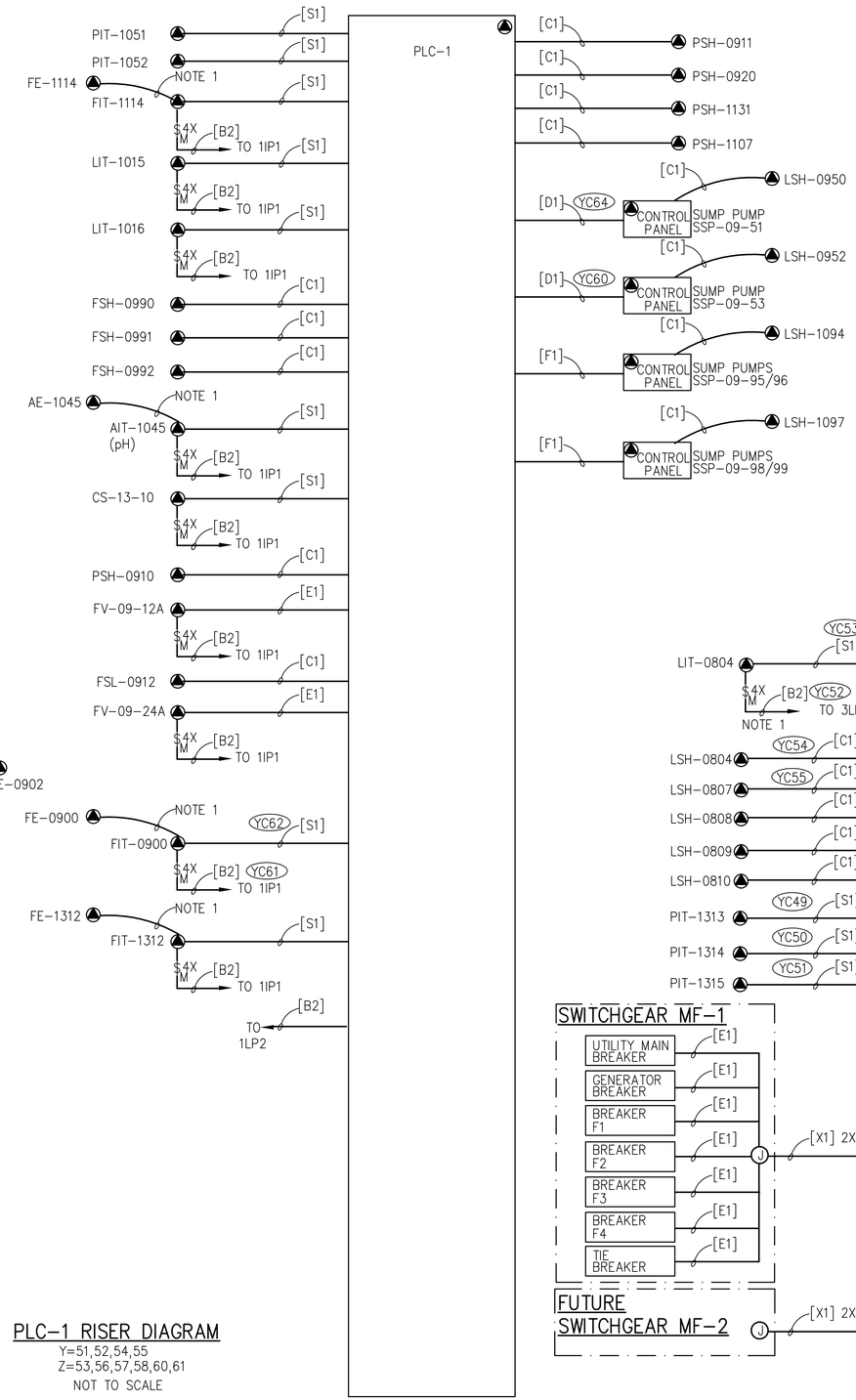

NOTES:

1. CABLE FURNISHED BY EQUIPMENT SUPPLIER. PROVIDE AND INSTALL 3/4"C. VERIFY CONDUIT SIZE WITH EQUIPMENT SUPPLIER.
2. NOT ALL CONDUITS AND CABLES SHOWN. SEE OTHER PLAN DRAWINGS FOR ADDITIONAL CONDUITS AND CABLES.
3. CONTRACTOR IS ALLOWED TO COMBINE CONTROL AND INSTRUMENTATION WIRE AS LONG AS WORK IS ACCOMPLISHED IN ACCORDANCE WITH THE NEC.

CIRCUIT LEGEND

[A1] = [3/4"C, 2#14, 1#14G]
[A3] = [3/4"C, 3#12, 1#12G]
[B2] = [3/4"C, 2#12, 1#12G]
[B3] = [3/4"C, 3#10, 1#10G]
[C1] = [3/4"C, 4#14, 1#14G]
[C2] = [3/4"C, 2#10, 1#10G]
[D1] = [3/4"C, 8#14, 1#14G]
[E1] = [3/4"C, 6#14, 1#14G]
[F1] = [1"C, 12#14, 1#14G]
[G1] = [3/4"C, 11#14, 1#14G]
[H1] = [2"C, 50#14, 1#14G]
[R1] = [3/4"C, 1-TYPE B, TW SHLD PR]
[S1] = [3/4"C, 2-TYPE B, TW SHLD PR]
[U1] = [1 1/4"C, 4-TYPE B, TW SHLD PR]
[V1] = [1 1/2"C, 8-TYPE B, TW SHLD PR]
[W1] = [1 1/4"C, 22#14, 1#14G]
[X1] = [1 1/4"C, 25#14, 1#14G]
[Y1] = [2"C, 14-TYPE B, TW SHLD PR]
[Z1] = [4"C, 20-TYPE B, TW SHLD PR]
[A] = [1"C, BELDEN 8465]
[B] = [1"C, BELDEN 9681]

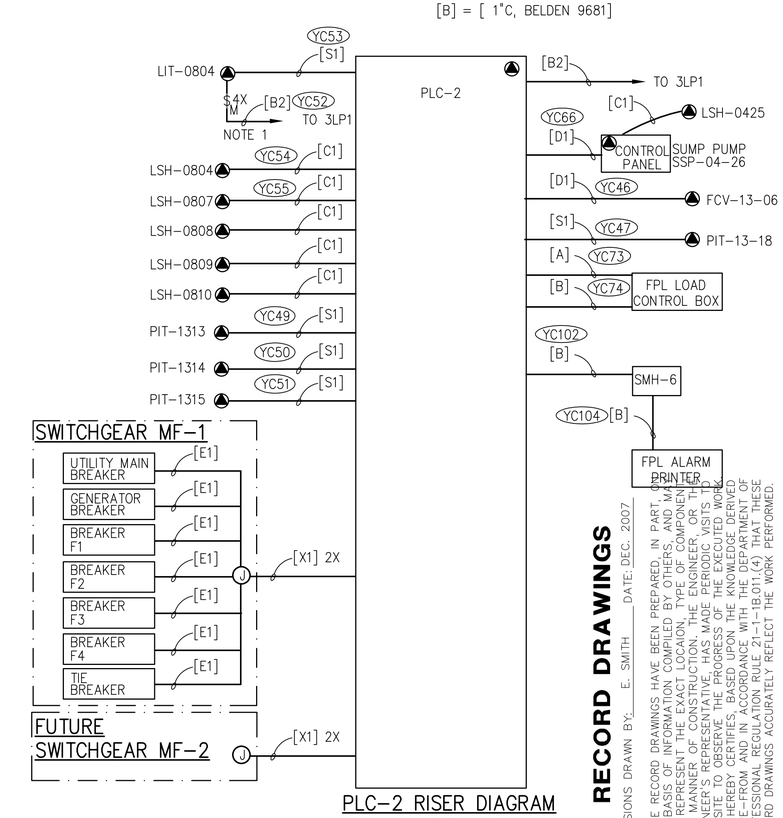

PLC-1 RISER DIAGRAM
Y=51,52,54,55
Z=53,56,57,58,60,61
NOT TO SCALE

PLC-2 RISER DIAGRAM
NOT TO SCALE

RECORD DRAWINGS

REVISIONS DRAWN BY: E. SMITH DATE: DEC. 2007

THESE RECORD DRAWINGS HAVE BEEN PREPARED, IN PART, UPON THE BASIS OF INFORMATION COMPILED BY OTHERS, AND MAY NOT REPRESENT THE EXACT LOCATION, TYPE OR COMPONENTS NOR MANNER OF CONSTRUCTION. THE ENGINEER OF RECORD, OR ENGINEER'S REPRESENTATIVE, HAS MADE PERIODIC VISITS TO THE SITE TO OBSERVE THE PROGRESS OF THE EXECUTED WORK AND HEREBY CERTIFIES, BASED UPON THE KNOWLEDGE DERIVED THERE-FROM AND IN ACCORDANCE WITH THE DEPARTMENT OF PROFESSIONAL REGULATION RULE 21-1-1B.011.(4) THAT THESE RECORD DRAWINGS ACCURATELY REFLECT THE WORK PERFORMED.

NO.	DATE	ISSUED FOR	BY
2	01/08	RECORD DRAWINGS	ES
1	10/03	BID SET	ML

DESIGNED M.E.L.
DRAWN M.E.L.
CHECKED P.F.H.
PROJ. ENGR. P.A.D.

HILLERS ELECTRICAL ENGINEERING, INC.
23257 STATE ROAD 7, SUITE 100
BOCA RATON, FLORIDA 33428
(561) 451-9165
(561) 451-4886 FAX
LICENSE NO: EB 0006877
MARK E. LUTHER P.E.
No. 48801

HAZEN AND SAWYER
Environmental Engineers & Scientists
4000 Hollywood Boulevard, Suite 750N
Hollywood, Florida 33021
Certificate of Authorization Number: 2771

SCALE: NONE

CONTRACT: 40406
CLIENTS PROJECT:
ENGINEERS PROJECT: 40406
CAD REFERENCE: 40406E20.DWG

CITY OF HALLANDALE BEACH
UTILITIES DEPARTMENT

6 MGD MEMBRANE SOFTENING W.T.P.

INSTRUMENTATION AND CONTROL
RISER DIAGRAMS – SHEET 2

DATE: JANUARY 2008
SHEET: 130 OF 162
DRAWING: E-20

9/28/2001/3:46 P.M. - 42 HLWD - H:\40406\FIG\TECHMEMO4\40406FIG4-2.dwg - XREFS: - PS 1=1

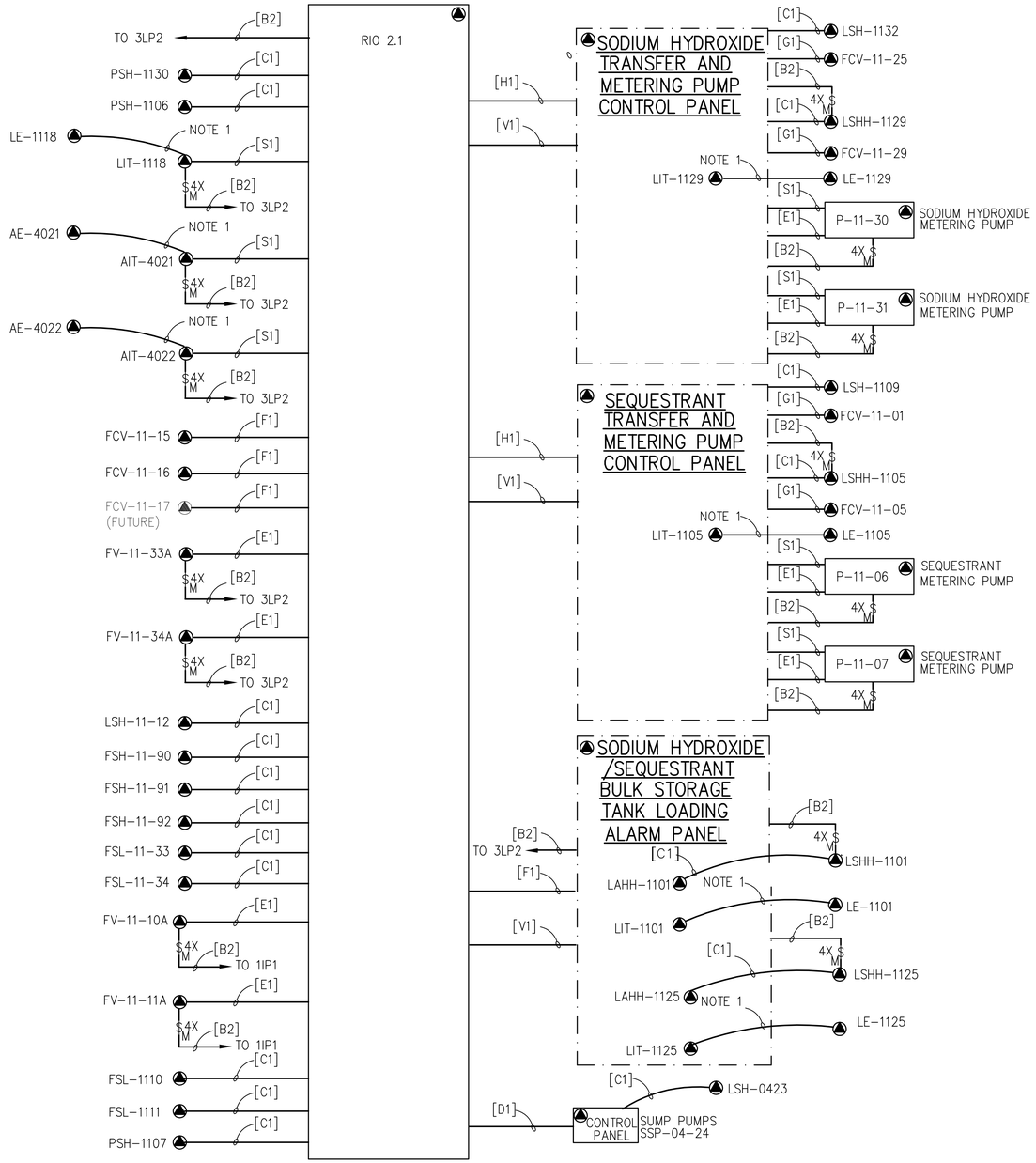

RIO-2.1 RISER DIAGRAM

NOT TO SCALE

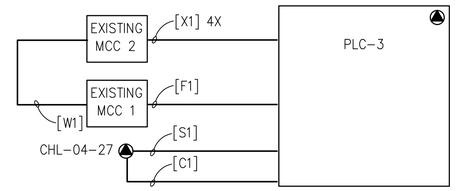

PLC 3 RISER DIAGRAM

NOT TO SCALE

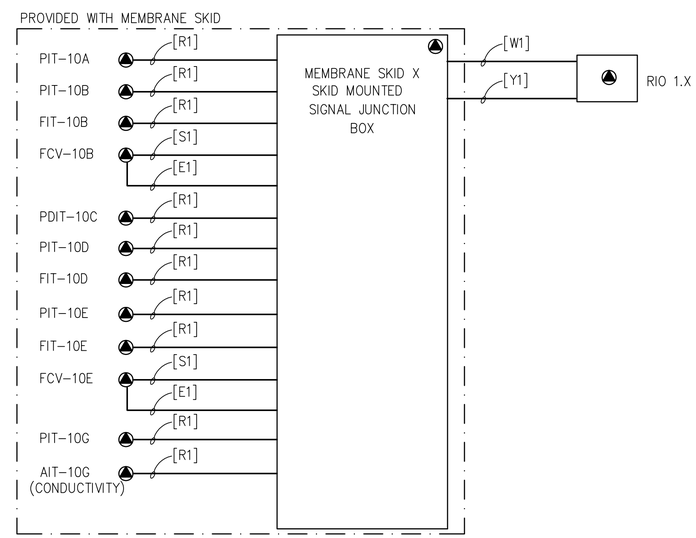

NOTES:
1. INSTRUMENTS AND JUNCTION BOX ARE PROVIDED AS PART OF THE SKID PACKAGE AND ARE SHOWN HERE FOR CONTRACTOR REFERENCE.

MEMBRANE TRAIN X SKID MOUNTED SIGNAL JUNCTION BOX RISER DIAGRAM

NOT TO SCALE

X	A	B	C	D	E	G
1	61	65	71	75	81	91
2	62	66	72	76	82	92
3 (FUTURE)	63 (FUTURE)	67 (FUTURE)	73 (FUTURE)	77 (FUTURE)	83 (FUTURE)	93 (FUTURE)

NOTES:

1. CABLE FURNISHED BY EQUIPMENT SUPPLIER. PROVIDE AND INSTALL 3/4"C. VERIFY CONDUIT SIZE WITH EQUIPMENT SUPPLIER.
2. NOT ALL CONDUITS AND CABLES SHOWN. SEE OTHER PLAN DRAWINGS FOR ADITIONAL CONDUITS AND CABLES.
3. CONTRACTOR IS ALLOWED TO COMBINE CONTROL AND INSTRUMENTATION WIRE AS LONG AS WORK IS ACCOMPLISHED IN ACCORDANCE WITH THE NEC.

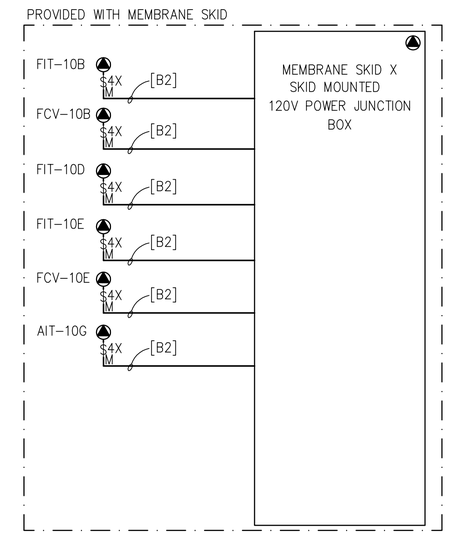

NOTES:
1. INSTRUMENTS AND JUNCTION BOX ARE PROVIDED AS PART OF THE SKID PACKAGE AND ARE SHOWN HERE FOR CONTRACTOR REFERENCE.

MEMBRANE TRAIN X SKID MOUNTED 120V POWER JUNCTION BOX RISER DIAGRAM

NOT TO SCALE

X	B	D	E	G
1	65	75	81	91
2	66	76	82	92
3 (FUTURE)	67 (FUTURE)	77 (FUTURE)	83 (FUTURE)	93 (FUTURE)

CIRCUIT LEGEND

[A1] = [3/4"C, 2#14, 1#14G]
[A3] = [3/4"C, 3#12, 1#12G]
[B2] = [3/4"C, 2#12, 1#12G]
[C2] = [3/4"C, 2#10, 1#10G]
[C1] = [3/4"C, 4#14, 1#14G]
[D1] = [3/4"C, 8#14, 1#14G]
[E1] = [3/4"C, 6#14, 1#14G]
[F1] = [1"C, 12#14, 1#14G]
[G1] = [3/4"C, 11#14, 1#14G]
[R1] = [3/4"C, 1-TYPE B, TW SHLD PR]
[S1] = [3/4"C, 2-TYPE B, TW SHLD PR]
[U1] = [1 1/4"C, 4-TYPE B, TW SHLD PR]
[V1] = [1 1/2"C, 8-TYPE B, TW SHLD PR]
[W1] = [1"C, 18#14, 1#14G]
[X1] = [1"C, 25#14, 1#14G]
[Y1] = [2"C, 14-TYPE B, TW SHLD PR]

RECORD DRAWINGS

REVISIONS DRAWN BY: E. SMITH DATE: DEC. 2007

THESE RECORD DRAWINGS HAVE BEEN PREPARED, IN PART, ON THE BASIS OF INFORMATION COMPILED BY OTHERS, AND MAY NOT REPRESENT THE EXACT LOCAION, TYPE OF COMPONENT, NOR MANNER OF CONSTRUCTION. THE ENGINEER, OR THE ENGINEER'S REPRESENTATIVE, HAS MADE PERIODIC VISITS TO THE SITE TO OBSERVE THE PROGRESS OF THE EXECUTED WORK. AND HEREBY CERTIFIES, BASED UPON THE KNOWLEDGE DERIVED THERE-FROM AND IN ACCORDANCE WITH THE DEPARTMENT OF PROFESSIONAL REGULATION RULE 21-1-1B.011.(4) THAT THESE RECORD DRAWINGS ACCURATELY REFLECT THE WORK PERFORMED.

NO.	DATE	ISSUED FOR	BY
2	01/08	RECORD DRAWINGS	ES
1	10/03	BID SET	ML

DESIGNED M.E.L.
DRAWN M.E.L.
CHECKED P.F.H.
PROJ. ENGR. P.A.D.

HILLERS ELECTRICAL ENGINEERING, INC.
23257 STATE ROAD 7, SUITE 100
BOCA RATON, FLORIDA 33428
(561) 451-9165
(561) 451-4886 FAX
LICENSE NO: EB 0006877
MARK E. LUTHER P.E.
No. 48801

HAZEN AND SAWYER
Environmental Engineers & Scientists
4000 Hollywood Boulevard, Suite 750N
Hollywood, Florida 33021
Certificate of Authorization Number: 2771

SCALE NONE

CONTRACT: 40406
CLIENTS PROJECT:
ENGINEERS PROJECT: 40406
CAD REFERENCE: 40406E21.DWG

CITY OF HALLANDALE BEACH
UTILITIES DEPARTMENT

6 MGD MEMBRANE SOFTENING W.T.P.

INSTRUMENTATION AND CONTROL

RISER DIAGRAMS - SHEET 3

DATE: JANUARY 2008
SHEET: 131 OF 162
DRAWING: E-21

9/28/2001 3:46 P.M. - 42 HLWD - H:\40406\FIG\TECHMEMOA\40406F104-2.dwg - XREFS: - PS 1=1

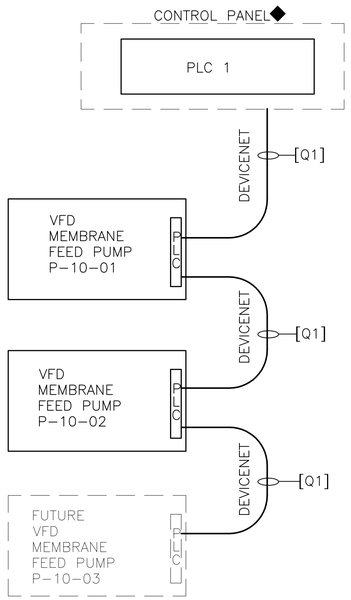

PLC 1
DEVICENET COMMUNICATIONS RISER
NOT TO SCALE

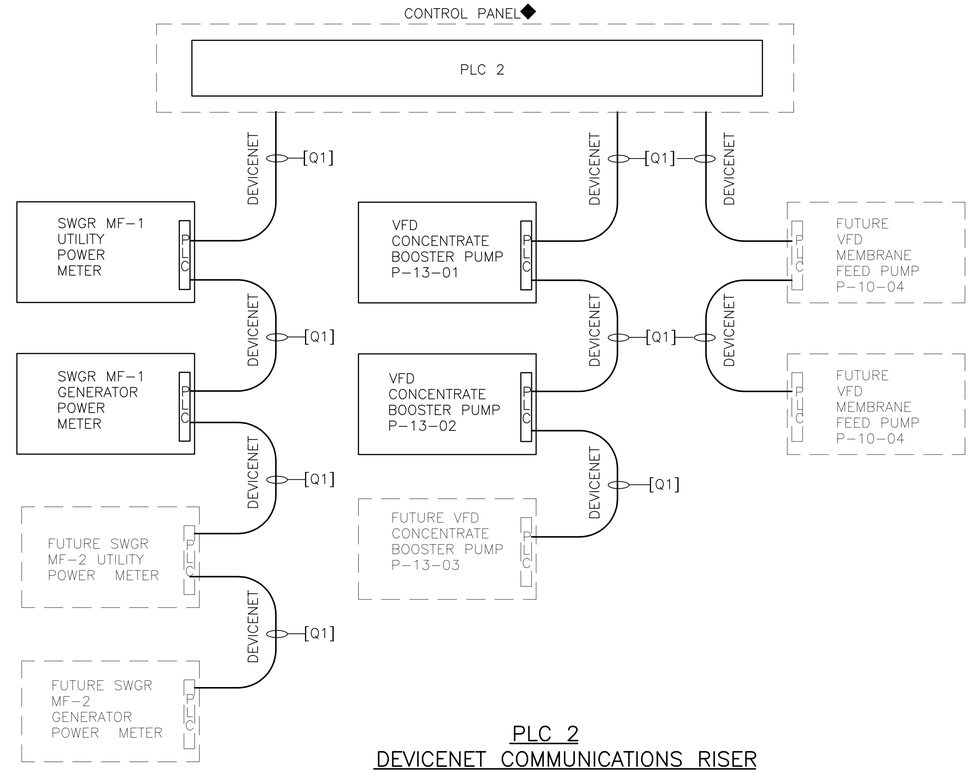

PLC 2
DEVICENET COMMUNICATIONS RISER
NOT TO SCALE

NOTES:

1. CABLE FURNISHED BY EQUIPMENT SUPPLIER. PROVIDE AND INSTALL 3/4"C. VERIFY CONDUIT SIZE WITH EQUIPMENT SUPPLIER.
2. NOT ALL CONDUITS AND CABLES SHOWN. SEE OTHER PLAN DRAWINGS FOR ADDITIONAL CONDUITS AND CABLES.
3. CONTRACTOR IS ALLOWED TO COMBINE CONTROL AND INSTRUMENTATION WIRE AS LONG AS WORK IS ACCOMPLISHED IN ACCORDANCE WITH THE NEC AND VOLTAGE SEPARATION IS MAINTAINED.

CIRCUIT LEGEND

[A1] = [3/4"C, 2#14, 1#14G]
[A3] = [3/4"C, 3#12, 1#12G]
[B2] = [3/4"C, 2#12, 1#12G]
[C2] = [3/4"C, 2#10, 1#10G]
[C1] = [3/4"C, 4#14, 1#14G]
[E1] = [3/4"C, 6#14, 1#14G]
[F1] = [1"C, 12#14, 1#14G]
[G1] = [3/4"C, 11#14, 1#14G]
[W1] = [1"C, 18#14, 1#14G]
[Q1] = [3/4 "C, 1-BELDEN 3085A]
[R1] = [3/4"C, 1-TYPE B, TW SHLD PR]
[S1] = [3/4"C, 2-TYPE B, TW SHLD PR]
[T1] = [4"C, 20-TYPE B, TW SHLD PR]
[U1] = [1 1/4"C, 4-TYPE B, TW SHLD PR]
[V1] = [1 1/2"C, 8-TYPE B, TW SHLD PR]
[W1] = [1"C, 18#14, 1#14G]
[Y1] = [2"C, 14-TYPE B, TW SHLD PR]
[Z1] = [1 1/2"C, 30#14,1#14G]

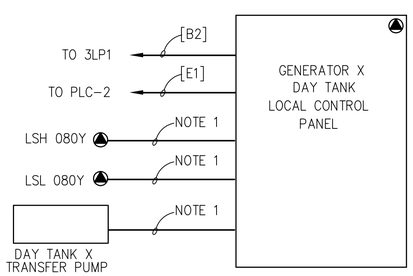

GENERATOR X DAY TANK RISER DIAGRAM
NOT TO SCALE
X,Y=1,5
=2(FUTURE),6(FUTURE)
NOTE: INSTALL CONDUIT FOR ALL FUTURE EQUIPMENT.

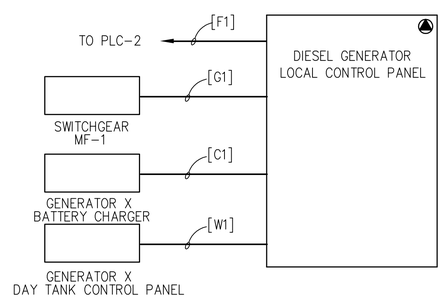

DIESEL GENERATOR X LOCAL CONTROL PANEL RISER DIAGRAM
NOT TO SCALE
X=1,2 (FUTURE)
NOTE: INSTALL CONDUIT FOR ALL FUTURE EQUIPMENT.

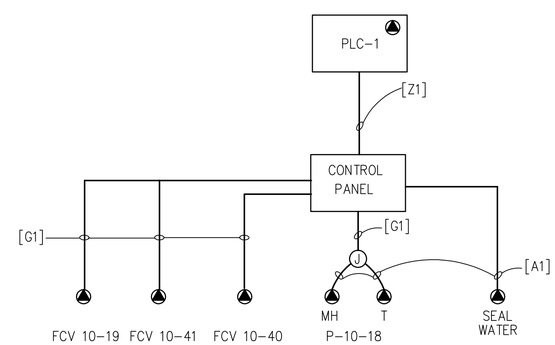

MEMBRANE CLEANING SYSTEM RISER
NOT TO SCALE

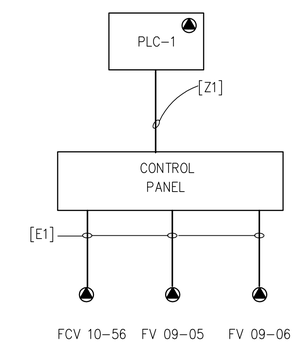

START-UP VALVE CONTROL PANEL RISER
NOT TO SCALE

RECORD DRAWINGS

REVISIONS DRAWN BY: E. SMITH DATE: DEC. 2007

THESE RECORD DRAWINGS HAVE BEEN PREPARED, IN PART, ON THE BASIS OF INFORMATION COMPILED BY OTHERS, AND MAY NOT REPRESENT THE EXACT LOCAION, TYPE OF COMPONENT NOR MANNER OF CONSTRUCTION. THE ENGINEER, OR THE ENGINEER'S REPRESENTATIVE, HAS MADE PERIODIC VISITS TO THE SITE TO OBSERVE THE PROGRESS OF THE EXECUTED WORK. AND HEREBY CERTIFIES, BASED UPON THE KNOWLEDGE DERIVED THERE-FROM AND IN ACCORDANCE WITH THE DEPARTMENT OF PROFESSIONAL REGULATION RULE 21-1-1B.011.(4) THAT THESE RECORD DRAWINGS ACCURATELY REFLECT THE WORK PERFORMED.

NO.	DATE	ISSUED FOR	BY
2	01/08	RECORD DRAWINGS	ES
1	10/03	BID SET	ML

DESIGNED M.E.L.
DRAWN M.E.L.
CHECKED P.F.H.
PROJ. ENGR. P.A.D.

HILLERS ELECTRICAL ENGINEERING, INC.
23257 STATE ROAD 7, SUITE 100
BOCA RATON, FLORIDA 33428
(561) 451-9165
(561) 451-4886 FAX
LICENSE NO: EB 0006877
MARK E. LUTHER P.E.
No. 48801

HAZEN AND SAWYER
Environmental Engineers & Scientists
4000 Hollywood Boulevard, Suite 750N
Hollywood, Florida 33021
Certificate of Authorization Number: 2771

SCALE: NONE

CONTRACT: 40406
CLIENTS PROJECT:
ENGINEERS PROJECT: 40406
CAD REFERENCE: 40406E22.DWG

CITY OF HALLANDALE BEACH
City of Choice
CITY OF HALLANDALE BEACH
UTILITIES DEPARTMENT

6 MGD MEMBRANE SOFTENING W.T.P.

INSTRUMENTATION AND CONTROL
RISER DIAGRAMS – SHEET 4

DATE: JANUARY 2008
SHEET: 132 OF 162
DRAWING: E-22

9/28/2007 3:46 P.M. - 42 PLWD - H:\40406\FIG\TECHMEMO4\40406FIG4-2.dwg - XREFS: - PS 1=1

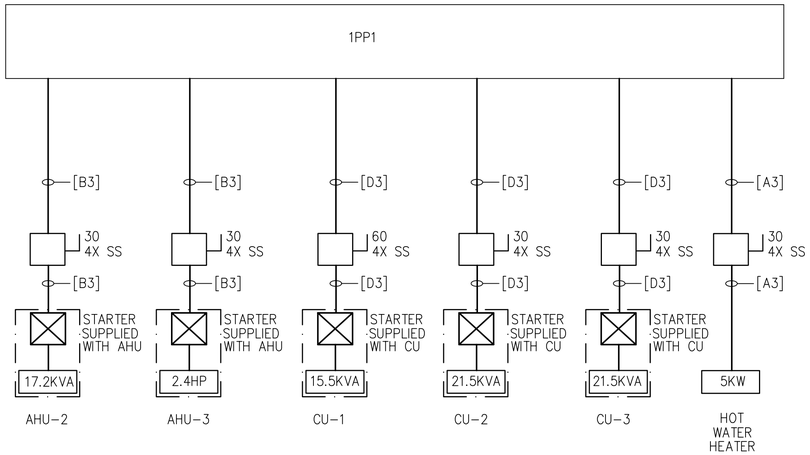

PANEL 1PP1 RISER DIAGRAM

NOT TO SCALE

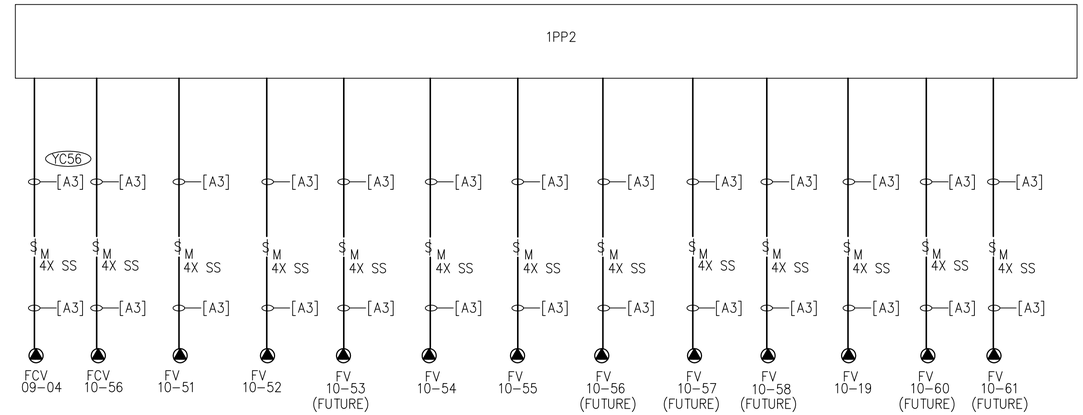

PANEL 1PP2 RISER DIAGRAM

NOT TO SCALE

NOTES:

1. CABLE FURNISHED BY EQUIPMENT SUPPLIER. PROVIDE AND INSTALL 3/4"C. VERIFY CONDUIT SIZE WITH EQUIPMENT SUPPLIER.
2. NOT ALL CONDUITS AND CABLES SHOWN. SEE OTHER PLAN DRAWINGS FOR ADITIONAL CONDUITS AND CABLES.
3. CONTRACTOR IS ALLOWED TO COMBINE CONTROL AND INSTRUMENTATION WIRE AS LONG AS WORK IS ACCOMPLISHED IN ACCORDANCE WITH THE NEC.
4. REFER TO ARCHITECTURAL PLAN FOR LOCATION OF ROLL-UP SHUTTERS.

KEYED NOTES:

1. MOUNT MOTOR STARTER 5'-6" AFF BELOW OR NEAR EXHAUST FAN.
2. CONTRACTOR SHALL INSTALL MOMENTARY SWITCH PROVIDED BY SHUTTER MANUFACTURER NEXT TO WINDOW INSIDE ROOM AS PER MANUFACTURERS RECOMMENDATIONS.
3. CONTRACTOR SHALL INSTALL R12 RELAYS SUPPLIED BY SHUTTER MANUFACTURER AS REQUIRED BY MANUFACTURERS INSTRUCTIONS.
4. CONTRACTOR SHALL INSTALL MASTER MOMENTARY SWITCH PROVIDED BY SHUTTER MANUFACTURER IN LOCATION AS REQUIRED BY OWNER. COORDINATE LOCATION WITH OWNER PRIOR TO INSTALLATION AND INSTALL WIRING AND CONDUIT AS NECESSARY FOR A COMPLETE WORKING SYSTEM IN PLACE.
5. POWER CORD SUPPLIED WITH SHUTTER MOTOR.
6. CONTRACTOR SHALL INSTALL RECEPTACLE FOR ROLL-UP SHUTTERS NEXT TO RELAY UNIT. SEE FLOOR PLAN FOR LOCATION AND CIRCUIT.
7. CONTRACTOR SHALL INSTALL RELAY SUPPLIED BY SHUTTER MANUFACTURER AS REQUIRED BY MANUFACTURERS INSTRUCTIONS.
8. INSTALL STARTER AND CONTROL DOOR CONTROL STATION PER DOOR MANUFACTURER'S REQUIREMENTS FOR A COMPLETE WORKING SYSTEM IN PLACE.
9. CONTRACTOR SHALL FURNISH AND INSTALL CONDUITS TO ALL FUTURE EQUIPMENT.

CIRCUIT LEGEND

[A1] = [3/4"C, 2#14, 1#14G]
[A3] = [3/4"C, 3#12, 1#12G]
[B2] = [3/4"C, 2#12, 1#12G]
[B3] = [3/4"C, 3#10, 1#10G]
[C1] = [3/4"C, 4#14, 1#14G]
[C3] = [1"C, 3#8, 1#8G]
[C2] = [3/4"C, 2#10, 1#10G]
[D3] = [1"C, 3#6, 1#10G]
[E1] = [3/4"C, 6#14, 1#14G]
[G1] = [3/4"C, 9#14, 1#14G]
[J3] = [1 1/2"C, 3#2, 1#8G]
[W1] = [1"C, 18#14, 1#14G]
[R1] = [3/4"C, 1-TYPE B, TW SHLD PR]
[S1] = [3/4"C, 2-TYPE B, TW SHLD PR]
[U1] = [1 1/4"C, 4-TYPE B, TW SHLD PR]
[V1] = [1 1/2"C, 8-TYPE B, TW SHLD PR]
[X1] = [4"C, 40-TYPE B, TW SHLD PR]

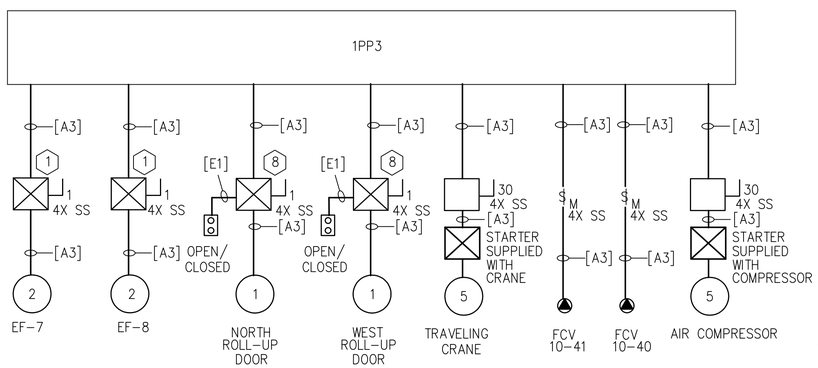

PANEL 1PP3 RISER DIAGRAM

NOT TO SCALE

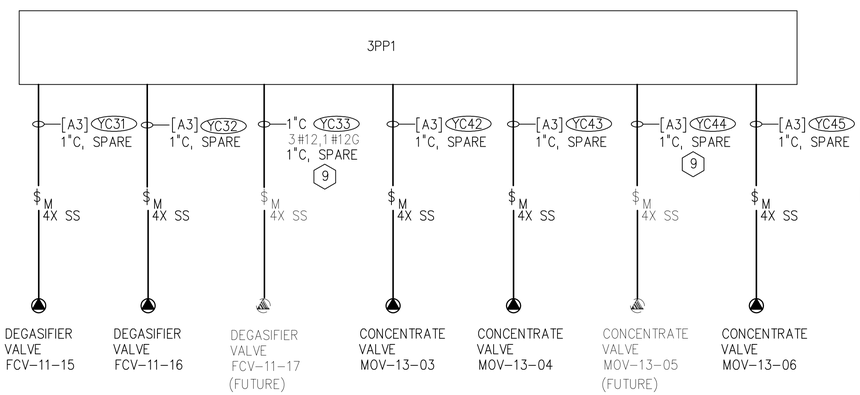

PANEL 3PP1 RISER DIAGRAM

NOT TO SCALE

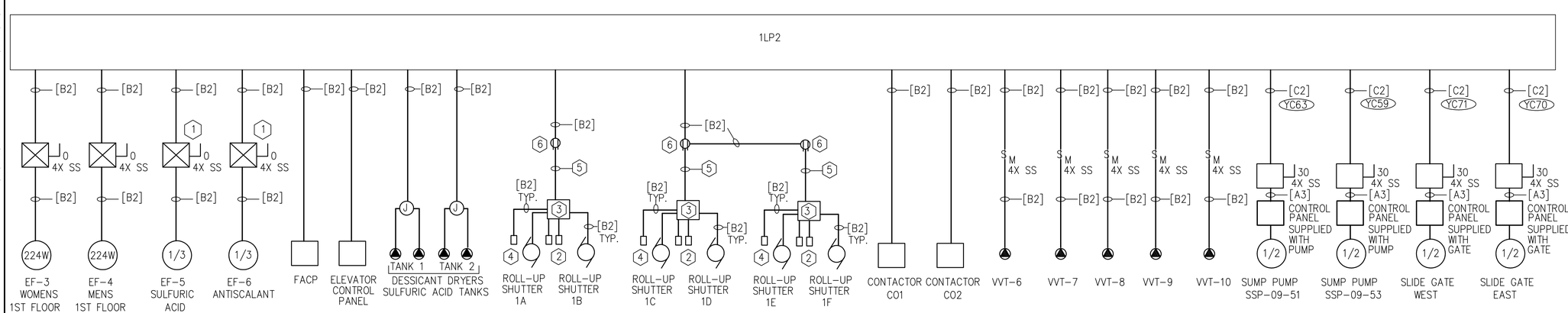

PANEL 1LP2 RISER DIAGRAM

NOT TO SCALE

RECORD DRAWINGS

REVISIONS DRAWN BY: E. SMITH DATE: DEC. 2007

THESE RECORD DRAWINGS HAVE BEEN PREPARED, IN PART, ON THE BASIS OF INFORMATION COMPILED BY OTHERS, AND MAY NOT REPRESENT THE EXACT LOCAION, TYPE OF COMPONENT, NOR MANNER OF CONSTRUCTION. THE ENGINEER, OR THE ENGINEER'S REPRESENTATIVE, HAS MADE PERIODIC VISITS TO THE SITE TO OBSERVE THE PROGRESS OF THE EXECUTED WORK, AND HEREBY CERTIFIES, BASED UPON THE KNOWLEDGE DERIVED THERE-FROM AND IN ACCORDANCE WITH THE DEPARTMENT OF PROFESSIONAL REGULATION RULE 21-1-1B.011.(4) THAT THESE RECORD DRAWINGS ACCURATELY REFLECT THE WORK PERFORMED.

NO.	DATE	ISSUED FOR	BY
2	01/08	RECORD DRAWINGS	ES
1	10/03	BID SET	ML

DESIGNED M.E.L.
DRAWN M.E.L.
CHECKED P.F.H.
PROJ. ENGR. P.A.D.

HILLERS ELECTRICAL ENGINEERING, INC.
23257 STATE ROAD 7, SUITE 100
BOCA RATON, FLORIDA 33428
(561) 451-9165
(561) 451-4886 FAX
LICENSE NO: EB 0006877
MARK E. LUTHER P.E.
No. 48801

HAZEN AND SAWYER
Environmental Engineers & Scientists
4000 Hollywood Boulevard, Suite 750N
Hollywood, Florida 33021
Certificate of Authorization Number: 2771

SCALE: NONE

CONTRACT: 40406
CLIENTS PROJECT:
ENGINEERS PROJECT: 40406
CAD REFERENCE: 40406E23.DWG

CITY OF HALLANDALE BEACH
UTILITIES DEPARTMENT

6 MGD MEMBRANE SOFTENING W.T.P.

POWER RISER DIAGRAMS

SHEET 1

DATE: JANUARY 2008
SHEET: 133 OF 162
DRAWING: E-23

9/28/2007/3:46 P.M. - 42 HLWD - H:\40406\FIG\TECHMEMO4\40406FIG4-2.dwg - XREFS: - PS 1=1

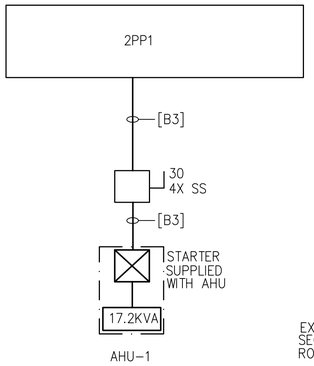

PANEL 2PP1 RISER DIAGRAM

NOT TO SCALE

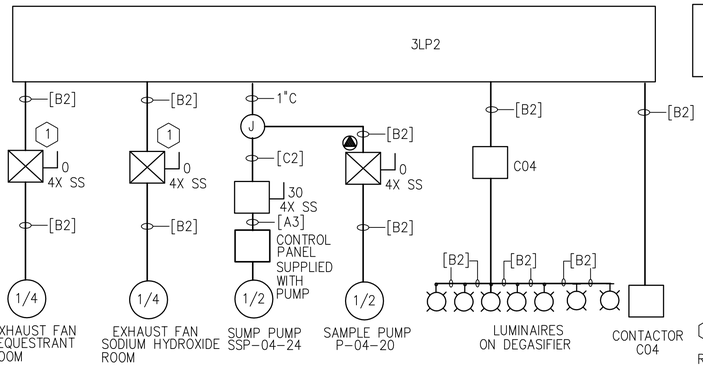

PANEL 3LP2 RISER DIAGRAM

NOT TO SCALE

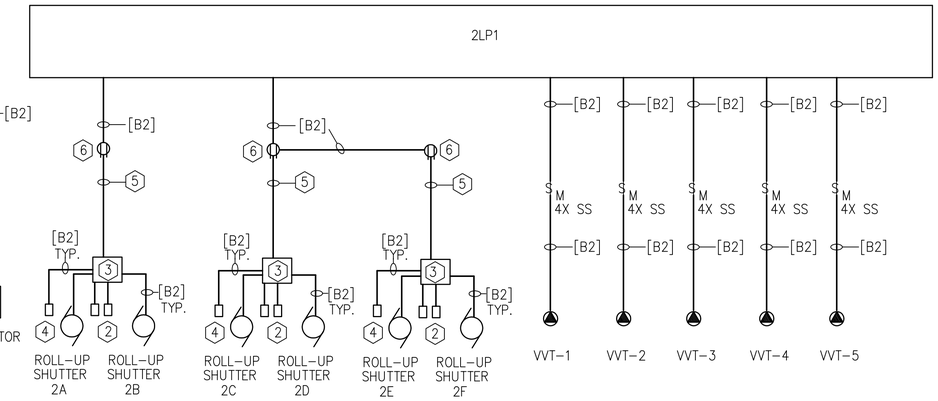

PANEL 2LP1 RISER DIAGRAM

NOT TO SCALE

KEY NOTES:

1. MOUNT MOTOR STARTER 5'-6" AFF BELOW OR NEAR EXHAUST FAN.
2. CONTRACTOR SHALL INSTALL MOMENTARY SWITCH PROVIDED BY SHUTTER MANUFACTURER NEXT TO WINDOW INSIDE ROOM AS PER MANUFACTURERS RECOMMENDATIONS.
3. CONTRACTOR SHALL INSTALL R12 RELAYS SUPPLIED BY SHUTTER MANUFACTURER AS REQUIRED BY MANUFACTURERS INSTRUCTIONS.
4. CONTRACTOR SHALL INSTALL MASTER MOMENTARY SWITCH PROVIDED BY SHUTTER MANUFACTURER IN LOCATION AS REQUIRED BY OWNER. COORDINATE LOCATION WITH OWNER PRIOR TO INSTALLATION AND INSTALL WIRING AND CONDUIT AS NECESSARY FOR A COMPLETE WORKING SYSTEM IN PLACE.
5. POWER CORD SUPPLIED WITH SHUTTER MOTOR.
6. CONTRACTOR SHALL INSTALL RECEPTACLE FOR ROLL-UP SHUTTERS NEXT TO RELAY UNIT. SEE FLOOR PLAN FOR LOCATION AND CIRCUIT.
7. CONTRACTOR SHALL INSTALL RELAY SUPPLIED BY SHUTTER MANUFACTURER AS REQUIRED BY MANUFACTURERS INSTRUCTIONS.
8. INSTALL STARTER AND CONTROL DOOR CONTROL STATION PER DOOR MANUFACTURER'S REQUIREMENTS FOR A COMPLETE WORKING SYSTEM IN PLACE.

NOTES:

1. CABLE FURNISHED BY EQUIPMENT SUPPLIER. PROVIDE AND INSTALL 3/4"C. VERIFY CONDUIT SIZE WITH EQUIPMENT SUPPLIER.
2. NOT ALL CONDUITS AND CABLES SHOWN. SEE OTHER PLAN DRAWINGS FOR ADITIONAL CONDUITS AND CABLES.
3. CONTRACTOR IS ALLOWED TO COMBINE CONTROL AND INSTRUMENTATION WIRE AS LONG AS WORK IS ACCOMPLISHED IN ACCORDANCE WITH THE NEC.
4. AT THE TIME OF BIDDING THE CONTRACTOR SHALL VERIFY THE ACTUAL BREAKER AND CONDUIT/WIRE SIZE REQUIRED BASED UPON THE VALVES TO BE SUPPLIED. CONTRACTOR SHALL ADJUST BREAKER AND CONDUIT/WIRE SIZE AS NECESSARY AND INCLUDE PROPOSED CHANGES IN HIS BID.

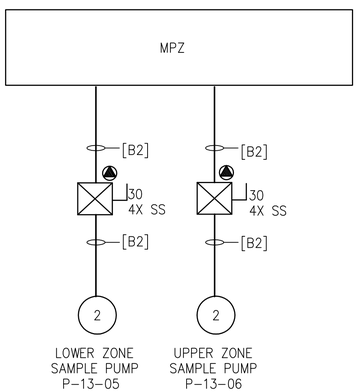

MPZ RISER DIAGRAM

NOT TO SCALE

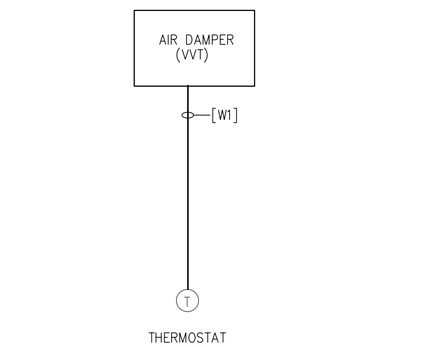

NOTE: REFER TO PLAN DRAWINGS FOR APPROXIMATE LOCATIONS. COORDINATE WITH HVAC CONTRACTOR FOR FINAL LOCATIONS.

TYPICAL AIR DAMPER (VVT) RISER DIAGRAM

NOT TO SCALE

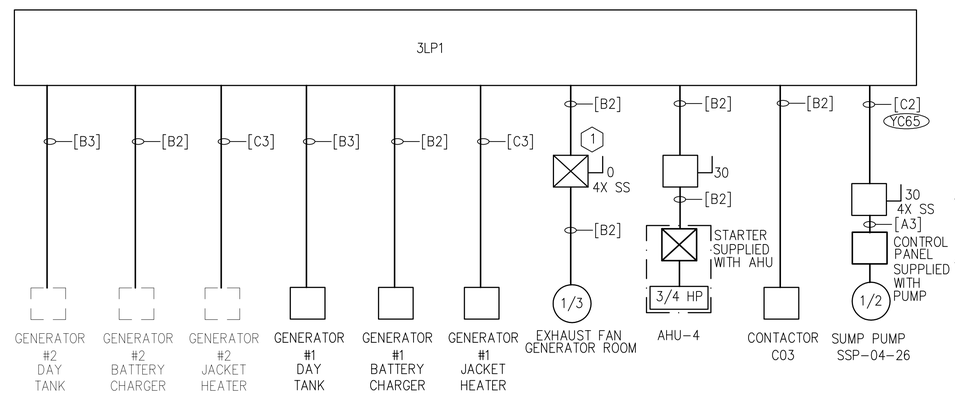

PANEL 3LP1 RISER DIAGRAM

NOT TO SCALE

CIRCUIT LEGEND

[A1] = [3/4"C, 2#14, 1#14G]
[A3] = [3/4"C, 3#12, 1#12G]
[B2] = [3/4"C, 2#12, 1#12G]
[B3] = [3/4"C, 3#10, 1#10G]
[C2] = [3/4"C, 2#10, 1#10G]
[C1] = [3/4"C, 4#14, 1#14G]
[E1] = [3/4"C, 6#14, 1#14G]
[G1] = [3/4"C, 11#14, 1#14G]
[W1] = [1"C, 18#14, 1#14G]
[R1] = [3/4"C, 1-TYPE B, TW SHLD PR]
[S1] = [3/4"C, 2-TYPE B, TW SHLD PR]
[U1] = [1 1/4"C, 4-TYPE B, TW SHLD PR]
[V1] = [1 1/2"C, 8-TYPE B, TW SHLD PR]
[X1] = [4"C, 40-TYPE B, TW SHLD PR]
[Y1] = [4"C, 80#14, 1#14G]

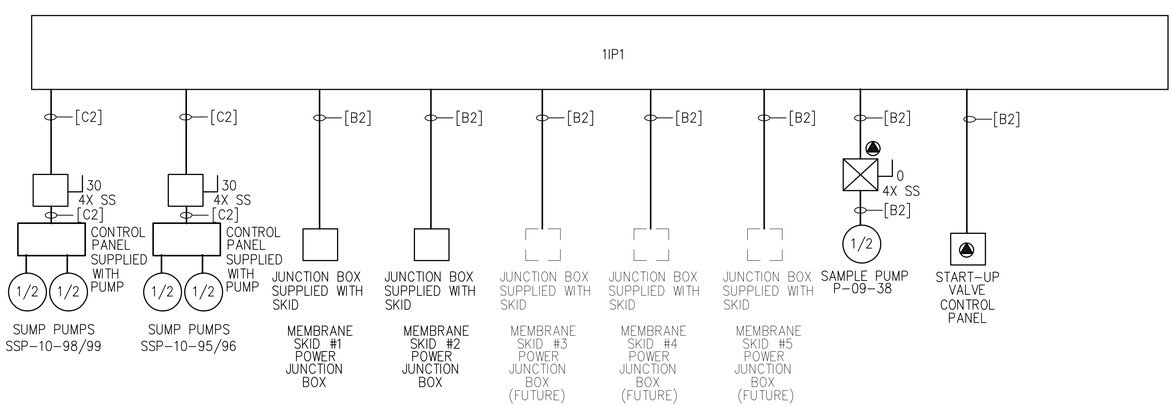

PANEL 1IP1 RISER DIAGRAM

NOT TO SCALE

NOTE: INSTALL CONDUIT FOR ALL FUTURE EQUIPMENT.

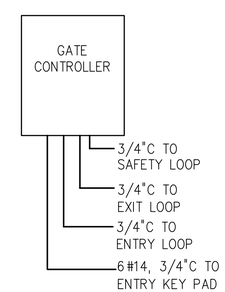

SLIDE GATE RISER

NOT TO SCALE

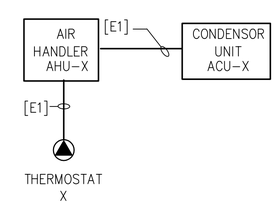

AIR HANDLER RISER DIAGRAM

NOT TO SCALE

X = 1A, 1B, 2A, 2B, 2C, 2D

RECORD DRAWINGS

REVISIONS DRAWN BY: E. SMITH DATE: DEC. 2007

THESE RECORD DRAWINGS HAVE BEEN PREPARED, IN PART, ON THE BASIS OF INFORMATION COMPILED BY OTHERS, AND MAY NOT REPRESENT THE EXACT LOCAION, TYPE OF COMPONENT NOR MANNER OF CONSTRUCTION. THE ENGINEER, OR THE ENGINEER'S REPRESENTATIVE, HAS MADE PERIODIC VISITS TO THE SITE TO OBSERVE THE PROGRESS OF THE EXECUTED WORK AND HEREBY CERTIFIES, BASED UPON THE KNOWLEDGE DERIVED THERE-FROM AND IN ACCORDANCE WITH THE DEPARTMENT OF PROFESSIONAL REGULATION RULE 21-1-1B.011.(4) THAT THESE RECORD DRAWINGS ACCURATELY REFLECT THE WORK PERFORMED.

NO.	DATE	ISSUED FOR	BY
3	01/08	RECORD DRAWINGS	ES
2	11/05	ADD EXHAUST FANS	SFC
1	05/04	BID SET	ML

DESIGNED M.E.L.
DRAWN M.E.L.
CHECKED P.F.H.
PROJ. ENGR. P.A.D.

HILLERS ELECTRICAL ENGINEERING, INC.
23257 STATE ROAD 7, SUITE 100
BOCA RATON, FLORIDA 33428
(561) 451-9165
(561) 451-4886 FAX
LICENSE NO: EB 0006877
MARK E. LUTHER P.E.
No. 48801

HAZEN AND SAWYER
Environmental Engineers & Scientists
4000 Hollywood Boulevard, Suite 750N
Hollywood, Florida 33021
Certificate of Authorization Number: 2771

SCALE
AS SHOWN

CONTRACT: 40406
CLIENTS PROJECT:
ENGINEERS PROJECT: 40406
CAD REFERENCE: 40406E24.DWG

CITY OF HALLANDALE BEACH
UTILITIES DEPARTMENT

6 MGD MEMBRANE SOFTENING W.T.P.

POWER RISER DIAGRAMS
SHEET 2

DATE: JANUARY 2008
SHEET: 134 OF 162
DRAWING: E-24

9/28/2007 3:46 P.M. - 42 %WD - H:\40406\FIG\TECHMEMO4\40406FIG4-2.dwg - XREFS: - PS 1=1

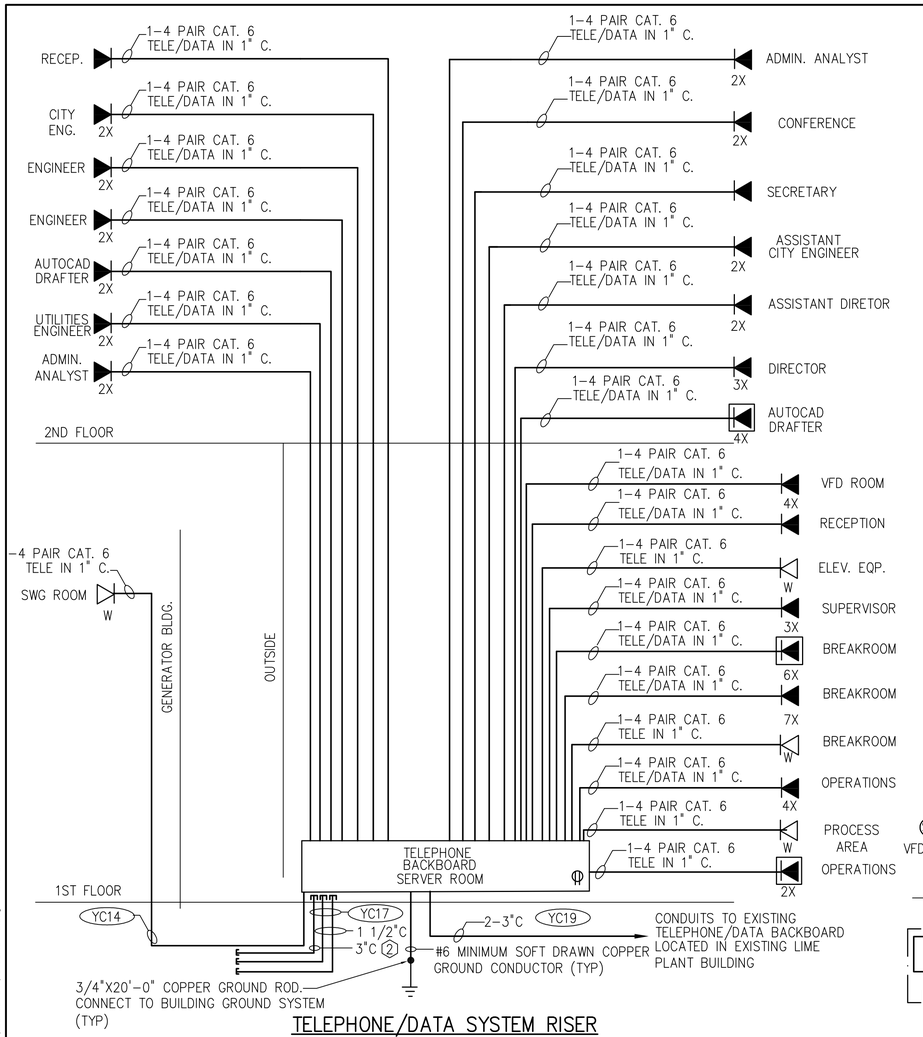

TELEPHONE/DATA SYSTEM RISER PROCESS AND GENERATOR BUILDING

NOT TO SCALE

NOTES:

1. ALL DEVICES IN THE PROCESS AND CHEMICAL ROOMS SHALL BE NEMA 4X CORROSION RESISTANT AND WEATHER RESISTANT.
2. PROVIDE A FLASHING "DO NOT USE ELEVATOR" HAT IN ELEVATOR CAB. HAT SHALL BE CONTROLLED BY THE ELEVATOR MACHINE ROOM SMOKE DETECTOR ONLY.
3. ALL N.A.C. DEVICES SHALL BE SYNICRONIZED AS REQUIRED BY CODE.
4. ALL SYSTEM DEVICES SHALL BE INSTALLED INACCORDANCE WITH FLORIDA BUILDING CODE, NFPA CODES, NATIONAL ELECTRICAL CODE, AND ALL APPLICABLE COLLIER COUNTY CODES WITH RESPECT TO FIRE ALARM SYSTEMS.
5. THE FIRE ALARM CONTRACTOR SHALL COMPLETELY INSTALL AND TEST THE COMPLETE FIRE ALARM SYSTEM PRIOR TO CONTACTING THE FIRE MARSHAL'S OFFICE FOR THE FINAL INSPECTION/CERIFICATION PER NFPA 72, SECTION 1-6-1. BEFORE REQUESTING FINAL APPROVAL OF THE INSTALLATION, THE FIRE ALARM CONTRACTOR SHALL FURNISH A WRITTEN STATEMENT TO THE EFFECT THAT THE SYSTEM HAS BEEN INSTALLED IN ACCORDANCE WITH THE APPROVED PLANS AND TESTED IN ACCORDANCE WITH THE MANUFACTURERS SPECIFICATIONS AND REQUIREMENTS OF NFPA 72. THE FIRE ALARM CONTRACTOR MUST SUPPLY SUFFICIENT MANPOWER TO CONDUCT THE TEST.
6. CONTRACTOR SHALL INSTALL ALL CONDUIT IN OFFICE SPACES AND FINISHED AREAS CONCEALED IN WALLS AND CEILING SPACES. CONDUIT IN PROCESS AREAS, STORAGE AREAS, WAREHOUSES, UNFINISHED ELECTRICAL ROOMS AND UNFINISHED SPACES SHALL BE PERMITTED TO BE INSTALLED AS A SURFACE MOUNT SYSTEM
7. ALL SIGNAL LINE CIRCUITS (SLC) SHALL BE CLASS A STYLE 7
8. ALL NOTIFICATION APPLIANCE CIRCUITS (NAC) SHALL BE CLASS A STYLE Z.

KEYED NOTES:

1. BREAKER SHALL BE LOCKED OPEN AND LABELED PER CODE.
2. STUB CONDUITS OUT 5 FEET FROM BUILDING ON SOUTH SIDE, CAP AND MARK ON SURFACE. PROVIDE PULL STRING.

CIRCUIT SCHEDULE

[B2] = [3/4"C, 2#12, 1#12G]
[U] = [3/4"C, 2/C#16 TWISTED UNSHIELDED FPL CABLE FOR SLC AND 2#12 THWN FOR AUXILIARY POWER]
[V] = [3/4"C, 2-#12 THWN FOR NAC INDICATING DEVICES]
[W] = [1"C, 2/C#18 TWISTED SHIELDED VNTC CABLE FOR SLC AND 2#12 THWN FOR AUXILIARY POWER]
[X] = [1#10 COPPER GROUND WIRE TO GROUND GRID]

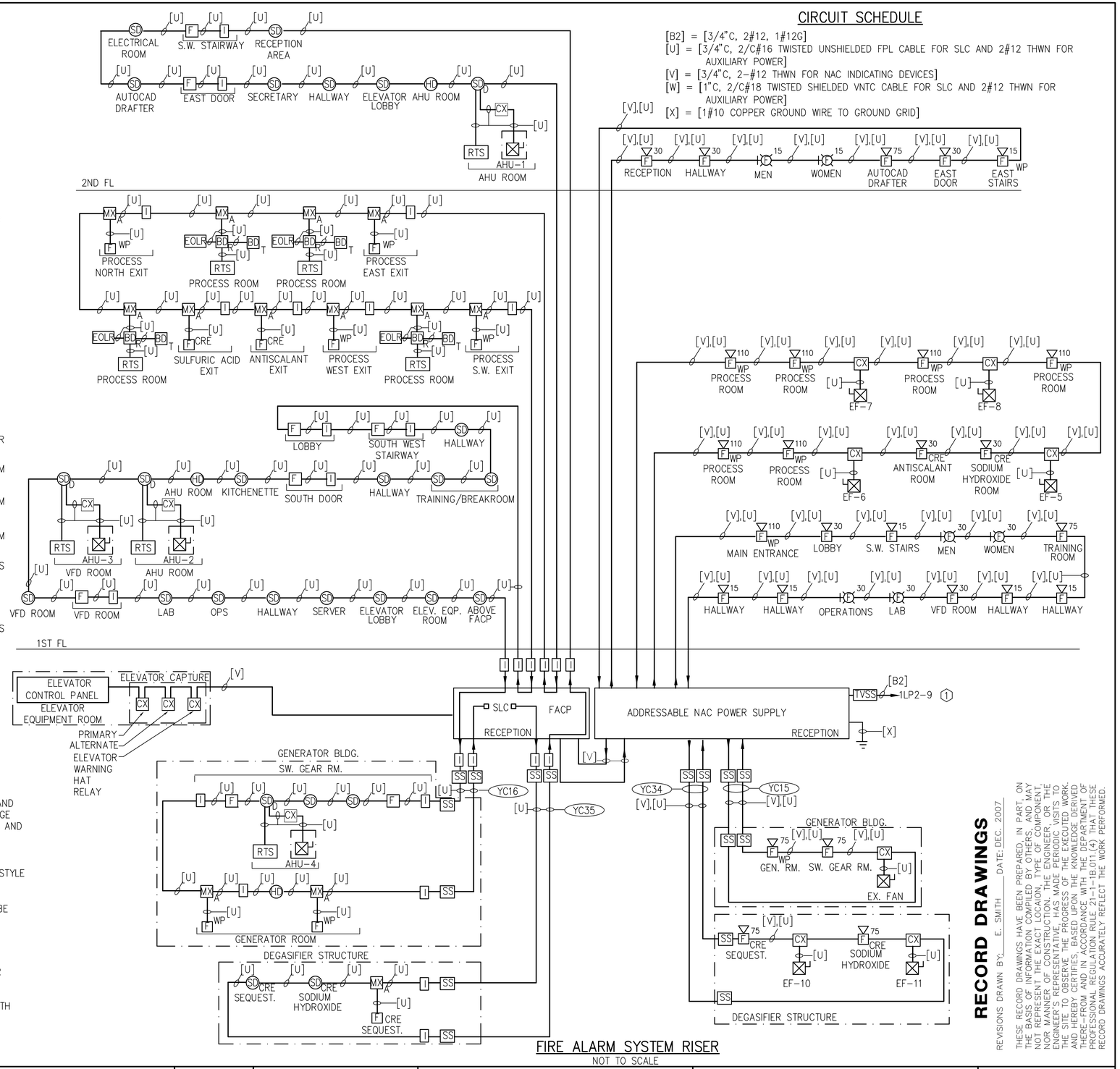

FIRE ALARM SYSTEM RISER

NOT TO SCALE

RECORD DRAWINGS

REVISIONS DRAWN BY: E. SMITH DATE: DEC. 2007

THESE RECORD DRAWINGS HAVE BEEN PREPARED, IN PART, ON THE BASIS OF INFORMATION COMPILED BY OTHERS, AND MAY NOT REPRESENT THE EXACT LOCAION, TYPE OF COMPONENT, NOR MANNER OF CONSTRUCTION. THE ENGINEER, OR THE ENGINEER'S REPRESENTATIVE, HAS MADE PERIODIC VISITS TO THE SITE TO OBSERVE THE PROGRESS OF THE CONSTRUCTION WORK. THEREFROM AND IN ACCORDANCE WITH THE DEPARTMENT OF PROFESSIONAL REGULATION RULE 21-1.B.011 (4) THAT THESE RECORD DRAWINGS ACCURATELY REFLECT THE WORK PERFORMED.

NO.	DATE	ISSUED FOR	BY
3	01/08	RECORD DRAWINGS	ES
2	11/05	ADD EXHAUST FANS	SFC
1	05/04	BID SET	ML

DESIGNED M.E.L.
DRAWN M.E.L.
CHECKED P.F.H.
PROJ. ENGR. P.A.D.

HILLERS ELECTRICAL ENGINEERING, INC.
23257 STATE ROAD 7, SUITE 100
BOCA RATON, FLORIDA 33428
(561) 451-9165
(561) 451-4886 FAX
LICENSE NO: EB 0006877
MARK E. LUTHER P.E.
No. 48801

HAZEN AND SAWYER
Environmental Engineers & Scientists
4000 Hollywood Boulevard, Suite 750N
Hollywood, Florida 33021
Certificate of Authorization Number: 2771

SCALE: AS SHOWN

CONTRACT: 40406
CLIENTS PROJECT:
ENGINEERS PROJECT: 40406
CAD REFERENCE: 40406E25.DWG

CITY OF HALLANDALE BEACH
UTILITIES DEPARTMENT

6 MGD MEMBRANE SOFTENING W.T.P.

MISC. RISER DIAGRAMS

SHEET 1

DATE: JANUARY 2008
SHEET: 135 OF 162
DRAWING: E-25

9/29/2011 3:46 P.M. - 42 HLND - H:\40406\FIG\TECHMEMO\40406FIG4-2.dwg - XREFS: - PS 1=1

PANELBOARD SCHEDULE '1PP1'

BUS AMPS A	BUS AMPS B	BUS AMPS C	LOAD	POLES	AMPS	BUS A B C	AMPS	POLES	LOAD	BUS AMPS A	BUS AMPS B	BUS AMPS C
20.7			AHU-2	3	30	1 2	30	3	CU-1	18.6		
	20.7					3 4					18.6	
		20.7				5 6						18.6
3.4			AHU-3	3	15	7 8	50	3	CU-2	26.0		
	3.4					9 10					26.0	
		3.4				11 12						26.0
6.0			HOT WATER HEATER (5 KW)	3	20	13 14	50	3	CU-3	26.0		
	6.0					15 16					26.0	
		6.0				17 18						26.0
–			AHU-2 HEAT STRIP	3	20	19 20	20	3	SPARE			
	–					21 22						
		–				23 24						
			SPARE	3	20	25 26	20	3	SPARE			
						27 28						
						29 30						
			SPARE	3	20	31 32	20	3	SPARE			
						33 34						
						35 36						
			SPARE	3	20	37 38	20	3	SPARE			
						39 40						
						41 42						

TOTAL AMPS: BUS A 100.7 BUS B 100.7 BUS C 100.7 CONNECTED Kva 83.7

RATED VOLTAGE: ☐ 120/208 ■ 480 3 PHASE, 3 WIRE | BRANCH POLES ☐ 12 ☐ 20 ☐ 30 ■ 42
RATED AMPS: ☐ 100 ■ 225 ☐ 400 ☐ _____ | CABINET: ■ SURFACE ☐ FLUSH
NEUTRAL BUS ☐ 100% ☐ 150% ☐ 200% | ■ GROUND BUS | ■ HINGED DOOR | ■ KEYED DOOR LATCH | LOCATION: VFD/ELECTRICAL ROOM
■ CIRCUIT BREAKER (BOLT-IN) BRANCH DEVICES | ■ TVSS | ENCLOSURE TYPE ■ NEMA 1 ☐ NEMA 3R ☐ NEMA 4X ☐ _____
■ MAIN LUGS ONLY | MAIN___ AMPS ☐ BREAKER | ☐ _____ TO BE GFI BREAKERS
PANELBOARD MUST BE RATED TO INTERRUPT A SHORT CIRCUIT ISC OF ____35,000 AMPS SYMMETRICAL.
APPROVED MF'RS. SQUARE D, GE, CUTLER-HAMMER, ALLEN-BRADLEY, SIEMANS | COPPER BUSSES | MAIN LUGS __1_____ SETS SIZE: 225A_____

PANELBOARD SCHEDULE "1PP2"

BUS AMPS A	BUS AMPS B	BUS AMPS C	LOAD	POLES	AMPS	BUS A B C	AMPS	POLES	LOAD	BUS AMPS A	BUS AMPS B	BUS AMPS C
1.8			VALVE FCV-10-56	3	20	1 2	20	3	VALVE FV-10-57	1.8		
	1.8					3 4					1.8	
		1.8				5 6						1.8
1.8			VALVE FV-10-51 & 81	3	20	7 8	20	3	VALVE FV-10-58	1.8		
	1.8					9 10					1.8	
		1.8				11 12						1.8
1.8			VALVE FV-10-52 & 82	3	20	13 14	20	3	CLEAN. CNTRL SYS. VALVE FV-10-19	1.8		
	1.8					15 16					1.8	
		1.8				17 18						1.8
1.8			FUTURE VALVE FV-10-53	3	20	19 20	20	3	FUTURE VALVE FV-10-60	1.8		
	1.8					21 22					1.8	
		1.8				23 24						1.8
1.8			VALVE FV-10-54 & 65	3	20	25 26	20	3	FUTURE VALVE FV-10-61	1.8		
	1.8					27 28					1.8	
		1.8				29 30						1.8
1.8			VALVE FV-10-55 & 66	3	20	31 32	20	3	FV-09-04	1.8		
	1.8					33 34					1.8	
		1.8				35 36						1.8
1.8			FUTURE VALVE FV-10-56	3	20	37 38	20	3	SPARE			
	1.8					39 40						
		1.8				41 42						

TOTAL CONNECTED AMPS: BUS A 23.4 BUS B 23.4 BUS C 23.4 CONNECTED Kva 19.4 TOTAL DEMAND AMPS: BUS A 7.2 BUS B 7.2 BUS C 7.2 DEMAND Kva 6.0

RATED VOLTAGE: ☐ 120/208 ■ 480 3 PHASE, 3 WIRE | BRANCH POLES ☐ 12 ☐ 20 ☐ 30 ■ 42
RATED AMPS: ■ 100 ☐ 225 ☐ 400 ☐ _____ | CABINET: ■ SURFACE ☐ FLUSH
NEUTRAL BUS ☐ 100% ☐ 150% ☐ 200% | ■ GROUND BUS | ■ HINGED DOOR | ☐ KEYED DOOR LATCH | LOCATION: MEMBRANE BLDG. MF ROOM
■ CIRCUIT BREAKER (BOLT-IN) BRANCH DEVICES | ■ TVSS | ENCLOSURE TYPE ☐ NEMA 1 ☐ NEMA 3R ■ NEMA 4X ☐ _____
■ MAIN LUGS ONLY | MAIN___ AMPS ☐ BREAKER | ☐ _____ TO BE GFI BREAKERS
PANELBOARD MUST BE RATED TO INTERRUPT A SHORT CIRCUIT ISC OF ____35,000 AMPS SYMMETRICAL.
APPROVED MF'RS. SQUARE D, GE, CUTLER-HAMMER, ALLEN-BRADLEY, SIEMANS | COPPER BUSSES | MAIN LUGS __1_____ SETS SIZE: 100A_____

PANELBOARD SCHEDULE "1PP3"

BUS AMPS A	BUS AMPS B	BUS AMPS C	LOAD	POLES	AMPS	BUS A B C	AMPS	POLES	LOAD	BUS AMPS A	BUS AMPS B	BUS AMPS C
3.4			EF-7 (2 HP)	3	20	1 2	20	3	NORTH ROLL-UP DOOR	2.1		
	3.4					3 4					2.1	
		3.4				5 6						2.1
3.4			EF-8 (2 HP)	3	20	7 8	20	3	WEST ROLL-UP DOOR	2.1		
	3.4					9 10					2.1	
		3.4				11 12						2.1
1.8			VALVE FCV-10-40	3	20	13 14	20	3	TRAVELLING BRIDGE CRANE	7.6		
	1.8					15 16					7.6	
		1.8				17 18						7.6
1.8			VALVE FCV-10-41	3	20	19 20	20	3	AIR COMPRESSOR (5 HP)	7.6		
	1.8					21 22					7.6	
		1.8				23 24						7.6
			SPARE	3	20	25 26	20	3	SPARE			
						27 28						
						29 30						
			SPARE	3	20	31 32	20	3	SPARE			
						33 34						
						35 36						
			SPARE	3	20	37 38	20	3	SPARE			
						39 40						
						41 42						

TOTAL CONNECTED AMPS: BUS A 29.8 BUS B 29.8 BUS C 29.8 CONNECTED Kva 24.8

RATED VOLTAGE: ☐ 120/208 ■ 480 3 PHASE, 3 WIRE | BRANCH POLES ☐ 12 ☐ 20 ☐ 30 ■ 42
RATED AMPS: ■ 100 ☐ 225 ☐ 400 ☐ _____ | CABINET: ■ SURFACE ☐ FLUSH
NEUTRAL BUS ☐ 100% ☐ 150% ☐ 200% | ■ GROUND BUS | ■ HINGED DOOR | ■ KEYED DOOR LATCH | LOCATION: MEMBRANE FEED ROOM
☐ CIRCUIT BREAKER (BOLT-IN) BRANCH DEVICES | ■ TVSS | ENCLOSURE TYPE ☐ NEMA 1 ☐ NEMA 3R ■ NEMA 4X ☐ _____
■ MAIN LUGS ONLY | MAIN___ AMPS ☐ BREAKER | ☐ _____ TO BE GFI BREAKERS
PANELBOARD MUST BE RATED TO INTERRUPT A SHORT CIRCUIT ISC OF ____35,000 AMPS SYMMETRICAL.
APPROVED MF'RS. SQUARE D, GE, CUTLER-HAMMER, ALLEN-BRADLEY, SIEMANS | COPPER BUSSES | MAIN LUGS __1_____ SETS SIZE: 100A_____

PANELBOARD SCHEDULE "2PP1"

BUS AMPS A	BUS AMPS B	BUS AMPS C	LOAD	POLES	AMPS	BUS A B C	AMPS	POLES	LOAD	BUS AMPS A	BUS AMPS B	BUS AMPS C
20.7			AHU 1	3	30	1 2	50	3	TRANSFORMER 1 (PNL 2LP1)	36.0		
	20.7					3 4					36.0	
		20.7				5 6						36.0
–			TRANSFORMER 2	3	30	7 8	20	3	SPARE			
	–					9 10						
		–				11 12						
–			AHU 1 HEAT STRIP	3	30	13 14	30	3	SPARE			
	–					15 16						
		–				17 18						
			SPARE	3	30	19 20	30	3	SPARE			
						21 22						
						23 24						
			SPARE	3	20	25 26	20	3	SPARE			
						27 28						
						29 30						
			SPARE	3	20	31 32	20	3	SPARE			
						33 34						
						35 36						
			SPARE	3	20	37 38	20	3	SPARE			
						39 40						
						41 42						

TOTAL AMPS: BUS A 56.7 BUS B 56.7 BUS C 56.7 CONNECTED Kva 47.1

RATED VOLTAGE: ☐ 120/208 ■ 480 3 PHASE, 3 WIRE | BRANCH POLES ☐ 12 ☐ 20 ☐ 30 ■ 42
RATED AMPS: ■ 100 ☐ 225 ☐ 400 ☐ _____ | CABINET: ■ SURFACE ☐ FLUSH
NEUTRAL BUS ☐ 100% ☐ 150% ☐ 200% | ■ GROUND BUS | ■ HINGED DOOR | ■ KEYED DOOR LATCH | LOCATION: 2ND FLOOR ELECTRICAL ROOM
■ CIRCUIT BREAKER (BOLT-IN) BRANCH DEVICES | ■ TVSS | ENCLOSURE TYPE ■ NEMA 1 ☐ NEMA 3R ☐ NEMA 4X ☐ _____
■ MAIN LUGS ONLY | MAIN___ AMPS ☐ BREAKER | ☐ _____ TO BE GFI BREAKERS
PANELBOARD MUST BE RATED TO INTERRUPT A SHORT CIRCUIT ISC OF ____35,000 AMPS SYMMETRICAL.
APPROVED MF'RS. SQUARE D, GE, CUTLER-HAMMER, ALLEN-BRADLEY, SIEMANS | COPPER BUSSES | MAIN LUGS __1_____ SETS SIZE: 100A_____

RECORD DRAWINGS

REVISIONS DRAWN BY: E. SMITH DATE: DEC. 2007

THESE RECORD DRAWINGS HAVE BEEN PREPARED, IN PART, ON THE BASIS OF INFORMATION COMPILED BY OTHERS, AND MAY NOT REPRESENT THE EXACT LOCAION, TYPE OF COMPONENT, NOR MANNER OF CONSTRUCTION. THE ENGINEER, OR THE ENGINEER'S REPRESENTATIVE, HAS MADE PERIODIC VISITS TO THE SITE TO OBSERVE THE PROGRESS OF THE EXECUTED WORK AND HEREBY CERTIFIES, BASED UPON THE KNOWLEDGE DERIVED THERE-FROM AND IN ACCORDANCE WITH THE DEPARTMENT OF PROFESSIONAL REGULATION RULE 21-1-1B.011.(4) THAT THESE RECORD DRAWINGS ACCURATELY REFLECT THE WORK PERFORMED.

NO.	DATE	ISSUED FOR	BY
2	01/08	RECORD DRAWINGS	ES
1	10/03	BID SET	ML

DESIGNED M.E.L.
DRAWN M.E.L.
CHECKED P.F.H.
PROJ. ENGR. P.A.D.

HILLERS ELECTRICAL ENGINEERING, INC.
23257 STATE ROAD 7, SUITE 100
BOCA RATON, FLORIDA 33428
(561) 451-9165
(561) 451-4886 FAX
LICENSE NO: EB 0006877
MARK E. LUTHER P.E.
No. 48801

HAZEN AND SAWYER
Environmental Engineers & Scientists
4000 Hollywood Boulevard, Suite 750N
Hollywood, Florida 33021
Certificate of Authorization Number: 2771

SCALE NONE

CONTRACT: 40406
CLIENTS PROJECT:
ENGINEERS PROJECT: 40406
CAD REFERENCE: 40406E26.DWG

CITY OF HALLANDALE BEACH City of Choice
CITY OF HALLANDALE BEACH
UTILITIES DEPARTMENT

6 MGD MEMBRANE SOFTENING W.T.P.

SCHEDULES

SHEET 1

DATE: JANUARY 2008
SHEET: 136 OF 162
DRAWING: E-26

9/29/2001 3:46 P.M. - 42 HLND - H:\40406\FIG\TECHMEMO\40406FIG4-2.dwg - XREFS: - PS 1=1

PANELBOARD SCHEDULE "1LP1"

BUS AMPS A	BUS AMPS B	BUS AMPS C	LOAD	POLES	AMPS	BUS A B C	AMPS	POLES	LOAD	BUS AMPS A	BUS AMPS B	BUS AMPS C
8.0			LIGHTING – ELEC., A/C, KITCHENETTE	1	20	1 – 2	20	1	LIGHTING – HALLWAY	5.8		
	9.3		LIGHTING – TRAINING BREAKROOM	1	20	3 – 4	20	1	LIGHTING – LAB, OPERA., SUPERVISOR		7.6	
		10.8	LIGHTING – MEN, WOMEN RESTROOM	1	20	5 – 6	20	1	LIGHTING – LOBBY, STORAGE			8.8
			SPARE	1	20	7 – 8	30	1	LIGHTING – HI BAY	17.3		
	4.6		LIGHTING – OUTSIDE	1	20	9 – 10	30	1	LIGHTING – HI BAY		17.3	
		4.5	RECEPTACLES – TRAINING BREAKROOM	1	20	11 – 12	30	1	LIGHTING – HI BAY			17.3
13.0			LIGHTING – CHEMICAL ROOMS	1	20	13 – 14	30	1	LIGHTING – HI BAY	12.9		
	4.5		RECEPTACLES – KITCHENETTE	1	20	15 – 16	30	1	LIGHTING – HI BAY		12.9	
		6.0	RECEPTACLES – TRAINING BREAKROOM	1	20	17 – 18	20	1	RECEPTACLES – HALLWAY			6.0
9.0			RECEPTACLES – LOBBY, ELEV. EQUIP.	1	20	19 – 20	20	1	RECEPTACLES – MEN RESTROOM	6.0		
	7.5		RECEPTACLES – SUPERVISOR	1	20	21 – 22	20	1	RECEPTACLES – WOMEN RESTROOM		6.0	
		9.8	UNDER SINK DISPOSAL (1/2 HP)	1	20	23 – 24	20	1	RECEPTACLES – CHEMICAL ROOMS			6.0
7.5			RECEPTACLES – MEMBRANE AREA	1	20	25 – 26	20	1	RECEPTACLES – OUTSIDE	7.5		
	9.0		RECEPTACLES – MEMBRANE AREA	1	20	27 – 28	20	1	RECEPTACLES – OUTSIDE		7.5	
		9.0	RECEPTACLES – MEMBRANE AREA	1	20	29 – 30	20	1	RECEPTACLES – ELEC., A/C ROOM			4.5
4.5			RECEPTACLES – OPERATIONS	1	20	31 – 32	20	1	RECEPTACLES – SERVER ROOM	9.0		
	10.0		REFRIGERATOR	1	20	33 – 34	20	1	RECEPTACLES – LAB		6.0	
		9.0	RECEPTACLES – TRAINING BREAKROOM	1	20	35 – 36	30	1	RECEPTACLES – LAB			6.0
10.5			RECEPTACLES – LAB	1	20	37 – 38	20	1	DRINKING FOUNTAIN	5.1		
	9.0		RECEPTACLES – LAB	1	20	39 – 40	20	1	RECEPTACLES – LAB (REFRIGRATOR)		8.0	
		9.0	RECEPTACLES – LAB	1	20	41 – 42	20	1	RECEPTACLES – OPERATIONS (FLOOR)			6.0

TOTAL AMPS: BUS A_116.1 BUS B_119.2 BUS C_112.7 CONNECTED Kva_41.8

RATED VOLTAGE: ■ 120/208 ☐ 277/480 3 PHASE, 4 WIRE | BRANCH POLES ☐ 12 ☐ 20 ☐ 30 ■ 42
RATED AMPS: ☐ 100 ■ 225 ☐ 400 ☐ _____ | CABINET: ■ SURFACE ☐ FLUSH
NEUTRAL BUS ☐ 100% ■ 150% ☐ 200% | ■ GROUND BUS | ■ HINGED DOOR | ☐ KEYED DOOR LATCH | LOCATION: 1ST FLOOR ELECTRICAL ROOM
■ CIRCUIT BREAKER (BOLT-IN) BRANCH DEVICES | ■ TVSS | ENCLOSURE TYPE ■ NEMA 1 ☐ NEMA 3R ☐ NEMA 4X ☐ _____
☐ MAIN LUGS ONLY | MAIN 150 AMPS ■ BREAKER | ☐ _____ TO BE GFI BREAKERS
PANELBOARD MUST BE RATED TO INTERRUPT A SHORT CIRCUIT ISC OF ____22,000 AMPS SYMMETRICAL.
APPROVED MF'RS. SQUARE D, GE, CUTLER-HAMMER, ALLEN-BRADLEY, SIEMANS | COPPER BUSSES | MAIN LUGS _____ SETS SIZE: _____

PANELBOARD SCHEDULE "1LP2"

BUS AMPS A	BUS AMPS B	BUS AMPS C	LOAD	POLES	AMPS	BUS A B C	AMPS	POLES	LOAD	BUS AMPS A	BUS AMPS B	BUS AMPS C
2.0			EF-3 (WOMENS 1ST FLOOR)	1	20	1 – 2	20	1	DESS. DRYER SULF. ACID TANK 2	4.0		
	2.0		EF-4 (MENS 1ST FLOOR)	1	20	3 – 4	20	1	VVT-6		6.0	
		6.0	VVT-10	1	20	5 – 6	20	1	VVT-7			6.0
3.0			EF-6 (ANTISCALANT)	1	20	7 – 8	20	1	MENS HAND DRYER	12.0		
	5.0		FACP	1	20	9 – 10	20	1	VVT-8		6.0	
			SPARE	1	20	11 – 12	20	1	VVT-9			6.0
4.0			DESS. DRYER SULF. ACID TANK 1	1	20	13 – 14	20	1	PLC-1	5.0		
	5.0		ELEVATOR CONTROL PANEL	1	20	15 – 16	20	1	MENS H.C. HAND DRYER		12.0	
		2.0	CONTACTOR CO1	1	20	17 – 18	20	1	WOMENS H.C. HAND DRYER			12.0
2.0			CONTACTOR CO2	1	20	19 – 20	20	1	SUMP PUMP SSP-09-51	9.8		
	4.4		ROLL UP SHUTTER (1A, 1B)	1	20	21 – 22	20	1	SUMP PUMP SSP-09-53		9.8	
		8.8	ROLL UP SHUTTERS (1C,1D,1E,1F)	1	20	23 – 24	20	1	SLIDE GATE EAST			9.8
12.0			WOMANS HAND DRYER	1	20	25 – 26	20	1	RECIR. PUMP	–		
	3.0		EF-5 (SULFURIC ACID)	1	20	27 – 28	20	1	COMPRESSOR DRAIN VALVE		–	
		9.8	SLIDE GATE WEST	1	20	29 – 30	20	1	COMPRESSOR AIR DRYER			–
			SPARE	1	20	31 – 32	20	1	E.F. LAB	–		
			SPARE	1	20	33 – 34	20	1	E.F. KITCHEN		–	
			SPARE	1	20	35 – 36	20	1	SPARE			
			SPARE	1	20	37 – 38	50	3	PANEL 1LP3	14.0		
			SPARE	1	20	39 – 40					14.0	
			SPARE	1	20	41 – 42						14.0

TOTAL AMPS: BUS A 67.8 BUS B 67.2 BUS C 74.4 CONNECTED Kva 25.1

RATED VOLTAGE: ■ 120/208 ☐ 277/480 3 PHASE, 4 WIRE | BRANCH POLES ☐ 12 ☐ 20 ☐ 30 ■ 42
RATED AMPS: ■ 100 ☐ 225 ☐ 400 ☐ _____ | CABINET: ■ SURFACE ☐ FLUSH
NEUTRAL BUS ☐ 100% ■ 150% ☐ 200% | ■ GROUND BUS | ■ HINGED DOOR | ■ KEYED DOOR LATCH | LOCATION: 1ST FLOOR ELECTRICAL ROOM
■ CIRCUIT BREAKER (BOLT-IN) BRANCH DEVICES | ■ TVSS | ENCLOSURE TYPE ■ NEMA 1 ☐ NEMA 3R ☐ NEMA 4X ☐ _____
☐ MAIN LUGS ONLY | MAIN 100 AMPS ■ BREAKER | ☐ _____ TO BE GFI BREAKERS
PANELBOARD MUST BE RATED TO INTERRUPT A SHORT CIRCUIT ISC OF ____22,000 AMPS SYMMETRICAL.
APPROVED MF'RS. SQUARE D, GE, CUTLER-HAMMER, ALLEN-BRADLEY, SIEMANS | COPPER BUSSES | MAIN LUGS _____ SETS SIZE: _____

PANELBOARD SCHEDULE "2LP1"

BUS AMPS A	BUS AMPS B	BUS AMPS C	LOAD	POLES	AMPS	BUS A B C	AMPS	POLES	LOAD	BUS AMPS A	BUS AMPS B	BUS AMPS C
7.9			LIGHTING – DIRECTOR, CONFERENCE	1	20	1 – 2	20	1	RECEPTACLES – ASS. DIRECTOR	7.5		
	8.0		LIGHTING – AUTOCAD DRAFTER	1	20	3 – 4	20	1	RECEPTACLES – ASS. CITY ENGINEER		6.0	
		8.2	LIGHTING – ASS. DIRECTOR, CITY ENG.	1	20	5 – 6	20	1	RECEPTACLES – ADMIN ANALYST			6.0
6.6			LIGHTING – UTIL. ENG., ENGINEER	1	20	7 – 8	20	1	RECEPTACLES – ADMIN ANALYST	6.0		
	6.0		VVT-1	1	20	9 – 10	20	1	RECEPTACLES – UTIL. ENGINEER		6.0	
		6.0	LIGHTING – CITY ENG., ELEC., STAIR	1	20	11 – 12	20	1	RECEPTACLES – SECRETARY			6.0
7.6			LIGHTING – RECEPTION, RESTROOMS	1	20	13 – 14	20	1	RECEPTACLES – ENGINEER	7.5		
	6.0		VVT-2	1	20	15 – 16	20	1	RECEPTACLES – RECEPTION AREA		7.5	
		1.5	RECEPTACLES – ELEC. ROOM	1	20	17 – 18	20	1	RECEPTACLES – CITY ENGINEER			7.5
6.0			VVT-3	1	20	19 – 20	20	1	RECEPTACLES – AUTOCAD DRAFTER	7.5		
	4.4		ROLL UP SHUTTER (2A, 2B)	1	20	21 – 22	20	1	RECEPTACLES – DIRECTOR		7.5	
		8.8	ROLL UP SHUTTER (2C, 2D, 2E, 2F)	1	20	23 – 24	20	1	RECEPTACLES – CONFERENCE			6.0
			SPARE	1	20	25 – 26	20	1	FLOOR RECEPTACLES-CAD DRAFTER	6.0		
	6.0		VVT-4	1	20	27 – 28	20	1	RECEPTACLES – ENGINEER		6.0	
		12.0	WOMENS HAND DRYER	1	20	29 – 30	20	1	SPARE			
6.0			VVT-5	1	20	31 – 32	20	1	SPARE			
			SPARE	1	20	33 – 34	20	1	SPARE			
		12.0	MENS HAND DRYER	1	20	35 – 36	20	1	SPARE			
			SPARE	1	20	37 – 38	20	1	SPARE			
			SPARE	1	20	39 – 40	20	1	SPARE			
			SPARE	1	20	41 – 42	20	1	SPARE			

TOTAL AMPS: BUS A 68.6 BUS B 63.4 BUS C 74.0 CONNECTED Kva_24.7

RATED VOLTAGE: ■ 120/208 ☐ 277/480 3 PHASE, 4 WIRE | BRANCH POLES ☐ 12 ☐ 20 ☐ 30 ■ 42
RATED AMPS: ■ 100 ☐ 225 ☐ 400 ☐ _____ | CABINET: ■ SURFACE ☐ FLUSH
NEUTRAL BUS ☐ 100% ■ 150% ☐ 200% | ■ GROUND BUS | ■ HINGED DOOR | ■ KEYED DOOR LATCH | LOCATION: SECOND FLOOR ELECTRICAL ROOM
■ CIRCUIT BREAKER (BOLT-IN) BRANCH DEVICES | ■ TVSS | ENCLOSURE TYPE ■ NEMA 1 ☐ NEMA 3R ☐ NEMA 4X ☐ _____
☐ MAIN LUGS ONLY | MAIN 100 AMPS ■ BREAKER | ■ _____ * TO BE GFI BREAKERS
PANELBOARD MUST BE RATED TO INTERRUPT A SHORT CIRCUIT ISC OF ____22,000 AMPS SYMMETRICAL.
APPROVED MF'RS. SQUARE D, GE, CUTLER-HAMMER, ALLEN-BRADLEY, SIEMANS | COPPER BUSSES | MAIN LUGS _____ SETS SIZE: _____

PANELBOARD SCHEDULE "1IP1"

BUS AMPS A	BUS AMPS B	BUS AMPS C	LOAD	POLES	AMPS	BUS A B C	AMPS	POLES	LOAD	BUS AMPS A	BUS AMPS B	BUS AMPS C
9.8			FV-09-12	1	20	1 – 2	20	1	AIT-1045	1.0		
	9.8		FV-09-23	1	20	3 – 4	20	1	FIT 1312		1.0	
		9.8	FV-09-24	1	20	5 – 6	20	1	FIT-1114			1.0
3.0			ANTI/SUF. ACID BULK STORAGE PANEL	1	20	7 – 8	20	1	AIT-0932,0933,0934	3.0		
	9.8		SAMPLE PUMP P-09-18	1	20	9 – 10	20	1	START-UP VALVE C.P.		5.0	
		20.0	SUMP PUMPS SSP-10-95/96	1	30	11 – 12	20	1	AIT-0935,0936,0937,0938			4.0
20.0			SUMP PUMPS SSP-10-98/99	1	30	13 – 14	20	1	SPARE			
	9.8		FV-09-14	1	20	15 – 16	20	1	FIT-1312		1.0	
		1.0	CS-13-10	1	20	17 – 18	20	1	SPARE			
5.0			INSTRUMENTS MF TRAIN #1	1	20	19 – 20	20	1	SPARE			
	5.0		INSTRUMENTS MF TRAIN #2	1	20	21 – 22	20	1	SPARE			
		5.0	INSTRUMENTS MF TRAIN #3 (FUT)	1	20	23 – 24	20	1	SPARE			
5.0			INSTRUMENTS RO TRAIN #4 (FUT)	1	20	25 – 26	20	1	SPARE			
	5.0		INSTRUMENTS RO TRAIN #5 (FUT)	1	20	27 – 28	20	1	SPARE			
		5.0	FCV-09-05	1	20	29 – 30	20	1	SPARE			
1.0			FIT-0900, NORTH VAULT YC-61	1	20	31 – 32	20	1	SPARE			
	1.0		LIT-1015	1	20	33 – 34	20	1	SPARE			
		1.0	LIT-1016	1	20	35 – 36	20	1	SPARE			
–			SAMPLE PUMP-0938	1	20	37 – 38	20	1	SPARE			
			SPARE	1	20	39 – 40	20	1	SPARE			
			SPARE	1	20	41 – 42	20	1	SPARE			

TOTAL CONNECTED AMPS: BUS A 47.8 BUS B 47.4 BUS C 46.8 CONNECTED Kva 17.0

RATED VOLTAGE: ■ 120/208 ☐ 277/480 3 PHASE, 4 WIRE | BRANCH POLES ☐ 12 ☐ 20 ☐ 30 ■ 42
RATED AMPS: ■ 100 ☐ 225 ☐ 400 ☐ _____ | CABINET: ■ SURFACE ☐ FLUSH
NEUTRAL BUS ☐ 100% ■ 150% ☐ 200% | ■ GROUND BUS | ■ HINGED DOOR | ■ KEYED DOOR LATCH | LOCATION: MF ROOM
■ CIRCUIT BREAKER (BOLT-IN) BRANCH DEVICES | ■ TVSS | ENCLOSURE TYPE ☐ NEMA 1 ☐ NEMA 3R ■ NEMA 4X ☐ _____
☐ MAIN LUGS ONLY | MAIN 100 AMPS ■ BREAKER | ☐ _____ TO BE GFI BREAKERS
PANELBOARD MUST BE RATED TO INTERRUPT A SHORT CIRCUIT ISC OF ____22,000 AMPS SYMMETRICAL.
APPROVED MF'RS. SQUARE D, GE, CUTLER-HAMMER, ALLEN-BRADLEY, SIEMANS | COPPER BUSSES | MAIN LUGS _____ SETS SIZE: _____

RECORD DRAWINGS

REVISIONS DRAWN BY: E. SMITH DATE: DEC. 2007

THESE RECORD DRAWINGS HAVE BEEN PREPARED, IN PART, ON THE BASIS OF INFORMATION COMPILED BY OTHERS, AND MAY NOT REPRESENT THE EXACT LOCAION, TYPE OF COMPONENT, NOR MANNER OF CONSTRUCTION. THE ENGINEER, OR THE ENGINEER'S REPRESENTATIVE, HAS MADE PERIODIC VISITS TO THE SITE TO OBSERVE THE PROGRESS OF THE EXECUTED WORK. AND HEREBY CERTIFIES, BASED UPON THE KNOWLEDGE DERIVED THERE-FROM AND IN ACCORDANCE WITH THE DEPARTMENT OF PROFESSIONAL REGULATION RULE 21-1-1B.011.(4) THAT THESE RECORD DRAWINGS ACCURATELY REFLECT THE WORK PERFORMED.

NO.	DATE	ISSUED FOR	BY
2	01/08	RECORD DRAWINGS	ES
1	05/04	BID SET	ML

DESIGNED M.E.L.
DRAWN M.E.L.
CHECKED P.F.H.
PROJ. ENGR. P.A.D.

HILLERS ELECTRICAL ENGINEERING, INC.
23257 STATE ROAD 7, SUITE 100
BOCA RATON, FLORIDA 33428
(561) 451-9165
(561) 451-4886 FAX
LICENSE NO: EB 0006877
MARK E. LUTHER P.E.
No. 48801

HAZEN AND SAWYER
Environmental Engineers & Scientists
4000 Hollywood Boulevard, Suite 750N
Hollywood, Florida 33021
Certificate of Authorization Number: 2771

SCALE: NONE

CONTRACT: 40406
CLIENTS PROJECT:
ENGINEERS PROJECT: 40406
CAD REFERENCE: 40406E27.DWG

CITY OF HALLANDALE BEACH
UTILITIES DEPARTMENT

6 MGD MEMBRANE SOFTENING W.T.P.

SCHEDULES
SHEET 2

DATE: JANUARY 2008
SHEET: 137 OF 162
DRAWING: E-27

9/28/2001/3:46 P.M. – 42 HLND – H:\40406\FIG\TECHMEMOA\40406FIG4-2.dwg – XREFS: – PS 1=1

PANELBOARD SCHEDULE "3LP1"

BUS AMPS A	BUS AMPS B	BUS AMPS C	LOAD	POLES	AMPS	BUS A B C	AMPS	POLES	LOAD	BUS AMPS A	BUS AMPS B	BUS AMPS C
9.3			LIGHTING – SWITCHGEAR ROOM	1	20	1 – 2	20	1	RECEPTACLE – SWITCHGEAR ROOM	4.5		
	8.6		LIGHTING – GENERATOR ROOM	1	20	3 – 4	20	1	RECEPTACLE – GENERATOR ROOM		4.5	
		2.0	EMERGENCY BREAK GLASS STATION	1	20	5 – 6	20	1	EXIT LIGHTS			
3.0			GEN #1 BATTERY CHARGER	1	20	7 – 8	20	1	GEN #1 DAY TANK CONTROL PNL (FUT)			
			SPARE	1	30	9 – 10	20	1	EX. FAN GEN ROOM		7.2	
		38.0	GEN #1 JACKET WATER HTR	2	50	11 – 12	20	1	SUMP PUMP 04-26			9.8
38.0						13 – 14	20	1	SPARE			
	38.0		GEN #2 JACKET WATER HTR (FUT)	2	50	15 – 16	20	1	AIT-0422		1.0	
		38.0				17 – 18	20	1	SPARE			
15.0			GEN #2 DAY TANK CONTROL PNL (FUT)	1	20	19 – 20	15	1	TANK FILL PUMP MOTOR 1			
	3.0		GEN #2 BATTERY CHARGER (FUT)	1	20	21 – 22	15	1	TANK FILL PUMP MOTOR 2			
		1.6	LIGHTING – EXTERIOR	1	20	23 – 24	15	1	TANK FILL PUMP MOTOR 3			
5.0			PLC 2	1	20	25 – 26	15	1	TANK FILL PUMP MOTOR 4			
	1.0		LIT-0804	1	20	27 – 28	20	1	SPARE			
		5.4	AHU-4	2	15	29 – 30	20	1	SPARE			
5.4						31 – 32	20	1	SPARE			
	2.5		LIGHTING CONTACTOR CO3	1	20	33 – 34	20	1	SPARE			
			SPARE	1	20	35 – 36	20	1	SPARE			
			SPARE	1	20	37 – 38	50	3	SUB PANEL 3LP2	22.8		
			SPARE	1	20	39 – 40					27.1	
			SPARE	1	20	41 – 42						26.8

TOTAL AMPS: BUS A 107.0 BUS B 106.5 BUS C 107.4 CONNECTED Kva 38.5

RATED VOLTAGE: ■ 120/208 □ 277/480 3 PHASE, 4 WIRE | BRANCH POLES □ 12 □ 20 □ 30 ■ 42
RATED AMPS: □ 100 ■ 225 □ 400 □ ______ | CABINET: ■ SURFACE □ FLUSH
NEUTRAL BUS □ 100% ■ 150% □ 200% | ■ GROUND BUS | ■ HINGED DOOR | ■ KEYED DOOR LATCH | LOCATION: SWITCHGEAR ROOM
■ CIRCUIT BREAKER (BOLT-IN) BRANCH DEVICES | ■ TVSS | ENCLOSURE TYPE ■ NEMA 1 □ NEMA 3R □ NEMA 4X □ ________
□ MAIN LUGS ONLY | MAIN 150 AMPS ■ BREAKER | □ __________ TO BE GFI BREAKERS
PANELBOARD MUST BE RATED TO INTERRUPT A SHORT CIRCUIT ISC OF ____10,000 AMPS SYMMETRICAL.
APPROVED MF'RS. SQUARE D, GE, CUTLER-HAMMER, ALLEN-BRADLEY, SIEMANS | COPPER BUSSES | MAIN LUGS ________ SETS SIZE: _________

PANELBOARD SCHEDULE "3PP1"

BUS AMPS A	BUS AMPS B	BUS AMPS C	LOAD	POLES	AMPS	BUS A B C	AMPS	POLES	LOAD	BUS AMPS A	BUS AMPS B	BUS AMPS C
1.8			VALVE FV-11-15	3	20	1 – 2	20	3	SPARE			
	1.8					3 – 4						
		1.8				5 – 6						
1.8			VALVE FV-11-16	3	20	7 – 8	20	3	SPARE			
	1.8					9 – 10						
		1.8				11 – 12						
1.8			VALVE FV-11-17 (FUTURE)	3	20	13 – 14	20	3	SPARE			
	1.8					15 – 16						
		1.8				17 – 18						
1.8			VALVE MOV-13-03	3	20	19 – 20	20	3	SPARE			
	1.8					21 – 22						
		1.8				23 – 24						
1.8			VALVE MOV-13-04	3	20	25 – 26	20	3	SPARE			
	1.8					27 – 28						
		1.8				29 – 30						
1.8			VALVE MOV-13-05 (FUTURE)	3	20	31 – 32	20	3	SPARE			
	1.8					33 – 34						
		1.8				35 – 36						
1.8			VALVE FCV-13-06	3	20	37 – 38	20	3	SPARE			
	1.8					39 – 40						
		1.8				41 – 42						

TOTAL CONNECTED AMPS: BUS A 12.6 BUS B 12.6 BUS C 12.6 CONNECTED Kva 10.5 TOTAL DEMAND AMPS: BUS A 6.3 BUS B 6.3 BUS C 6.3 DEMAND Kva 5.3

RATED VOLTAGE: □ 120/208 ■ 480 3 PHASE, 3 WIRE | BRANCH POLES □ 12 □ 20 □ 30 ■ 42
RATED AMPS: ■ 100 □ 225 □ 400 □ ______ | CABINET: ■ SURFACE □ FLUSH
NEUTRAL BUS ■ 100% □ 150% □ 200% | ■ GROUND BUS | ■ HINGED DOOR | □ KEYED DOOR LATCH | LOCATION: GENERATOR BUILDING
■ CIRCUIT BREAKER (BOLT-IN) BRANCH DEVICES | ■ TVSS | ENCLOSURE TYPE ■ NEMA 1 □ NEMA 3R □ NEMA 4X □ ________
■ MAIN LUGS ONLY | MAIN___ AMPS □ BREAKER | □ __________ TO BE GFI BREAKERS
PANELBOARD MUST BE RATED TO INTERRUPT A SHORT CIRCUIT ISC OF ____65,000 AMPS SYMMETRICAL.
APPROVED MF'RS. SQUARE D, GE, CUTLER-HAMMER, ALLEN-BRADLEY, SIEMANS | COPPER BUSSES | MAIN LUGS ________ SETS SIZE: _________

PANELBOARD SCHEDULE "3LP2"

BUS AMPS A	BUS AMPS B	BUS AMPS C	LOAD	POLES	AMPS	BUS A B C	AMPS	POLES	LOAD	BUS AMPS A	BUS AMPS B	BUS AMPS C
8.0			LIGHTING – DEGASIFIER UPPER LEVEL	1	20	1 – 2	20	1	RECEPTACLE – DEGASIFIER OUTSIDE	6.0		
	4.5		RECEPTACLE-DEGASIFIER UPPER LEVEL	1	20	3 – 4	20	1	LIGHTING – CAUSTIC		6.0	
		5.0	RIO 2.1	1	20	5 – 6	20	1	LIGHTING – SEQUESTERANT ROOM			8.0
1.0			LIT-1118	1	20	7 – 8	20	1	LIGHTING CONTACTOR CO4	2.0		
	9.8		SUMP PUMP SSP-04-24	1	20	9 – 10	20	1	SPARE			
		1.0	AIT-4022	1	20	11 – 12	20	1	SODIUM HYD/SEQ BULK STORAGE PANEL			3.0
9.8			FV-11-33	1	20	13 – 14	20	1	EF-10	5.8		
	9.8		FV-11-34	1	20	15 – 16	20	1	EF-11		5.8	
		9.8	SAMPLE PUMP P-04-10	1	20	17 – 18	20	1	SPARE			
9.8			FV-11-10	1	20	19 – 20	20	1	SPARE			
	1.0		AIT-4021	1	20	21 – 22	20	1	SPARE			
		9.8	FV-11-11	1	20	23 – 24	20	1	SPARE			
			SPARE	1	20	25 – 26	20	1	SPARE			
			SPARE	1	20	27 – 28	20	1	SPARE			
			SPARE	1	20	29 – 30	20	1	SPARE			

TOTAL AMPS: BUS A_42.4 BUS B_36.9 BUS C_36.6 CONNECTED Kva_13.9 TOTAL DEMAND AMPS: BUS A_22.8 BUS B_27.1 BUS C_26.8 DEMAND Kva_9.2

RATED VOLTAGE: ■ 120/208 □ 480 3 PHASE, 3 WIRE | BRANCH POLES □ 12 □ 20 ■ 30 □ 42
RATED AMPS: ■ 100 □ 225 □ 400 □ ______ | CABINET: ■ SURFACE □ FLUSH
NEUTRAL BUS □ 100% ■ 150% □ 200% | ■ GROUND BUS | ■ HINGED DOOR | ■ KEYED DOOR LATCH | LOCATION: DEGASIFIER AREA
■ CIRCUIT BREAKER (BOLT-IN) BRANCH DEVICES | ■ TVSS | ENCLOSURE TYPE □ NEMA 1 □ NEMA 3R ■ NEMA 4X □ ________
□ MAIN LUGS ONLY | MAIN 50 AMPS ■ BREAKER | □ __________ TO BE GFI BREAKERS
PANELBOARD MUST BE RATED TO INTERRUPT A SHORT CIRCUIT ISC OF ____10,000 AMPS SYMMETRICAL.
APPROVED MF'RS. SQUARE D, GE, CUTLER-HAMMER, ALLEN-BRADLEY, SIEMANS | COPPER BUSSES | MAIN LUGS ________ SETS SIZE: _________

MINI POWER ZONE SCHEDULE "MPZ"

BUS AMPS A	BUS AMPS B	BUS AMPS C	LOAD	POLES	AMPS	BUS A B C	AMPS	POLES	LOAD	BUS AMPS A	BUS AMPS B	BUS AMPS C
9.8			P-13-05	3	20	1 – 2	20	3	SURGE SUPPRESSOR			
	9.8					3 – 4						
		9.8				5 – 6						
9.8			P-13-06	3	20	7 – 8	20	1	SPARE			
	9.8					9 – 10	20	1	SPARE			
		9.8				11 – 12	20	1	SPARE			

TOTAL CONNECTED AMPS: BUS A 9.8 BUS B 9.8 BUS C 0.0 CONNECTED Kva 2.4

RATED VOLTAGE: ■ 120/208 □ 277/480 3 PHASE, 4 WIRE | BRANCH POLES ■ 12 □ 20 □ 30 □ 42 | TRANSFORMER SIZE (KVA): □ 15 ■ 22.5 □ 30
RATED AMPS: ■ 100 □ 225 □ 400 □ ______ | CABINET: ■ SURFACE □ FLUSH | PRIMARY VOLTAGE: ■ 480V
NEUTRAL BUS ■ 100% □ 150% □ 200% | ■ GROUND BUS | ■ HINGED DOOR | ■ KEYED DOOR LATCH | LOCATION:
■ CIRCUIT BREAKER (BOLT-IN) BRANCH DEVICES | ■ TVSS | ENCLOSURE TYPE □ NEMA 1 □ NEMA 3R ■ NEMA 4X □ ________
□ MAIN LUGS ONLY | MAIN 70 AMPS ■ BREAKER | □ __________ TO BE GFI BREAKERS
PANELBOARD MUST BE RATED TO INTERRUPT A SHORT CIRCUIT ISC OF ____10,000 AMPS SYMMETRICAL.
APPROVED MF'RS. SQUARE D, GE, CUTLER-HAMMER, ALLEN-BRADLEY, SIEMANS | COPPER BUSSES | MAIN LUGS ________ SETS SIZE: _________

PANELBOARD SCHEDULE 1LP3

BUS AMPS A	BUS AMPS B	BUS AMPS C	LOAD	POLES	AMPS	BUS A B C	AMPS	POLES	LOAD	BUS AMPS A	BUS AMPS B	BUS AMPS C
			SPARE	1	20	1 – 2	20	1	SPARE			
			SPARE	1	20	3 – 4	20	1	SPARE			
			SPARE	1	20	5 – 6	20	1	SPARE			
			SPARE	1	20	7 – 8	20	1	SPARE			
			SPARE	1	20	9 – 10	20	1	SPARE			
			SPARE	1	20	11 – 12	20	1	SPARE			

TOTAL CONNECTED AMPS: BUS A 0.0 BUS B 0.0 BUS C 0.0 CONNECTED Kva 2.4

RATED VOLTAGE: ■ 120/208 □ 277/480 3 PHASE, 4 WIRE | BRANCH POLES ■ 12 □ 20 □ 30 □ 42
RATED AMPS: ■ 100 □ 225 □ 400 □ ______ | CABINET: □ SURFACE ■ FLUSH
NEUTRAL BUS □ 100% ■ 150% □ 200% | ■ GROUND BUS | ■ HINGED DOOR | ■ KEYED DOOR LATCH | LOCATION: SERVER ROOM
■ CIRCUIT BREAKER (BOLT-IN) BRANCH DEVICES | ■ TVSS | ENCLOSURE TYPE ■ NEMA 1 □ NEMA 3R □ NEMA 4X □ ________
□ MAIN LUGS ONLY | MAIN 50 AMPS ■ BREAKER | □ __________ TO BE GFI BREAKERS
PANELBOARD MUST BE RATED TO INTERRUPT A SHORT CIRCUIT ISC OF ____10,000 AMPS SYMMETRICAL.
APPROVED MF'RS. SQUARE D, GE, CUTLER-HAMMER, ALLEN-BRADLEY, SIEMANS | COPPER BUSSES | MAIN LUGS ________ SETS SIZE: _________

NOTE: PANELBOARD IS FOR FUTURE NETWORK EQUIPMENT

RECORD DRAWINGS

REVISIONS DRAWN BY: E. SMITH DATE: DEC. 2007

THESE RECORD DRAWINGS HAVE BEEN PREPARED, IN PART, ON THE BASIS OF INFORMATION COMPILED BY OTHERS, AND MAY NOT REPRESENT THE EXACT LOCAION, TYPE OF COMPONENT, NOR MANNER OF CONSTRUCTION. THE ENGINEER, OR THE ENGINEER'S REPRESENTATIVE, HAS MADE PERIODIC VISITS TO THE SITE TO OBSERVE THE PROGRESS OF THE EXECUTED WORK. AND HEREBY CERTIFIES, BASED UPON THE KNOWLEDGE DERIVED THERE-FROM AND IN ACCORDANCE WITH THE DEPARTMENT OF PROFESSIONAL REGULATION RULE 21-1-1B.011.(4) THAT THESE RECORD DRAWINGS ACCURATELY REFLECT THE WORK PERFORMED.

NO.	DATE	ISSUED FOR	BY
3	01/08	RECORD DRAWINGS	ES
2	11/05	ADD EXHAUST FANS	SFC
1	05/04	BID SET	ML

DESIGNED M.E.L.
DRAWN M.E.L.
CHECKED P.F.H.
PROJ. ENGR. P.A.D.

HILLERS ELECTRICAL ENGINEERING, INC.
23257 STATE ROAD 7, SUITE 100
BOCA RATON, FLORIDA 33428
(561) 451-9165
(561) 451-4886 FAX
LICENSE NO: EB 0006877
MARK E. LUTHER P.E.
No. 48801

HAZEN AND SAWYER
Environmental Engineers & Scientists
4000 Hollywood Boulevard, Suite 750N
Hollywood, Florida 33021
Certificate of Authorization Number: 2771

SCALE: NONE

CONTRACT: 40406
CLIENTS PROJECT:
ENGINEERS PROJECT: 40406
CAD REFERENCE: 40406E28.DWG

CITY OF HALLANDALE BEACH City of Choice

CITY OF HALLANDALE BEACH
UTILITIES DEPARTMENT

6 MGD MEMBRANE SOFTENING W.T.P.

SCHEDULES

SHEET 3

DATE: JANUARY 2008
SHEET: 138 OF 162
DRAWING: E-28

9/28/2001/3:46 P.M. – 42 HLWD – H:\40406\FIG\TECHMEMO4\40406FIG4-2.dwg – XREFS: – PS 1=1

LUMINAIRE SCHEDULE

TYPE	VOLTS	DESCRIPTION	MANUFACTURER	CATALOG NO	LAMPS	MOUNTING	REMARKS
1	120	2-32W FLUORESCENT WRAPAROUND	DAYBRITE	OWN-232-1/2EB-120	2-32T8/35K FLUOR	SURFACE	
2	120	LOW PROFILE WALL MOUNTED FIXTURE	LUMINAIRE	DWL-512-2PL13-OP-BZ	2PL13 FLUOR	SURFACE	LOW PROFILE
3	120	COMPACT EMERGENCY LIGHTING UNIT	DAYBRITE	CA-6	2-5W HALOGEN	SURFACE	
4	120	WALLPACK SERIES	DAYBRITE	WLM-70-S-12-FSF	70W HPS	WALL	
5	120	EXIT LIGHT, EZ-SNAP LED SERIES THERMOPLASTIC CONSTRUCTION.	DAYBRITE	CXL-3-R-W-EM	LED LAMPS	SURFACE	SINGLE FACE
6	120	6" OPEN DOWNLIGHT ENCASED & POTTED CLASS "P" HPF ELECTRONIC BALLAST, SELF TRIM REFLECTOR CLEAR ALZAK CONE	CAPRI COMPACT FLUOR.	CM6-F226-SI-FS-H65-BH	PL26/35K FLUOR	RECESSED	
7 & 7R	120	ENCLOSED POLYCARBONATE REFRACTOR U.L. LISTED, SUITABLE FOR DAMP LOCATION DIE CAST ALUM. HOUSING	DAYBRITE	LBN-400-MT-CRA LBN-400M-MT-Q-CRA	400W METAL HALIDE	PENDANT	MOUNT BOTTOM OF FIXTURE AT 26' AFF. 7R - 150W QUARTZ RESTRIKE LAMP
8	120	POST MOUNT LUMINAIRE	G.E.	P17M15S1H1AMN3	1-150W HPS	POLE	10' MOUNTING HEIGHT
9	120	2-32W PARABOLIC FLUORESCENT 105 CELL	DAYBRITE	2DGS-232-105-FL-120-1/2EB	2-32T8/35K FLUOR	RECESSED	105 CELL PARABOLIC
10	120	3-32W PARABOLIC FLUORESCENT 105 CELL	DAYBRITE	2DGS-332-105-FL-120-1/2EB	3-32T8/35K FLUOR	RECESSED	105 CELL PARABOLIC
11	120	ALL ALUM. HOUSING WITH GUARD	DAYBRITE	VIS-150-I-12-C	150W INCAND	WALL	ELEVATOR PIT LIGHT
12	120	WALL MOUNTED DOWN LIGHT	MCPHILBEN	3A-361	50W HPS	SURFACE	SEE ARCH DETAILS FOR MOUNTING DETAIL
13	120	6" OPEN DOWNLIGHT ENCASED & POTTED CLASS "P" HPF ELECTRONIC BALLAST, SELF TRIM REFLECTOR CLEAR ALZAK CONE	CAPRI	HS11-T043	50W HPS	RECESSED	
14	120	DUST AND MOISTURE TIGHT FLUORESCENT PLASTIC HOUSING, CORROSION RESISTANT	DAYBRITE	VTPT332-TG	3-32T8/35K FLUOR	SUSPENDED	SUITABLE FOR DAMP LOCATION. SUSPEND 17' AFF.
15	120	3-32W INDUSTRIAL FLOURESCENT	DAYBRITE	IA232-120-1/2EB-FKR173	3-32T8/35K FLUOR	SURFACE	PROVIDE WIRE GUARD
16	120	6" DOWNLIGHT ENCASED & POTTED CLASS "P" HPF ELECTRONIC BALLAST, SHOWER LIGHT WITH OPAL LEXAN	CAPRI COMPACT FLUOR.	PLO7/120HPF-PSH17	PL-13W FLUOR	RECESSED	SUITABLE FOR DAMP LOCATION SHOWER LIGHT
17	120	EMERGENCY LIGHTING UNIT PLASTIC HOUSING, CORROSION RESISTANT	CHLORIDE	4X-12-N-50-Z	2-7W	SURFACE	SUITABLE FOR DAMP LOCATION NEMA 4X
18	120	EXIT LIGHT, NEMA 4X SERIES THERMOPLASTIC CONSTRUCTION.	CHLORIDE	NSP-P-I-RW-1-T	2-PL5W FLUOR	SURFACE	SUITABLE FOR DAMP LOCATION NEMA 4X
19	120	FLOUR. STRIP LIGHT	DAYBRITE	T232-1/2EB-120	3-32T8/35K FLUOR	SURFACE	MOUNTED IN COVE OF CEILING
20	120	WALL MOUNTED FLOOD LIGHT	LITHONIA	TFL100STA2120TFWPB	100W HPS	WALL	

MANHOLE/PULLBOX SCHEDULE

TAG NO.	DESCRIPTION	INTERNAL DIMENSIONS H x W x D	REMARKS	DETAIL
EMH-1	480V POWER	60" X 60" X 60"		34
EMH-2	480V POWER	60" X 60" X 60"		34
EMH-3	480V POWER	48" X 48" X 48"		34
EMH-4	480V POWER	48" X 48" X 48"		34
EMH-5	480V POWER	36" X 36" X 36"		34
EMH-6	480V POWER	36" X 36" X 36"		34
SMH-1	SIGNAL/CONTROL	48" X 48" X 48"		34
SMH-2	SIGNAL/CONTROL	48" X 48" X 48"		34
SMH-3	SIGNAL/CONTROL	36" X 36" X 36"		34
SMH-4	SIGNAL/CONTROL	36" X 36" X 36"		34
SMH-5	SIGNAL/CONTROL	36" X 36" X 36"		34
SMH-6	TELEPHONE	36" X 36" X 36"		

RECORD DRAWINGS

REVISIONS DRAWN BY: E. SMITH DATE: DEC. 2007

THESE RECORD DRAWINGS HAVE BEEN PREPARED, IN PART, ON THE BASIS OF INFORMATION COMPILED BY OTHERS, AND MAY NOT REPRESENT THE EXACT LOCAION, TYPE OF COMPONENT, NOR MANNER OF CONSTRUCTION. THE ENGINEER, OR THE ENGINEER'S REPRESENTATIVE, HAS MADE PERIODIC VISITS TO THE SITE TO OBSERVE THE PROGRESS OF THE EXECUTED WORK. AND HEREBY CERTIFIES, BASED UPON THE KNOWLEDGE DERIVED THERE-FROM AND IN ACCORDANCE WITH THE DEPARTMENT OF PROFESSIONAL REGULATION RULE 21-1-1B.011.(4) THAT THESE RECORD DRAWINGS ACCURATELY REFLECT THE WORK PERFORMED.

NO.	DATE	ISSUED FOR	BY
2	01/08	RECORD DRAWINGS	ES
1	10/03	BID SET	ML

DESIGNED M.E.L.
DRAWN M.E.L.
CHECKED P.F.H.
PROJ. ENGR. P.A.D.

HILLERS ELECTRICAL ENGINEERING, INC.
23257 STATE ROAD 7, SUITE 100
BOCA RATON, FLORIDA 33428
(561) 451-9165
(561) 451-4886 FAX
LICENSE NO: EB 0006877
MARK E. LUTHER P.E.
No. 48801

HAZEN AND SAWYER
Environmental Engineers & Scientists
4000 Hollywood Boulevard, Suite 750N
Hollywood, Florida 33021
Certificate of Authorization Number: 2771

SCALE NONE

CONTRACT: 40406
CLIENTS PROJECT:
ENGINEERS PROJECT: 40406
CAD REFERENCE: 40406E29.DWG

CITY OF HALLANDALE BEACH
UTILITIES DEPARTMENT

6 MGD MEMBRANE SOFTENING W.T.P.

SCHEDULES

SHEET 4

DATE: JANUARY 2008
SHEET: 139 OF 162
DRAWING: E-29

9/28/2001 3:46 P.M. - 42 HLWD - H:\40406\FIG\TECHMEMO\40406FIG4-2.dwg - XREFS: - PS 1=1

YARD CONDUIT SCHEDULE

CKT I.D.	FROM	TO	REMARKS
YC1	FPL POWER POLE	PAD MOUNTED XFMR	PRIMARY POWER-COORDINATE WITH UTILITY
YC2	FPL POWER POLE	FUTURE PAD MOUNTED XFMR	PRIMARY POWER-COORDINATE WITH UTILITY
YC3	PAD MOUNTED XFMR	SWGR MF-1	POWER
YC4	FUTURE PAD MOUNTED XFMR	FUTURE SWGR MF-2	POWER; CONDUIT ONLY, NOTE 1,2
YC5	SWGR MF-1	SWBD SB-1	POWER-VIA EMH-1
YC6	FUTURE SWGR MF-2	FUTURE SWBD SB-2	POWER-VIA EMH-1; CONDUIT ONLY, NOTE 1,2
YC7	FUTURE SWBD SB-2	FUTURE VFD RO PUMP 4	POWER-VIA EMH-1; CONDUIT ONLY, NOTE 1,2
YC8	FUTURE VFD RO PUMP 4	RO PUMP 4	POWER-VIA EMH-1; CONDUIT ONLY, NOTE 1,2
YC9	FUTURE VFD RO PUMP 4	RO PUMP 4	CONTROL-VIA EMH-1;CONDUIT ONLY, NOTE 1,2
YC10	FUTURE SWBD SB-2	FUTURE VFD RO PUMP 5	POWER-VIA EMH-1; CONDUIT ONLY, NOTE 1,2
YC11	FUTURE VFD RO PUMP 5	RO PUMP 5	POWER-VIA EMH-1; CONDUIT ONLY, NOTE 1,2
YC12	FUTURE VFD RO PUMP 5	RO PUMP 5	CONTROL-VIA EMH-1;CONDUIT ONLY NOTE 1,2
YC13	RO BLDG SERVER ROOM	PLC 2	FIBER OPTIC-VIA EMH-1
YC14	TELEPHONE BACKBOARD	GENERATOR BLDG	TELEPHONE-VIA SMH-6
YC15	FIRE ALARM C.P.	GENERATOR BLDG	FIRE ALARM-VIA SMH-6
YC16	FIRE ALARM C.P.	GENERATOR BLDG	FIRE ALARM-VIA SMH-6
YC17	FIRST FLOOR SERVER ROOM	BLDG EXTERIOR	CONDUIT ONLY, NOTES 1,3. STUB 5' AND CAP
YC18	SWGR MF-1	EX. LIME PLANT MCC 2	POWER-VIA EMH-2
YC19	TELEPHONE BACKBOARD	EX. LIME PLANT TELE. BOARD	TELEPHONE-VIA SMH-2, SMH-3
YC20	RO BLDG SERVER ROOM	PLC 3	FIBER OPTIC-VIA SMH-2, SMH-3
YC21	PANEL 3LP1	PANEL 3LP2	POWER
YC22	MCC-1	DEGASIFIER BLOWER #1	POWER
YC23	MCC-1	DEGASIFIER BLOWER #1	CONTROL
YC24	MCC-1	DEGASIFIER BLOWER #2	POWER
YC25	MCC-1	DEGASIFIER BLOWER #2	CONTROL
YC26	MCC-1	FUT. DEGASIFIER BLOWER #3	POWER; CONDUIT ONLY, NOTE 1,2
YC27	MCC-1	FUT. DEGASIFIER BLOWER #3	CONTROL; CONDUIT ONLY, NOTE 1,2
YC28	MCC-1	SODIUM HYDROXIDE C.P.	POWER
YC29	MCC-1	SEQUESTERANT C.P.	POWER
YC30	PLC-2	RIO-2.1	FIBER OPTIC
YC31	PANEL 3PP1	FV-11-15	POWER
YC32	PANEL 3PP1	FV-11-16	POWER
YC33	PANEL 3PP1	FUTURE FV-11-17	POWER; CONDUIT ONLY, NOTE 1,2
YC34	FIRE ALARM C.P.	DEGASIFIER STRUCTURE	FIRE ALARM-VIA SMH-2
YC35	FIRE ALARM C.P.	DEGASIFIER STRUCTURE	FIRE ALARM-VIA SMH-2
YC36	VFD CONCENTRATE PUMP #1	CONCENTRATE PUMP #1	POWER
YC37	VFD CONCENTRATE PUMP #1	CONCENTRATE PUMP #1	CONTROL
YC38	VFD CONCENTRATE PUMP #2	CONCENTRATE PUMP #2	POWER
YC39	VFD CONCENTRATE PUMP #2	CONCENTRATE PUMP #2	CONTROL
YC40	FUT. VFD CONCEN. PUMP #3	FUT. CONCEN. PUMP #3	POWER; CONDUIT ONLY, NOTE 1,2
YC41	FUT. VFD CONCEN. PUMP #3	FUT. CONCEN. PUMP #3	CONTROL; CONDUIT ONLY, NOTE 1,2
YC42	PANEL 3PP1	MOV-13-03	POWER
YC43	PANEL 3PP1	MOV-13-04	POWER
YC44	PANEL 3PP1	FUTURE MOV-13-05	POWER; CONDUIT ONLY, NOTE 1,2
YC45	PANEL 3PP1	FCV-13-06	POWER
YC46	PLC-2	FCV-13-06	CONTROL
YC47	PLC-2	PIT-1318	SIGNAL
YC48	MCC-1	MPZ @ MONITORING WELL	POWER-VIA EMH-1, EMH-5, EMH-6
YC49	PLC-2	PIT-1313	SIGNAL-VIA SMH-1, SMH-4, SMH-5
YC50	PLC-2	PIT-1314	SIGNAL-VIA SMH-1, SMH-4, SMH-5
YC51	PLC-2	PIT-1315	SIGNAL-VIA SMH-1, SMH-4, SMH-5
YC52	PANEL 3LP1	LIT-804	POWER-VIA EMH-2
YC53	PLC-2	LIT-804	SIGNAL-VIA SMH-3
YC54	PLC-2	LSH-804	SIGNAL-VIA SMH-3
YC55	PLC-2	LSH-807	SIGNAL-VIA SMH-3
YC56	PANEL 1PP2	FCV-09-04	POWER
YC57	PLC-1	FCV-09-04	CONTROL
YC58	PLC-1	FCV-09-04	SIGNAL
YC59	PANEL 1LP2	SUMP PUMP SSP-09-53	POWER
YC60	PLC-1	SUMP PUMP SSP-09-53	CONTROL
YC61	PANEL 1IP1	FIT-0900	POWER
YC62	PLC-1	FIT-0900	SIGNAL
YC63	PANEL 1LP2	SUMP PUMP SSP-09-51	POWER
YC64	PLC-1	SUMP PUMP SSP-09-51	CONTROL
YC65	PANEL 3LP1	SUMP PUMP SSP-04-26	POWER
YC66	PLC-2	SUMP PUMP SSP-04-26	CONTROL

YARD CONDUIT SCHEDULE

CKT I.D.	FROM	TO	REMARKS
YC67	EX. LIME PLANT MCC-2	EX. BROWARD CO. VALVE	POWER-VIA EMH-3, EMH-4
YC68	EX. LIME PLANT MCC-2	EX. WELL #3	POWER-VIA EMH-3, EMH-4
YC69	EX. LIME PLANT MCC-2	EX. WELL #5	POWER-VIA EMH-3, EMH-4
YC70	PANEL 1LP2	SLIDE GATE EAST	POWER
YC71	PANEL 1LP2	SLIDE GATE WEST	POWER
YC72	COMMUNICATIONS BACKBOARD	CABLE TV DEMARCATION	CABLE TV. COORD. EXACT LOCATION W/UTILITY.
YC73	FPL LOAD CONTROL BOX	PLC 2	LOAD CONTROL TRIP CIRCUIT
YC74	FPL LOAD CONTROL BOX	PLC 2	LOAD CONTROL ALARM CIRCUIT
YC75			
YC76			
YC77			
YC78			
YC79			
YC80			
YC81			
YC82			
YC83			
YC84			
YC85			
YC86			
YC87			
YC88			
YC89			
YC90			
YC91			
YC92			
YC93			
YC94			
YC95			
YC96			
YC97			
YC98			
YC99			

CONDUIT SCHEDULE

CKT I.D.	FROM	TO	CONDUITS	REMARKS
YC100	SWGR MF-1	EMH-1	2-4"	NOTES 1,2
YC101	EMH-1	MEM. BLDG. ELEC ROOM	2-4"	NOTES 1,2
YC102	GENERATOR BLDG.	SMH-6		1-2"C SPARE, 1-2"C FPL ALARM CKT
YC103	EX. LIME PLANT MCC 2	EMH-3	2-2"	NOTE 1
YC104	SMH-6	MEM. BLDG.SERVER ROOM		1-2"C SPARE, 1-2"C FPL ALARM CKT
YC105	GENERATOR BLDG.	EMH-2	2-4"	NOTES 1,2
YC106	GENERATOR BLDG.	SMH-2	2-2"	NOTES 1,2
YC107	GENERATOR BLDG.	SMH-1	2-2"	NOTES 1,2
YC108	SMH-1	SMH-4	2-2"	NOTE 1
YC109	SMH-4	SMH-5	2-2"	NOTE 1
YC110	EMH-1	EMH-5	2-3"	NOTE 1
YC111	EMH-5	EMH-6	2-3"	NOTE 1
YC112	EMH-3	EMH-4	2-3"	NOTE 1
YC113				
YC114				
YC115				
YC116				
YC117				
YC118				
YC119				
YC120				
YC121				
YC122				
YC123				
YC124				
YC125				

NOTES:

1. PROVIDE PULL STRING IN CONDUIT.
2. STUB UP IN BUILDING AND CAP.
3. STUB UP AND CAP BOTH ENDS.

RECORD DRAWINGS

REVISIONS DRAWN BY: E. SMITH DATE: DEC. 2007

THESE RECORD DRAWINGS HAVE BEEN PREPARED, IN PART, ON THE BASIS OF INFORMATION COMPILED BY OTHERS, AND MAY NOT REPRESENT THE EXACT LOCAION, TYPE OF COMPONENT, NOR MANNER OF CONSTRUCTION. THE ENGINEER, OR THE ENGINEER'S REPRESENTATIVE, HAS MADE PERIODIC VISITS TO THE SITE TO OBSERVE THE PROGRESS OF THE EXECUTED WORK. AND HEREBY CERTIFIES, BASED UPON THE KNOWLEDGE DERIVED THERE-FROM AND IN ACCORDANCE WITH THE DEPARTMENT OF PROFESSIONAL REGULATION RULE 21-1-1B.011.(4) THAT THESE RECORD DRAWINGS ACCURATELY REFLECT THE WORK PERFORMED.

NO.	DATE	ISSUED FOR	BY
2	01/08	RECORD DRAWINGS	ES
1	05/04	BID SET	ML

DESIGNED M.E.L.
DRAWN M.E.L.
CHECKED P.F.H.
PROJ. ENGR. P.A.D.

HILLERS ELECTRICAL ENGINEERING, INC.
23257 STATE ROAD 7, SUITE 100
BOCA RATON, FLORIDA 33428
(561) 451-9165
(561) 451-4886 FAX
LICENSE NO: EB 0006877
MARK E. LUTHER P.E.
No. 48801

HAZEN AND SAWYER
Environmental Engineers & Scientists
4000 Hollywood Boulevard, Suite 750N
Hollywood, Florida 33021
Certificate of Authorization Number: 2771

SCALE: NONE

CONTRACT: 40406
CLIENTS PROJECT:
ENGINEERS PROJECT: 40406
CAD REFERENCE: 40406E30.DWG

CITY OF HALLANDALE BEACH
UTILITIES DEPARTMENT

6 MGD MEMBRANE SOFTENING W.T.P.

SCHEDULES

SHEET 5

DATE: JANUARY 2008
SHEET: 140 OF 162
DRAWING: E-30

9/28/2007 3:46 P.M. - 42 1LWD - H:\40406\FIG\TECHMEMO4\40406FIG4-2.dwg - XREFS: - PS 1=1

GENERAL NOTES & SPECIFICATIONS :

1. THE ELECTRICAL CONTRACTOR SHALL COMPLETE ALL ITEMS ON THE FOLLOWING ELECTRICAL SHEETS:
   A. PROVIDE AND INSTALL ELECTRICAL SERVICE POINT FOR 2 PROPOSED CONSTRUCTION TRAILERS COMPLETE IN PLACE.
   B. PROVIDE AND INSTALL TELEPHONE SERVICE FOR 2 CONSTRUCTION TRAILERS COMPLETE IN PLACE PER BELLSOUTH SPECIFICATIONS.
2. THE CONTRACTOR SHALL PROVIDE ALL MATERIALS AND LABOR TO INSTALL THE ELECTRICAL SYSTEMS AS INDICATED ON THE DRAWINGS. ITEMS NOT SHOWN BUT OBVIOUSLY NECESSARY FOR COMPLETION OF THE WORK SHALL BE INCLUDED.
3. THE INSTALLATION SHALL BE IN ACCORDANCE WITH THE NATIONAL ELECTRICAL CODE, FLORIDA BUILDING CODE, CITY CODES, ALL BROWARD COUNTY BUILDING CODES.
4. THE CONTRACTOR SHALL OBTAIN ALL NECESSARY PERMITS, INSPECTIONS, AND APPROVALS.
5. THE CONTRACTOR SHALL COORDINATE HIS WORK WITH THE ENGINEER AND OWNER.
6. THE CONTRACTOR SHALL, BEFORE SUBMITTING HIS BID VISIT THE SITE OF THE PROJECT AND BECOME FAMILIAR WITH THE EXISTING CONDITIONS. NO ALLOWANCE WILL BE MADE FOR EXISTING CONDITIONS OR FAILURE OF THE CONTRACTOR TO OBSERVE THEM.
7. IT IS THE CONTRACTORS RESPONSIBILITY TO COORDINATE BEFORE BIDDING WITH ALL LOCAL UTILITIES INCLUDING THE POWER, TELEPHONE, AND CABLE TV COMPANIES, AND TO MEET ALL OF THEIR INSTALLATION REQUIREMENTS. ALL LABOR, EQUIPMENT OR MATERIALS NECESSARY TO MEET THESE REQUIREMENTS IS TO BE INCLUDED IN THE BID. THE CONTRACTOR SHALL OBTAIN, DELIVER AND INSTALL ALL CONDUITS, PULLBOXES AND EQUIPMENT REQUIRED BY THE UTILITIES TO THEIR SPECIFICATIONS.
8. ELECTRICAL REPRESENTATIVE IS AS FOLLOWS:
   FLORIDA POWER AND LIGHT CO. – PHILIP GONZALEZ – 954–442–6335
   BELLSOUTH – EVAN BEWARY – 954–423–6296
9. GROUNDING SHALL BE INSTALLED IN ACCORDANCE WITH NEC. ARTICLE 250. THE GROUNDING SYSTEM SHALL NOT EXCEED 10 OHMS. THE EARTH SHALL BE DRY FOR 48 HOURS PRIOR TO TESTING. ADDITIONAL GROUNDING TO MEET THIS REQUIREMENT SHALL BE INSTALLED AT NO EXTRA COST, GROUNDING AND BONDING SHALL NOT BE PAINTED.
10. AN EQUIPMENT GROUND WIRE SIZED PER NEC SHALL BE PULLED IN ALL ELECTRICAL CONDUITS, POWER AND CONTROL, WHETHER OR NOT INDICATED ON PLANS.
11. ALL EQUIPMENT SHALL BE NEW AND UNUSED U.L. LISTED.
12. SHOP DRAWINGS SHALL BE SUBMITTED FOR THE FOLLOWING EQUIPMENT: PANELBOARDS, CONDUIT AND WIRE, CIRCUIT BREAKERS.
13. THE CONTRACTOR IS RESPONSIBLE TO TEST ALL SYSTEMS AND REPAIR OR REPLACE ALL DEFECTIVE WORK TO THE SATISFICATION OF THE ENGINEER AND OWNER.
14. ALL EQUIPMENT FURNISHED AND INSTALLED BY THE CONTRACTOR SHALL BE GUARANTEED AGAINST DEFECTS IN MATERIALS AND WORKMANSHIP FOR A PERIOD OF ONE YEAR FROM DATE OF ACCEPTANCE.
15. COORDINATE ALL ELECTRICAL EQUIPMENT LOCATIONS AND POWER REQUIREMENTS AND VERIFY ALL OBSTRUCTIONS WITH ALL SUBCONTRACTORS AND EQUIPMENT SUPPLIERS PRIOR TO ANY INSTALLATION.
16. THE DRAWINGS ARE NOT INTENDED TO SHOW THE EXACT LOCATION OF CONDUIT RUNS. THESE ARE TO BE COORDINATED WITH OTHER TRADES SO THAT CONFLICTS ARE AVOIDED PRIOR TO INSTALLATIONS.
17. ALL CONDUCTORS SHALL BE 600V, XHHW/THWN BELOW FINISHED GRADE AND WET LOCATIONS, OTHERWISE THWN/THHN SHALL BE INSTALLED ABOVE FINISHED GRADE (UNLESS OTHERWISE NOTED).
18. SCHEDULE 40 PVC SHALL BE USED UNDERGROUND. ALL ABOVE GRADE CONDUITS SHALL BE SCHEDULE 80 PVC MINIMUM CONDUIT SIZE SHALL BE 3/4".
19. FLEXIBLE CONDUITS SHALL BE USED TO TERMINATE ALL MOTORS AND OTHER VIBRATING EQUIPMENT AND SHALL BE BETWEEN 18" AND 3" IN LENGTH.
20. TYPEWRITTEN PANEL SCHEDULES SHALL BE INSTALLED IN EACH PANELBOARD, AND TERMINAL BLOCK SCHEDULES IN EACH CONTROL CABINET.
21. ALL REFERENCES TO A MANUFACTURER ARE GIVEN ON AN "APPROVED EQUAL" BASIS.
22. ALL SPARE CONDUITS SHALL BE CAPPED WITH A PVC CAP.
23. ALL CIRCUITS SHALL BE IDENTIFIED IN PULL BOXES, LIGHTING POLES, CONTROLLERS AND SERVICE POINT. IDENTIFICATIONS SHALL MATCH PANEL SCHEDULE.
24. EXPOSED RUNS OF CONDUITS SHALL BE INSTALLED WITH RUNS PARALLEL OR PERPENDICULAR TO WALL, STRUCTURAL MEMBERS OR INTERSECTIONS OF VERTICAL PLANES AND CEILINGS, WITH RIGHT ANGLE TURNS CONSISTING OF SYMMETRICAL BENDS OR PULL BOXES AS INDICATED ON THE DRAWINGS. BENDS AND OFFSETS SHALL BE AVOIDED WHERE POSSIBLE.
25. ALL CONDUITS PENETRATING RATED FIRE WALLS OR RATED FIRE FLOORS SHALL BE U.L. APPROVED DEVICES TO MAINTAIN THE FIRE RATING OF THE FLOOR OR WALL PENETRATED.
26. BALANCE ALL LOADS AT END OF PROJECT WITH ALL LIGHTS ON.
27. ALL BUSSES SHALL BE COPPER.

INSTALLATION NOTES

(1) CONTRACTOR SHALL PROVIDE AND INSTALL FPL SERVICE AS REQUIRED, 120/208V 3 PH, WITH CT METER. COORDINATE FPL SERVICE LOCATION WITH FPL PRIOR TO INSTALLATION.

(2) CONTRACTOR SHALL PROVIDE AND INSTALL 1–225A, 120/208V, 3 PHASE PANELBOARD WITH 1–225A, 3 POLE MAIN BREAKER, 30 BRANCH SPACES, NEMA 3R ENCLOSURE, SQUARE "D" NQOD CLASS 1630 OR APPROVED EQUAL.

(3) CONTRACTOR SHALL PROVIDE AND INSTALL 1–100A, 240V RATED, 2 POLE CIRCUIT BREAKER FOR EACH TRAILER, SEE PANEL SCHEDULE AND RISER DIAGRAM FOR DETAILS. MAKE ALL CONNECTIONS FOR A COMPLETE WORKING SYSTEM IN PLACE.

(4) CONTRACTOR SHALL PROVIDE AND INSTALL 4–#4/0 AWG, 1#4/0G, 3"C, COMPLETE IN PLACE FROM FPL TRANSFORMER TO 225A MAIN CIRCUIT BREAKER IN DP–1. SEE SITE PLAN FOR CONDUIT LOCATION. MAKE ALL NECESSARY CONNECTIONS FOR A COMPLETE WORKING SYSTEM IN PLACE.

(5) PROVIDE GROUNDING OF ALL METAL SUPPORTS AND EQUIPMENT ATTACHED BY A MECHANICAL LUG AND BOLTED TO EQUIPMENT AND CONNECTED TO GROUNDING SYSTEM AS PER RISER DIAGRAM.

(6) THE PEDESTAL SIZE SHALL BE ADJUSTED IN THE FIELD AT NO ADDITIONAL COST TO THE OWNER IN ORDER TO ACCOMMODATE THE DIFFERENT EQUIPMENT SIZES SPECIFIED AND FURNISHED BY OWNER.

(7) THE CONTRACTOR SHALL PROVIDE AND INSTALL BELLSOUTH APPROVED TERMINAL BOX AND 1–4"C FROM BELLSOUTH SERVICE POINT TO NEW TERMINAL BOX. MAKE ALL CONNECTIONS AND INSTALLATIONS PER BELLSOUTH REQUIREMENTS AND SPECIFICATIONS.

(8) THE CONTRACTOR SHALL PROVIDE AND INSTALL 1–WIREWAY 10" MIN. HEGHT, NEMA 3R, SIZED ACCORDING TO NEC 373–6A. MAKE ALL CONNECTIONS FOR A COMPLETE SYSTEM IN PLACE.

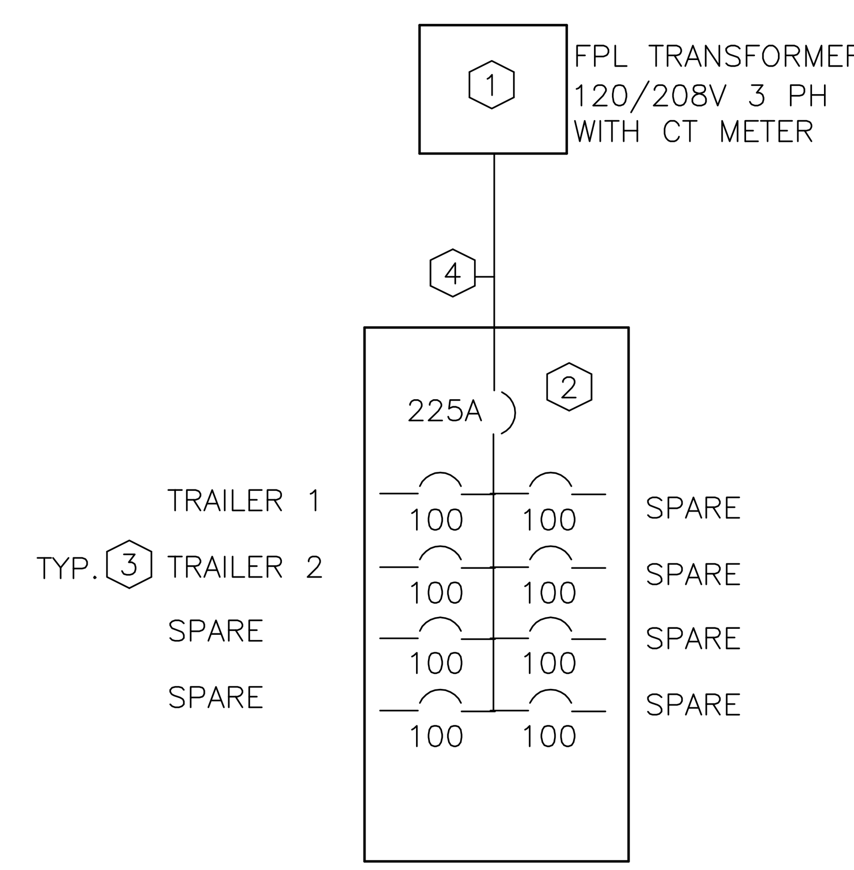

ELECTRICAL RISER

NTS

LOAD SUMMARY AND CALCULATIONS

DESCRIPTION	AMPS			TOTAL LOAD IN KVA
ITEM	A	B	C	
PANELBOARD DP–1	120	60	60	28.8

SERVICE @208v, 3ø: 120A + 25%= 150A

MINIMUM MAIN BREAKER SIZE IS 600A

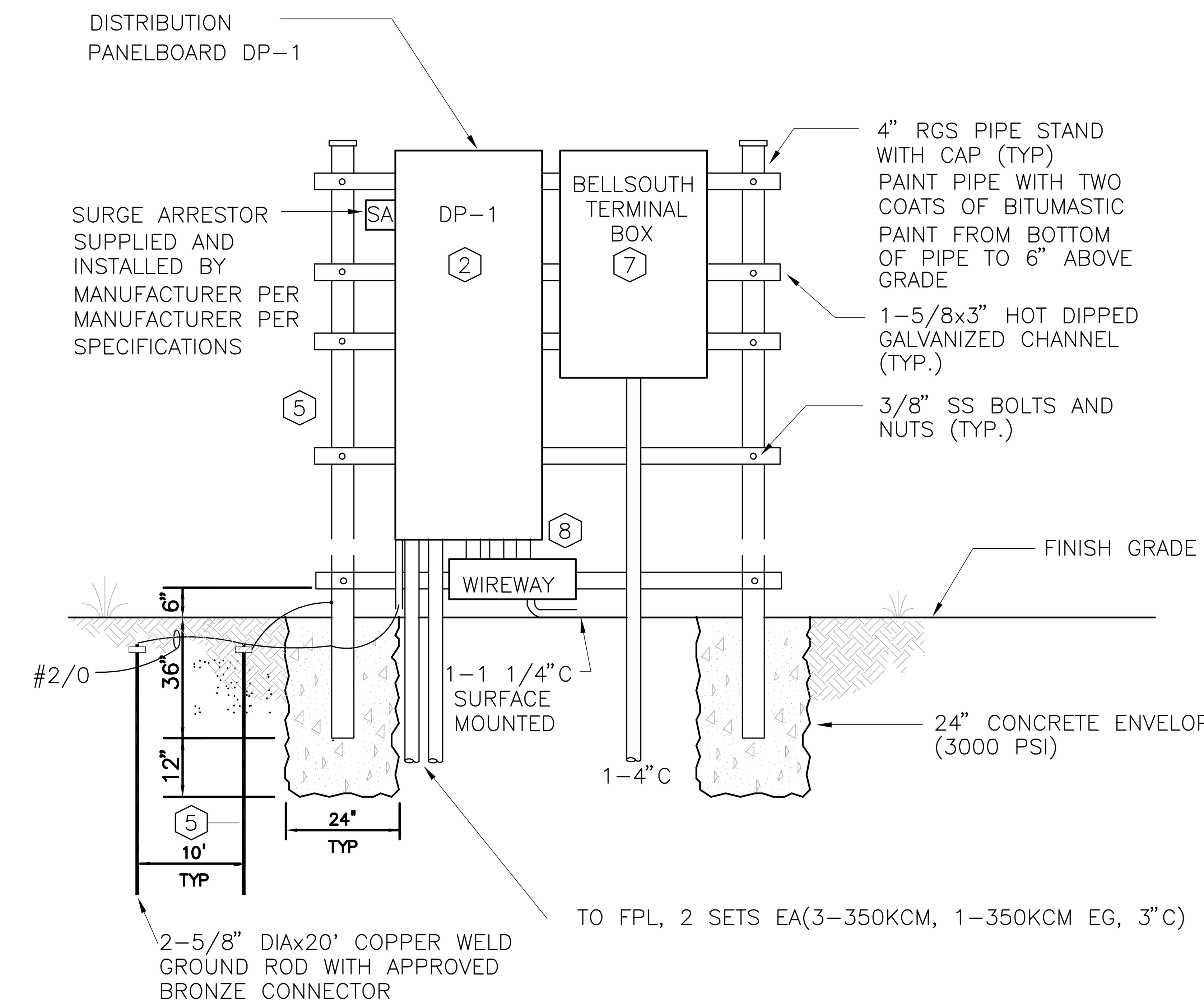

NEW SERVICE PEDESTAL

(TYPICAL)

NOT TO SCALE

PANELBOARD "DP–1" SCHEDULE, SQUARE–D, NQOD, CLASS 1630

BUS AMPS A	BUS AMPS B	BUS AMPS C	LOAD	POLES	AMPS	BUS A B C	AMPS	POLES	LOAD	BUS AMPS A	BUS AMPS B	BUS AMPS C
60			TRAILER 1	2	100	1 – 2	100	2	SPARE			
	60		⊥	⊥	⊥	3 – 4	⊥	⊥	⊥			
		60	TRAILER 2	2	100	5 – 6	100	2	SPARE			
60			⊥	⊥	⊥	7 – 8	⊥	⊥	⊥			
			SPACE			9 – 10	100	2	SPARE			
						11 – 12	⊥	⊥	⊥			
						13 – 14	100	2	SPARE			
						15 – 16	⊥	⊥	⊥			
						17 – 18			SPACE			
						19 – 20						
						21 – 22						
						23 – 24						
						25 – 26						
						27 – 28						
			⊥			29 – 30			⊥			

TOTAL AMPS: BUS A 120 BUS B 60 BUS C 60 CONNECTED Kva 28.8

RATED VOLTAGE: ■ 120/208 □ 277/480 3 PHASE, 4 WIRE | BRANCH POLES □ 12 □ 24 ■ 30 □ 42

RATED AMPS: □ 100 □ 225 □ 400 ■ 600 | CABINET: ■ SURFACE □ FLUSH

FULL NEUTRAL BUS | ■ GROUND BUS | ■ HINGED DOOR | ■ KEYED DOOR LATCH | ENCLOSURE TYPE NEMA 3R

□ FUSED ■ CIRCUIT BREAKER (BOLT–IN) BRANCH DEVICES

□ MAIN LUGS ONLY | MAIN 600 AMPS ■ BREAKER □ FUSED SWITCH | □ ________ TO BE GFI BREAKERS

ALL BREAKERS MUST BE RATED TO INTERRUPT A SHORT CIRCUIT ISC OF _____,000 AMPS SYMMETRICAL.

APPROVED MF'RS. WESTINGHOUSE, ITE, SQUARE D GE ONLY | MAIN LUGS ________ SETS SIZE: _________

RECORD DRAWINGS

REVISIONS DRAWN BY: E. SMITH DATE: DEC. 2007

THESE RECORD DRAWINGS HAVE BEEN PREPARED, IN PART, ON THE BASIS OF INFORMATION COMPILED BY OTHERS, AND MAY NOT REPRESENT THE EXACT LOCAION, TYPE OF COMPONENT, NOR MANNER OF CONSTRUCTION. THE ENGINEER, OR THE ENGINEER'S REPRESENTATIVE, HAS MADE PERIODIC VISITS TO THE SITE TO OBSERVE THE PROGRESS OF THE EXECUTED WORK. AND HEREBY CERTIFIES, BASED UPON THE KNOWLEDGE DERIVED THERE–FROM AND IN ACCORDANCE WITH THE DEPARTMENT OF PROFESSIONAL REGULATION RULE 21–1–1B.011.(4) THAT THESE RECORD DRAWINGS ACCURATELY REFLECT THE WORK PERFORMED.

NO.	DATE	ISSUED FOR	BY
2	01/08	RECORD DRAWINGS	ES
1	10/03	BID SET	ML

DESIGNED M.E.L.
DRAWN M.E.L.
CHECKED P.F.H.
PROJ. ENGR. P.A.D.

HILLERS ELECTRICAL ENGINEERING, INC.
23257 STATE ROAD 7, SUITE 100
BOCA RATON, FLORIDA 33428
(561) 451–9165
(561) 451–4886 FAX
LICENSE NO: EB 0006877
MARK E. LUTHER P.E.
No. 48801

HAZEN AND SAWYER
Environmental Engineers & Scientists
4000 Hollywood Boulevard, Suite 750N
Hollywood, Florida 33021
Certificate of Authorization Number: 2771

SCALE NONE

CONTRACT: 40406
CLIENTS PROJECT:
ENGINEERS PROJECT: 40406
CAD REFERENCE: 40406E31.DWG

CITY OF HALLANDALE BEACH
UTILITIES DEPARTMENT

6 MGD MEMBRANE SOFTENING W.T.P.

CONTRACTOR'S TRAILER TEMPORARY TRAILER POWER DETAILS

DATE: JANUARY 2008
SHEET: 141 OF 162
DRAWING: E–31

9/28/2001/3:46 P.M. – 42 HLWD – H:\40406\FIG\TECHMEMO4\40406FIG4–2.dwg – XREFS: – PS 1=1

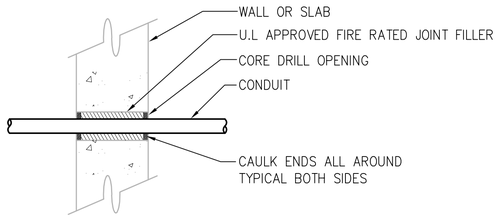

1 VAR. CONDUIT PENETRATION AT WALL OR SLAB

NOT TO SCALE

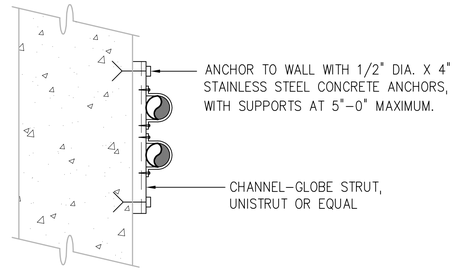

2 VAR. CONDUIT SUPPORT

NOT TO SCALE

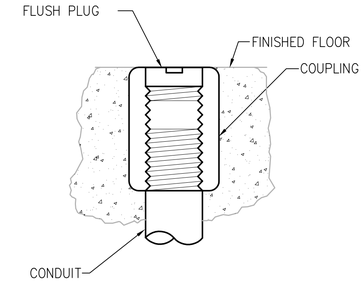

3 VAR. CONDUIT FLOOR STUB-UP

NOT TO SCALE

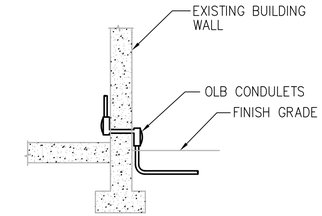

4 VAR. CONDUIT ENTRANCE

NOT TO SCALE

NOTES:

1. THIS DETAIL TYPICAL FOR BOTH VERTICAL AND HORIZONTAL MOUNTING
2. CHANNEL AND ALL SUPPORT DEVICES TO BE HOT DIP GALVANIZED STEEL. FIELD COAT ALL CUTS, ETC. TO MATCH.
3. CHANNELS TO BE SPACED 5' MAXIMUM.

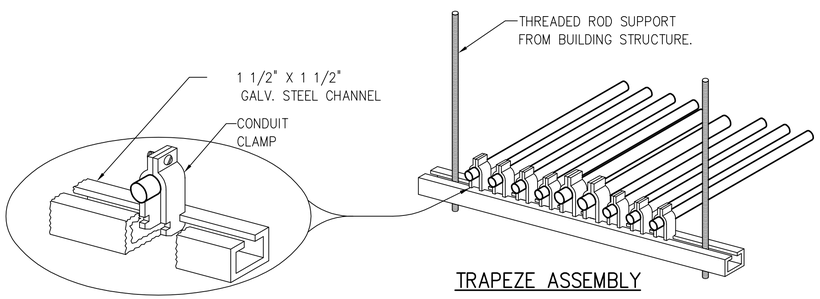

TRAPEZE ASSEMBLY

CONDUIT PIPE STRAP MOUNTING DETAILS

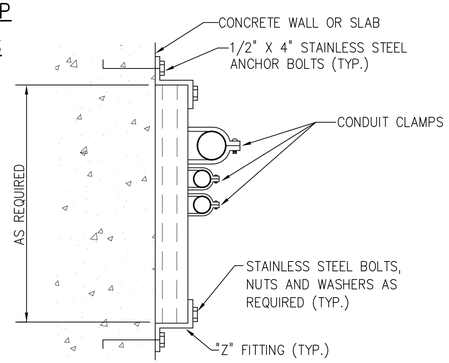

5 VAR. CONDUIT SUPPORT

NOT TO SCALE

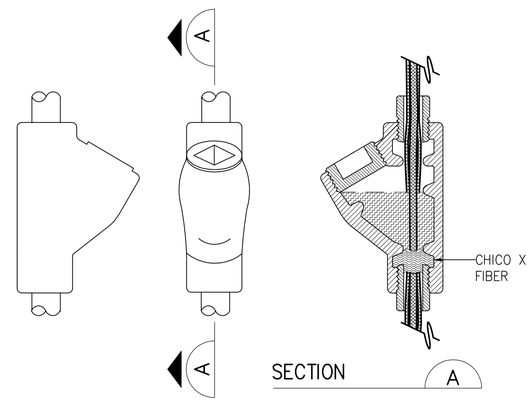

6 VAR. CONDUIT SEAL

NOT TO SCALE

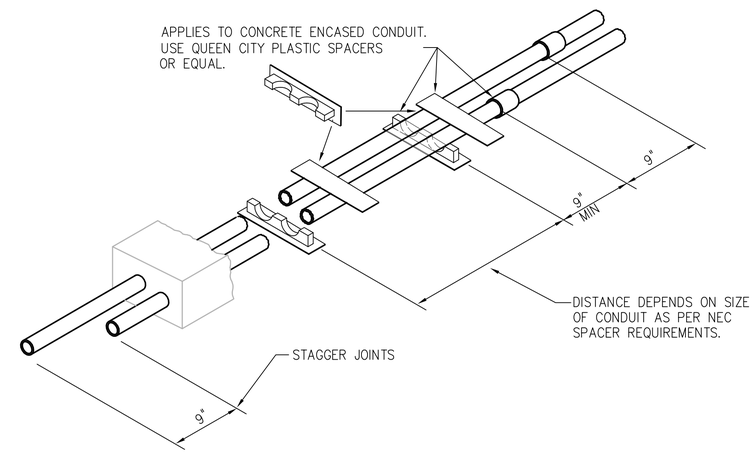

7 VAR. HORIZONTAL STAGGERING OF SPACERS AND JOINTS

NOT TO SCALE

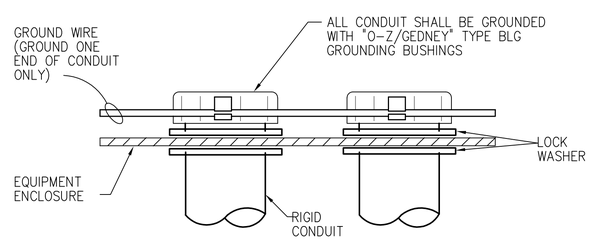

8 VAR. CONDUIT GROUNDING

NOT TO SCALE

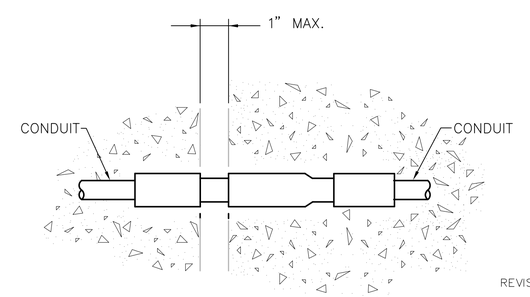

9 VAR. EXPANSION COUPLING

NOT TO SCALE

RECORD DRAWINGS

REVISIONS DRAWN BY: E. SMITH DATE: DEC. 2007

THESE RECORD DRAWINGS HAVE BEEN PREPARED, IN PART, ON THE BASIS OF INFORMATION COMPILED BY OTHERS, AND MAY NOT REPRESENT THE EXACT LOCAION, TYPE OF COMPONENT, NOR MANNER OF CONSTRUCTION. THE ENGINEER, OR THE ENGINEER'S REPRESENTATIVE, HAS MADE PERIODIC VISITS TO THE SITE TO OBSERVE THE PROGRESS OF THE EXECUTED WORK. AND HEREBY CERTIFIES, BASED UPON THE KNOWLEDGE DERIVED THERE-FROM AND IN ACCORDANCE WITH THE DEPARTMENT OF PROFESSIONAL REGULATION RULE 21-1-1B.011.(4) THAT THESE RECORD DRAWINGS ACCURATELY REFLECT THE WORK PERFORMED.

NO.	DATE	ISSUED FOR	BY
2	01/08	RECORD DRAWINGS	ES
1	10/03	BID SET	ML

DESIGNED M.E.L.
DRAWN M.E.L.
CHECKED P.F.H.
PROJ. ENGR. P.A.D.

HILLERS ELECTRICAL ENGINEERING, INC.
23257 STATE ROAD 7, SUITE 100
BOCA RATON, FLORIDA 33428
(561) 451-9165
(561) 451-4886 FAX
LICENSE NO: EB 0006877
MARK E. LUTHER P.E.
No. 48801

HAZEN AND SAWYER
Environmental Engineers & Scientists
4000 Hollywood Boulevard, Suite 750N
Hollywood, Florida 33021
Certificate of Authorization Number: 2771

SCALE: NONE

CONTRACT: 40406
CLIENTS PROJECT:
ENGINEERS PROJECT: 40406
CAD REFERENCE: 40406E32.DWG

CITY OF HALLANDALE BEACH
UTILITIES DEPARTMENT

6 MGD MEMBRANE SOFTENING W.T.P.

ELECTRICAL DETAILS

SHEET 1

DATE: JANUARY 2008
SHEET: 142 OF 162
DRAWING: E-32

9/28/2007 3:46 P.M. - 42 PLWD - H:\40406\FIG\TECHMEMO4\40406FIG4-2.dwg - XREFS: - PS 1=1

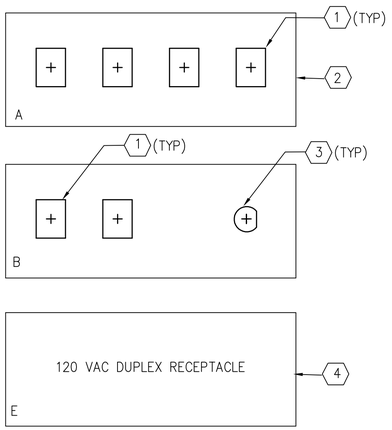

FLOOR BOX DEVICE PLATES
CONNECTOR ARRANGEMENT
SCALE: 1/2"

KEYED NOTES:

1. RJ-45 CATEGORY 5 COMPLIANT
2. BLANK PLATE, CUSTOM DRILL AS REQUIRED
3. TYPE "F" CONNECTOR FOR VIDEO DISTRIBUTION
4. BOX MANUFACTURER STANDARD PART

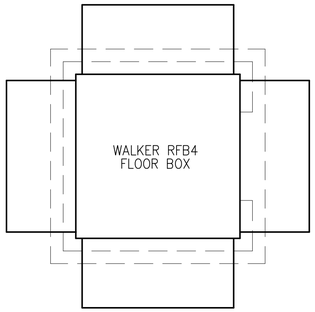

10 VAR. FLOOR BOX–PARTIAL PLAN
SCALE: 1/4"

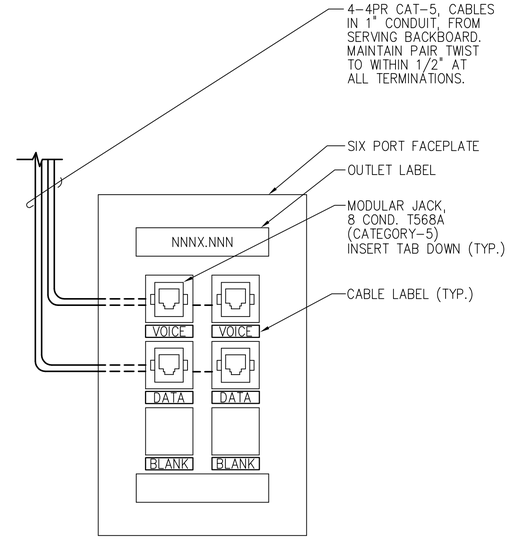

11 VAR. 4 OUTLET CONFIGURATION

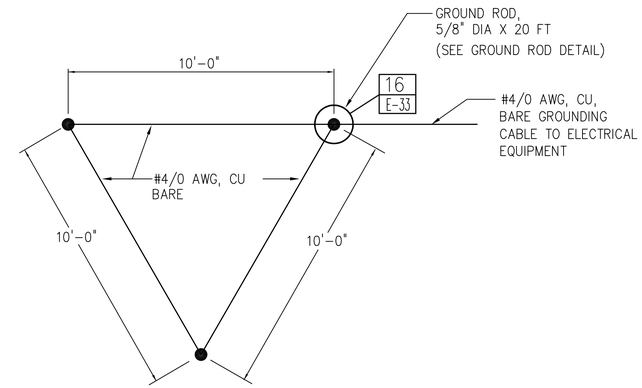

12 VAR. GROUNDING DELTA LAYOUT
NOT TO SCALE

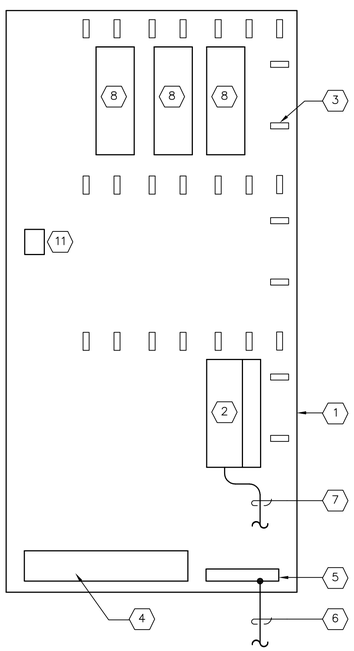

KEYED NOTES:

1. 4'x 8' x 3/4" PLYWOOD BACKBOARD
2. 100 PAIR PROTECTOR BLOCK W/26 AWG STUB–IN CABLE & QUICK CLIP BLOCK OUTPUT, RELIANCE #R134C–100AC OR APPROVED EQUIVALENT. QUANTITY AS REQUIRED. PROVIDE PROTECTORS AS DESCRIBED IN THE TELECOMMUNICATIONS SPECIFICATIONS.
3. CABLE MANAGEMENT RINGS, AS REQUIRED.
4. INDOOR SPLICE CLOSURE, SIZE AS REQUIRED. USE 3M K&B SERIES OR EQUAL.
5. 1/4"x 1"x 12" COPPER GROUND BAR. NEWTON INSTRUMENTS FIG3059, OR EQUIVALENT.
6. #6 AWG, GREEN INSULATED, TO BUILDING SERVICE GROUND POINT.
7. #10 AWG FROM EACH PROTECTOR BLOCK TO GROUND BAR.
8. CABLE DISTRIBUTION PANEL. QUANTITY AS REQUIRED. RE: DETAIL 1/COM–D2
9. INDOOR SPLICE CLOSURE, AS REQUIRED.
10. #8 AWG, GREEN INSULATED, TO GROUND BAR ON PROTECTOR BACKBOARD.
11. DEDICATED QUADPLEX OUTLET MOUNTED ON PROTECTOR BACKBOARD.

13 VAR. TELEPHONE PROTECTOR BACKBOARD
NOT TO SCALE

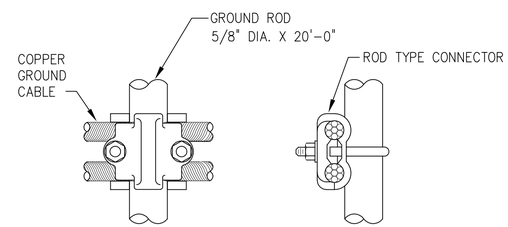

14 VAR. CABLE TO ROD CONNECTION
NOT TO SCALE

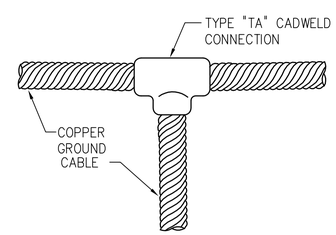

15 VAR. GROUND CABLE CONNECTION
NOT TO SCALE

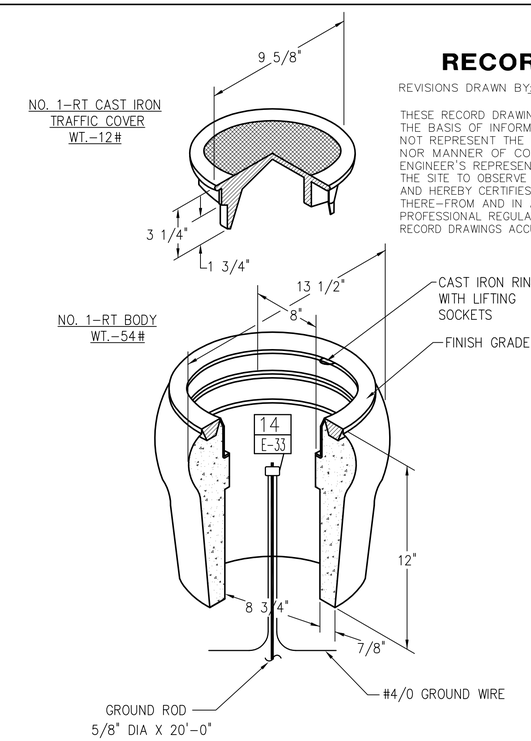

16 VAR. GROUND ROD DETAIL
NOT TO SCALE

RECORD DRAWINGS

REVISIONS DRAWN BY: E. SMITH DATE: DEC. 2007

THESE RECORD DRAWINGS HAVE BEEN PREPARED, IN PART, ON THE BASIS OF INFORMATION COMPILED BY OTHERS, AND MAY NOT REPRESENT THE EXACT LOCAION, TYPE OF COMPONENT NOR MANNER OF CONSTRUCTION. THE ENGINEER, OR THE ENGINEER'S REPRESENTATIVE, HAS MADE PERIODIC VISITS TO THE SITE TO OBSERVE THE PROGRESS OF THE EXECUTED WORK AND HEREBY CERTIFIES, BASED UPON THE KNOWLEDGE DERIVED THERE–FROM AND IN ACCORDANCE WITH THE DEPARTMENT OF PROFESSIONAL REGULATION RULE 21–1–1B.011.(4) THAT THESE RECORD DRAWINGS ACCURATELY REFLECT THE WORK PERFORMED.

NO.	DATE	ISSUED FOR	BY
2	01/08	RECORD DRAWINGS	ES
1	10/03	BID SET	ML

DESIGNED M.E.L.
DRAWN M.E.L.
CHECKED P.F.H.
PROJ. ENGR. P.A.D.

HILLERS ELECTRICAL ENGINEERING, INC.
23257 STATE ROAD 7, SUITE 100
BOCA RATON, FLORIDA 33428
(561) 451–9165
(561) 451–4886 FAX
LICENSE NO: EB 0006877
MARK E. LUTHER P.E.
No. 48801

HAZEN AND SAWYER
Environmental Engineers & Scientists
4000 Hollywood Boulevard, Suite 750N
Hollywood, Florida 33021
Certificate of Authorization Number: 2771

SCALE: NONE

CONTRACT: 40406
CLIENTS PROJECT:
ENGINEERS PROJECT: 40406
CAD REFERENCE: 40406E33.DWG

CITY OF HALLANDALE BEACH
UTILITIES DEPARTMENT

6 MGD MEMBRANE SOFTENING W.T.P.

ELECTRICAL DETAILS
SHEET 2

DATE: JANUARY 2008
SHEET: 143 OF 162
DRAWING: E–33

9/28/2001/3:46 P.M. – 42 HLWD – H:\40406\FIG\TECHNEMDO\40406FIG4-2.dwg – XREFS: – PS 1=1

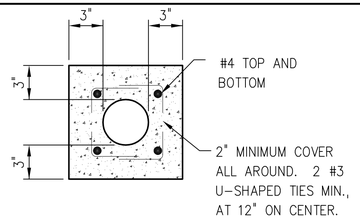

17 VAR. 1-WAY CONCRETE ENCASED DUCTBANK (A / E-3)

NOT TO SCALE

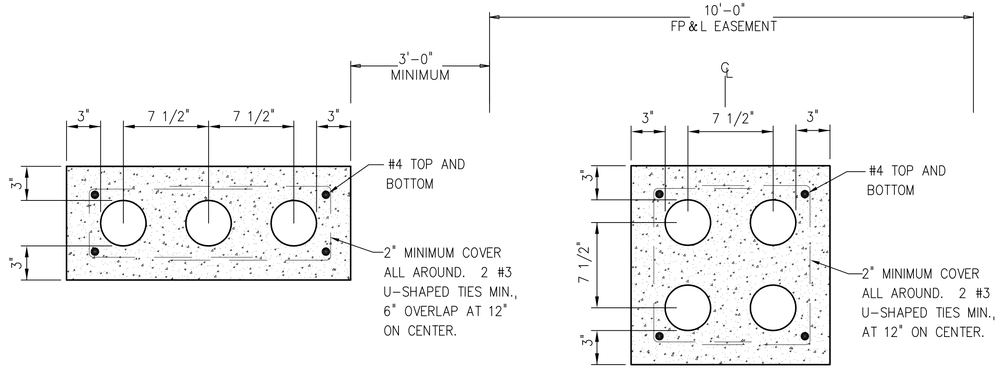

3-WAY DUCTBANK

4-WAY DUCTBANK

18 VAR. DUCTBANK DETAIL

NOT TO SCALE

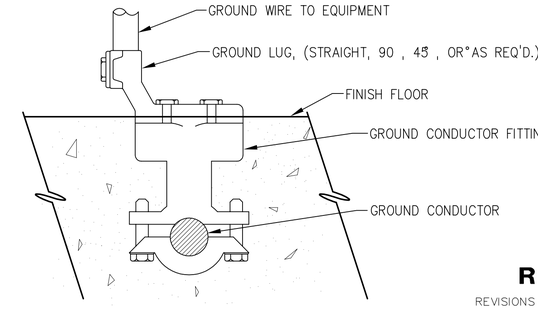

NOTE: BOLTS SHALL BE INSERTED IN BOLT HOLES BEFORE CONNECTOR IS EMBEDDED.

19 VAR. GROUNDING INSERT

NOT TO SCALE

RECORD DRAWINGS

REVISIONS DRAWN BY: E. SMITH DATE: DEC. 2007

THESE RECORD DRAWINGS HAVE BEEN PREPARED, IN PART, ON THE BASIS OF INFORMATION COMPILED BY OTHERS, AND MAY NOT REPRESENT THE EXACT LOCAION, TYPE OF COMPONENT, NOR MANNER OF CONSTRUCTION. THE ENGINEER, OR THE ENGINEER'S REPRESENTATIVE, HAS MADE PERIODIC VISITS TO THE SITE TO OBSERVE THE PROGRESS OF THE EXECUTED WORK. AND HEREBY CERTIFIES, BASED UPON THE KNOWLEDGE DERIVED THERE-FROM AND IN ACCORDANCE WITH THE DEPARTMENT OF PROFESSIONAL REGULATION RULE 21-1-1B.011.(4) THAT THESE RECORD DRAWINGS ACCURATELY REFLECT THE WORK PERFORMED.

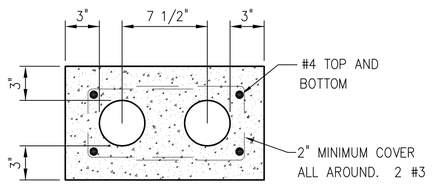

20 VAR. 2-WAY DUCTBANK

NOT TO SCALE

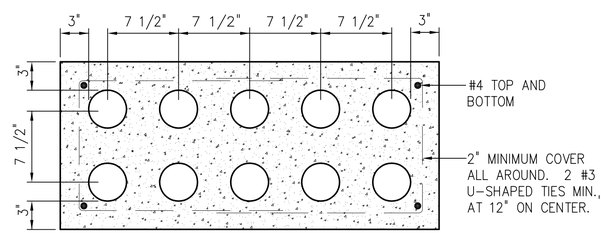

21 VAR. 10-WAY DUCTBANK

NOT TO SCALE

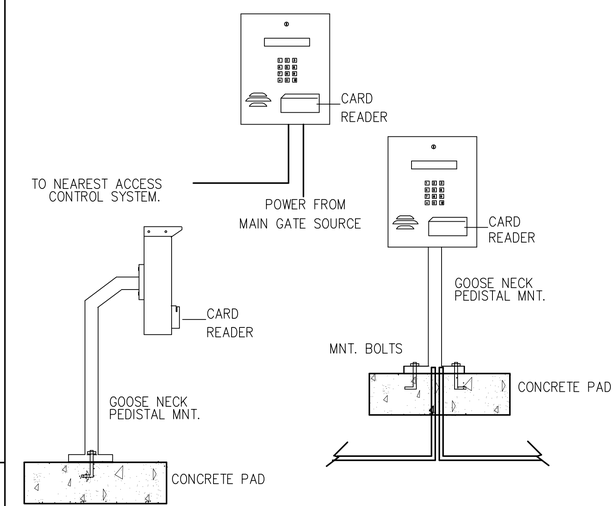

22 VAR. GATE ENTRY SYSTEM

NOT TO SCALE

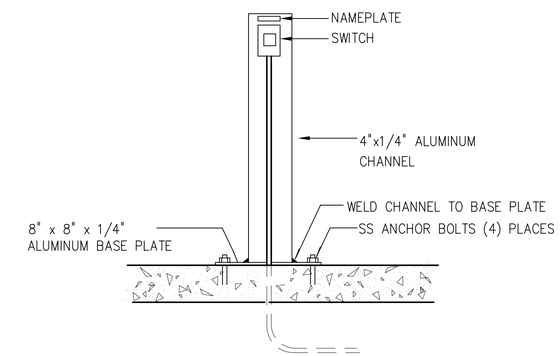

23 VAR. SWITCH PEDESTAL

NOT TO SCALE

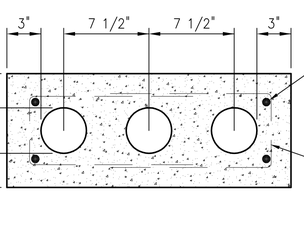

24 VAR. 3-WAY CONCRETE ENCASED DUCTBANK

NOT TO SCALE

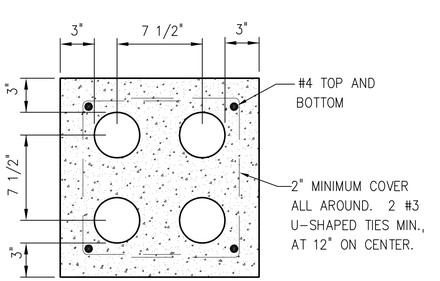

25 VAR. 4-WAY DUCTBANK

NOT TO SCALE

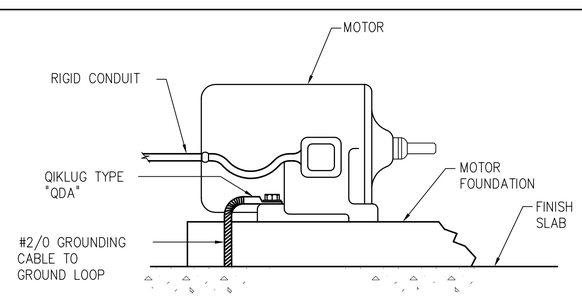

NOTE:
THIS GROUND IS IN ADDITION TO THE GROUND FROM THE MAIN ELECTRICAL SERVICE.

26 VAR. EQUIPMENT GROUNDING DETAIL

(TYPICAL)

NOT TO SCALE

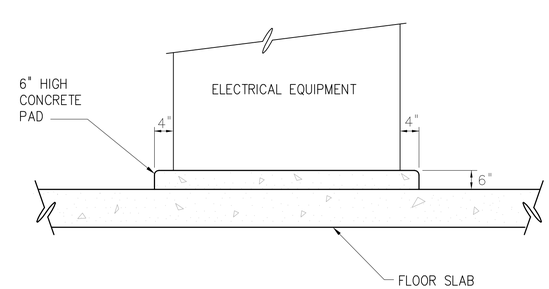

27 VAR. EQUIPMENT HOUSE KEEPING PAD

NOT TO SCALE

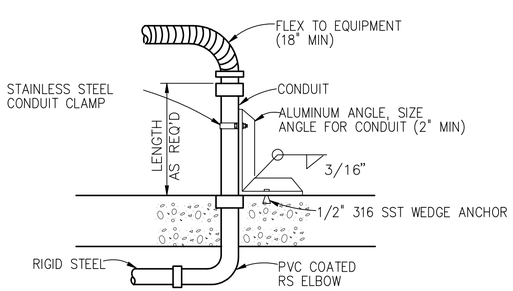

28 VAR. CONDUIT TRANSITION AND SUPPORT DETAIL

NOT TO SCALE

NO.	DATE	ISSUED FOR	BY
2	01/08	RECORD DRAWINGS	ES
1	10/03	BID SET	ML

DESIGNED M.E.L.
DRAWN M.E.L.
CHECKED P.F.H.
PROJ. ENGR. P.A.D.

HILLERS ELECTRICAL ENGINEERING, INC.
23257 STATE ROAD 7, SUITE 100
BOCA RATON, FLORIDA 33428
(561) 451-9165
(561) 451-4886 FAX
LICENSE NO: EB 0006877
MARK E. LUTHER P.E.
No. 48801

HAZEN AND SAWYER
Environmental Engineers & Scientists
4000 Hollywood Boulevard, Suite 750N
Hollywood, Florida 33021
Certificate of Authorization Number: 2771

SCALE: AS SHOWN

CONTRACT: 40406
CLIENTS PROJECT:
ENGINEERS PROJECT: 40406
CAD REFERENCE: 40406E34.DWG

CITY OF HALLANDALE BEACH
City of Choice
CITY OF HALLANDALE BEACH
UTILITIES DEPARTMENT

6 MGD MEMBRANE SOFTENING W.T.P.

ELECTRICAL DETAILS

SHEET 3

DATE: JANUARY 2008
SHEET: 144 OF 162
DRAWING: E-34

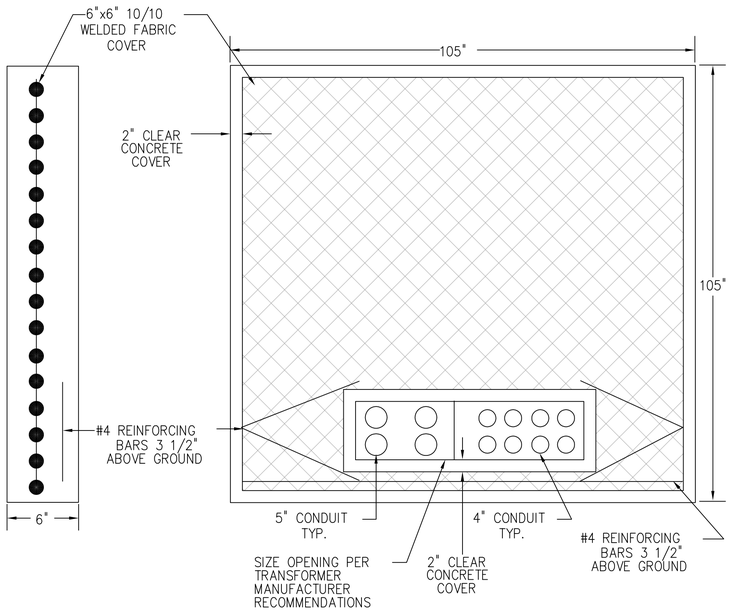

NOTE:

1. INSTALL THREADED INSERTS AS REQUIRED BY TRANSFORMER MANUFACTURER TO ANCHOR TRANSFORMER TO PAD.
2. COORDINATE ALL REQUIREMENTS WITH POWER UTILITY

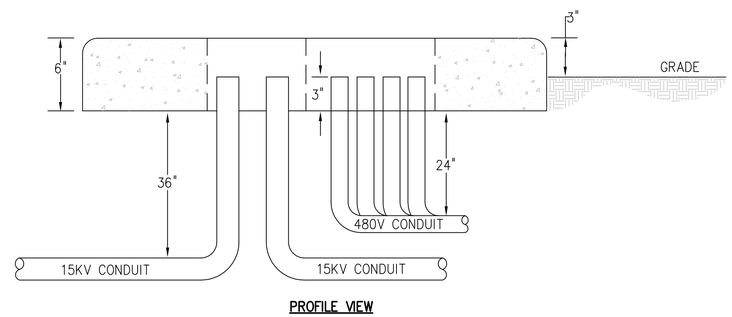

29 VAR. 2500 KVA TRANSFORMER PAD DETAIL

NOT TO SCALE

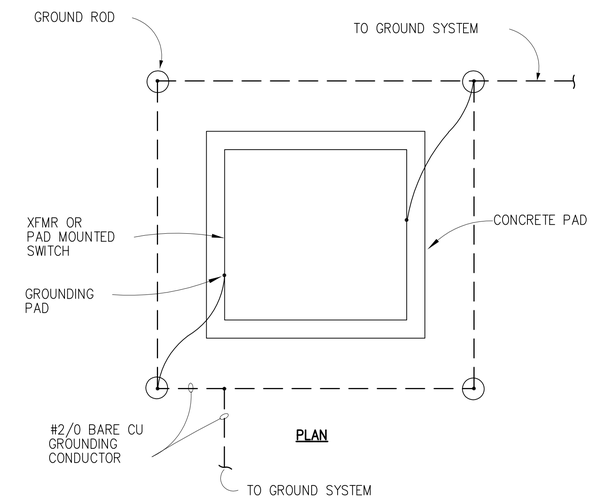

30 VAR. PAD MOUNTED TRANSFORMER GROUNDING

NOT TO SCALE

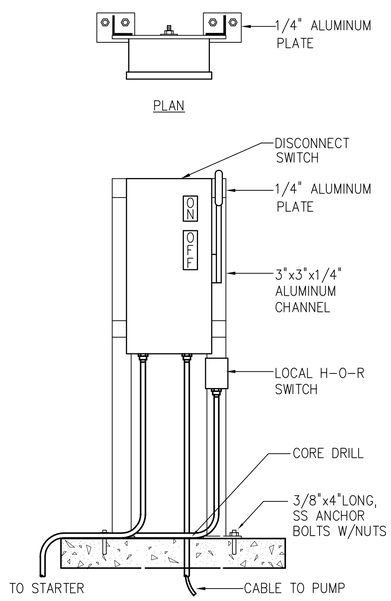

31 VAR. DISCONNECT SWITCH PEDESTAL WITH H-O-R SWITCH

NOT TO SCALE

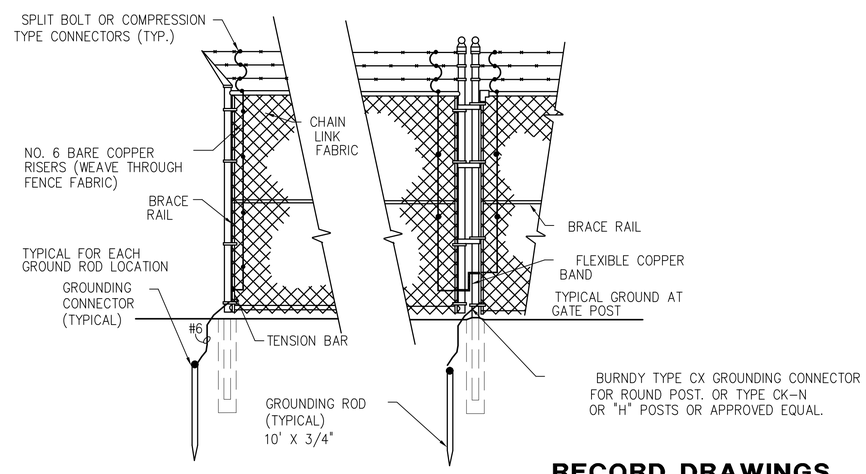

32 VAR. FENCE GROUNDING DETAIL

NOT TO SCALE

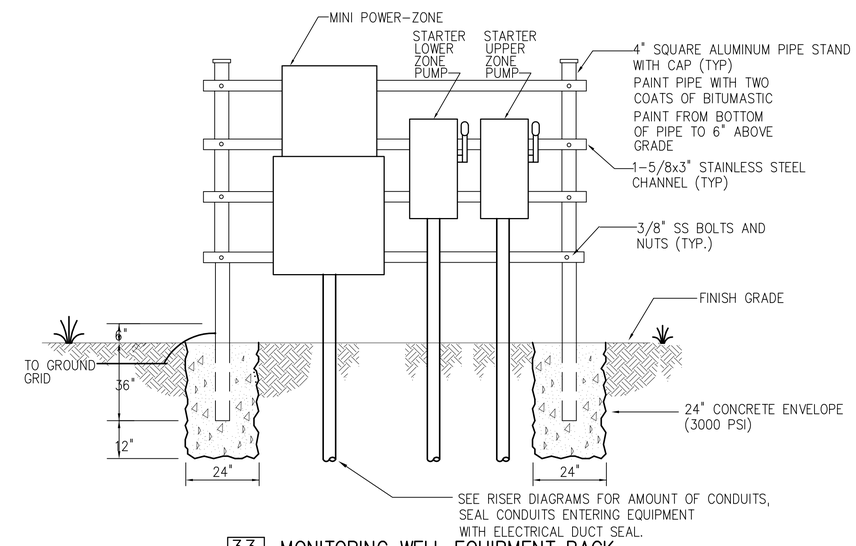

33 VAR. MONITORING WELL EQUIPMENT RACK

NOT TO SCALE

RECORD DRAWINGS

REVISIONS DRAWN BY: E. SMITH DATE: DEC. 2007

THESE RECORD DRAWINGS HAVE BEEN PREPARED, IN PART, ON THE BASIS OF INFORMATION COMPILED BY OTHERS, AND MAY NOT REPRESENT THE EXACT LOCAION, TYPE OF COMPONENT, NOR MANNER OF CONSTRUCTION. THE ENGINEER, OR THE ENGINEER'S REPRESENTATIVE, HAS MADE PERIODIC VISITS TO THE SITE TO OBSERVE THE PROGRESS OF THE EXECUTED WORK AND HEREBY CERTIFIES, BASED UPON THE KNOWLEDGE DERIVED THERE-FROM AND IN ACCORDANCE WITH THE DEPARTMENT OF PROFESSIONAL REGULATION RULE 21-1-1B.011.(4) THAT THESE RECORD DRAWINGS ACCURATELY REFLECT THE WORK PERFORMED.

NO.	DATE	ISSUED FOR	BY
2	01/08	RECORD DRAWINGS	ES
1	10/03	BID SET	ML

DESIGNED M.E.L.
DRAWN M.E.L.
CHECKED P.F.H.
PROJ. ENGR. P.A.D.

HILLERS ELECTRICAL ENGINEERING, INC.
23257 STATE ROAD 7, SUITE 100
BOCA RATON, FLORIDA 33428
(561) 451-9165
(561) 451-4886 FAX
LICENSE NO: EB 0006877
MARK E. LUTHER P.E.
No. 48801

HAZEN AND SAWYER
Environmental Engineers & Scientists
4000 Hollywood Boulevard, Suite 750N
Hollywood, Florida 33021
Certificate of Authorization Number: 2771

SCALE: NONE

CONTRACT: 40406
CLIENTS PROJECT:
ENGINEERS PROJECT: 40406
CAD REFERENCE: 40406E35.DWG

CITY OF HALLANDALE BEACH
UTILITIES DEPARTMENT

6 MGD MEMBRANE SOFTENING W.T.P.

ELECTRICAL DETAILS

SHEET 4

DATE: JANUARY 2008
SHEET: 145 OF 162
DRAWING: E-35

9/29/2001/3:46 P.M. - 42 HLND - H:\40406\FIG\TECHMEMO\40406FIG4-2.dwg - XREFS: - PS 1=1

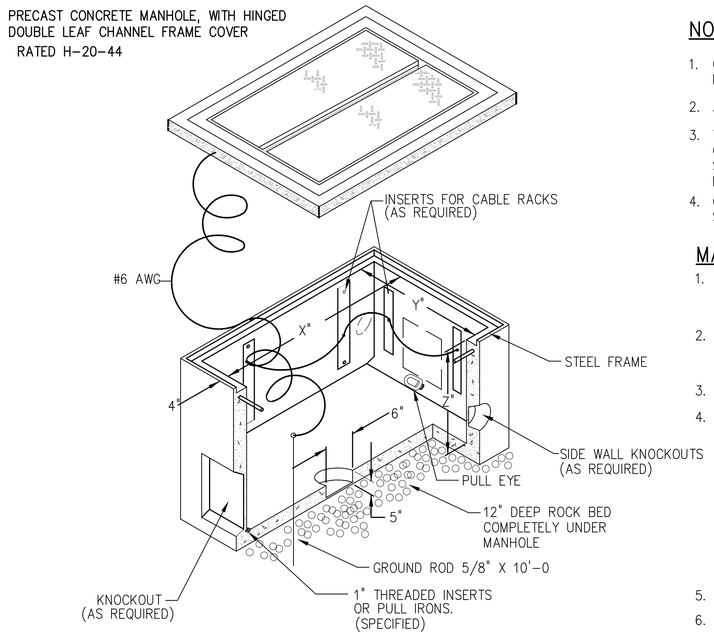

NOTE: COVER AND STEEL FRAME SHALL BE GROUNDED.
MANHOLE INTERNAL DIMENSIONS 60"x60"x60".

34 VAR. MANHOLE DETAIL

NOT TO SCALE

NOTES FOR ALL MANHOLES:

1. CONTRACTOR SHALL PROVIDE REQUIRED END BELL LOCATIONS TO MANHOLE MANUFACTURER BEFORE MANUFACTURING.
2. ALL MANHOLES SHALL BE H-20-44 TRAFFIC RATED.
3. THE HEIGHT OF CONDUIT ENTRANCES SHALL BE COORDINATED BY THE CONTRACTOR TO ACCOMMODATE OTHER UTILITIES IN THE AREA. SEE CIVIL AND ELECTRICAL SITE PLANS FOR ELEVATIONS REQUIREMENTS.
4. CONTRACTOR SHALL COORDINATE CONDUIT ENTRY REQUIREMENTS WITH SITE PLAN, PRIOR TO ORDERING MANHOLES.

MANHOLE NOTES:

1. CABLE RACK, JOSLYN J-5126 OR EQUAL
   CABLE HOOKS, JOSLYN J-5131A OR EQUAL
   CABLE RACK INSULATORS, JOSLYN J-5120
2. PULLING-IN-IRONS INSTALL OPPOSITE CONDUIT ENTRANCE. POSITION BELOW LEVEL OF CONDUIT ENTRANCE. HUBBART & CO. CATALOG 9119 OR EQUAL.
3. TERMINATE ALL DUCTS IN MANHOLE WITH END BELLS.
4. MANHOLE COVERS SHALL BE MARKED "ELECTRICAL HV", "ELECTRICAL LV" OR "INSTRUMENTATION" BY THE MANUFACTURER, WITH RAISED LETTERS. THE CONTRACTOR SHALL STAMP IN THE MANHOLE COVERS THE IDENTIFICATION NUMBER OF THE MANHOLE, LETTERS AND NUMBERS SHALL BE 2" HIGH.
   AS AN ALTERNATE THE CONTRACTOR MAY INSTALL SST NAMEPLATES ATTACHED WITH FOUR SST BOLTS TO THE MANHOLE. COVERS INDICATING THE MANHOLE NUMBER. LETTERS AND NUMBERS TO BE RAISED AND 2" HIGH. SUBMIT ONE SAMPLE NAMEPLATE FOR ENGINEER'S APPROVAL PRIOR TO INSTALLATION.
5. GROUND ROD, 5/8"X10'-0, COPPER CLAD.
6. BOUND DUCT BANK GROUNDS AND ALL METALLIC PARTS TO GROUNDING SYSTEM.
7. PRECAST CONCRETE MANHOLE WITH COVER, U.S. PRECAST CORP. OR EQUAL.
8. IMH - INSTRUMENTATION MANHOLE
   PMH - POWER MANHOLE

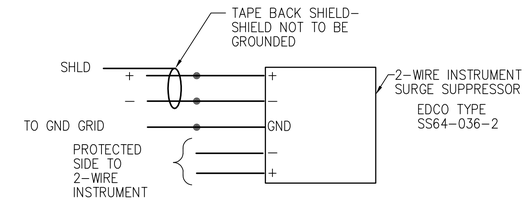

WIRING DIAGRAM

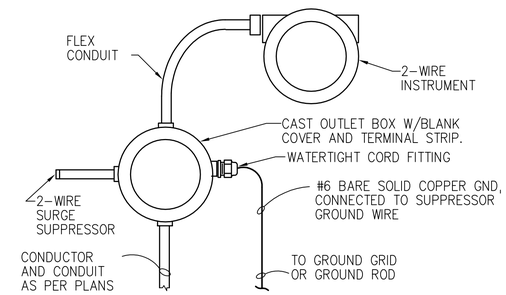

35 VAR. TYPE "A" SURGE SUPPRESSOR INSTALLATION 2-WIRE INSTRUMENT

NOT TO SCALE

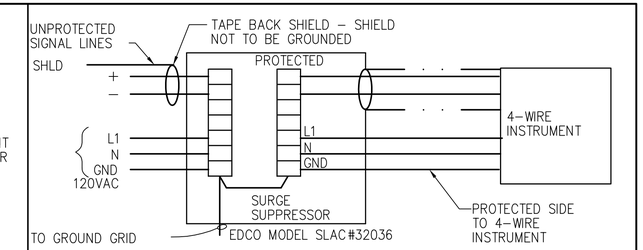

WIRING DIAGRAM

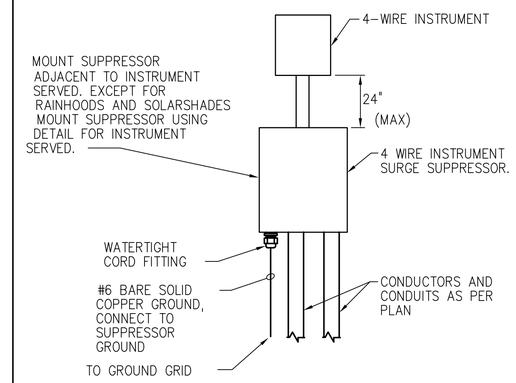

36 VAR. TYPE "B" SURGE SUPPRESSOR INSTALLATION 4-WIRE INSTRUMENT

NOT TO SCALE

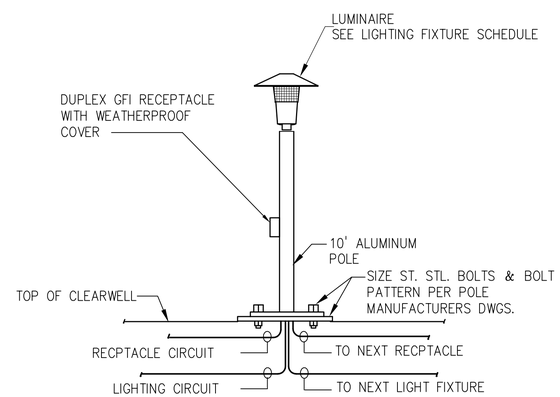

37 VAR. LIGHT FIXTURE MOUNTING ON CLEARWELL

NOT TO SCALE

WINDLOADING NOTE :

1. ALL POLE INSTALLATIONS SHALL BE SUITABLE FOR 140 MPH WIND WITH APPROPRIATE GUST FACTOR PER APPLICABLE ZONE OF INSTALLATION AS DEFINED IN THE FLORIDA BUILDING CODE. THE CONTRACTOR SHALL INCLUDE WITH THE SHOP DRAWING SUBMITTAL, A POLE WIND LOADING CALCULATION SIGNED & SEALED BY A STRUCTURAL ENGINEER REGISTERED IN FLORIDA SHOWING THAT THE PROPOSED INSTALLATIONS WILL MEET THE GIVEN WIND LOADING REQUIREMENT.

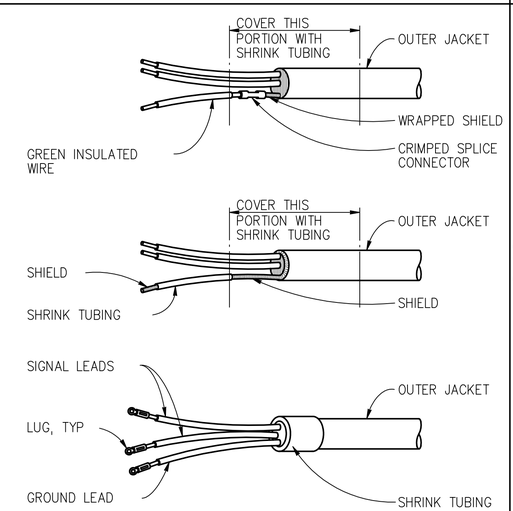

NOTE:
SHIELD GROUNDED
AT TERMINATION.

38 VAR. TERMINATION OF SHIELDED CONTROL CABLE

NOT TO SCALE

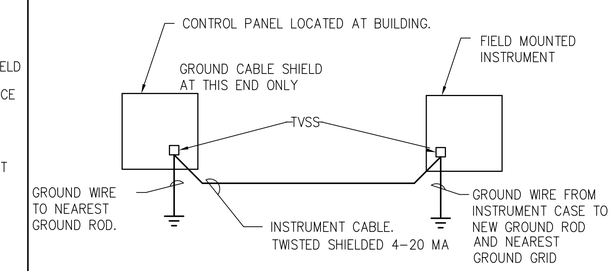

39 VAR. INSTRUMENTATION GROUNDING & SURGE PROTECTION

NOTE: SEE SPEC. SECTIONS

RECORD DRAWINGS

REVISIONS DRAWN BY: E. SMITH DATE: DEC. 2007

THESE RECORD DRAWINGS HAVE BEEN PREPARED, IN PART, ON THE BASIS OF INFORMATION COMPILED BY OTHERS, AND MAY NOT REPRESENT THE EXACT LOCAION, TYPE OF COMPONENT, NOR MANNER OF CONSTRUCTION. THE ENGINEER, OR THE ENGINEER'S REPRESENTATIVE, HAS MADE PERIODIC VISITS TO THE SITE TO OBSERVE THE PROGRESS OF THE EXECUTED WORK. AND HEREBY CERTIFIES, BASED UPON THE KNOWLEDGE DERIVED THERE-FROM AND IN ACCORDANCE WITH THE DEPARTMENT OF PROFESSIONAL REGULATION RULE 21-1-1B.011.(4) THAT THESE RECORD DRAWINGS ACCURATELY REFLECT THE WORK PERFORMED.

NO.	DATE	ISSUED FOR	BY
2	01/08	RECORD DRAWINGS	ES
1	10/03	BID SET	ML

DESIGNED M.E.L.
DRAWN M.E.L.
CHECKED P.F.H.
PROJ. ENGR. P.A.D.

HILLERS ELECTRICAL ENGINEERING, INC.
23257 STATE ROAD 7, SUITE 100
BOCA RATON, FLORIDA 33428
(561) 451-9165
(561) 451-4886 FAX
LICENSE NO: EB 0006877
MARK E. LUTHER P.E.
No. 48801

HAZEN AND SAWYER
Environmental Engineers & Scientists
4000 Hollywood Boulevard, Suite 750N
Hollywood, Florida 33021
Certificate of Authorization Number: 2771

SCALE: AS SHOWN

CONTRACT: 40406
CLIENTS PROJECT:
ENGINEERS PROJECT: 40406
CAD REFERENCE: 40406E36.DWG

CITY OF HALLANDALE BEACH
UTILITIES DEPARTMENT

6 MGD MEMBRANE SOFTENING W.T.P.

ELECTRICAL DETAILS

SHEET 5

DATE: JANUARY 2008
SHEET: 146 OF 162
DRAWING: E-36

9/29/2011 3:46 P.M. - 42 HLND - H:\40406\FIG\TECHMEMOA\40406FIG4-2.dwg - XREFS: - PS 1=1

VENTILATION NOTES

1. THE CONTRACTOR SHALL FURNISH ALL LABOR, MATERIALS, AND EQUIPMENT NECESSARY FOR THE INSTALLATION OF A COMPLETE SYSTEM IN ACCORDANCE WITH THESE DRAWINGS, THE APPLICABLE BUILDING CODE AND ALL OTHER APPLICABLE STATE, COUNTY AND LOCAL ORDINANCES AND THE LATEST ADDITION OF THE FOLLOWING PUBLICATIONS; SMACNA, ASHRAE, NFPA 90A, 90B, 91 & ANSI B-9.1 MECHANICAL REFRIGERATION.
2. THE CONTRACTOR SHALL PAY ALL COSTS OF PERMIT, INSPECTIONS AND ALL OTHER COSTS INCIDENTAL TO THE COMPLETION AND TESTING OF THIS WORK.
3. THE CONTRACTOR SHALL VISIT THE SITE AND COORDINATE WORK WITH OTHER TRADES.
4. THE CONTRACTOR SHALL SUPPLY THE ARCHITECT WITH "AS-BUILT" DRAWINGS.
5. CONTRACTOR SHALL SUBMIT, FOR APPROVAL FIVE [5] COPIES OF MANUFACTURER'S DRAWINGS FOR EACH PIECE OF EQUIPMENT AND CONTROLS INCLUDED IN CONTRACT.
6. ALL MATERIAL SHALL BE NEW OF U.S. MANUFACTURER OF GOOD QUALITY. ALL WORK SHALL BE PERFORMED AT INDUSTRY STANDARD QUALITY LEVEL BY CERTIFIED PROFESSIONALS. ALL EQUIPMENT SHALL BE UL OR ETL LISTED.
7. ALL DUCTWORK SHALL BE GALVANIZED SHEETMETAL WITH SEALED SEAMS AND JOINTS WITH EXTERNAL BLANKET INSULATION R-6 MIN.
   THE HVAC CONTRACTOR SHALL PROVIDE ALL SHEETMETAL DUCTWORK, HANGERS, AUX. SUPPORT STEEL, ETC. ALL FLEX DUCT SHALL BE RATED CLASS I, UL-181 LISTED WITH METALLIZED INNER AND OUTER FOIL LINERS, MIN. R-6 INSULATION.
   ALL METAL DUCTS SHALL BE FABRICATED IN ACCORDANCE WITH LATEST EDITION OF S.M.A.C.N.A.
8. ALL EXHAUST DUCTS AND OUTSIDE AIR DUCTS SHALL BE GALVANIZED SHEET METAL WITH SEALED SEAMS AND JOINTS.
9. DUCT SIZES SHOWN ARE INSIDE DIMENSIONS.
10. ALL AIR DEVICES (DIFFUSERS, REGISTERS AND GRILLES) SHALL BE ALL ALUMINUM CONSTRUCTION WITH EXPOSED SURFACE OFF WHITE BAKED ENAMEL FINISH OR AS SPECIFIED BY ARCHITECT. DEVICES SHALL BE TITUS, METALAIRE, AIRGUIDE. PROVIDE OPPOSED BLADE DAMPERS AT ALL DIFFUSERS AND REGISTERS.
11. THERMOSTAT SHALL BE COMBINATION COOLING/HEATING, WITH SYSTEM "COOL-AUTO-HEAT-OFF" AND FAN "ON-AUTO" SELECTOR SWITCHES. PROVIDE PROGRAMMABLE TYPE AS RECOMMENDED BY MANUFACTURER, HONEYWELL OR EQUAL. PROVIDE TAMPER PROOF COVERS.
12. REFRIGERANT LINES SHALL BE COPPER, TYPE "L" HARD DRAWN WITH WROUGHT COPPER SOLDER-JOINT TYPE FITTINGS, USE 95/5 SOLDER. REFRIGERANT LINES SHALL SIZED AS PER MANUFACTURER RECOMMENDATIONS.
13. 3/4" ARMAFLEX INSULATION SHALL BE USED FOR SUCTION LINES, FILTER/DRYER AND SIGHT GLASS SHALL BE PROVIDED AT LIQUID LINES.
14. ALL BRANCH TAKE-OFFS TO BE PROVIDED W/ MANUAL VOLUME DAMPERS. ALL ELBOWS AND TEE'S MUST BE FURNISHED W/TURNING VANES. PROVIDE MANUAL VOLUME DAMPERS WITH EXTRACTOR AT ALL FLEX TAKE-OFFS.
15. PROVIDE NEW FILTERS FOR ALL AIR CONDITIONING EQUIPMENT BEFORE STARTING THEM. REPLACE THEM PRIOR TO FINAL ACCEPTANCE BY OWNER.
16. PROVIDE SMOKE DETECTORS WITH ACCESS DOORS IN ALL SUPPLY AIR DUCTS FOR FANS AND AHU'S SERVING A COMMON PLENUM OF 2000 CFM OR ABOVE. ALL SMOKE DETECTORS SHALL BE BY ONE MANUFACTURER, COORDINATE VOLTAGE ETC. WITH ELECTRICAL CONTRACTOR AND FIRE ALARM SYSTEM BEFORE ORDERING. UPON DETECTION, SMOKE DETECTORS SHUT DOWN ASSOCIATED AIR MOVING EQUIPMENT AND ALL AIR MOVING EQUIPMENT SERVING THAT COMMON PLENUM.
17. PROVIDE TYPE "B" FIRE DAMPERS IN ALL DUCTS OR OPENINGS PENETRATING FIRE RATED WALLS, MECHANICAL AND ELECTRICAL EQUIPMENT ROOMS, TENANT SEPARATION, PARTITIONS, FLOOR OR ROOF SLABS AND AT O/A INTAKES. PROVIDE RADIATION RADIATION DAMPERS IN RATED CEILINGS FOR ALL CEILING OPENINGS, CEILING FANS, DIFFUSERS OR GRILLES RATED FOR USE IN THE CEILING ASSEMBLY.
18. HVAC CONTRACTOR SHALL PROVIDE A (INDEPENDENT T & B FOR SYSTEMS OVER 15 TONS) T & B REPORT FOR ALL MECHANICAL EQUIPMENT, AIR DEVICES, DAMPERS, AHU'S AND FANS. THE TEST AND BALANCE REPORT SHALL BE IN ACCORDANCE WITH THE AIR BALANCE COUNCIL STANDARDS AND SHALL INCLUDE AIR QUANTITIES FOR ALL SUPPLY GRILLES, RETURN GRILLES AND EXHAUST GRILLES AND THE LEAVING AND ENTERING AIR TEMPERATURE (°F) FROM SUPPLY GRILLES AND EVAPORATORS.
19. THERMOSTAT LOCATION SHALL BE APPROVED BY OWNER AND ENGINEERS BEFORE INSTALLATION. INSTALL 48" A.F.F. PER A.D.A REQUIREMENTS.
20. RUN INSULATED FIRE RATED CONDENSATE DRAINS AS REQUIRED.
21. ALL INSULATION WILL HAVE FIRE/SMOKE RATING LESS THAN 25/50.
22. PROVIDE A MIN. OF 3' CLEARANCE IN FRONT OF ALL 120-240 VOLT PANELS AND 4' CLEARANCE IN FRONT OF ANY 480 VOLT PANEL. PROVIDE ADEQUATE SIDE CLEARANCE PER NEC.
23. MECHANICAL PLANS IN GENERAL, ARE DIAGRAMMATIC IN NATURE, AND ARE TO BE READ IN CONJUNCTION WITH ARCH. PLUMBING, ELECTRICAL AND STRUCTURAL PLANS AND SHALL BE CONSIDERED AS ONE SET OF DOCUMENTS. DUCT AND PIPING OFFSETS, BENDS AND TRANSITIONS WILL BE REQUIRED TO PROVIDE AND INSTALL A COMPLETE FUNCTIONAL SYSTEM AND SHALL BE PROVIDED BY THE CONTRACTOR AT NO ADDITIONAL COST TO THE OWNER.
24. THE CONTRACTOR SHALL VERIFY EXISTING CONDITIONS PRIOR TO BIDDING, ORDERING, FABRICATION OR INSTALLATION OF MATERIALS OR EQUIPMENT.
25. NO COMBUSTIBLE MATERIALS ARE ALLOWED IN RETURN AIR PLENUMS OR ABOVE CEILINGS USED AS RETURN AIR PLENUM. IF SPACE WITH RETURN AIR PLENUM HAS ANY DECK TO DECK PARTITIONS, AIR TRANSFER DUCTS MUST BE INSTALLED.
26. CONDENSATE DRAIN PIPING TO BE TYPE "L" COPPER WITH 1" THICK INSULATION. SUPPLY CONDENSATE PUMP FOR EACH FAN COIL UNIT AND PIPE TO EXISTING CONDENSATE DRAIN.
27. MANUFACTURER'S WARRANTY: CONTRACTOR SHALL PROVIDE WARRANTY FOR A PERIOD OF (1) ONE YEAR AFTER BUILDING C.O. FOR ALL MECHANICAL SYSTEMS, DUCTWORK, CONTROLS ACCESSORIES AND ALL OTHER EQUIPMENT, PARTS AND LABOR UNDER THESE DRAWINGS AND AND SPECIFICATIONS. CONTRACTOR SHALL PROVIDE WARRANTY FOR COMPRESSORS FOR (5) FIVE YEARS. ANY REPAIRS REQUIRING SYSTEM SHUTDOWN WILL BE DONE DURING

VENTILATION SHEET INDEX

V-1	MECHANICAL NOTES AND LEGENDS
V-2	1st FLOOR VENTILATION PLAN
V-3	2nd FLOOR VENTILATION PLAN
V-4	GENERATOR VENTILATION PLAN
V-5	VENTILATION SCHEDULES
V-6	VENTELATION DETAILS
V-7	VENTELATION DETAILS

VENTILATION LEGEND

- SUPPLY AIR CEILING DIFFUSER
- RETURN AIR CEILING GRILLE
- WALL LOUVER / WALL DIFFUSER.
- F.D. — FIRE DAMPER, ALL FIRE DAMPERS SHALL BE FIRE SMOKE DAMPERS
- FSD — FIRE SMOKE DAMPER
- VOLUME CONTROL DAMPER
- T — THERMOSTAT
- H — HUMIDISTAT
- S — REFRIGERANT SENSOR
- REDUCER
- NEW FLEX DUCT
- DUCTWORK
- RETURN OR EXHAUST CEILING REGISTER OR GRILLE
- SUPPLY TOP REGISTER (WALL TYPE)
- RETURN OR EXHAUST TOP REGISTER OR GRILLE WALL TYPE (AIR INTO DEVICES)
- UP — INCLINED RISE IN DIRECTION OF AIR FLOW, FLAT BOTTOM
- DN — INCLINED DROP IN DIRECTION OF AIR FLOW, FLAT BOTTOM
- A / CFM — DIFFUSER OR GRILLE DESIGNATION
- VVT-1 / CFM — ZONE DAMPER
- 1" THICK SOUND INSULATED DUCTWORK
- FC — FLEXIBLE CONNECTION
- UP — SUPPLY & OUTSIDE AIR SECTION (UP)
- DN — SUPPLY & OUTSIDE AIR SECTION (DOWN)
- UP — RETURN & EXHAUST DUCT SECTION (UP)
- DN — RETURN & EXHAUST DUCT SECTION (DOWN)
- VVT — VVT BOX
- EF OR EF — EXHAUST FAN
- RETURN AIR
- U/C — DOOR UNDER CUT
- SUPPLY AIR

RECORD DRAWINGS

KAMM CONSULTING PROJECT #: 2002-0019
PROJECT MANAGER: Darin Frick

KAMM Consulting
947 Clint Moore Rd. Boca Raton, FL 33487
Phone 561.995.8636 Fax 561.995.1623
engineering@kamm.to
Certification of Authorization #1689

DIRECTOR OF ELECTRICAL ENGINEERING
Lon T. Carter Florida License #35249 — 01-31-08 date

DIRECTOR OF MECHANICAL ENGINEERING
Mircea Pella Florida License #48798 — signed

CARTAYA & ASSOCIATES ARCHITECTS P.A.
3077 E. COMMERCIAL BLVD. SUITE 201
FT. LAUDERDALE, FLORIDA 33308
771-2724 FAX 776-4280

NO.	DATE	ISSUED FOR	BY
1	01/08	RECORD DRAWINGS	M.P.

DESIGNED M.P
DRAWN D.F.
CHECKED M.P.
PROJ. ENGR. D.F.

MIRCEA PELLA P.E.
No. #48798

HAZEN AND SAWYER
Environmental Engineers & Scientists
4000 Hollywood Boulevard, Suite 750N
Hollywood, Florida 33021
(954) 987-0066

SCALE 1/8" = 1'-0"

CONTRACT: –
CLIENTS PROJECT:
ENGINEERS PROJECT: 40406
CAD REFERENCE: 40406A-01

H:\40406\001\HallanBch.jpg

CITY OF HALLANDALE BEACH
UTILITIES DEPARTMENT

6 MGD MEMBRANE SOFTENING W.T.P.

NF PROCESS BUILDING

MECHANICAL NOTES AND LEGEND

DATE: JANUARY 2008
SHEET: 147 OF 162
DRAWING: V-1

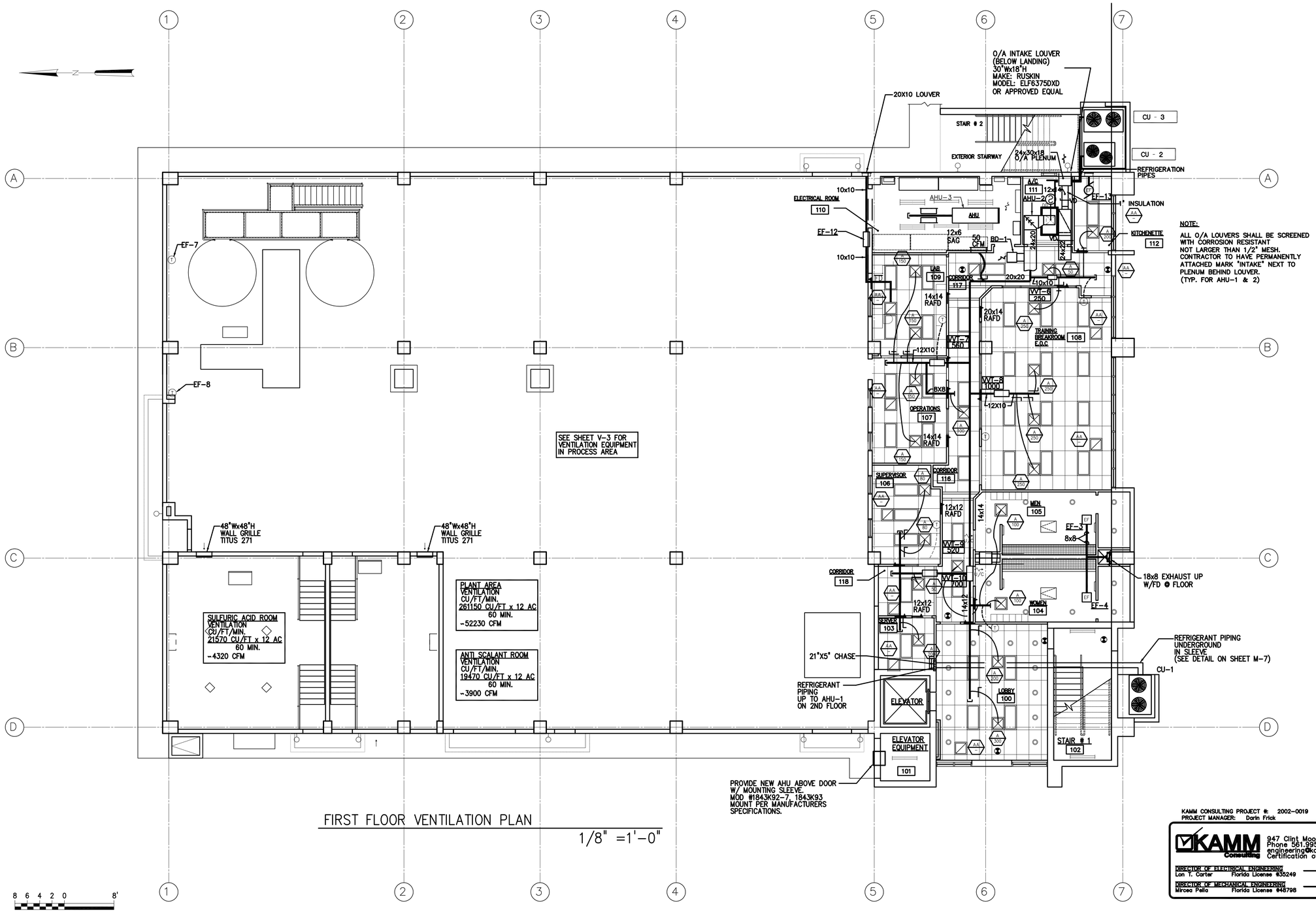

FIRST FLOOR VENTILATION PLAN

1/8" =1'-0"

RECORD DRAWINGS

KAMM CONSULTING PROJECT #: 2002-0019
PROJECT MANAGER: Darin Frick

KAMM Consulting
947 Clint Moore Rd. Boca Raton, FL 33487
Phone 561.995.8638 Fax 561.995.1623
engineering@kamm.to
Certification of Authorization #1689

DIRECTOR OF ELECTRICAL ENGINEERING
Lon T. Carter Florida License #35249 — 01-31-08 date

DIRECTOR OF MECHANICAL ENGINEERING
Mircea Pella Florida License #48798 — signed

CARTAYA & ASSOCIATES
ARCHITECTS P.A.
3077 E. COMMERCIAL BLVD. SUITE 201
FT. LAUDERDALE, FLORIDA 33308
771-2724 FAX 776-4280

NO.	DATE	ISSUED FOR	BY
1	01/08	RECORD DRAWINGS	M.P.

DESIGNED M.P
DRAWN D.F.
CHECKED M.P.
PROJ. ENGR. D.F.

MIRCEA PELLA P.E.
No. #48798

HAZEN AND SAWYER
Environmental Engineers & Scientists
4000 Hollywood Boulevard, Suite 750N
Hollywood, Florida 33021
(954) 987-0066

SCALE 1/8" = 1'-0"

CONTRACT: –
CLIENTS PROJECT:
ENGINEERS PROJECT: 40406
CAD REFERENCE: 40406A-01

H:\40406\001\HallandBch.jpg

CITY OF HALLANDALE BEACH
UTILITIES DEPARTMENT

6 MGD MEMBRANE SOFTENING W.T.P.

NF PROCESS BUILDING

FIRST FLOOR VENTILATION PLAN

DATE: JANUARY 2008
SHEET: 148 OF 162
DRAWING: V-2

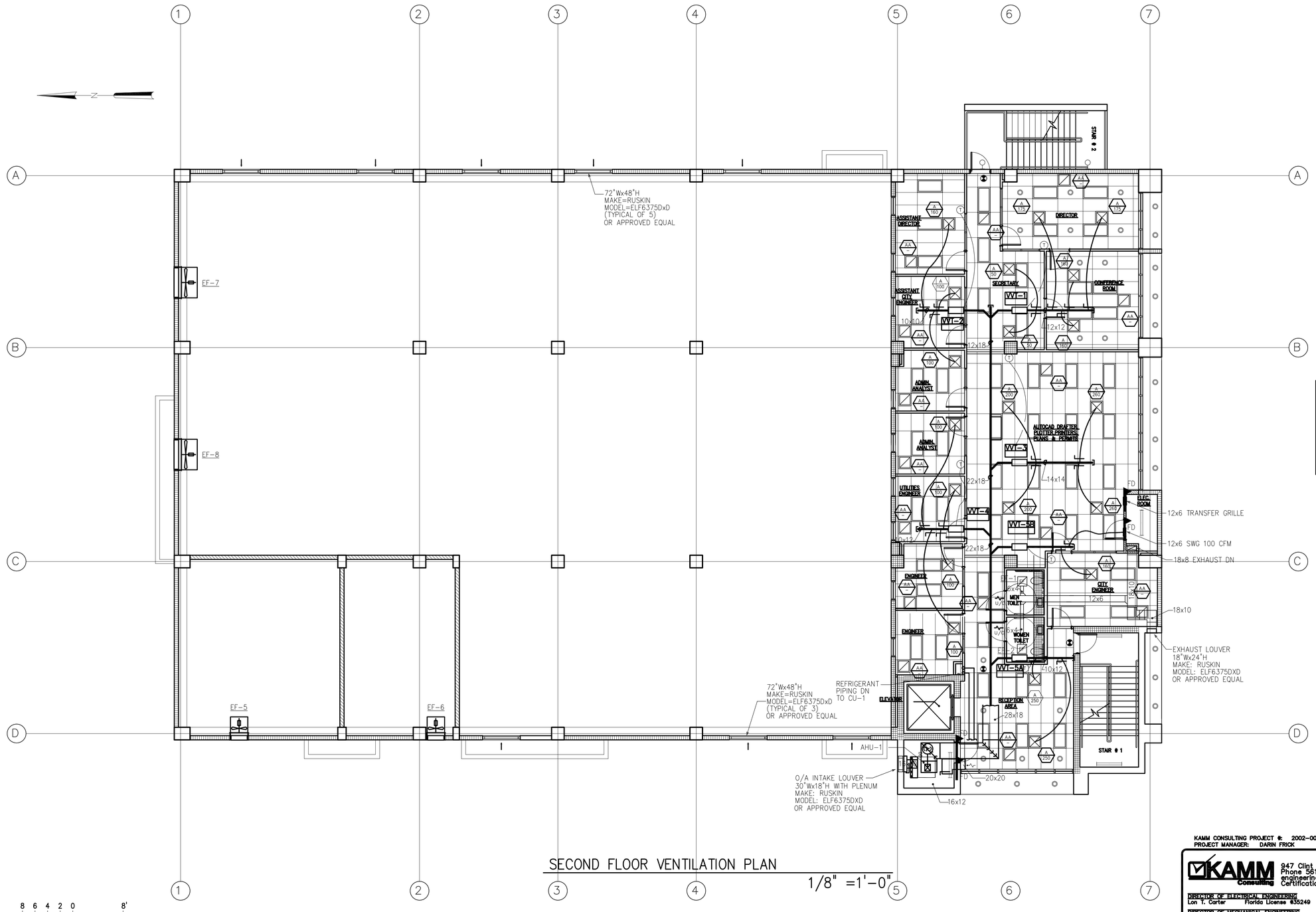

SECOND FLOOR VENTILATION PLAN

1/8" =1'-0"

GENERAL NOTE:

ALL BOXES SHALL HAVE THE MAX. SETPOINT AT NOMINAL CAPACITY TO ALLOW FULLY OPEN POSITION. (TYP.)

RECORD DRAWINGS

CARTAYA & ASSOCIATES ARCHITECTS P.A.

3077 E. COMMERCIAL BLVD. SUITE 201
FT. LAUDERDALE, FLORIDA 33308
771-2724 FAX 776-4280

KAMM CONSULTING PROJECT #: 2002-0019
PROJECT MANAGER: DARIN FRICK

KAMM Consulting
947 Clint Moore Rd. Boca Raton, FL 33487
Phone 561.995.8636 Fax 561.995.1623
engineering@kamm.to
Certification of Authorization #1689

DIRECTOR OF ELECTRICAL ENGINEERING
Lon T. Carter Florida License #35249 — 01-31-08 date

DIRECTOR OF MECHANICAL ENGINEERING
Mircea Pella Florida License #48798 — signed

NO.	DATE	ISSUED FOR	BY
1	01/08	RECORD DRAWING	M.P.

DESIGNED M.P
DRAWN D.F.
CHECKED M.P.
PROJ. ENGR. D.F.

MIRCEA PELLA P.E.
No. #48798

HAZEN AND SAWYER
Environmental Engineers & Scientists
4000 Hollywood Boulevard, Suite 750N
Hollywood, Florida 33021
(954) 987-0066

SCALE 1/8" = 1'-0"

CONTRACT: –
CLIENTS PROJECT:
ENGINEERS PROJECT: 40406
CAD REFERENCE: 40406A-01

H:\40406\001\HallanBch.jpg

CITY OF HALLANDALE BEACH
UTILITIES DEPARTMENT

6 MGD MEMBRANE SOFTENING W.T.P.

NF PROCESS BUILDING

SECOND FLOOR VENTILATION PLAN

DATE: JANUARY 2008
SHEET: 149 OF 162
DRAWING: V-3

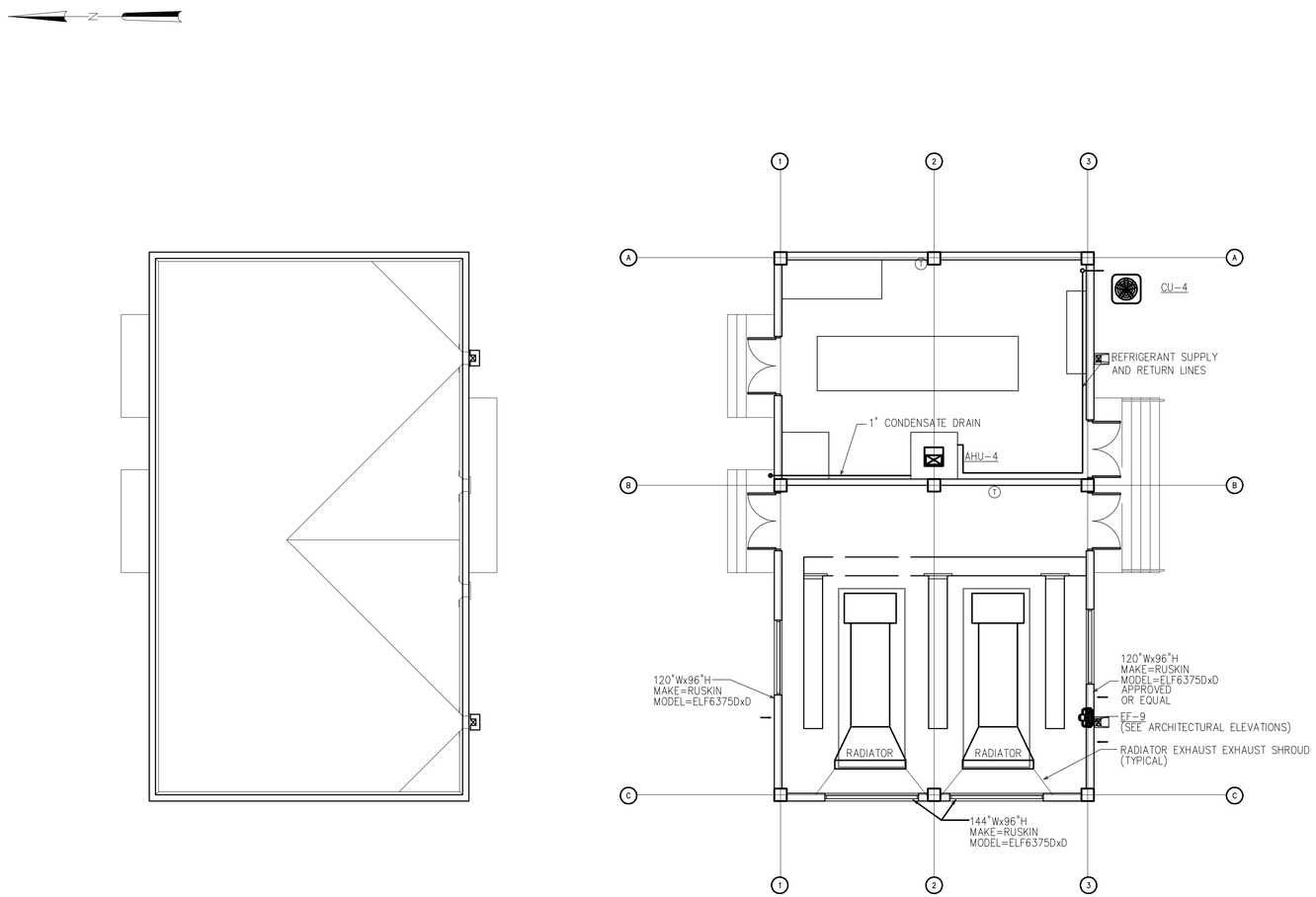

GENERATOR VENTILATION PLAN

1/8" =1'-0"

1/8"=1'-0" 8 6 4 2 0 8'

RECORD DRAWINGS

KAMM CONSULTING PROJECT #: 2002-0019
PROJECT MANAGER: DARIN FRICK

KAMM Consulting
947 Clint Moore Rd. Boca Raton, FL 33487
Phone 561.995.8636 Fax 561.995.1623
engineering@kamm.to
Certification of Authorization #1689

DIRECTOR OF ELECTRICAL ENGINEERING
Lon T. Carter Florida License #35249 — 01-31-08 date

DIRECTOR OF MECHANICAL ENGINEERING
Mircea Pella Florida License #48798 — signed

CARTAYA & ASSOCIATES
ARCHITECTS P.A.
3077 E. COMMERCIAL BLVD. SUITE 201
FT. LAUDERDALE, FLORIDA 33308
771-2724 FAX 776-4280

NO.	DATE	ISSUED FOR	BY
1	01/08	RECORD DRAWINGS	M.P.

DESIGNED M.P
DRAWN D.F.
CHECKED M.P.
PROJ. ENGR. D.F.

MIRCEA PELLA P.E.
No. #48798

HAZEN AND SAWYER
Environmental Engineers & Scientists
4000 Hollywood Boulevard, Suite 750N
Hollywood, Florida 33021
(954) 987-0066

SCALE 1/8" = 1'-0"

CONTRACT: –
CLIENTS PROJECT:
ENGINEERS PROJECT: 40406
CAD REFERENCE: 40406A-01

N:\40406\001\HallandBch.jpg

CITY OF HALLANDALE BEACH
UTILITIES DEPARTMENT

6 MGD MEMBRANE SOFTENING W.T.P.

EMERGENCY GENERATOR BUILDING

GENERATOR VENTILATION PLAN

DATE: JANUARY 2008
SHEET: 150 OF 162
DRAWING: V-4

AIR DISTRIBUTION SCHEDULE

TAG	MANUF. & MODEL	FACE SIZE	NECK SIZE	MATERIAL	FRAME	FINISH	DAMPER	THROW	NC	CFM RANGE	NOTES
A	TITUS TMSA-AA	24x24	PER FLEX	ALUM.	LAY-IN	OFF WHITE	–	4-WAY	MAX. 30	SEE SCH.	1,2,3,4
AA	TITUS 3FL	24x48	22x46	ALUM.	LAY-IN	OFF WHITE	–	–	MAX. 30	SEE SCH.	3

(*) EQUIVALENT MANUFACTURER: TITUS, METALAIRE, CARNES, T & B, NAILOR

GENERAL NOTES:

1. PROVIDE SPIN-IN COLLAR WITH VOLUME DAMPER AT TRUNK TO FLEX DUCT CONNECTION (SEE DETAIL).
2. PROVIDE TYPICAL 4-WAY DIFFUSION, 2-WAY OR 3-WAY ONLY WHERE INDICATED ON PLANS.
3. REFER TO ARCHITECT PLANS FOR CEILING TYPE.
4. FLEX DUCT SIZE TO BE SAME AS DIFFUSER NECK SIZE.

FLEX SCHEDULE	
6ø"	50-125 CFM
8ø"	130-200 CFM
10ø"	205-330 CFM
12ø"	335-450 CFM
14ø"	455-700 CFM

OUTSIDE AIR CALCULATIONS

(PER TABLE 2, ASHRAE 62-89)

AREA SERVED OR UNIT TAG	NET OCCUPIABLE AREA SQ.FT.	MAX. OCCUPANCY P/1000 SQ.FT.	TOTAL NO. OF PEOPLE	VENTILATION RATE CFM/P OR SQ.FT.	TOTAL CFM O/A REQUIRED	NOTES
FIRST FLOOR	2750	7/1000	20	20 CFM/P	700	1
SECOND FLOOR	2976	7/1000	21	20 CFM/P	420	1
TOTAL	–	–	–	–	–	–

1. CALCULATIONS ARE BASED ON ESTIMATED MAX. OCUPPANCY RATES PER ARCHITECTURAL PLANS AND ASHRAE 62-89. VENTILATION RATES PER ASHRAE 62-89.
2. FOR ASSEMBLY ROOMS, CONFERENCE ROOMS AND OTHER SIMILAR AREAS CALCULATIONS ARE BASED ON INTERMITTENT OR VARIABLE OCCUPANCY IN CONFORMITY WITH PAR. 6.1.3.4 OF ASHRAE 62-89.
3. FOR OFFICE AND OTHER SIMILAR AREAS CALCULATIONS ARE BASED ON CONTINUOUS OCCUPANCY

AIR BALANCE SCHEDULE

AREA SERVED	EQUIPMENT TAG	SUPPLY AIR (CFM)	RETURN AIR (CFM)	OUTSIDE AIR (CFM)	MAKE-UP AIR (CFM)	EXHAUST AIR (CFM)
2ND FLOOR OFFICES	AHU-1	3200	X	800	X	120
1ST FLOOR OFFICES	AHU-2	3750	X	800	X	660
1ST FLOOR ELEC. RM.	AHU-3	3750	X		X	X
TOTAL	X		X	1600	X	780

NOTES:

1. BUILDING IS 1600-780=820 POSITIVE WHEN ALL EXHAUST FANS OPERATING

EXHAUST AIR CALCULATIONS

SPACE SERVED OR UNIT TAG	SPACE AREA (SQ.FT.)	SPACE HEIGHT (FT)	SPACE VOLUME (CU.FT.)	VENTILATION REQ'D AC/HR OR CFM/SF	TOTAL CFM PROVIDED	NOTES
EF-1 2ND FL MEN	43	10'	430	7.5 AC/HR	60	X
EF-2 2ND FL WOMEN	45	10'	450	7.5 AC/HR	60	X
EF-3 1ST FL MEN	263	10'	2630	7.5 AC/HR	330	X
EF-4 1ST FL WOMEN	263	10'	2630	7.5 AC/HR	330	X

NOTES:

1. CALCULATIONS ARE BASED ON LOCAL CODE REQUIREMENTS (S.F.B.C.) AND ASHRAE 62-89
2. CALCULATIONS ARE BASED ON CONTINUOUS OCCUPANCY AND OPERATION

EVEVATOR EQUIPMENT ROOM #101 – A/C UNIT SCHEDULE

TAG	MANUF. & MODEL	BTU/HR	EER	CFM	AMPS	VOLTAGE	NEMA PLUG	DIMENSIONS	NOTES
AC-1	FRIEDRICH	13,500	9.5:1	295	12	115/1/60	5-15	17X27X23	1,2,3,4

(*) WITH MOUNTING SLEEVE FOR THROUGH-THE-WALL INSTALLATION

FEATURES:

1. ADJUSTABLE THERMOSTAT
2. ADJUSTABLE LOUVERS
3. SLIDE-OUT CHASSIS
4. 6-FOOT LONG POWER CORD
5. UL AND C-UL LISTED
6. REMOTE CONTROL

FAN SCHEDULE

SELECTION DATA					FAN DATA			MOTOR DATA				GENERAL DATA				
TAG	SERVICE AREA	MANUF.(*)	MODEL	CONFIG.	CFM	ESP ("WG)	SONES	HP/WATTS	RPM	DRIVE	VOLTAGE	WEIGHT (LBS)	DIMENSIONS L"xW"xH"	OPENING L"xW"	CONTROL	ACCESSORIES
EF-1	MEN'S TOILET (2ND FLOOR)	GREENHECK	SP-6.5	CEILING	60	.375	3.0	50	700	DIRECT	120/1/60	10	14x11x7	–	LIGHT SWITCH	*
EF-2	WOMEN'S TOILET (2ND FLOOR)	GREENHECK	SP-6.5	CEILING	60	.375	3.0	50	700	DIRECT	120/1/60	10	14x11x7	–	LIGHT SWITCH	*
EF-3	MEN'S TOILET (1ST FLOOR)	GREENHECK	SP-252	CEILING	330	.50	4.7	224	1070	DIRECT	120/1/60	31	18x15x12	–	LIGHT SWITCH	*
EF-4	WOMEN'S TOILET (1ST FLOOR)	GREENHECK	SP-252	CEILING	330	.50	4.7	224	1070	DIRECT	120/1/60	31	18x15x12	–	LIGHT SWITCH	*
EF-5	SULFURIC ACID ROOM	GREENHECK	SB-1-24-3	WALL MOUNTED	4320	.20	14.1	1/3	759	BELT DRIVE	120/1/60	70	33x32x32	–	ON/OFF SWITCH	*
EF-6	ANTI-SCALANT ROOM	GREENHECK	SB-1-24-3	WALL MOUNTED	3900	.20	14.1	1/3	759	BELT DRIVE	120/1/60	70	33x32x32	–	ON/OFF SWITCH	*
EF-7	PLANT AREA	GREENHECK	SB-2H54-20	WALL MOUNTED	26115	.20	22	2	414	BELT DRIVE	460/3/60	590	62x62x62	–	THERMOSTAT	*
EF-8	PLANT AREA	GREENHECK	SB-2H54-20	WALL MOUNTED	26115	.20	22	2	414	BELT DRIVE	460/3/60	590	62x62x62	–	THERMOSTAT	*
EF-9	GENERATOR ROOM	GREENHECK	SB-1-24-3	WALL MOUNTED	3900	.20	14.1	1/3	759	BELT DRIVE	120/1/60	70	33x32x32	–	THERMOSTAT	*
EF-10	SEQUESTERANT ROOM	GREENHECK	SB-1-24-4	WALL MOUNTED	1615	.20	9.8	1/4	674	BELT DRIVE	120/1/60	70	20X32X32	–	ON/OFF SWITCH	PROVIDED BY OWNER, INSTALLED IN ADJACENT BLD., SEE STRUCTRUAL DWGS.
EF-11	SODIUM HYDROXIDE ROOM	GREENHECK	SB-1-24-4	WALL MOUNTED	1615	.20	9.8	1/4	674	BELT DRIVE	120/1/60	70	20X32X32	–	ON/OFF SWITCH	
EF-12	LAB ROOM	GREENHECK	CSP-252	INLINE	300	0.5	4.7	224	1070	DIRECT	120/1/60	31	18x15x12	–	ON/OFF SWITCH	*
EF-13	KITCHENETTE	GREENHECK	SP-6.5	CEILING	60	.375	3.0	50	700	DIRECT	120/1/60	10	14x11x7	–	LIGHT SWITCH	*

(*) APPROVED EQUAL MANUFACTURER: COOK, PENN, ACME

ACCESSORIES NOTES:

1. PROVIDE GRILLE COLOR PER ARCH. SPECS
2. PROVIDE BACKDRAFT DAMPER
3. PROVIDE FACTORY MOUNTED DISCONNECT SWITCH
4. PROVIDE MINIMUM TWO BELTS
5. PROVIDE BIRD SCREEN
6. LOCATE BACKDRAFT DAMPER AT DISCHARGE
7. SUPPORT FROM STRUCTURE COMPLETE WITH VIBRATION ISOLATORS

GENERAL FAN NOTES:

1. MOTOR STARTERS, DISCONNECTS AND ALL EQUIPMENT NORMAL POWER WIRING BY ELEC. CONTRACTOR.
2. FIELD ADJUST OPENINGS WITH STRUCTURE.
3. ALL OUTDOOR EQUIPMENT SHALL COMPLY WITH LOCAL ZONING NOISE ORDINANCE OR NOT EXCEED A NOISE LEVEL OF 65dB AS MEASURED RADIALLY 30 FT. FROM THE EQUIPMENT IN ALL DIRECTIONS.
4. COORDINATE WITH ELECTRICAL CONTRACTOR BEFORE BIDDING OR ORDERING ANY EQUIPMENT.
5. SEE PROJECT PLANS AND SPECIFICATIONS FOR OTHER FIELD SUPPLIED ITEMS AND ADDITIONAL INFORMATION.

AIR CONDITIONING SPLIT SYSTEM EQUIPMENT SCHEDULE

CONDENSING UNIT

CU TAG	MANUFACTURER & MODEL	NOMINAL TONNAGE	CAPACITY STAGES	EER/IPLV	REFRIG./LBS	LIQ./SUCT.	NO. FANS	FAN FLA(EA)	NO. COMP.	COMPRESSOR FLA/LRA	VOLTAGE/PH	MCA/MOCP	WEIGHT (LBS)	LxWxH (IN)	NOTES
CU-1	CARRIER 38ARZ012	10.0	2	10.3	R-22/23	1/2 / 1-3/8	2	0.7	1	17.2/125	460/3/60	22.9/30	430	60x46x30	*
CU-2	CARRIER 38AKS014	12.5	2	10.4/12.7	R-22/23	5/8 / 1-3/8	2	2.3/1.9	1	22.1/80	460/3/60	31.7/50	779	76x43x40	*
CU-3	CARRIER 38AKS014	12.5	2	10.4/12.7	R-22/23	5/8 / 1-3/8	2	2.3/1.9	1	22.1/80	460/3/60	31.7/50	779	76x43x40	*
CU-4	CARRIER 38CKC060-6	5.0	1	10.0/10.0	R-22/23	3/8 / 1-1/8	1	0.8	1	8.0/66.5	460/3/60	10.8/15	231	30x30x36	*

AIR HANDLING UNIT

AHU TAG	MANUFACTURER & MODEL	TOTAL MBH	SENSIBLE MBH	TOTAL CFM	O/A CFM	E.S.P.("W.G.)	ENT. DB/WB	LEAV. DB/WB	ROWS/FPI	FAN HP/FLA	HEATER KW	VOLTAGE/PH	MCA/MOCP	WEIGHT (LBS)	LxWxH (IN)	NOTES
AHU-1	CARRIER 40RM012	111.0	99.6	3200	800	.75	76/64	55/54	3/15	2.4/2.6	15	460/3/60	27/30	405	49x29x57	*
AHU-2	CARRIER 40RM014	125.0	95.6	3750	800	.75	76/64	55/54	3/15	2.4/3.4	15	460/3/60	27/30	670	89x29x57	*
AHU-3	CARRIER 40RM014	125.0	95.6	3750	N/A	.50	76/64	55/54	3/15	2.4/3.4	N/A	460/3/60	4.3/15	670	89x57x29	*
AHU-4	CARRIER FA4ANF060	54.5	44.7	2000	N/A	.50	76/64	55/54	3/15	0.75/5.4	N/A	208/1/60	6.8/15	168	21x22x54	*

NOTES:

1. UNITS RATED PER ARI 210, 240 AND 270, APPROVED EQUAL: AAON, CARRIER, LENNOX, TRANE
2. PROVIDE WITH THERMAL EXPANSION VALVES, LIQUID LINE FILTER DRYER AND MULTI-USE SERVICE VALVES
3. PROVIDE COMPRESSOR WITH CRANKCASE HEATER AND MIN. 5-YEAR WARRANTY
4. PROVIDE HIGH AND LOW PRESSURE CONTROL AND OVER TEMPERATURE PROTECTION.
5. PROVIDE WEATHERPROOF ELECTRIC CONTROLS AND SINGLE SIDE SERVICE ACCESS
6. PROVIDE SINGLE POINT POWER ENTRY AND HEAVY DUTY NICKEL-CHROMIUM ELEMENT HEATER
7. PROVIDE 2" THROWAWAY, MIN. 30% EFF. FILTER AND VIBRATION ISOLATION FOR AHU
8. PROVIDE SPLIT FACE COIL WITH BOTTOM OF COIL ACTIVE FOR MULTIPLE CIRCUIT SYSTEM
9. PROVIDE COASTAL CORROSION PROTECTION FOR CONDENSING UNIT, FULLY DIPPED COIL (BY MANUFACTURER)
10. PROVIDE FACTORY MOUNTED DISCONNECT/STARTER FOR A.H.U., COORDINATE PRIOR TO PURCHASING
11. PROVIDE DISCONNECT/STARTER BY CONTRACTOR FOR C.U., COORDINATE PRIOR TO PURCHASING
12. PROVIDE EMERGENCY POWER, COORDINATE WITH ELECTRICAL
13. PROVIDE FACTORY THERMOSTAT TO MATCH CAPACITY STAGES (PROGRAMMABLE IF REQUIRED)
14. PROVIDE REFRIGERANT LINES SIZE AS RECOMMENDED BY MANUFACTURER, NOT TO EXCEED 150 FT. EQUIV. LENGTH FOR LONGER RUNS COORDINATE WITH MANUFACTURER PRIOR TO PURCHASE OR ANY WORK.

COORDINATION NOTE:

MECHANICAL CONTRACTOR SHALL COORDINATE ALL ELECTRICAL REQUIREMENTS AND ACCESSORIES WITH ELECTRICAL CONTRACTOR PRIOR TO PURCHASING AND INSTALLATION AND SHALL BRING ANY DISCREPANCIES TO THE ATTENTION OF ENGINEER

VVT BOX UNIT SCHEDULE

SELECTION DATA					PRIMARY AIR DATA				HEATER DATA		GEN. DATA			
	UNIT TAG	MANUF. & MODEL	TYPE	INLET DIA.	MIN. CFM	MAX. CFM	REQ'D CFM	MIN. Ps(")	KW	STEPS	VOLTAGE	LxWxD(")	WEIGHT(LB)	NOTES
2ND FLOOR	VVT-1	CARRIER-33CS	SGL. DUCT	12"ø	150	1000	775	.12	–	–	120/1/60	24x12x17	35	1,2
	VVT-2	CARRIER-33CS	SGL. DUCT	12"ø	150	1000	640	.12	–	–	120/1/60	24x12x17	35	1,2
	VVT-3	CARRIER-33CS	SGL. DUCT	16"ø	250	1400	1125	.14	–	–	120/1/60	24x16x21	35	1,2
	VVT-4	CARRIER-33CS	SGL. DUCT	12"ø	150	1000	520	.12	–	–	120/1/60	18x12x15	35	1,2
	VVT-5A	CARRIER-33CS	SGL. DUCT	12"ø	150	1000	810	.12	–	–	120/1/60	24x12x17	35	1,2
	VVT-5B	CARRIER-33CS	SGL. DUCT	8"ø	150	1000	370	.12	–	–	120/1/60	18x8x13	35	1,2
1ST FLOOR	VVT-6	CARRIER-33CS	SGL. DUCT	12"ø	150	1000	630	.12	–	–	120/1/60	24x12x17	35	1,2
	VVT-7	CARRIER-33CS	SGL. DUCT	10"ø	150	1000	500	.12	–	–	120/1/60	18x10x15	35	1,2
	VVT-8	CARRIER-33CS	SGL. DUCT	14"ø	250	1400	960	.14	–	–	120/1/60	24x14x19	35	1,2
	VVT-9	CARRIER-33CS	SGL. DUCT	8"ø	150	1000	370	.12	–	–	120/1/60	18x8x13	35	1,2
	VVT-10	CARRIER-33CS	SGL. DUCT	12"ø	150	1000	840	.12	–	–	120/1/60	24x12x17	35	1,2

NOTES:

1. CONTROLS TO BE DDC, PROVIDE ROOM THERMOSTAT/SENSOR WITH OVERRIDE CAPABILITY
2. POWER BY DIV. 16. CONTROL WIRING BY CONTROL CONTRACTOR. CONTROL POWER TRANSFORMER BY VVT MANUFACTURER.

RECORD DRAWINGS

KAMM CONSULTING PROJECT #: 2002-0019
PROJECT MANAGER: DARIN FRICK

KAMM Consulting
947 Clint Moore Rd. Boca Raton, FL 33487
Phone 561.995.8636 Fax 561.995.1623
engineering@kamm.to
Certification of Authorization #1689

DIRECTOR OF ELECTRICAL ENGINEERING
Lon T. Carter Florida License #35249 — 01-31-08 date

DIRECTOR OF MECHANICAL ENGINEERING
Mircea Pella Florida License #48798 — signed

CARTAYA & ASSOCIATES ARCHITECTS P.A.
3077 E. COMMERCIAL BLVD. SUITE 201
FT. LAUDERDALE, FLORIDA 33308
771-2724 FAX 776-4280

NO.	DATE	ISSUED FOR	BY
1	01/08	RECORD DRAWINGS	M.P.

DESIGNED M.P
DRAWN D.F.
CHECKED M.P.
PROJ. ENGR. D.F.

MIRCEA PELLA P.E.
No. #48798

HAZEN AND SAWYER
Environmental Engineers & Scientists
4000 Hollywood Boulevard, Suite 750N
Hollywood, Florida 33021
(954) 987-0066

SCALE 1/8" = 1'-0"

CONTRACT: –
CLIENTS PROJECT:
ENGINEERS PROJECT: 40406
CAD REFERENCE: 40406A-01

H:\40406\001\HallandBch.jpg

CITY OF HALLANDALE BEACH
UTILITIES DEPARTMENT

6 MGD MEMBRANE SOFTENING W.T.P.

NF PROCESS BUILDING

VENTILATION SCHEDULES

DATE: JANUARY 2008
SHEET: 151 OF 162
DRAWING: V-5

ZONE DAMPER SELECTION TABLE	
VVT DAMPER SIZE	VVT DAMPER CFM
	800 FPM
6" DIA.	157
8" DIA.	279
10" DIA.	436
12" DIA.	628
14" DIA.	855
16" DIA.	1116

TAG	MAKE	MODEL	CFM SET
VVT-1	CARRIER	–	–
VVT-2	CARRIER	–	–
VVT-3	CARRIER	–	–
VVT-4	CARRIER	–	–
VVT-5	CARRIER	–	–
VVT-6	CARRIER	–	–
VVT-7	CARRIER	–	–
VVT-8	CARRIER	–	–
		TOTAL CFM	–

QTY 1 MONITOR THERMOSTAT 33CSVMT-16
IN VVT/MONITOR MODE

QTY 1/4 SLAVE THERMOSTATS 33CSZC

BYPASS DAMPER (BYPASS) 3000 CFM

USE 1 35EV VAV-1 SIZE 14 WITH HIGH TORQUE ACTUATOR.
INCLUDE BYPASS CONTROLLER AND PRESSURE SENSOR
SIZE: 20" WIDE 17 HIGH AND DEEP 15 1/2"

CARRIER TO PROVIDE 24 VOLT TRANSFORMERS FOR ALL ZONE AND BYPASS DAMPERS.

VVT & BYPASS DAMPERS – RTU-7

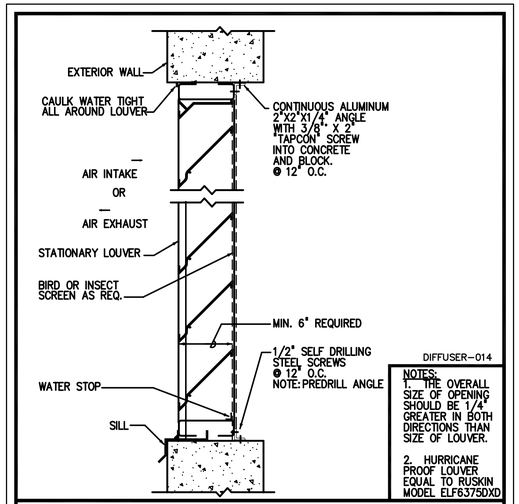

DIFFUSER-014

NOTES:
1. THE OVERALL SIZE OF OPENING SHOULD BE 1/4" GREATER IN BOTH DIRECTIONS THAN SIZE OF LOUVER.
2. HURRICANE PROOF LOUVER EQUAL TO RUSKIN MODEL ELF6375DXD

AIR INTAKE LOUVER DETAIL
NOT TO SCALE

CCS GENERAL INSTALLATION NOTES:

WIRE REQUIRMENTS

SHIELDED WIRE:

2-WIRE – 20 GAUGE STRANDED COLOR CODED CABLE
TWO CONDUCTOR (RED, BLACK) UL W/SHIELD.

3-WIRE – 20 GAUGE STRANDED COLOR CODED CABLE
THREE CONDUCTOR (RED, BLACK, GREEN) UL W/SHIELD.

5-WIRE – 20 GAUGE STRANDED COLOR CODED CABLE
FIVE CONDUCTOR (RED, WHITE, BLUE, YELLOW, GREEN) UL W/SHIELD.

PLENUM RATED WIRE:

3-WIRE – 20 GAUGE STRANDED COLOR CODED CABLE (CL2P)
THREE CONDUCTOR (RED, BLACK, GREEN) UL W/PLENUM RATED JACKET & SHIELD.

5-WIRE – 20 GAUGE STRANDED COLOR CODED CABLE (CL2P)
FIVE CONDUCTOR (RED, WHITE, BLUE, YELLOW, GREEN) UL W/PLENUM RATED JACKET & SHIELD.

COMPONENT POWER REQUIRMENTS

DEVICE:	TRANSFORMER (VA SPECS)
TEMP SYSTEM (MONITOR STAT & (33CSUCE-06) RELAY PACK)	10 VA
NETWORK ACCESS MODULE (NAM)	25 VA
ZONE DAMPER (MONITOR STAT, BYPASS CONTROLLER, OR ZONE CONTROLLER, & DAMPER)	20 VA
ZONE DAMPER W/SUPPLEMENTAL HEAT RELAY (STAT, DAMPER & RELAY PACK)	25 VA
MONITOR STAT (MONITOR STAT, DAMPER & (CHR06 OR CHR06W) RELAY PACK)	25 VA
PRESSURE SENSORS – PS--01 (7.5 TONS OR LESS) & PS--02 (ABOVE 7.5 TONS)	5 VA
REMOTE DUCT SENSOR (RDS)	0 VA
REMOTE ROOM SENSOR (RRS)	0 VA
HUMIDITY SENSOR (HS)	5 VA

** NOTE: BRIDGES AND REPEATERS REQUIRE 24VDC / 400 mA TRANSFORMERS. PART # 34CCN-24-400 **

TRANSFORMERS
(UL 24VAC/50VA)
(UL 24VAC/75VA)

NOTE: MAXIMUM OF TWO DAMPERS PER TRANSFORMER.

INSTALLATION NOTES

WIRE:

1. DO NOT RUN 3-WIRE COMMUNICATION BUS & 5-WIRE IN THE SAME CONDUIT FOR MORE THAN (5) FIVE FEET. ALSO, DO NOT RUN COMMUNICATION BUS OR CONTROLS WIRING IN CONDUIT WITH ANY OTHER WIRING.
2. ALL COMMUNICATION BUS WIRING SHALL BE RUN IN A DAISY CHAIN CONFIGURATION FROM STAT TO STAT.
3. NO T-TAPPING, SPLICING OR WIRE NUTS ARE TO BE USED ON COMMUNICATION BUS. (WIRE NUTS ARE ONLY ALLOWED WHEN TERMINATING THE 5-WIRE TO THE DAMPER ACTUATOR).
4. ALL CONTROLS WIRING WILL BE ONE CONTINUOUS RUN FROM DEVICE TO DEVICE, (NO BREAKS, TAPS OR SPLICES).
5. ALL COMMUICATION BUS TERMINATIONS SHALL BE MADE AT THE DEVICE CONNECTOR BLOCK.
6. NEVER RUN ANY CONTROLS WIRING WITHIN 12 INCHES OF ANY AC VOLTAGE. (THIS INCLUDES ANY HIGH VOLTAGE, 24VAC LOW VOLTAGE, AND FLORESCENT LIGHT PANELS).
7. DO NOT STRIP BACK WIRES MORE THAN 1/4" FOR TERMINATIONS AT CONNECTOR BLOCK. (THIS WILL PREVENT SHORTS).
8. LONG RUNS OF WIRE WILL RESULT IN VOLTAGE DROP. MAKE SURE YOU HAVE SUFFICIENT 24VAC OR USE LARGER WIRE FOR ADEQUATE 24VAC AT CONTROLS.

ZONE STAT LOCATION:	ZONE STAT ADDRESSING:	ADDRESSING EXAMPLE:
ZONE STAT SHOULD BE LOCATED: 1. APPROX. 5' FROM FLOOR 2. ON AN INTERIOR WALL. 3. WHERE IT WILL OBTAIN READINGS REPRESENTATIVE OF THE ZONE TEMPERATURE. DO NOT INSTALL ZONE CONTROLLER: 1. WHERE SUPPLY AIR WILL BLOW DIRECTLY ON IT. 2. IN DIRECT SUNLIGHT. 3. OVER HEAT GENERATING DEVICES.	1. MONITOR STAT MUST HAVE HIGHEST ADDRESS. 2. NO TWO DEVICES CAN SHARE THE SAME ADDRESS. 3. BYPASS CONTROLLER SHOULD BE ADDRESSED ONE LESS THAN THE MONITOR STAT. 4. SEE EXAMPLE TO THE RIGHT FOR EXAMPLE OF MULTIPLE SYSTEM ADRESSING.	9 MONITOR STAT 8 BYPASS CONTROLLER 7 ZONE CONTROLLER (NEXT SYSTEM) 6 MONITOR STAT 5 BYPASS CONTROLLER 4 ZONE CONTROLLER (NEXT SYSTEM) 3 MONITOR STAT 2 BYPASS CONTROLLER 1 ZONE CONTROLLER

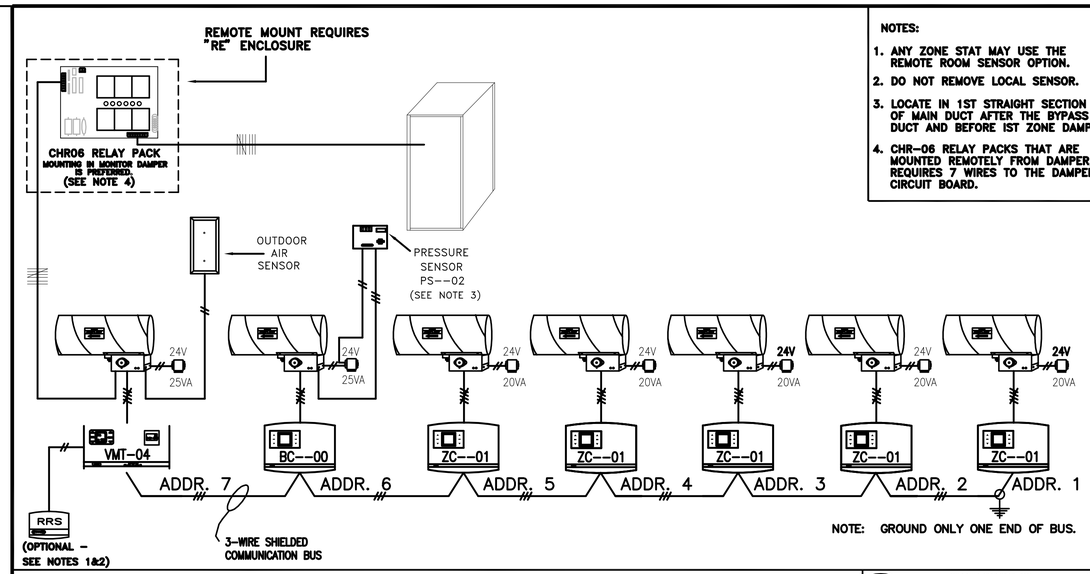

NOTES:
1. ANY ZONE STAT MAY USE THE REMOTE ROOM SENSOR OPTION.
2. DO NOT REMOVE LOCAL SENSOR.
3. LOCATE IN 1ST STRAIGHT SECTION OF MAIN DUCT AFTER THE BYPASS DUCT AND BEFORE 1ST ZONE DAMPER.
4. CHR-06 RELAY PACKS THAT ARE MOUNTED REMOTELY FROM DAMPER, REQUIRES 7 WIRES TO THE DAMPER CIRCUIT BOARD.

TYPICAL CCS – VVT WIRING DIAGRAM

CARRIER CORPORATION
SHEET TITLE: TYPICAL CCS – VVT WIRING DIAGRAM | SHT 1/1
DWG: CCS.DWG | DATE: 04/09/96 | BY: JOHN JOLLY | REV #: A

BYPASS CONTROLLER & PS DIAGRAM

NOTES:
1. The PSP-00 should be located in an area of uniform airflow. 5 duct diameters downstream of the damper in laminar flowarea.
2. The PSP-00 should be located in the supply-air duct after the system's bypass damper, but before the first branch duct.
3. If locating the PSP-00 in the previously described area is not feasible, an alternate location may be used. In special case, locate the PSP-00 approximately 2/3 the distance from the supply-air fan to the end of the main trunk duct.

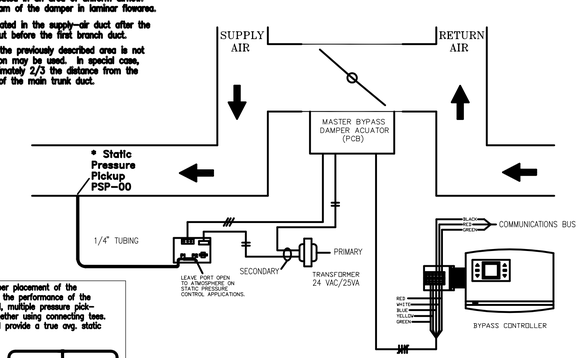

* For applications where proper placement of the PSP-00 is not possible or the performance of the PSP-00 must be enhanced, multiple pressure pick-ups can be manifolded together using connecting tees. This type of installation will provide a true avg. static pressure sampling.

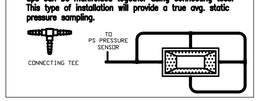

CARRIER CORPORATION
TITLE: BYPASS CONTROLLER & PS DIAGRAM | SHT 1/1
DWG #: CCSBYP.DWG | DATE: 07/09/96 | BY: JOHN JOLLY | REV #:

RECORD DRAWINGS

KAMM CONSULTING PROJECT #: 2002-0019
PROJECT MANAGER: DARIN FRICK

KAMM Consulting
947 Clint Moore Rd. Boca Raton, FL 33487
Phone 561.995.8638 Fax 561.995.1623
engineering@kamm.to
Certification of Authorization #1689

DIRECTOR OF ELECTRICAL ENGINEERING
Lon T. Carter Florida License #35249 — 01-31-08 date

DIRECTOR OF MECHANICAL ENGINEERING
Mircea Pella Florida License #48798 — signed

CARTAYA & ASSOCIATES ARCHITECTS P.A.
3077 E. COMMERCIAL BLVD. SUITE 201
FT. LAUDERDALE, FLORIDA 33308
771-2724 FAX 776-4280

NO.	DATE	ISSUED FOR	BY
1	01/08	RECORD DRAWINGS	M.P.

DESIGNED M.P
DRAWN D.F.
CHECKED M.P.
PROJ. ENGR. D.F.

MIRCEA PELLA P.E.
No. #48798

HAZEN AND SAWYER
Environmental Engineers & Scientists
4000 Hollywood Boulevard, Suite 750N
Hollywood, Florida 33021
(954) 987-0066

SCALE 1/8" = 1'-0"

CONTRACT: –
CLIENTS PROJECT:
ENGINEERS PROJECT: 40406
CAD REFERENCE: 40406A-01

H:\40406\201\HallandBch.jpg

CITY OF HALLANDALE BEACH
UTILITIES DEPARTMENT

6 MGD MEMBRANE SOFTENING W.T.P.

NF PROCESS BUILDING
VENTILATION DETAILS

DATE: JANUARY 2008
SHEET: 152 OF 162
DRAWING: V-6

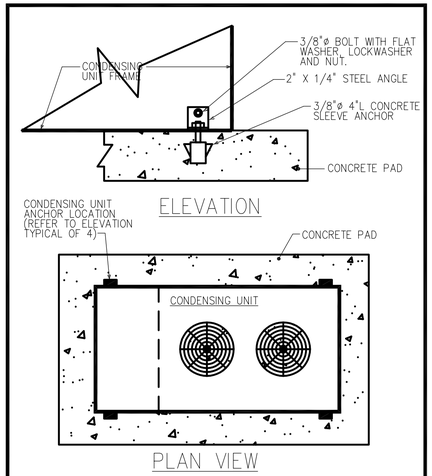

CONDENSING UNIT MOUNTING DETAIL
NOT TO SCALE

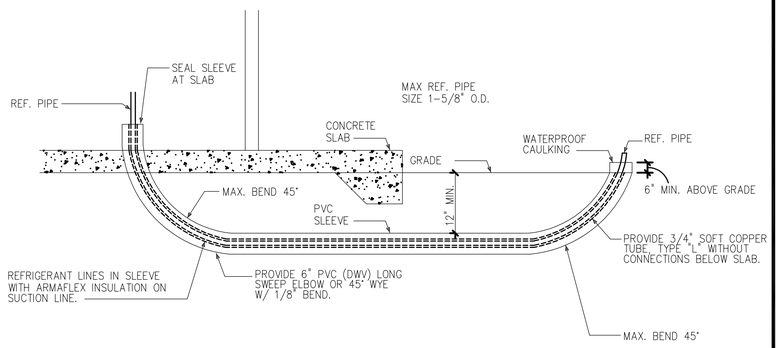

UNDER SLAB REFRIGERANT PIPING DETAIL
NOT TO SCALE

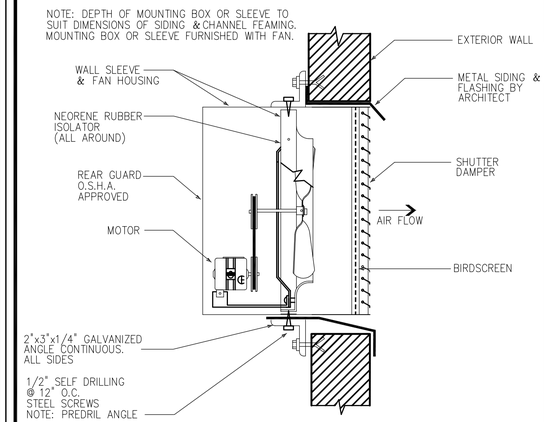

WALL FAN DETAIL
NOT TO SCALE

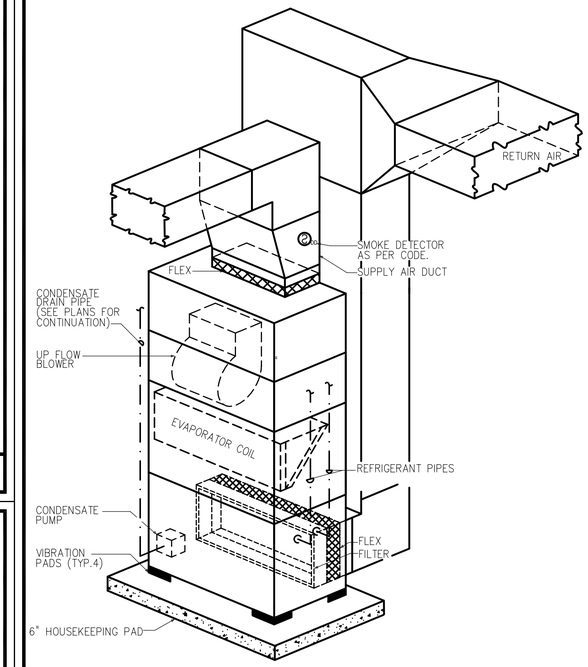

VERTICAL A/C UNIT
NOT TO SCALE

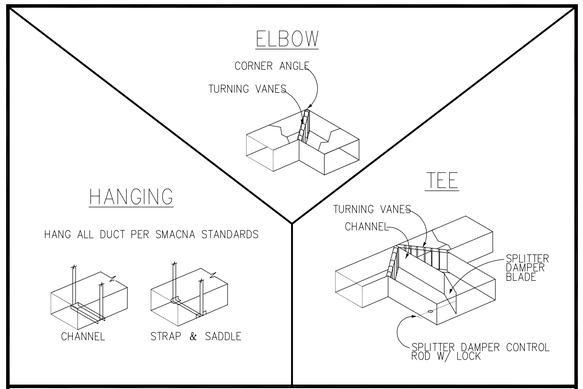

HVAC DUCT DETAILS
NOT TO SCALE

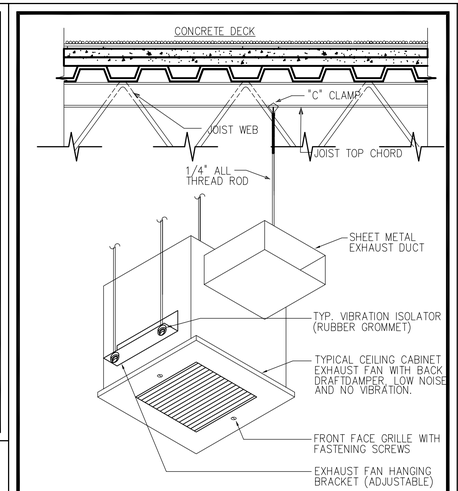

CABINET FAN DETAIL
NOT TO SCALE

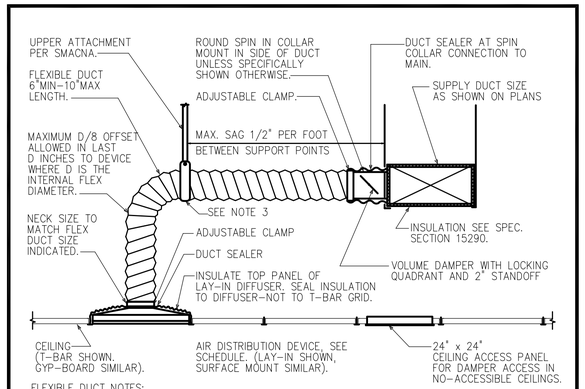

FLEXIBLE DUCT NOTES:

1. FLEXIBLE DUCTS SHALL BE ONE-PIECE AND SHALL NOT BE SPLICED TOGETHER.
2. EXTEND FLEXIBLE DUCT INSULATION TO DUCT/DIFFUSER PANEL INSULATION AND SEAL WITH MASTIC.
3. MINIMUM 1" WIDE 22 GALVANIZED STRAP HANGER WITH HEMMED EDGES PER SMACNA. FIGURE 3-10
4. FLEXIBLE AIR DUCT SHALL BE FULLY EXTENDED AND NOT COMPRESSED WITH ELBOW RADIUS NOT LESS THAN R/D =1.0.
5. PROVIDE NON METALLIC, INSULATED FLEXIBLE DUCT.

FLEXIBLE DUCT DETAIL
NOT TO SCALE

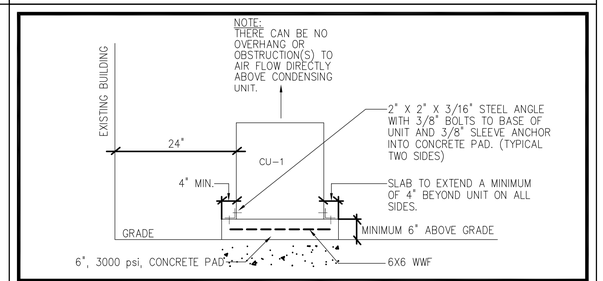

CONDENSING UNIT MOUNTING DETAIL
NOT TO SCALE

RECORD DRAWINGS

KAMM CONSULTING PROJECT #: 2002-0019
PROJECT MANAGER: DARIN FRICK

KAMM Consulting
947 Clint Moore Rd, Boca Raton, FL 33487
Phone 561.995.8636 Fax 561.995.1623
engineering@kamm.to
Certification of Authorization #1689

DIRECTOR OF ELECTRICAL ENGINEERING
Lon T. Carter Florida License #35249 — 01-31-08 date

DIRECTOR OF MECHANICAL ENGINEERING
Mircea Pella Florida License #48798 — signed

CARTAYA & ASSOCIATES ARCHITECTS P.A.
3077 E. COMMERCIAL BLVD. SUITE 201
FT. LAUDERDALE, FLORIDA 33308
771-2724 FAX 776-4280

NO.	DATE	ISSUED FOR	BY
1	01/08	RECORD DRAWINGS	M.P.

DESIGNED M.P
DRAWN D.F.
CHECKED M.P.
PROJ. ENGR. D.F.

MIRCEA PELLA P.E.
No. #48798

HAZEN AND SAWYER
Environmental Engineers & Scientists
4000 Hollywood Boulevard, Suite 750N
Hollywood, Florida 33021
(954) 987-0066

SCALE 1/8" = 1'-0"

CONTRACT: –
CLIENTS PROJECT:
ENGINEERS PROJECT: 40406
CAD REFERENCE: 40406A-01

H:\40406\001\HallandBch.jpg

CITY OF HALLANDALE BEACH
UTILITIES DEPARTMENT

6 MGD MEMBRANE SOFTENING W.T.P.

NF PROCESS BUILDING

VENTILATION DETAILS

DATE: JANUARY 2008
SHEET: 153 OF 162
DRAWING: V-7

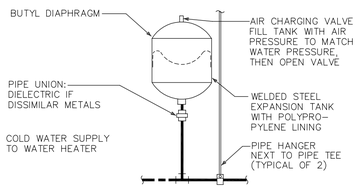

PIPING ARRANGEMENT SHOWN IS SCHEMATIC. ADJUST TO SUIT FIELD CONDITIONS. MAKE PIPE SAME SIZE AS TANK FITTING. FOLLOW MANUFACTURER'S INSTRUCTIONS FOR INSTALLATION PROCEDURE. VERIFY PROPER OPERATION WHEN INSTALLED.

EXPANSION TANK INSTALLATION SHALL OCCUR ONLY WHEN THERE IS A BACK FLOW PREVENTION DEVICE INSTALLED WITHIN THE TENANT SPACE WATER SYSTEM OR BUILDING WATER SYSTEM.

SMALL EXPANSION TANK DETAIL
NOT TO SCALE

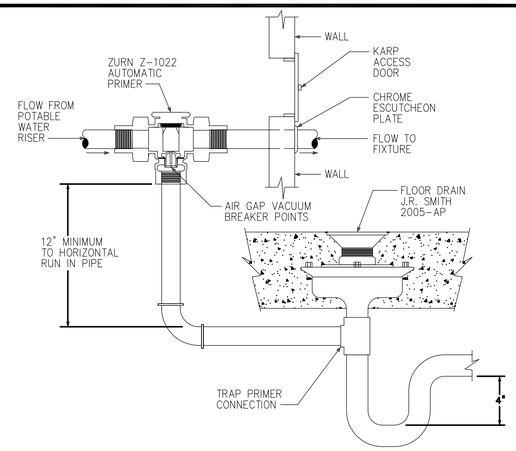

TRAP PRIMER DETAIL
NOT TO SCALE

PLUMBING LEGEND

CO	CLEAN OUT		SANITARY SEWER PIPING
S.O.V.	SHUT-OFF VALVE		VENT PIPING
COTC	CLEAN OUT TO GRADE		DOMESTIC COLD WATER PIPING
FD	FLOOR DRAIN		HOT WATER PIPING (110°)
CW	DOMESTIC COLD WATER		HOT WATER PIPING (140°)
HW	DOMESTIC HOT WATER		HOT WATER RECIRCULATING PIPING
HWR	DOMESTIC HOT WATER RECIRCULATING	CD	CONDENSATE PIPING
HB	HOSE BIBB	CA	COMPRESSED AIR PIPING
VTR	VENT THRU ROOF	T&P	TEMPERATURE AND PRESSURE RELIEF
	GATE VALVE	SD	STORM DRAIN PIPING
	GLOBE VALVE	G	GAS PIPING
	CHECK VALVE		PIPE RISE OR DROP
	GAS SOLENOID VALVE		PIPE RISER UP
	GAS COCK		CAPPED END OF PIPE
	WATER HAMMER ARRESTER		POINT OF CONNECTION
FD	FLOOR DRAIN		P-TRAP

PLUMBING SHEET INDEX

P-1	PLUMBING NOTES, SPECIFICATIONS, & LEGENDS
P-2	1ST FLOOR SANITARY PLAN
P-3	2ND FLOOR SANITARY PLAN
P-4	1ST FLOOR DOMESTIC WATER PLAN
P-5	2ND FLOOR DOMESTIC WATER PLAN
P-6	ROOF PLAN
P-7	SANITARY ISOMETRIC DIAGRAM
P-8	DOMESTIC WATER ISOMETRIC DIAGRAM
P-9	STORM & CONDENSATE ISOMETRIC DIAGRAM

PLUMBING FIXTURE SCHEDULE

LAV	LAVATORY, AMERICAN STANDARD DECLYN WALL HUNG MODEL #0321.075 WHITE WITH 2000.101 FAUCET. CONTRACTOR TO SUPPLY CONCEALED ARM SUPPORT CARRIER FOR MOUNTING OF LAVATORY.
HLAV	HANDICAP LAVATORY, AMERICAN STANDARD, DECLYN WALL HUNG LAVATORY MODEL #0321.075. WHITE, WITH FAUCET AMERICAN STANDARD MODEL #2000.101. CONTRACTOR TO SUPPLY CONCEALED ARM SUPPORT CARRIER FOR MOUNTING OF LAVATORY. SUPPLY TRUBRO MODEL #102G HANDI LAV-GUARD INSULATION KIT. MUST MEET A.D.A. CODE.
WC	WATER CLOSET – FLUSH VALVE, BOWL; FLOOR MOUTED, SIPHON JET ACTION VITREOUS CHINA, ELONGATED RIM AND 1-1/2" TOP SPUD, AMERICAN STANDARD 2234.015 MADERA AQUAMETER, 1.5 GPF TOILET WITH A SLOAN ROYAL #111 FLUSH VALVE AND A CHURCH #9500C OPEN FRONT SEAT LESS COVER.
HWC	HANDICAPPED WATER CLOSET – FLUSH VALVE, BOWL; FLOOR MOUNTED, SIPHON JET, VITREOUS CHINA WITH ELONGATED RIM AND A 1-1/2" TOP SPUD AND 18" HIGH AMERICAN STANDARD 3043.102 ELDERLY NEW CADET AQUAMETER, 1.5 GPF TOILET WITH A SLOAN ROYAL #111 FLUSH VALVE AND A CHURCH #9500C OPEN FRONT SEAT LESS COVER.
HUR	URINAL AMERICAN STANDARD, ALLBROOK 6541.132. FLUSH VALVE SLOAN ROYAL 186-1, WALL MOUNTED, WHITE URINAL WALL CARRIER ZURN. MUST MEET A.D.A. CODE.
SH	SHOWER, MIXING VALVE HOT AND COLD WATER, SHOWER MIXING VALVE SHALL BE A SYMMONS TEMPTROL 2000 MODEL #25-I-X ANTI-SCALD BALANCED PRESSURE SHOWER VALVE TO INCLUDE A 2.5 GPM FLOW RESTRICTOR AND INTERGRAL SERVICE STOPS.
FD	FLOOR DRAIN, ZURN MODEL Z-415 W/ TYBE "B" STRAINER, 3" W/ 4" DEEP SEAL TRAP.
SK	SINGLE STAINLESS STEEL SINK, 25X22 DAYTON MODEL #K-12522 WITH CHICAGO FAUCETS MODEL #786E3-CP KITCHEN 5-3/4" SPREAD GOOSENECK WITH 4" WRIST BLADE FAUCET HANDLES.
HDF/DF	HANDICAP/DRINKING FOUNTAIN, SUNROC BI-LEVEL MODEL NWCA-8F-BL, WALL MOUNTED BARRIER FREE, 7.5 GPH. SUPPLY ANY ADDITIONAL WALL CARRIERS REQUIED FOR COMPLETE INSTALLATION. MUST MEET A.D.A. CODE. 1/5 HP 5.1 FLA 455 W 115 V.
RD	ROOF DRAIN: ZURN Z-100-RC. USE EXTENSION IF NEEDED.
GD	FOOD WASTE DISPOSAL "ISE", "GRAINGER" STOCK #5H504, 1/2 HP, 115V.
EWH	WATER HEATER SHALL BE 80 GAL. ELECTRIC 480V. 3ø 5 KW O.A. SMITH DEN-80

GENERAL NOTES:

(1) – FIXTURE SHALL BE AS SHOWN OR EQUAL.
(2) – ALL FIXTURES SHALL COMPLY WITH TABLE 604.4 OF FBC 2001.

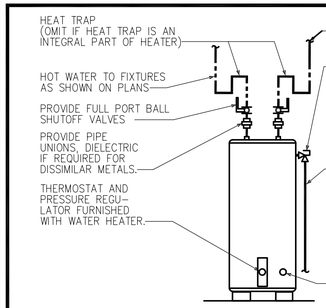

PIPING ARRANGEMENT SHOWN IS SCHEMATIC. ADJUST TO SUIT
FIELD CONDITIONS. REFER TO ISOMETRIC RISER FOR PIPE SIZES.
SET HEATER THERMOSTAT AT 120° F.

WATER HEATER TO BE 80 GALLON, ELECTRIC, 480 V. 3PH, 5KW O.A. SMITH DEN-80

WATER HEATER SCHEDULE/DETAIL
NOT TO SCALE

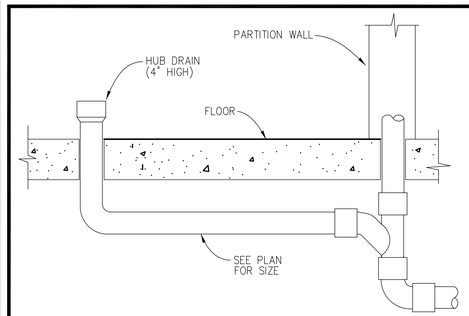

CONDENSATE HUB DRAIN DETAIL
NOT TO SCALE

NOTES:
1. ALLOW SUFFICIENT SPACE BELOW DRAIN PAN FOR TRAP
2. PITCH DRAIN FOR PROPER RUNOFF.
3. MANUALLY PRIME FILL TRAP BEFORE START-UP TO FORM INITIAL DRAIN SEAL.
4. SUPPORT LENGTHY DRAIN LINES TO PREVENT SAG AND CONDENSATE OVERFLOW.

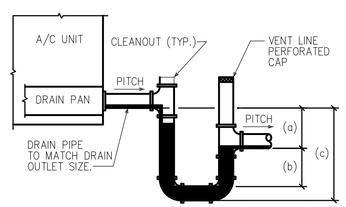

THIS STANDARD DETAIL MUST BE REVIEWED AND SITE ADAPTED BY CONTRACTOR PRIOR TO USE FOR FINAL EQUIPMENT.

(a) THIS DIMENSION IN INCHES MUST BE EQUAL TO THE MAXIMUM FAN SUCTION (NEGATIVE) STATIC PRESSURE IN INCHES WG (WITH DIRTY FILTERS, COILS, AND MAXIMUM AIR FLOW) + 1" W.G.
(b) THIS DIMENSION IN INCHES MUST BE EQUAL TO MIN. 1/2 OF THE (a) ABOVE
(c) EQUALS (a) + (b) + PIPE DIA. + + INSULATION

DRAW THRU UNIT CONDENSATE TRAP
NOT TO SCALE

PLUMBING NOTES

1. ALL WORKMANSHIP AND MATERIALS SHALL BE IN STRICT ACCORDANCE WITH APPLICABLE LOCAL CODES, RULES AND ORDINANCES.
2. PLUMBING CONTRACTOR SHALL VISIT THE JOB SITE AND THOROUGHLY FAMILIARIZE HIMSELF WITH ALL EXISTING CONDITIONS.
3. ALL MATERIALS SHALL BE NEW.
4. ALL WORK SHALL BE PERFORMED BY A LICENSED PLUMBING CONTRACTOR IN A FIRST CLASS WORKMANLIKE MANNER. THE COMPLETED SYSTEM SHALL BE FULLY OPERATIVE. ALL EXCAVATION AND BACKFILL AS REQUIRED FOR THIS PHASE OF CONSTRUCTION SHALL BE A PART OF THIS CONTRACT.
5. REQUIRED INSURANCE SHALL BE PROVIDED BY THE PLUMBING CONTRACTOR FOR PROTECTION AGAINST PUBLIC LIABILITY AND PROPERTY DAMAGE FOR THE DURATION OF THE WORK.
6. PLUMBING CONTRACTOR SHALL SECURE AND PAY FOR ALL PERMITS, FEES, INSPECTION AND TESTS, PLUMBING CONTRACTOR TO OBTAIN PERMIT AND APPROVED SUBMITTALS PRIOR TO BEGINNING WORK OR ORDERING EQUIPMENT. PLUMBING CONTRACTOR MUST BE PRESENT FOR ALL INSPECTIONS OF HIS WORK BY REGULATORY AUTHORITIES.
7. DRAWINGS ARE DIAGRAMMATIC. DO NOT SCALE FOR THE EXACT LOCATION OF FIXTURES, PIPING, EQUIPMENT, ETC.
8. ALL WORK SHALL BE COORDINATED WITH OTHER TRADES TO AVOID INTERFERENCE WITH THE PROGRESS OF CONSTRUCTION. REPORT ANY DISCREPANCY TO ENGINEER/ARCHITECT PRIOR TO BEGINNING CONSTRUCTION.
9. VERIFY LOCATION, SIZE, DIRECTION OF FLOW AND INVERTS OF ALL EXISTING UTILITIES PRIOR TO BEGINNING OF CONSTRUCTION. ADVISE ENGINEER OF ANY DISCREPANCIES.
10. WATER DISTRIBUTION PIPING ABOVE AND BELOW GROUND SHALL BE TYPE "L" COPPER. COORDINATE WITH LOCAL JURISDICTION FOR ADDITIONAL REQUIREMENTS. PROVIDE ALTERNATE FOR CPVC PIPING EQUAL TO BFGOODRICH "FLOWGUARD GOLD" FOR WATER KNOWN OR DETERMINED TO HAVE ACIDIC CHARACTERISTICS. CONTRACTOR SHALL PERFORM A WATER TEST TO DETERMINE WATER CHEMISTRY PRIOR TO ANY WORK OR PIPING INSTALLATION AND SHALL SUBMIT TEST RESULTS TO ENGINEER FOR REVIEW AND APPROVAL.
11. SOIL, WASTE, VENT AND RAINWATER PIPING SHALL BE CAST IRON OR PVC, WHERE CODE ALLOWS. PVC MAY NOT BE USED THRU RATED ASSEMBLIES OR IN PLENUMS.
12. ALL FIXTURES MUST BE PROVIDED WITH READILY ACCESSIBLE STOPS AND APPROPRIATELY MARKED ACCESS PANELS. COORDINATE LOCATIONS WITH GENERAL CONTRACTOR PRIOR TO INSTALLATION.
13. FURNISH AND INSTALL APPROVED WATER HAMMER ARRESTORS FOR ALL (GROUP) PLUMBING FIXTURES, SIZED AND LOCATED PER MANUF.'S INSTALLATION INSTRUCTIONS AND WH-PDI 201.
14. DIELECTRIC COUPLINGS ARE REQUIRED BETWEEN ALL DISSIMILAR METAL IN PIPING AND EQUIPMENT CONNECTIONS.
15. ISOLATE COPPER PIPE FROM HANGER OR SUPPORTS WITH ISOLATOR PADS OR MATERIAL.
16. ALL FIRE RATED FLOOR AND WALL PENETRATIONS SHALL BE PROPERLY PROTECTED FROM FIRE, SMOKE AND WATER PENETRATION BY FILLING VOIDS BETWEEN PIPE AND WALL/FLOOR SLEEVES WITH FIRE RATED FOAM. TO ACHIEVE THE SAME RATING AS WALLS OR FLOORS AS PART OF THE PLUMBER'S WORK.
17. PLUMBING CONTRACTOR SHALL GUARANTEE ALL MATERIALS AND WORKMANSHIP FREE FROM DEFECTS FOR A PERIOD OF NOT LESS THAN ONE (1) YEAR FROM DATE OF ACCEPTANCE BY OWNER. CORRECTION OF ANY DEFECTS SHALL BE COMPLETED WITHOUT ADDITIONAL CHARGE AND SHALL INCLUDE REPLACEMENT OR REPAIR OF ANY OTHER PHASE OF THE INSTALLATION WHICH MAY HAVE BEEN DAMAGED.
18. PROVIDE ACCESS PANELS FOR ALL CONCEALED VALVES AND ALL WATER HAMMER ARRESTORS. ACCESS PANELS IN RATED WALLS MUST MAINTAIN THE SAME RATING AND MUST MATCH THE FINISH OF THE WALL IN WHICH IT IS INSTALLED.
19. PROVIDE CHROME PLATED COMBINATION COVER PLATE AND CLEANOUT PLUG OR ACCESS PANEL FOR ALL WALL CLEANOUTS.
20. NO COMBUSTIBLE MATERIAL TO BE USED IN MECHANICAL ROOMS OR IN CEILING SPACES WHERE USED AS RETURN AIR PLENUMS.
21. NO WATER, SANITARY OR DRAINAGE PIPING PERMITTED IN ELECTRICAL OR ELEVATOR EQUIPMENT ROOMS.
22. ALL CONTROL VALVES SHALL BE TAGGED AND MARKED. A REPRODUCIBLE DIAGRAM LOCATING ALL VALVES SHALL BE PROVIDED FOR OWNER/OPERATOR.
23. ALL CONDENSATE DRAIN PIPING SHALL BE TYPE "L" COPPER WITH 1" THICK ARMAFLEX INSULATION WHERE USED IN A RETURN AIR PLENUM. PVC PIPING WITH 1" THICK ARMAFLEX INSULATION MAY BE USED IN LOCATIONS WHERE ALLOWED BY LOCAL CODES. SEE PLUMBING DRAWINGS FOR SIZE AND LOCATION OF PIPING.
24. PROVIDE ANGLE STOPS ON ALL WATER SERVICE LINES TO FIXTURES FOR INDIVIDUAL SHUT-OFF.
25. WATER PIPING INSULATION SHALL BE 1" THICK ARMAFLEX INSTALLED IN ACCORDANCE WITH MANUFACTURERS INSTRUCTIONS FOR ALL HOT WATER PIPING. WHERE DOMESTIC WATER TEMPERATURES CAN CAUSE SWEATING ALL COLD WATER PIPING SHALL BE INSULATED WITH ARMAFLEX INSULATION, THICKNESS AS PER TABLE 4-11 OF FLORIDA ENERGY CODE.
26. STUDOR MINI/MAXI AIR ADMITTANCE VALVES MAY BE USED AS AN ALTERNATE TO VENT PIPING THRU ROOF WHERE ACCEPTABLE BY THE PLUMBING OFFICIAL AND LOCAL CODES. INSTALLATION SHALL BE AS PER MANUFACTURER'S RECOMMENDATIONS.

RECORD DRAWINGS

KAMM CONSULTING PROJECT #: 2002-0019
PROJECT MANAGER: Darin Frick

KAMM Consulting
947 Clint Moore Rd. Boca Raton, FL 33487
Phone 561.995.8636 Fax 561.995.1623
engineering@kamm.to
Certification of Authorization #1689

DIRECTOR OF ELECTRICAL ENGINEERING
Lon T. Carter Florida License #35249 — 01-31-08 date

DIRECTOR OF MECHANICAL ENGINEERING
Mircea Pella Florida License #48798 — signed

CARTAYA & ASSOCIATES ARCHITECTS P.A.
3077 E. COMMERCIAL BLVD. SUITE 201
FT. LAUDERDALE, FLORIDA 33308
771-2724 FAX 776-4280

NO.	DATE	ISSUED FOR	BY
1	01/08	RECORD DRAWINGS	M.P.

DESIGNED M.P
DRAWN D.F.
CHECKED M.P.
PROJ. ENGR. D.F.

MIRCEA PELLA P.E.
No. #48798

HAZEN AND SAWYER
Environmental Engineers & Scientists
4000 Hollywood Boulevard, Suite 750N
Hollywood, Florida 33021
(954) 987-0066

SCALE 1/8" = 1'-0"

CONTRACT: –
CLIENTS PROJECT:
ENGINEERS PROJECT: 40406
CAD REFERENCE: 40406A-01

H:\40406\001\HallandBch.jpg

CITY OF HALLANDALE BEACH
UTILITIES DEPARTMENT

6 MGD MEMBRANE SOFTENING W.T.P.

NF PROCESS BUILDING
PLUMBING NOTES,LEGEND
& SPECIFCATIONS

DATE: JANUARY 2008
SHEET: 154 OF 162
DRAWING: P-1

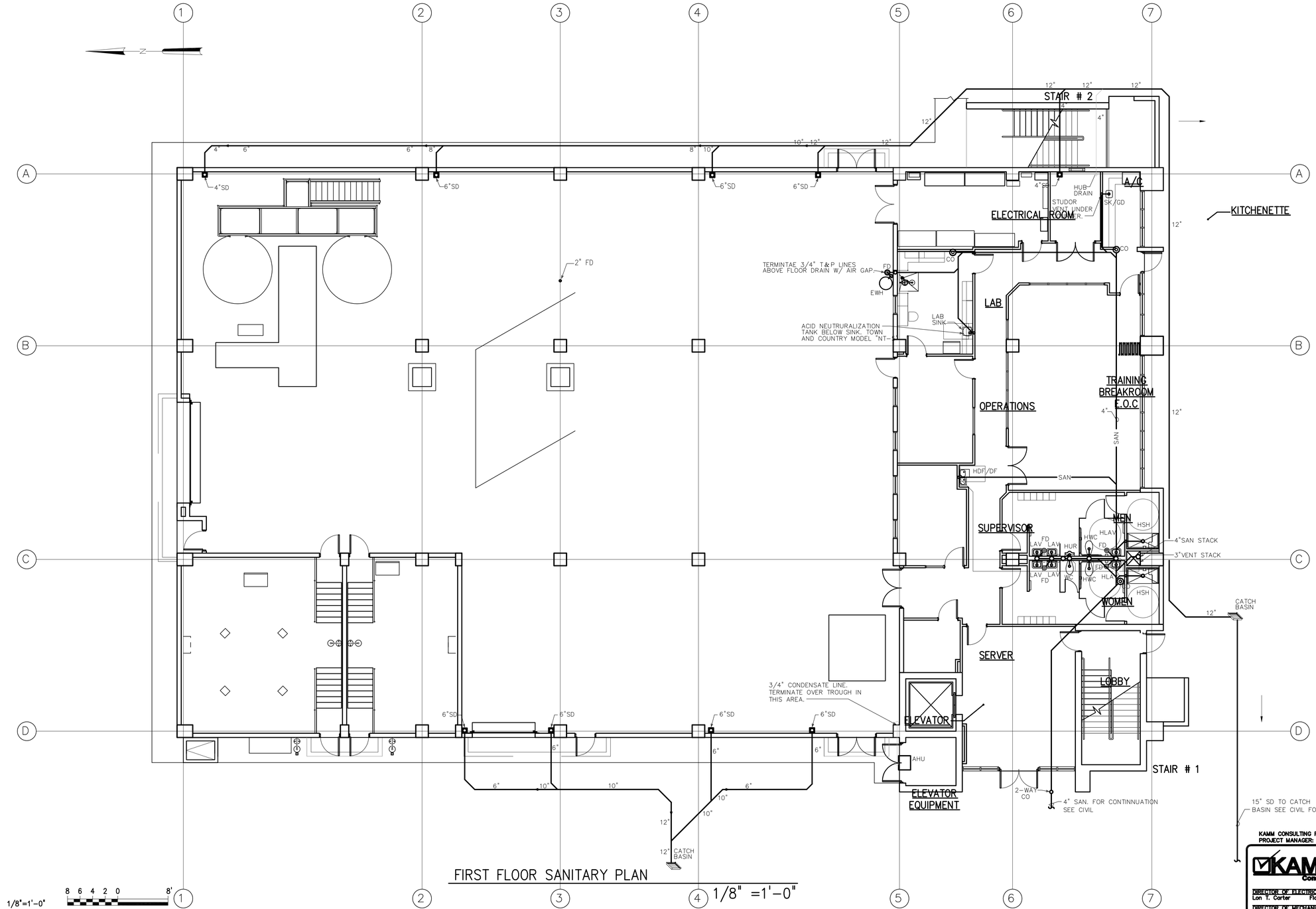

FIRST FLOOR SANITARY PLAN

1/8" =1'-0"

RECORD DRAWINGS

CARTAYA & ASSOCIATES ARCHITECTS P.A.
3077 E. COMMERCIAL BLVD. SUITE 201
FT. LAUDERDALE, FLORIDA 33308
771-2724 FAX 776-4280

KAMM CONSULTING PROJECT #: 2002-0019
PROJECT MANAGER: Darin Frick

KAMM Consulting
947 Clint Moore Rd. Boca Raton, FL 33487
Phone 561.995.8636 Fax 561.995.1623
engineering@kamm.to
Certification of Authorization #1689

DIRECTOR OF ELECTRICAL ENGINEERING
Lon T. Carter Florida License #35249 — 01-31-08 date

DIRECTOR OF MECHANICAL ENGINEERING
Mircea Pella Florida License #48798 — signed

NO.	DATE	ISSUED FOR	BY
1	01/08	RECORD DRAWINGS	M.P.

DESIGNED M.P
DRAWN D.F.
CHECKED M.P.
PROJ. ENGR. D.F.

MIRCEA PELLA P.E.
No. #48798

HAZEN AND SAWYER
Environmental Engineers & Scientists
4000 Hollywood Boulevard, Suite 750N
Hollywood, Florida 33021
(954) 987-0066

SCALE 1/8" = 1'-0"

CONTRACT: –
CLIENTS PROJECT:
ENGINEERS PROJECT: 40406
CAD REFERENCE: 40406A-01

H:\40406\001\HallandBch.jpg

CITY OF HALLANDALE BEACH
UTILITIES DEPARTMENT

6 MGD MEMBRANE SOFTENING W.T.P.

NF PROCESS BUILDING

FIRST FLOOR SANITARY PLAN

DATE: JANUARY 2008
SHEET: 155 OF 162
DRAWING: P-2

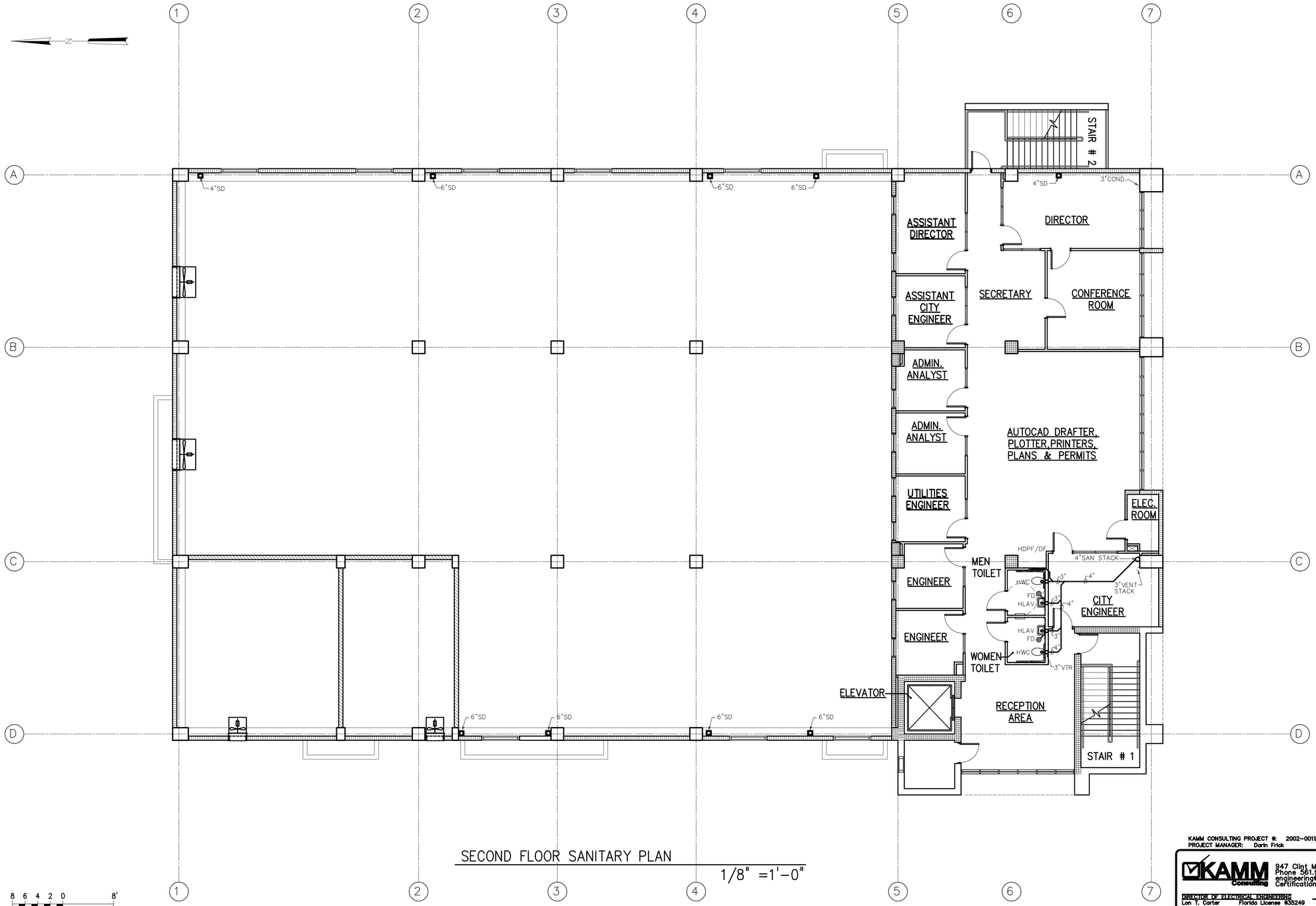

SECOND FLOOR SANITARY PLAN

1/8" =1'-0"

1/8"=1'-0"

8 6 4 2 0 8'

RECORD DRAWINGS

KAMM CONSULTING PROJECT #: 2002-0019
PROJECT MANAGER: Darin Frick

KAMM Consulting
947 Clint Moore Rd. Boca Raton, FL 33487
Phone 561.995.8636 Fax 561.995.1623
engineering@kamm.to
Certification of Authorization #1689

DIRECTOR OF ELECTRICAL ENGINEERING
Lon T. Carter Florida License #35249 — 01-31-08 date

DIRECTOR OF MECHANICAL ENGINEERING
Mircea Pella Florida License #48798 — signed

CARTAYA & ASSOCIATES ARCHITECTS P.A.
3077 E. COMMERCIAL BLVD. SUITE 201
FT. LAUDERDALE, FLORIDA 33308
771-2724 FAX 776-4280

NO.	DATE	ISSUED FOR	BY
1	01/08	RECORD DRAWINGS	M.P.

DESIGNED M.P
DRAWN D.F.
CHECKED M.P.
PROJ. ENGR. D.F.

MIRCEA PELLA P.E.
No. #48798

HAZEN AND SAWYER
Environmental Engineers & Scientists
4000 Hollywood Boulevard, Suite 750N
Hollywood, Florida 33021
(954) 987-0066

SCALE 1/8" = 1'-0"

CONTRACT: –
CLIENTS PROJECT:
ENGINEERS PROJECT: 40406
CAD REFERENCE: 40406A-01

H:\40406\001\HallandBch.jpg

CITY OF HALLANDALE BEACH
UTILITIES DEPARTMENT

6 MGD MEMBRANE SOFTENING W.T.P.

NF PROCESS BUILDING

SECOND FLOOR SANITARY PLAN

DATE: JANUARY 2008
SHEET: 156 OF 162
DRAWING: P-3

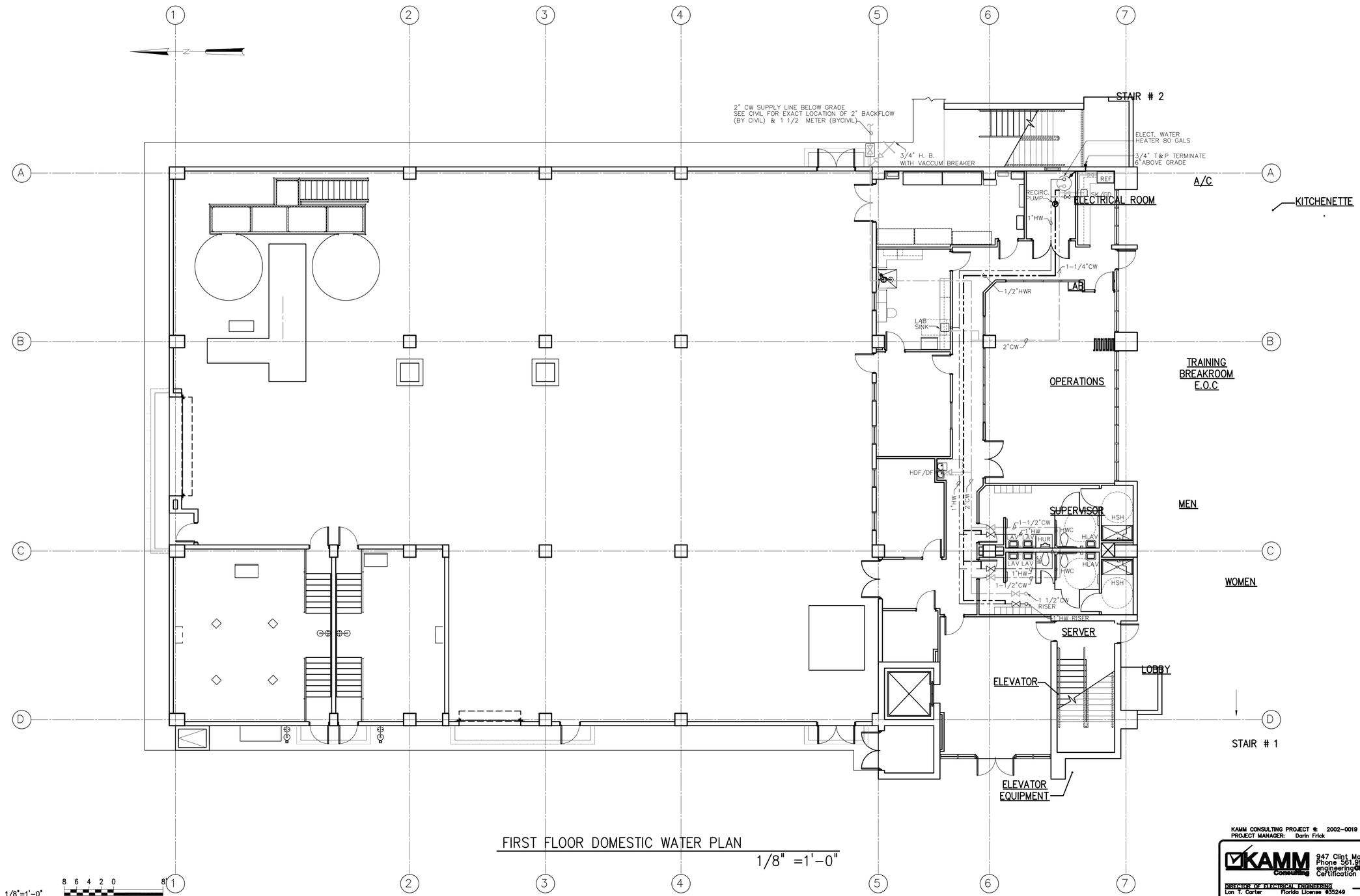

FIRST FLOOR DOMESTIC WATER PLAN

1/8" =1'-0"

RECORD DRAWINGS

KAMM CONSULTING PROJECT #: 2002-0019
PROJECT MANAGER: Darin Frick

KAMM Consulting
947 Clint Moore Rd. Boca Raton, FL 33487
Phone 561.995.8638 Fax 561.995.1623
engineering@kamm.to
Certification of Authorization #1689

DIRECTOR OF ELECTRICAL ENGINEERING
Lon T. Carter Florida License #35249 — 01-31-08 date

DIRECTOR OF MECHANICAL ENGINEERING
Mircea Pella Florida License #48798 — signed

CARTAYA & ASSOCIATES
ARCHITECTS P.A.
3077 E. COMMERCIAL BLVD. SUITE 201
FT. LAUDERDALE, FLORIDA 33308
771-2724 FAX 776-4280

NO.	DATE	ISSUED FOR	BY
1	01/08	RECORD DRAWINGS	M.P.

DESIGNED M.P
DRAWN D.F.
CHECKED M.P.
PROJ. ENGR. D.F.

MIRCEA PELLA P.E.
No. #48798

HAZEN AND SAWYER
Environmental Engineers & Scientists
4000 Hollywood Boulevard, Suite 750N
Hollywood, Florida 33021
(954) 987-0066

SCALE 1/8" = 1'-0"

CONTRACT: –
CLIENTS PROJECT:
ENGINEERS PROJECT: 40406
CAD REFERENCE: 40406A-01

CITY OF HALLANDALE BEACH
UTILITIES DEPARTMENT

6 MGD MEMBRANE SOFTENING W.T.P.

NF PROCESS BUILDING

FIRST FLOOR DOMESTIC WATER PLAN

DATE: JANUARY 2008
SHEET: 157 OF 162
DRAWING: P-4

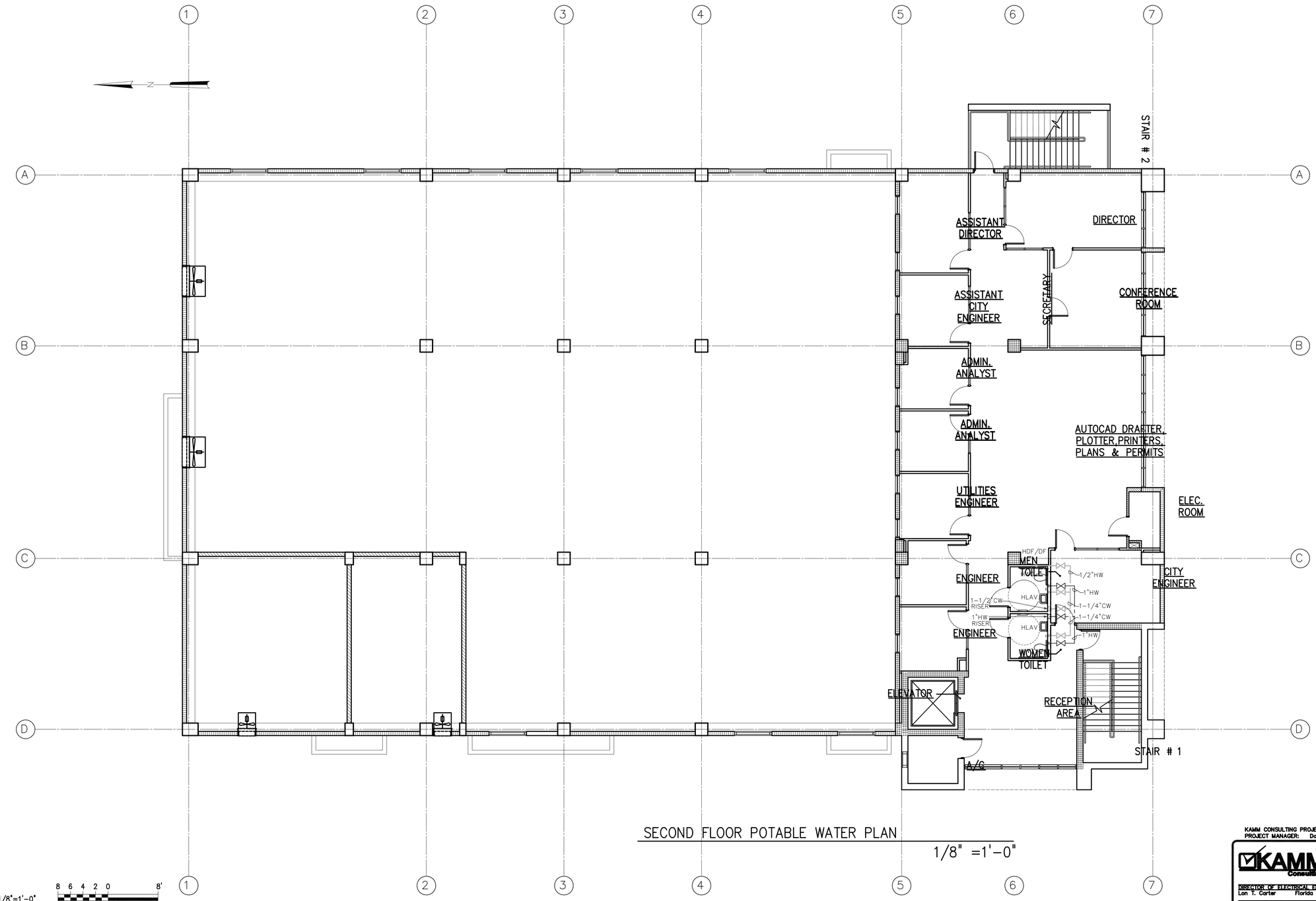

SECOND FLOOR POTABLE WATER PLAN

1/8" =1'-0"

1/8"=1'-0"

8 6 4 2 0 8'

RECORD DRAWINGS

CARTAYA & ASSOCIATES ARCHITECTS P.A.

3077 E. COMMERCIAL BLVD. SUITE 201
FT. LAUDERDALE, FLORIDA 33308
771-2724 FAX 776-4280

KAMM CONSULTING PROJECT #: 2002-0019
PROJECT MANAGER: Darin Frick

KAMM Consulting
947 Clint Moore Rd. Boca Raton, FL 33487
Phone 561.995.8636 Fax 561.995.1623
engineering@kamm.to
Certification of Authorization #1689

DIRECTOR OF ELECTRICAL ENGINEERING
Lon T. Carter Florida License #35249 — 01-31-08 date

DIRECTOR OF MECHANICAL ENGINEERING
Mircea Pella Florida License #48798 — signed

NO.	DATE	ISSUED FOR	BY
1	01/08	RECORD DRAWINGS	M.P.

DESIGNED M.P
DRAWN D.F.
CHECKED M.P.
PROJ. ENGR. D.F.

MIRCEA PELLA P.E.
No. #48798

HAZEN AND SAWYER
Environmental Engineers & Scientists
4000 Hollywood Boulevard, Suite 750N
Hollywood, Florida 33021
(954) 987-0066

SCALE 1/8" = 1'-0"

CONTRACT: –
CLIENTS PROJECT:
ENGINEERS PROJECT: 40406
CAD REFERENCE: 40406A-01

H:\40406\001\HallanBch.jpg

CITY OF HALLANDALE BEACH
UTILITIES DEPARTMENT

6 MGD MEMBRANE SOFTENING W.T.P.

NF PROCESS BUILDING
SECOND FLOOR
DOMESTIC WATER PLAN

DATE: JANUARY 2008
SHEET: 158 OF 162
DRAWING: P-5

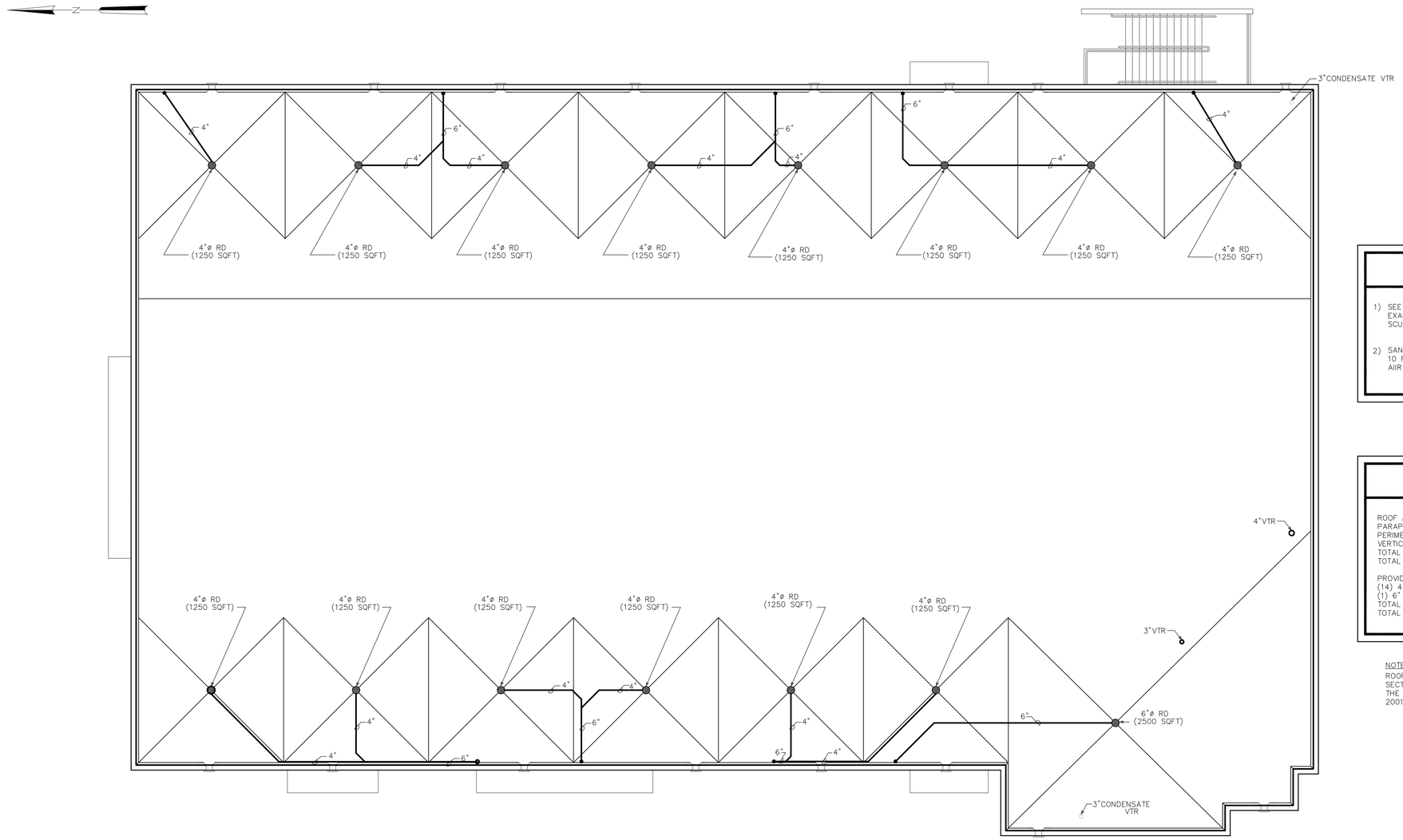

ROOF PLAN

1/8"=1'-0"

1/8"=1'-0" 8 6 4 2 0 8'

NOTES

1) SEE ARCHITECTURAL DRAWINGS FOR EXACT LOCATION OF ROOF DRAINS, SCUPPERS & SCUPPER SIZES.

2) SANITARY VENTS TO BE A (MIN) OF 10 FEET FROM A/C UNITS OUTSIDE AIR INTAKE.

ROOF DRAINAGE CALCULATIONS

ROOF AREA	=	14,206 SQ. FT.
PARAPET WALL HEIGHT	=	5 FT. HIGH
PERIMETER	=	508 FT.
VERTICAL WALL AREA	=	508 x 2.5 = 1,270 SQ. FT.
TOTAL AREA	=	14,206 + 1,270
TOTAL AREA TO BE DRAINED	=	15,476 SQ. FT.
PROVIDED		
(14) 4" ROOF DRAINS	=	1,250 SQ. FT. EACH
(1) 6" ROOF DRAIN	=	2,500 SQ. FT.
TOTAL	=	1,250 x 14 + 2,500
TOTAL DRAINAGE PROVIDED	=	20,000 SQ. FT.

NOTE:
ROOF DRAINS SHALL COMPLY WITH SECTIONS 1105.1, 1105.2, 1105.3 OF THE FLORIDA BUILDING CODE – PLUMBING 2001 EDITION.

RECORD DRAWINGS

KAMM CONSULTING PROJECT #: 2002-0019
PROJECT MANAGER: Darin Frick

KAMM Consulting
947 Clint Moore Rd. Boca Raton, FL 33487
Phone 561.995.8636 Fax 561.995.1623
engineering@kamm.to
Certification of Authorization #1689

DIRECTOR OF ELECTRICAL ENGINEERING
Lon T. Carter Florida License #35249 — 01-31-08 date

DIRECTOR OF MECHANICAL ENGINEERING
Mircea Pella Florida License #48798 — signed

CARTAYA & ASSOCIATES ARCHITECTS P.A.
3077 E. COMMERCIAL BLVD. SUITE 201
FT. LAUDERDALE, FLORIDA 33308
771-2724 FAX 776-4280

NO.	DATE	ISSUED FOR	BY
1	01/08	RECORD DRAWINGS	M.P.

DESIGNED M.P
DRAWN D.F.
CHECKED M.P.
PROJ. ENGR. D.F.

MIRCEA PELLA P.E.
No. #48798

HAZEN AND SAWYER
Environmental Engineers & Scientists
4000 Hollywood Boulevard, Suite 750N
Hollywood, Florida 33021
(954) 987-0066

SCALE 1/8" = 1'-0"

CONTRACT: –
CLIENTS PROJECT:
ENGINEERS PROJECT: 40406
CAD REFERENCE: 40406A-01

H:\40406\001\HallandBch.jpg

CITY OF HALLANDALE BEACH
UTILITIES DEPARTMENT

6 MGD MEMBRANE SOFTENING W.T.P.

NF PROCESS BUILDING

ROOF PLAN

DATE: JANUARY 2008
SHEET: 159 OF 162
DRAWING: P-6

NOTES

1. SANITARY LINES LARGER THAN 2" TO HAVE A FALL OF 1/8"/FT
2. SANITARY LINES 2" & LESS TO TO HAVE A FALL OF 1/4"/FT

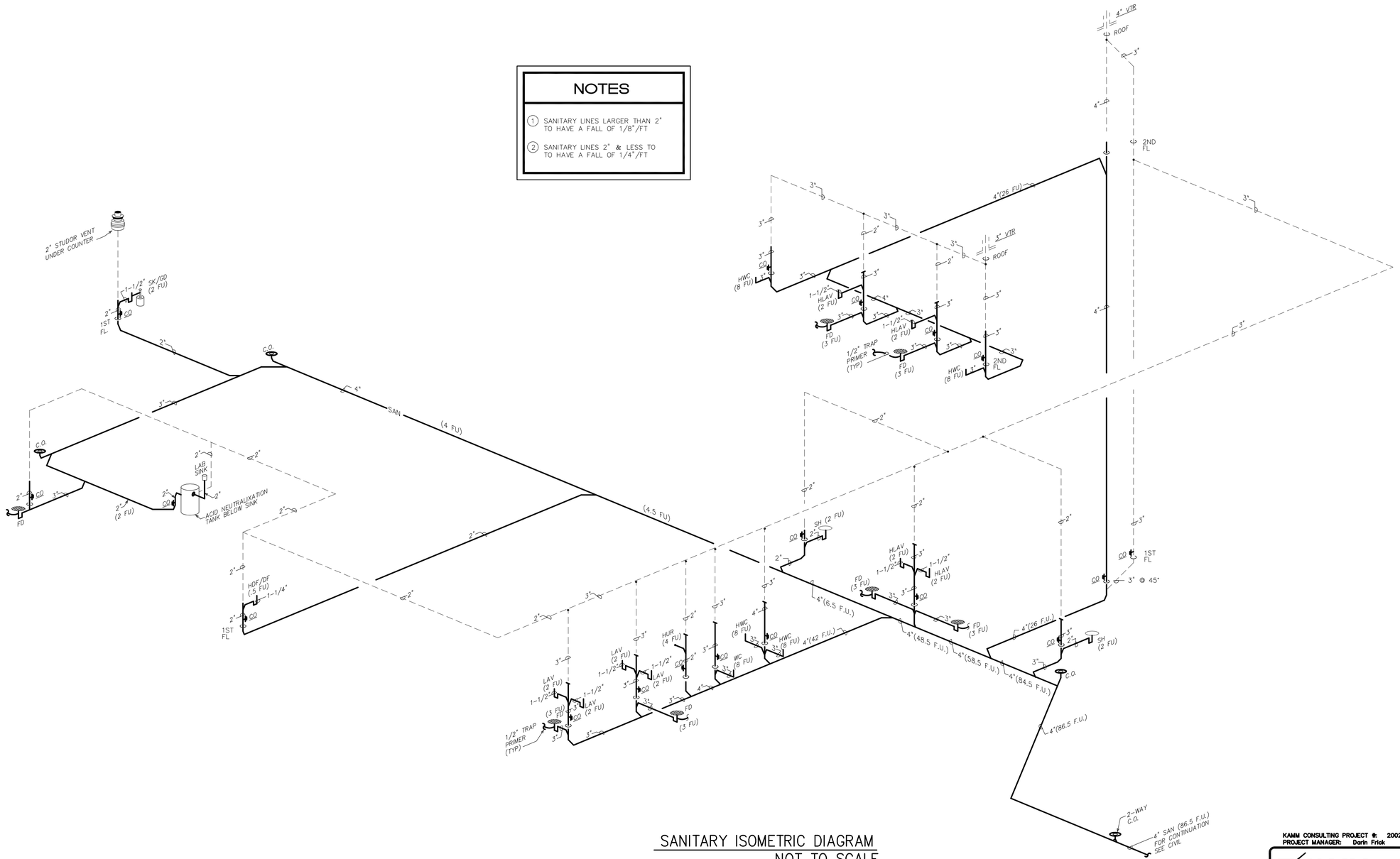

SANITARY ISOMETRIC DIAGRAM
NOT TO SCALE

RECORD DRAWINGS

KAMM CONSULTING PROJECT #: 2002-0019
PROJECT MANAGER: Darin Frick

KAMM Consulting
947 Clint Moore Rd. Boca Raton, FL 33487
Phone 561.995.8638 Fax 561.995.1623
engineering@kamm.to
Certification of Authorization #1689

DIRECTOR OF ELECTRICAL ENGINEERING
Lon T. Carter Florida License #35249 — 01-31-08 date

DIRECTOR OF MECHANICAL ENGINEERING
Mircea Pella Florida License #48798 — signed

CARTAYA & ASSOCIATES ARCHITECTS P.A.
3077 E. COMMERCIAL BLVD. SUITE 201
FT. LAUDERDALE, FLORIDA 33308
771-2724 FAX 776-4280

NO.	DATE	ISSUED FOR	BY
1	01/08	RECORD DRAWINGS	M.P.

DESIGNED M.P
DRAWN D.F.
CHECKED M.P.
PROJ. ENGR. D.F.

MIRCEA PELLA P.E.
No. #48798

HAZEN AND SAWYER
Environmental Engineers & Scientists
4000 Hollywood Boulevard, Suite 750N
Hollywood, Florida 33021
(954) 987-0066

SCALE 1/8" = 1'-0"

CONTRACT: –
CLIENTS PROJECT:
ENGINEERS PROJECT: 40406
CAD REFERENCE: 40406A-01

H:\40406\001\HallandBch.jpg

CITY OF HALLANDALE BEACH
UTILITIES DEPARTMENT

6 MGD MEMBRANE SOFTENING W.T.P.

NF PROCESS BUILDING

SANITARY ISOMETRIC DIAGRAM

DATE: JANUARY 2008
SHEET: 160 OF 162
DRAWING: P-7

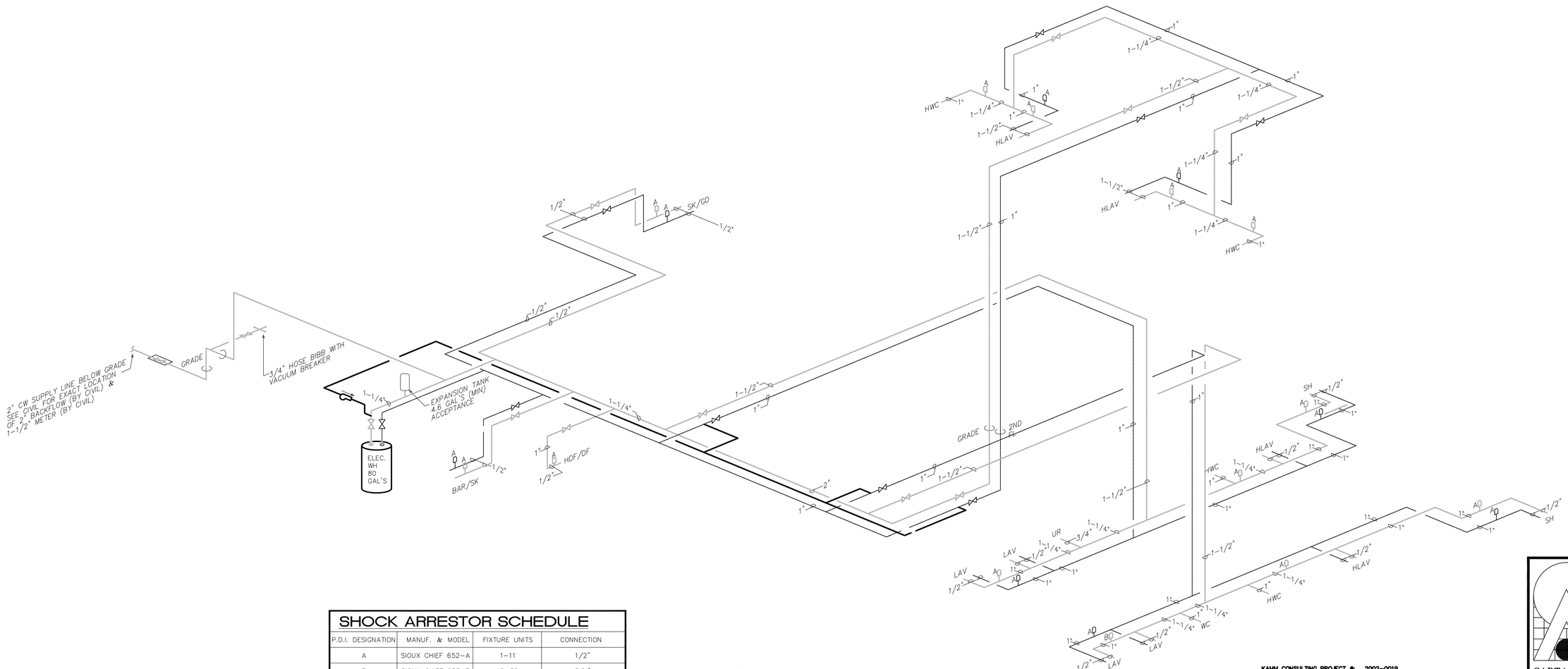

SHOCK ARRESTOR SCHEDULE

P.D.I. DESIGNATION	MANUF. & MODEL	FIXTURE UNITS	CONNECTION
A	SIOUX CHIEF 652-A	1-11	1/2"
B	SIOUX CHIEF 653-B	12-32	3/4"
C	SIOUX CHIEF 654-C	33-60	1"

SIOUX CHIEF SHOCK ARRESTORS APPROVED FOR INSTALLATION WITH NO ACCESS DOOR REQUIRED. CONFORMS TO ANSI/ASSE 1010 STANDARDS.

DOMESTIC WATER ISOMETRIC DIAGRAM
NOT TO SCALE

RECORD DRAWINGS

KAMM CONSULTING PROJECT #: 2002-0019
PROJECT MANAGER: Darin Frick

KAMM Consulting
947 Clint Moore Rd. Boca Raton, FL 33487
Phone 561.995.8638 Fax 561.995.1623
engineering@kamm.to
Certification of Authorization #1689

DIRECTOR OF ELECTRICAL ENGINEERING
Lon T. Carter Florida License #35249 — 01-31-08 date

DIRECTOR OF MECHANICAL ENGINEERING
Mircea Pella Florida License #48798 — signed

CARTAYA & ASSOCIATES ARCHITECTS P.A.
3077 E. COMMERCIAL BLVD. SUITE 201
FT. LAUDERDALE, FLORIDA 33308
771-2724 FAX 776-4280

NO.	DATE	ISSUED FOR	BY
1	01/08	RECORD DRAWINGS	M.P.

DESIGNED M.P
DRAWN D.F.
CHECKED M.P.
PROJ. ENGR. D.F.

MIRCEA PELLA P.E.
No. #48798

HAZEN AND SAWYER
Environmental Engineers & Scientists
4000 Hollywood Boulevard, Suite 750N
Hollywood, Florida 33021
(954) 987-0066

SCALE 1/8" = 1'-0"

CONTRACT: –
CLIENTS PROJECT:
ENGINEERS PROJECT: 40406
CAD REFERENCE: 40406A-01

H:\40406\001\HallandBch.jpg

CITY OF HALLANDALE BEACH
UTILITIES DEPARTMENT

6 MGD MEMBRANE SOFTENING W.T.P.

NF PROCESS BUILDING
DOMESTIC WATER
ISOMETRIC DIAGRAM

DATE: JANUARY 2008
SHEET: 161 OF 162
DRAWING: P-8

ROOF DRAINAGE CALCULATIONS

ROOF AREA	=	14,206 SQ. FT.
PARAPET WALL HEIGHT	=	5 FT. HIGH
PERIMETER	=	508 FT.
VERTICAL WALL AREA	=	508 x 2.5 = 1,270 SQ. FT.
TOTAL AREA	=	14,206 + 1,270
TOTAL AREA TO BE DRAINED	=	15,476 SQ. FT.
PROVIDED		
(14) 4" ROOF DRAINS	=	1,250 SQ. FT. EACH
(1) 6" ROOF DRAIN	=	2,500 SQ. FT.
TOTAL	=	1,250 x 14 + 2,500
TOTAL DRAINAGE PROVIDED	=	20,000 SQ. FT.

NOTE:
ROOF DRAINS SHALL COMPLY WITH SECTIONS 1105.1, 1105.2, 1105.3 OF THE FLORIDA BUILDING CODE – PLUMBING 2001 EDITION.

NOTES

1. SEE ARCHITECTURAL DWG'S FOR EXACT LOCATION OF ROOF DRAINS.
2. STORM DRAIN LINES @ 1/8"/FT PITCH.

CONDENSATE ISOMETRIC DIAGRAM
NOT TO SCALE

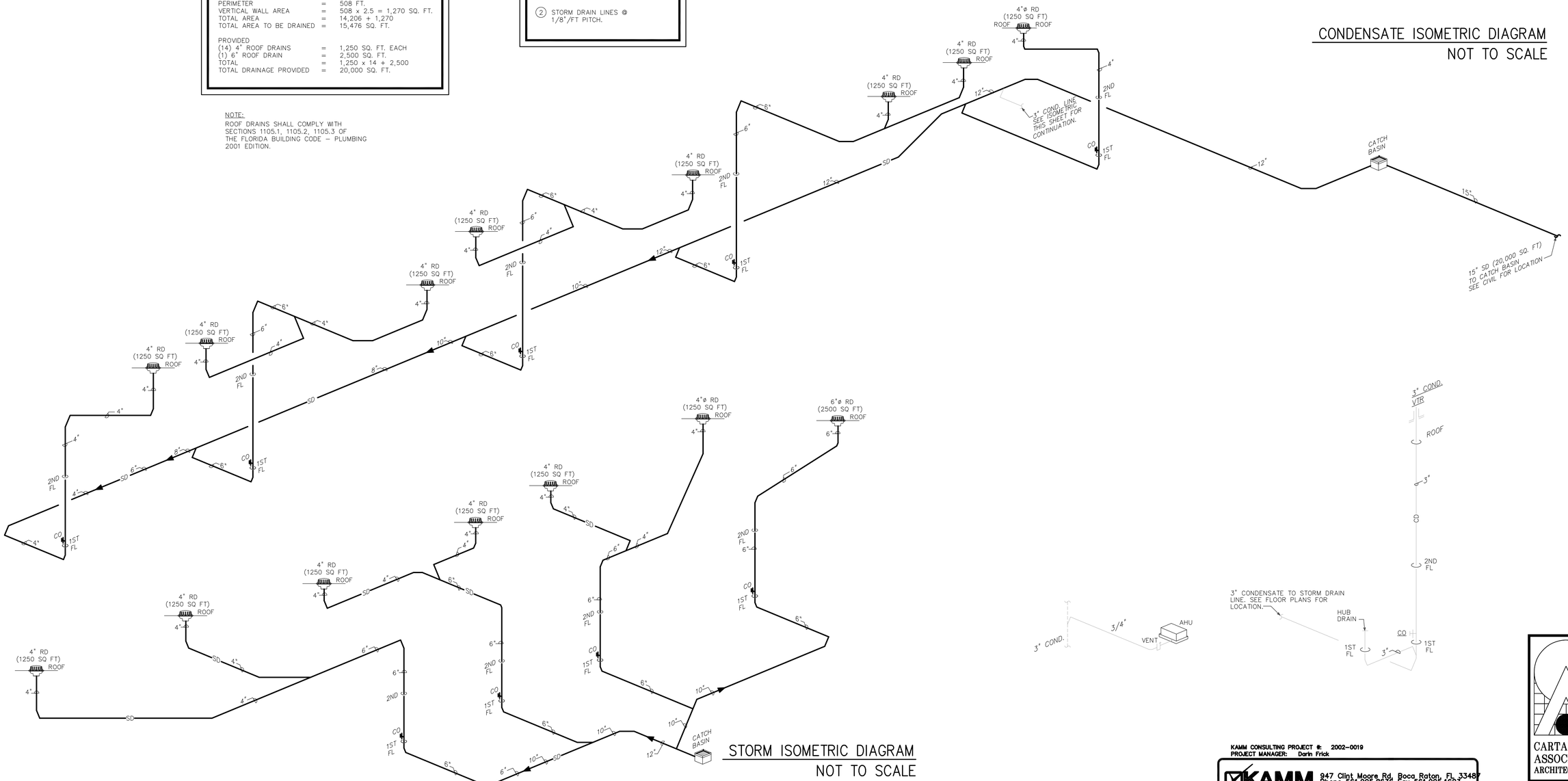

STORM ISOMETRIC DIAGRAM
NOT TO SCALE

RECORD DRAWINGS

KAMM CONSULTING PROJECT #: 2002-0019
PROJECT MANAGER: Darin Frick

KAMM Consulting
947 Clint Moore Rd. Boca Raton, FL 33487
Phone 561.995.8638 Fax 561.995.1623
engineering@kamm.to
Certification of Authorization #1689

DIRECTOR OF ELECTRICAL ENGINEERING
Lon T. Carter Florida License #35249 — 01-31-08 date

DIRECTOR OF MECHANICAL ENGINEERING
Mircea Pella Florida License #48798 — signed

CARTAYA & ASSOCIATES ARCHITECTS P.A.
3077 E. COMMERCIAL BLVD. SUITE 201
FT. LAUDERDALE, FLORIDA 33308
771-2724 FAX 776-4280

NO.	DATE	ISSUED FOR	BY
1	01/08	RECORD DRAWINGS	M.P.

DESIGNED M.P
DRAWN D.F.
CHECKED M.P.
PROJ. ENGR. D.F.

MIRCEA PELLA P.E.
No. #48798

HAZEN AND SAWYER
Environmental Engineers & Scientists
4000 Hollywood Boulevard, Suite 750N
Hollywood, Florida 33021
(954) 987-0066

SCALE 1/8" = 1'-0"

CONTRACT: –
CLIENTS PROJECT:
ENGINEERS PROJECT: 40406
CAD REFERENCE: 40406A-01

H:\40406\001\HallandBch.jpg

CITY OF HALLANDALE BEACH
UTILITIES DEPARTMENT

6 MGD MEMBRANE SOFTENING W.T.P.

NF PROCESS BUILDING
STORM & CONDENSATE
ISOMETRIC DIAGRAM

DATE: JANUARY 2008
SHEET: 162 OF 162
DRAWING: P-9

City of Hallandale Beach
Water Treatment Plant
High Service Pump Replacement

Attachment F
Broward County
Construction Permit
Permit No: 0131028-074-WC

The attached permit is part of the Contract Documents.
The Contractor shall comply with all permit conditions.

WATER TREATMENT PLANT CONSTRUCTION PERMIT

Broward County – MW (Log #14280)
High Service Pump Replacement
May 31, 2018

ELECTRONIC CORRESPONDENCE

PERMITTEE:
City of Hallandale Beach
Steven Parkinson, P.E., Director
630 NW 2nd Street
Hallandale Beach, FL 33009

PWS ID NUMBER: 4060573
PERMIT NUMBER: 0131028-074-WC
DATE OF ISSUE: May 31, 2018
EXPIRATION DATE: May 31, 2023
COUNTY: Broward
PROJECT: High Service Pump Replacement

This permit is issued under the provisions of Chapter 403, Florida Statutes (F.S.), and Florida Administrative Code (F.A.C.) Chapters 62-4, 62-550, 62-555 and 62-560. The above named permittee is hereby authorized to perform the work or operate the facility shown on the application and approved drawings, plans, and other documents attached hereto or on file with the Department and made a part hereof and specifically described as follows:

TO CONSTRUCT: Four (4) new variable speed horizontal split-case, double suction high service pumps, discharge header piping replacement, and removal of five (5) existing high service pumps.

PROPOSED CONSTRUCTION INCLUDES:

1. Installation of the following components:
   - Four (4) 300 horsepower horizontal split-case, double suction high service pumps;
   - Variable frequency drives;
   - Updating the existing suction header with a 30-inch diameter;
   - Steel framing system;
   - Associated piping, isolation, pump controls, valves, and instrumentation.

IN ACCORDANCE WITH: Application, preliminary design report, drawings, specifications, and other applicable documentation submitted to this office.

LOCATION: Hallandale Beach WTP, 630 NW 2nd Street, Hallandale Beach, FL 33009

Work must be conducted in accordance with the General and Specific Conditions, attached hereto.

Issued this 31st day of May, 2018.

STATE OF FLORIDA DEPARTMENT OF HEALTH IN BROWARD COUNTY

05/31/2018

Rafael Reyes Date
Environmental Engineering Director
RR/ev

Attachments

cc: George A. Brown, P.E., Senior Associate, Hazen and Sawyer

General Conditions

The permittee shall be aware of and operate under the Permit Conditions below. These applicable conditions are binding upon the permittee and enforceable pursuant to Chapter 403, Florida Statutes. [F.A.C. Rule 62-555.533(1)]

1. The terms, conditions, requirements, limitations and restrictions set forth in this permit, are "permit conditions" and are binding and enforceable pursuant to Sections 403.141, 403.727, or 403.859 through 403.861, F.S. The permittee is placed on notice that the Department will review this permit periodically and may initiate enforcement action for any violation of these conditions.

2. This permit is valid only for the specific processes and operations applied for and indicated in the approved drawings or exhibits. Any unauthorized deviation from the approved drawings, exhibits, specifications, or conditions of this permit may constitute grounds for revocation and enforcement action by the Department.

3. As provided in Subsections 403.087(6) and 403.722(5), F.S., the issuance of this permit does not convey any vested rights or any exclusive privileges. Neither does it authorize any injury to public or private property or any invasion of personal rights, nor any infringement of federal, state, or local laws or regulations. This permit is not a waiver of or approval of any other department permit that may be required for other aspects of the total project which are not addressed in this permit.

4. This permit conveys no title to land or water, does not constitute State recognition or acknowledgment of title, and does not constitute authority for the use of submerged lands unless herein provided and the necessary title or leasehold interests have been obtained from the State. Only the Trustees of the Internal Improvement Trust Fund may express State opinion as to title.

5. This permit does not relieve the permittee from liability for harm or injury to human health or welfare, animal, or plant life, or property caused by the construction or operation of this permitted source, or from penalties therefore; nor does it allow the permittee to cause pollution in contravention of Florida Statutes and Department rules, unless specifically authorized by an order from the Department.

6. The permittee shall properly operate and maintain the facility and systems of treatment and control (and related appurtenances) that are installed and used by the permittee to achieve compliance with the conditions of this permit, as required by Department rules. This provision includes the operation of backup or auxiliary facilities or similar systems when necessary to achieve compliance with the conditions of the permit and when required by Department rules.

7. The permittee, by accepting this permit, specifically agrees to allow authorized Department personnel, upon presentation of credentials or other documents as may be required by law and at reasonable times (reasonable time may depend on the nature of the concern being investigated), access to the premises where the permitted activity is located or conducted to:

    a. Have access to and copy any records that must be kept under conditions of the permit;
    b. Inspect the facility, equipment, practices, or operations regulated or required under this permit; and
    c. Sample or monitor any substances or parameters at any location reasonably necessary to assure compliance with this permit or Department rules.

8. If, for any reason, the permittee does not comply with or will be unable to comply with any condition or limitation specified in this permit, the permittee shall immediately provide the Department with the following information:

    a. A description of and cause of noncompliance; and
    b. The period of noncompliance, including dates and times; or, if not corrected, the anticipated time the noncompliance is expected to continue, and steps being taken to reduce, eliminate, and prevent recurrence of the noncompliance. The permittee shall be responsible for any and all damages which may result and may be subject to enforcement action by the Department for penalties or for revocation of this permit.

9. In accepting this permit, the permittee understands and agrees that all records, notes, monitoring data and other information relating to the construction or operation of this permitted source which are submitted to the Department may be used by the Department as evidence in any enforcement case involving the permitted source arising under the Florida Statutes or Department rules, except where such use is prescribed by Sections 403.111 and 403.73, F.S. Such evidence shall only be used to the extent it is consistent with the Florida Rules of Civil Procedure and appropriate evidentiary rules.

10. The permittee agrees to comply with changes in Department rules and Florida Statutes after a reasonable time for compliance; provided, however, the permittee does not waive any other rights granted by Florida Statutes or Department rules. A reasonable time for compliance with a new or amended surface water quality standard, other than those standards addressed in Rule 62-302.500, shall include a reasonable time to obtain or be denied a mixing zone for the new or amended standard.

11. This permit is transferable only upon Department approval in accordance with Rule 62- 4.120 and 62-730.300, F.A.C., as applicable. The permittee shall be liable for any non-compliance of the permitted activity until the transfer is approved by the Department.

12. This permit or a copy thereof shall be kept at the work site of the permitted activity.

13. This permit also constitutes:

    a. Determination of Best Available Control Technology (BACT)
    b. Determination of Prevention of Significant Deterioration (PSD)
    c. Certification of compliance with State Water Quality Standards (Section 401, PL 92-500)
    d. Compliance with New Source Performance Standards

14. The permittee shall comply with the following:

    a. Upon request, the permittee shall furnish all records and plans required under Department rules. During enforcement actions, the retention period for all records will be extended automatically unless otherwise stipulated by the Department.

    b. The permittee shall hold at the facility or other location designated by this permit records of all monitoring information (including all calibration and maintenance records and all original strip chart recordings for continuous monitoring instrumentation) required by the permit, copies of all reports required by this permit, and records of all data used to complete the application for this permit. These materials shall be retained at least three years from the date of the sample, measurement, report, or application unless otherwise specified by Department rule.

    c. Records of monitoring information shall include:
        i. the date, exact place, and time of sampling or measurements;
        ii. the person responsible for performing the sampling or measurements;
        iii. the dates analyses were performed;
        iv. the person responsible for performing the analyses;
        v. the analytical techniques or methods used;
        vi. the results of such analyses.

15. When requested by the Department, the permittee shall within a reasonable time furnish any information required by law which is needed to determine compliance with the permit. If the permittee becomes aware the relevant facts were not submitted or were incorrect in the permit application or in any report to the Department, such facts or information shall be corrected promptly.

Specific Conditions

A. Regulatory Section

1. All construction must be in accordance with this permit. Before commencing work on project changes for which a construction permit modification is required per 62-555.536(1), the permittee shall submit to the Department a written request for a permit modification. Each such request shall be accompanied by one copy of a revised construction permit application, the proper processing fee and one copy of either a revised preliminary design report or revised drawings, specifications and design data. [F.A.C. Rule 62-555.536].

2. Permitted construction or alteration of public water supply systems must be supervised during construction by a professional engineer registered in the State of Florida if the project was designed under the responsible charge of a professional engineer licensed in the State of Florida. The permittee must retain the service of a professional engineer registered in the State of Florida to observe that construction of the project is in accordance with the engineering plans and specifications as submitted in support of the application for this permit. [F.A.C. Rule 62-555.520(3)].

3. If prehistoric or historic artifacts, such as pottery or ceramics, stone tools or metal implements, dugout canoe remains, or any other physical remains that could be associated with Native American cultures, or early colonial or American settlement are encountered at any time within the project site area, the permitted project should cease all activities involving subsurface disturbance in the immediate vicinity of such discoveries. The permittee, or other designee, should contact the Florida Department of State, Division of Historical Resources, Compliance and Review Section at 850.245.6333 or 800.847.7278, as well as the appropriate permitting agency office. Project activities should not resume without verbal and/or written authorization from the Division of Historical Resources and the permitting agency. In the event that unmarked human remains are encountered during permitted activities, all work shall stop immediately and the proper authorities notified in accordance with Section 872.05, *Florida Statutes*.

4. In accordance with General Condition #11 of this permit, this permit is transferable only upon Department approval. Persons proposing to transfer this permit must apply jointly for a transfer of the permit within 30 days after the sale or legal transfer of ownership of the permitted project that has not been cleared for service by the Department using form, 62-555.900(8), Application for Transfer of a PWS Construction Permit along with the appropriate fee. [F.A.C. Rule 62-555.536(5)]

5. This permit satisfies Drinking Water permitting requirements only and does not authorize construction or operation of this facility prior to obtaining all other necessary permits from other program areas within the Department, or required permits from other state, federal, or local agencies.

6. If gasoline contamination is found at the construction site, work shall be stopped and the proper authorities notified. With the approval of the Department, ductile iron pipe and fittings, and solvent resistant gaskets materials shall be used in the contaminated area. The ductile pipe shall be used in the contaminated area. The ductile iron pipe shall extend 100 feet beyond any solvent noted. Any contaminated soil that is excavated shall be placed on an impermeable mat, covered with waterproof covering, and held for disposal. <u>If the site cannot be properly cleaned, then consultation with the Department is necessary prior to continuing with the project construction.</u>

7. This permit does not constitute approval of construction on jurisdictional wetland areas; therefore such approval must be obtained separately from the Water Management District or from DEP ERP Section, as applicable, Permittee shall provide a copy of the permit approval to the Department if a water main installation involves activities on wetlands.

8. Suppliers of water shall notify the appropriate DEP District Office or ACHD and affected water customers by no later than the previous business day before initiating any planned permanent or temporary conversion from free chlorine to chloramines or vice versa for disinfection. [F.A.C. Rule 62-555.350(10)(c)]

9. Permittee shall ensure that the well and drinking water treatment facilities will be protected to prevent tampering, vandalism, and sabotage as required by Rule 62-555.315(1) & 62-555.320(5), F.A.C.

B. Construction Standards

1. All products, including paints, which shall come into contact with potable water, either directly or indirectly, shall conform with National Sanitation Foundation (NSF) International, Water Chemicals Codex, Food Chemicals Codex, American Water Works Association (AWWA) Standards and the Food and Drug Administration, as provided in Rule 62-555.320(3), F.A.C.

2. Water supply facilities, including mains, pipe, fittings, valves, fire hydrants and other materials shall be installed in accordance with the latest applicable AWWA Standards and Department rules and regulations. The system shall be pressure and leak tested in accordance with AWWA Standard C600 C603, or C605, as applicable, and disinfected in accordance with AWWA Standard C651-653, as well as in accordance with Rule 62-555.340, F.A.C.

3. The installation or repairs of any public water system, or any plumbing in residential or nonresidential facilities providing water for human consumption, which is connected to a public water system shall be lead free in accordance with Rule 62-555.322, F.A.C.

4. Permittee shall maintain vertical clearance and horizontal separation between water mains and sanitary sewers, storm sewers, etc. unless approved otherwise by the Department, as provided in Rule 62-555.314, F.A.C., and Section 8.6 of Recommended Standards for Water Works, a manual adopted by reference in Rule 62-555.330(3), F.A.C.

5. The new or altered aboveground piping at the drinking water treatment plant shall be color coded and labeled as recommended in Section 2.14 of "Recommended Standards for Water Works, 1997 Edition". [F.A.C. Rule 62-555.320(10)]

6. Permittee shall ensure that there shall be no cross-connection with any non-potable water source in accordance with Rule 62-555.360, F.A.C.

C. Operational Requirements

1. The supplier of water shall operate and maintain the public water system so as to comply with applicable standards in F.A.C. Rule 62-550 and 62-555.350.

2. The permittee shall provide an operation and maintenance manual for the new or altered treatment facilities to fulfill the requirements under subsection 62-555.350(13), F.A.C. The manual shall contain operation and control procedures, and preventative maintenance and repair procedures, for all plant equipment and shall be made available for reference at the plant or at a convenient location near the plant. Bound and indexed equipment manufacturer manuals shall be considered sufficient to meet the requirements of the subsection.

3. The permittee shall have complete record drawings produced for the project in accordance with Rule 62-555.530(4), F.A.C.

4. The permittee or suppliers of water shall telephone the State Warning Point (SWP), at 1-800-320-0519 immediately (i.e., within two hours) after discovery of any actual or suspected sabotage or security breach, or any suspicious incident, involving a public water system in accordance with the F.A.C. Rule 62-555.350(10).

D. Monitoring Provisions

1. Permittee shall follow the guidelines of Chapters 62-550, 62-555, and 62-560, F.A.C., regarding public drinking water system standards, monitoring, reporting, permitting, construction, and operation.

2. The water treatment plant shall maintain throughout the distribution system a minimum combined chlorine residual of 0.6 mg/l or its equivalent. A minimum system pressure of 20 psi must be maintained throughout the system. Also, safety equipment shall be provided and located outside of chlorine room.

E. Clearance Requirements

1. The permittee must instruct the engineer of record to request system clearance from the Department within sixty (60) days of completion of construction, testing and disinfecting the system. Bacteriological test results shall be considered unacceptable if the test were completed more than 60 days before the Department received the results. [F.A.C. Rule 62-555.340(2)(c)]
2. Permitted construction or alteration of a public water system may not be placed into service until a letter of clearance has been issued by this Department. [F.A.C. Rule 62-555.345] Prior to placing this project into service, Permittee shall submit, at a minimum, all of the following to the Department for evaluation and approval for operation, as provided in Rules 62-555.340 and 62-555.345, F.A.C.:
   a. the engineer's *Certification of Construction Completion and Request for Clearance to Place Permitted PWS Components Into Operation* {DEP Form 62-555.900(9)};
   b. certified record drawings, if there are any changes noted for the permitted project; and
   c. two consecutive days of satisfactory bacteriological results upstream and downstream of the proposed construction.
   d. submit the copies of all applicable NSF Certifications
3. Review Fee: Submission of a check, payable to the Florida Department of Health in Broward County, in the amount of $250.00, in accordance with Broward County Administrative Code, Chapter 36, Part VIII.

<u>In order to facilitate the issuance of a letter of clearance, the Department requests that all the information in E2 and E3 above, be submitted as one package.</u>

City of Hallandale Beach
Water Treatment Plant
High Service Pump Replacement

Attachment G
Broward County
Environmental Protection and Growth Management Department Approvals

The attached permits are part of the Contract Documents. The Contractor shall comply with all permit conditions.

Environmental Protection and Growth Management Department
PLANNING AND DEVELOPMENT MANAGEMENT DIVISION
1 North University Drive, Building A, Suite 102 Plantation, Florida 33324 954-357-6666 FAX 954-357-6521

Broward County Environmental Review Approval Certificate

Issue Date: 3/1/2018

ER Review #: 000412940

Title of Drawings: High Service Pump Replacement

Project#: 40621-000

Plan Last Revision Date: 20-FEB-18

Bldg Dept Jurisdiction: Hallandale Beach

Legal Description: **Plat Name:** UNPLATTED **Lot:** **Block:**

Address: 630 NW 2nd ST, Hallandale Beach, Fl. 33009

Construction Type: Other

This approval is issued in accordance with Sec. 27.66 of the Broward County Natural Resource Protection Code. This approval is specific for the plans and description described on this approval, any changes in footprint, Lot #, or bedrooms or use will require a new approval.

APPROVED

- ☑ **ATTENTION** THE BUILDING DEPARTMENT IS NOT REQUIRED TO ELECTRONICALLY UPDATE BUILDING PERMIT AND CO FOR THIS PROJECT
- ☑ **COMMENTS** EXISTING WATER TREATMENT PLANT - PUMP REPLACEMENT ONLY - REMOVE 5 EXISTING & INSTALL 4 NEW WATER PUMPS

If a building permit is not applied for within 30 days of the Environmental Review Approval, plans must be re-submitted to the Planning and Development Management Division for re-evaluation.

Environmental Reviewer Name: Greg Whitaker

Environmental Protection and Growth Management Department
PLANNING AND DEVELOPMENT MANAGEMENT DIVISION
1 North University Drive, Building A, Suite 102 Plantation, Florida 33324 954-357-6666 FAX 954-357-6521

Broward County Transportation Concurrency Satisfaction Certificate

*** Please note that this approval does not constitute Environmental Review Approval. You will still need the Environmental Approval Certificate to submit to the Building Department.**

Issue Date: 03/01/2018 **DR Review #:** 0057948

Application Number: 000412940

Title of Drawings: High Service Pump Replacement **Project#:** 40621-000

Plan Last Revision Date: 20-FEB-18 **Bldg Dept Jurisdiction:** Hallandale Beach

Legal Description: **Plat Name:** UNPLATTED
Plat Number: **Book:** **Page:** **Lot:** **Block:**

Address: 630 NW 2nd ST, Hallandale Beach, Fl. 33009

Construction Type: Other

This approval is issued in accordance with Sec. 27.66 of the Broward County Natural Resource Protection Code. This approval is specific for the plans and description described on this approval. Any changes in footprint, Lot #, or bedrooms or use will require a new approval.

Development Review

☑ **BUILDING OFFICIAL:** No Impact/Concurrency Fees Due to Broward County Planning & Development Management Division
REMOVAL AND REPLACEMENT OF WATER PUMPS, PIPING AND ELECTRICAL FOR EXISTING WATER TREATMENT PLANT.
Receipt# 0057948

☑ **TRANSPORTATION CONCURRENCY SATISFACTION:** Certificate is hereby issued

*Any revision to these plans requires a new development review by the division.

If a building permit is not applied for within 30 days of the Environmental Review Approval, plans must be re-submitted to the Planning and Development Management Division for re-evaluation.

Development Reviewer Name: Monica Randino