CITY OF HALLANDALE BEACH
400 SOUTH FEDERAL HIGHWAY
HALLANDALE BEACH, FL 33009
PH: 954-457-1333
WWW.COHB.ORG/SOLICIATIONS

Hallandale Beach
PROGRESS. INNOVATION. OPPORTUNITY.

INVITATION TO BID (ITB)
BID # FY 2017-2018-017

CITY OF HALLANDALE BEACH
WATER TREATMENT PLANT HIGH SERVICE PUMPS REPLACEMENT PROJECT

EXHIBIT B – DRAWINGS / PLANS

Hallandale Beach
PROGRESS. INNOVATION. OPPORTUNITY.

CITY OF HALLANDALE BEACH
WATER TREATMENT PLANT
HIGH SERVICE PUMP REPLACEMENT

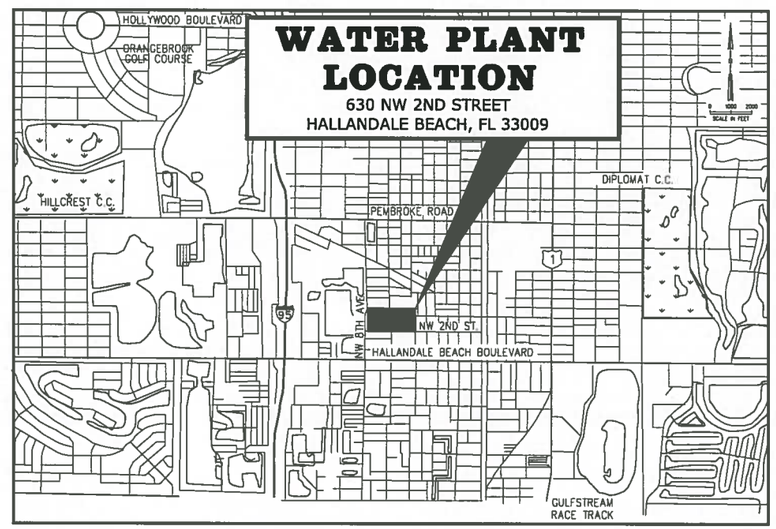

LOCATION MAP

NTS

BID SET

AUGUST 21, 2018

Hazen

HAZEN AND SAWYER
4000 HOLLYWOOD BOULEVARD, SUITE 750N
HOLLYWOOD, FLORIDA 33021
CERTIFICATE OF AUTHORIZATION NO. : 2771

GEORGE A. BROWN
LICENSE
No 56076
8/20/18
STATE OF FLORIDA
PROFESSIONAL ENGINEER

TITLE SHEET AND LOCATION MAP
SHEET 1 OF 57
DRAWING No. G-01

BID SET

PLOT DATE: 8/8/2018 8:39 AM BY: JOHNSON

XREF:

File = C:\ams\hazen-pw\dms48278\G-01 Saved by Laura M Save date = 4/26/2018 1:54 PM

LIST OF DRAWINGS

GENERAL

Sheet Number	Sheet Title
G-01	TITLE SHEET AND LOCATION MAP
G-02	LIST OF DRAWINGS AND SPECIAL INSPECTION PLAN
G-03	NOTES
G-04	ABBREVIATIONS, SYMBOLS AND LEGEND
G-05	STAGING PLAN

CIVIL

C-01	EXISTING SITE PLAN
C-02	PROPOSED SITE PLAN
C-03	YARD PIPING KEY MAP
C-04	TANK LEVEL TRANSMITTER REPLACEMENT
C-05	TEMPORARY HIGH SERVICE PUMP STATION
C-06	SUCTION PIPING MODIFICATIONS
C-07	CIVIL DETAILS - SHEET 1
C-08	CIVIL DETAILS - SHEET 2

MECHANICAL

M-01	HIGH SERVICE PUMPS DEMOLITION PLAN
M-02	HIGH SERVICE PUMPS DEMOLITION PHOTOS SHEET 1
M-03	HIGH SERVICE PUMPS DEMOLITION PHOTOS SHEET 2
M-04	HIGH SERVICE PUMPS PROPOSED PLAN
M-05	HIGH SERVICE PUMPS SECTION
M-06	MECHANICAL DETAILS SHEET 1
M-07	MECHANICAL DETAILS SHEET 2
M-08	MECHANICAL DETAILS SHEET 3

STRUCTURAL

S-01	HIGH SERVICE PUMPS DEMOLITION PLAN
S-02	HIGH SERVICE PUMPS PROPOSED PLAN
S-03	SECTIONS
S-04	DETAILS

ARCHITECTURAL

A-01	PUMP STATION LIFE SAFETY PLAN
A-02	FLOOR PLAN
A-03	SOUTH ELEVATION
A-04	EAST ELEVATION
A-05	SCHEDULES AND DETAILS

ELECTRICAL

SHEET NUMBER	SHEET TITLE
E-01	LEGEND AND SYMBOLS
E-02	GENERAL NOTES, ABBREVIATIONS, AND DUCTBANK SCHEDULE
E-03	OVERALL PLANT SINGLE LINE DIAGRAM - DEMOLITION AND TEMPORARY
E-04	OVERALL PLANT SINGLE LINE DIAGRAM - MODIFIED
E-05	OVERALL SITE PLAN
E-06	PARTIAL SITE PLAN
E-07	GENERATOR BUILDING - PLAN
E-08	HIGH SERVICE PUMP ROOM - DEMOLITION PLAN
E-09	HIGH SERVICE PUMP ROOM - DEMOLITION PHOTOS
E-10	HIGH SERVICE PUMP ROOM - GROUNDING AND POWER PLAN
E-11	HIGH SERVICE PUMP ROOM - LIGHTING PLAN
E-12	SWBD-HSPS SINGLE LINE DIAGRAM
E-13	CONTROL ONE LINE DIAGRAM, RISER DIAGRAM, AND PANEL SCHEDULE
E-14	ELEMENTARY CONTROL SCHEMATICS
E-15	CONDUIT AND WIRE SCHEDULES
E-16	CONDUIT AND WIRE SCHEDULES AND DETAILS
E-17	ELECTRICAL DETAILS - SHEET 1
E-18	ELECTRICAL DETAILS - SHEET 2

INSTRUMENTATION

I-01	INSTRUMENTATION SYMBOLS AND LEGEND
I-02	SCADA NETWORK DIAGRAM
I-03	HIGH SERVICE PUMP STATION P&ID
I-04	SWGR-MF-2 AND SWBD-HSPS P&ID
I-05	INSTRUMENTATION DETAILS

HVAC

H-01	HVAC NOTES
H-02	HVAC SCHEDULES
H-03	HVAC PLAN
H-04	HVAC SECTIONS AND DETAILS

SPECIAL INSPECTION PLAN

INSPECTION OF MASONRY CONSTRUCTION (RE:TMS 402/ACI 530/ASCE 5 AND TMS 602/ACI350. 1/ASCE6)

INSPECTION ITEM	FREQUENCY OF INSPECTION
VERIFY COMPLIANCE WITH THE APPROVED SUBMITTALS	PERIODIC
A. AS MASONRY CONSTRUCTION BEGINS VERIFY THAT THE FOLLOWING ARE IN COMPLIANCE:	
1. PROPORTIONS OF SITE-PREPARED MORTAR	PERIODIC
2. CONSTRUCTION OF MORTAR JOINTS	PERIODIC
3. LOCATION OF REINFORCEMENT	PERIODIC
B. PRIOR TO GROUTING THE FOLLOWING SHALL BE VERIFIED TO ENSURE COMPLIANCE:	
1. GROUT SPACE	PERIODIC
2. GRADE, TYPE, AND SIZE OR REINFORCEMENT AND ANCHOR BOLTS	PERIODIC
3. PLACEMENT OR REINFORCEMENT, CONNECTIONS, AND ANCHORAGES	PERIODIC
4. PROPORTIONS OF SITE-PREPARED GROUT	PERIODIC
5. CONSTRUCTION OF MORTAR JOINTS	PERIODIC
C. VERIFY DURING CONSTRUCTION	
1. SIZE AND LOCATION OF STRUCTURAL ELEMENTS	PERIODIC
2. TYPE, SIZE AND LOCATION OF ANCHORS, INCLUDING OTHER DETAILS OF ANCHORAGE OF MASONRY TO STRUCTURAL MEMBERS, FRAMES OR OTHER	PERIODIC
3. WELDING OF REINFORCEMENT	CONTINUOS
4. PREPARATION, CONSTRUCTION AND PROTECTION OF MASONRY DURING COLD WEATHER (TEMP BELOW 40°F) OR HOT WEATHER (TEMP ABOVE 90°F)	PERIODIC
5. OBSERVE PREPARATION OF GROUT SPECIMENS, MORTAR SPECIMENS, AND/OR PRISMS	PERIODIC

INSPECTION OF POST-INSTALLED ANCHORS AND DOWELS (RE:PRODUCT ICC-ES EVALUATION REPORT)

INSPECTION ITEM	FREQUENCY OF INSPECTION
A. ADHESIVE ANCHORS AND REINFORCEMENT DOWELS	
1. VERIFY DRILL BIT TYPE AND SIZE	PERIODIC
2. HOLE DEPTH AND CLEANING PROCEDURE	PERIODIC
3. PRODUCT DESCRIPTION INCLUDING NAME, ROD TYPE, DIAMETER, AND LENGTH	PERIODIC
4. ADHESIVE EXPIRATION DATE	PERIODIC
5. PROPER INSTALLATION TECHNIQUE FOR ADHESIVE ANCHORS	PERIODIC
B. MECHANICAL ANCHORS	
1. VERIFY DRILL BIT TYPE AND SIZE	PERIODIC
2. HOLE DEPTH AND CLEANING PROCEDURE	PERIODIC
3. PRODUCT DESCRIPTION INCLUDING NAME, ANCHOR TYPE, DIAMETER, AND LENGTH	PERIODIC
4. PROPER INSTALLATION TECHNIQUE FOR MECHANICAL ANCHOR AND TIGHTENING TORQUE	PERIODIC
C. UNDERCUT ANCHORS	
1. VERIFY DRILL BIT TYPE AND SIZE	PERIODIC
2. HOLE DEPTH AND CLEANING PROCEDURE	PERIODIC
3. PRODUCT DESCRIPTION INCLUDING NAME, ANCHOR TYPE, DIAMETER, AND LENGTH.	PERIODIC
4. PROPER INSTALLATION TECHNIQUE FOR UNDERCUT ANCHORS AND TIGHTENING TORQUE	PERIODIC
D. SCREW ANCHORS	
1. VERIFY DRILL BIT TYPE AND SIZE	PERIODIC
2. HOLE DEPTH AND CLEANING PROCEDURE	PERIODIC
3. PRODUCT DESCRIPTION INCLUDING NAME, ANCHOR TYPE, DIAMETER, AND LENGTH	PERIODIC
4. PROPER INSTALLATION TECHNIQUE FOR SCREW ANCHORS AND TIGHTENING TORQUE	PERIODIC

INSPECTION OF CONCRETE CONSTRUCTION (RE:2015 IBC TABLE 1705.3)

INSPECTION ITEM	FREQUENCY OF INSPECTION
A. STRUCTURAL CAST-IN PLACE CONCRETE	
1. INSPECTION OF REINFORCING STEEL MATERIALS AND PLACEMENT	PERIODIC
2. INSPECTION OF REINFORCING STEEL WELDING IN ACCORDANCE WITH TABLE 1705.2.2 ITEM 2B, PER AWS D1.4, ACI 318.5.2	PERIODIC
3. INSPECTION OF ANCHORS CAST IN CONCRETE WHERE ALLOWABLE LOADS HAVE BEEN INCREASED OR WHERE STRENGTH DESIGN IS USED	CONTINUOUS
4. INSPECTION OF ANCHORS POST-INSTALLED IN HARDENED CONCRETE MEMBERS	PERIODIC
5. VERIFYING USE OF REQUIRED DESIGN MIX	PERIODIC
6. AT THE TIME FRESH CONCRETE IS SAMPLED TO FABRICAT SPECIMENS FOR STRENGTH TESTS, PERFORM SLUMP AND AIR CONTENT TEST, AND DETERMINE THE TEMPERATURE OF CONCRETE	CONTINUOUS
7. INSPECTION OF CONCRETE AND SHOTCRETE PLACEMENT FOR PROPER APPLICATION TECHNIQUE	CONTINUOUS
8. INSPECTION FOR MAINTENANCE OF SPECIFIED CURING TEMPERATURE AND TECHNIQUES	PERIODIC
9. INSPECTION FOR ERECTION OF PRECAST CONCRETE MEMBERS	PERIODIC
10. VERIFICATION OF IN-SITU CONCRETE STRENGTH PRIOR TO REMOVAL OF SHORES AND FORMS FROM BEAMS AND STRUCTURAL SLABS	PERIODIC
11. INSPECT FORMWORK FOR SHAPE, LOCATION AND DIMENSIONS OF THE CONCRETE MEMBER BEING FORMED	PERIODIC

REV	ISSUED FOR	DATE	BY
2	BID SET	08-06-18	G.B.
1	REVISED FOR BUILDING DEPT.	06-15-18	G.B.

PROJECT ENGINEER:	G.A.B.
DESIGNED BY:	G.A.B.
DRAWN BY:	G.B.
CHECKED BY:	S.J.

IF THIS BAR DOES NOT MEASURE 1" THEN DRAWING IS NOT TO FULL SCALE 0 1/2" 1"

SHAJAN JOYKUTTY, PE NO. 43323

8/20/18

Hazen

HAZEN AND SAWYER
4000 HOLLYWOOD BOULEVARD, SUITE 750N
HOLLYWOOD, FLORIDA 33021
CERTIFICATE OF AUTHORIZATION NO. : 2771

CITY OF HALLANDALE BEACH

WATER TREATMENT PLANT
HIGH SERVICE PUMP REPLACEMENT

Hallandale Beach

LIST OF DRAWINGS AND SPECIAL INSPECTION PLAN

DATE: AUGUST 2018
HAZEN NO.: 40621-000
CONTRACT NO.: 1
DRAWING NUMBER: G-02

File: C:\DATA\ACD-FILES\40621\G-02 Saved By: JJOHNSON Save Date: 2018/08/10 8:28 AM
PLOT DATE: 2018/08/10 8:54:17 AM BY: JJOHNSON

GENERAL NOTES

1. DRAWINGS THAT ILLUSTRATE EXISTING SITE, STRUCTURES, PIPING, ELECTRICAL AND EQUIPMENT ARE BASED UPON RECORD DRAWINGS AVAILABLE UPON REQUEST FOR GENERAL INFORMATIONAL PURPOSES ONLY. REFERENCE THE SECTION ENTITLED "SUMMARY OF WORK".
2. FIELD OBSERVATIONS INDICATE THAT FIELD CONDITIONS DO NOT FULLY MATCH THE ABOVE REFERENCED RECORD DRAWINGS.
3. ALL ELEVATIONS ARE BASED ON THE NATIONAL GEODETIC VERTICAL DATUM OF 1929 (NGVD '29)
4. LOCATION, SIZE, MATERIAL, ALIGNMENT AND ELEVATIONS OF EXISTING FACILITIES HAVE BEEN DETERMINED FROM AVAILABLE RECORDS. THIS INFORMATION IS FURNISHED AS A GUIDE FOR THE CONTRACTOR. THE ENGINEER AND THE OWNER DO NOT GUARANTEE THE ACCURACY OF THESE DATA. THE CONTRACTOR SHALL BE FULLY RESPONSIBLE FOR DETERMINING THE LOCATION AND PROTECTING ALL TYPES OF UTILITIES AND STRUCTURES ENCOUNTERED DURING THE COURSE OF OPERATION ON THIS PROJECT.
5. CONTRACTOR RETAINS FULL RESPONSIBILITY FOR FIELD VERIFICATION OF ALL IMPROVEMENTS TO BE REMOVED FOR THIS WORK. VERIFICATION SHALL INCLUDE STRUCTURAL, ARCHITECTURAL, HVAC, PLUMBING, PROCESS PIPING, ELECTRICAL, IRRIGATION, CONTROLS, EQUIPMENT, FILTER MEDIA AND ANY AND ALL OTHER EXISTING EQUIPMENT WITHIN THE BOUNDARY OF THE WORK, WHETHER SHOWN OR NOT.
6. THE CONTRACTOR IS REQUIRED TO OBTAIN WRITTEN APPROVAL FROM THE ENGINEER FOR ANY DEVIATIONS FROM THE PLANS AND/OR SPECIFICATIONS.
7. THE CONTRACTOR SHALL FIELD VERIFY ALL DIMENSIONS AND ELEVATIONS PRIOR TO COMMENCEMENT OF CONSTRUCTION AND SHALL NOTIFY THE ENGINEER IMMEDIATELY OF ANY REQUIRED PLAN DEVIATIONS.
8. THE CONTRACTOR SHALL BE RESPONSIBLE FOR OBTAINING A DEWATERING PERMIT FROM THE SOUTH FLORIDA WATER MANAGEMENT DISTRICT IF REQUIRED.
9. RESTRAINED JOINT PIPE SHALL BE USED FOR ALL PIPING ON THIS PROJECT. THRUST BLOCKS SHALL NOT BE PERMITTED.
10. CONTRACTOR SHALL PROVIDE A MINIMUM VERTICAL CLEARANCE OF 6" BETWEEN ALL LINES THAT CROSS. CROSSINGS WITH POTABLE WATER LINES SHALL BE AS SHOWN ON THE DRAWINGS.
11. THE CONTRACTOR SHALL RECORD ELEVATIONS OF EXISTING BURIED UTILITIES AT ALL ENCOUNTERED CROSSINGS WITH NEW WORK.
12. ALL CONNECTIONS TO EXISTING PIPING SHALL BE MADE UNDER THE DIRECTION OF THE CITY.
13. MINIMUM DEPTH OF COVER FOR ALL UNDERGROUND PIPING SHALL BE 36" EXCEPT WHERE SHOWN OTHERWISE ON PLANS.
14. PIPE DEFLECTION SHALL NOT EXCEED 75% OF THE MAXIMUM DEFLECTION RECOMMENDED BY THE MANUFACTURER.
15. THE CONTRACTOR SHALL BE RESPONSIBLE AT ALL TIMES THROUGHOUT THE DURATION OF CONSTRUCTION AND UNTIL ACCEPTANCE OF THE WORK FOR THE PROTECTION OF EXISTING AND NEWLY INSTALLED UTILITIES FROM DAMAGE OR DISRUPTION OF SERVICE.
16. THE CONTRACTOR SHALL ADJUST TO FINAL GRADE ALL EXISTING UTILITY CASTINGS INCLUDING VALVE BOXES, MANHOLES, HAND HOLES, PULL BOXES, INLETS AND SIMILAR STRUCTURES IN CONSTRUCTION AREA TO BE OVERLAID WITH ASPHALT.
17. EXISTING BURIED PIPE AND CONDUIT 2" DIAMETER AND SMALLER IS NOT NECESSARILY SHOWN. ELECTRICAL AND INSTRUMENTATION DUCT BANKS NOT SHOWN. WHEN EXCAVATING, THE CONTRACTOR SHALL TAKE ALL NECESSARY PRECAUTIONS TO AVOID DAMAGE TO UNDERGROUND UTILITIES.
18. THE CONTRACTOR SHALL MAKE EXPLORATORY EXCAVATIONS TO VERIFY LOCATIONS AND ELEVATIONS OF UNDERGROUND UTILITIES THAT MAY INTERFERE WITH THE WORK. THE NUMBER OF EXPLORATORY EXCAVATIONS SHALL BE SUFFICIENT TO DETERMINE ALIGNMENT, LOCATION AND ELEVATION.
19. THE WORK TO BE PERFORMED UNDER THESE CONTRACT DOCUMENTS IS AT A FUNCTIONING WATER TREATMENT PLANT WITH A PERMITTED WATER SUPPLY WELLFIELD. THE CONTRACTOR SHALL COMPLY WITH REQUIREMENTS OF THE SPECIFICATIONS, REGULATORY AGENCIES, AND FACILITY OPERATIONS STAFF AT ALL TIMES.
20. THE CONTRACTOR IS ADVISED THAT ALL FITTINGS THAT MAY BE REQUIRED TO MAKE UP VERTICAL ALIGNMENT MAY NOT BE SHOWN ON THE YARD PIPING PLANS.
21. CONTRACTOR SHALL RESTORE ALL LANDSCAPING AND SODDING IMPACTED BY CONSTRUCTION TO ITS ORIGINAL CONDITION OR BETTER.
22. CONTRACTOR SHALL DISPOSE OF ALL DEMOLISHED MATERIALS IN ACCORDANCE WITH LOCAL, STATE AND FEDERAL REGULATIONS.
23. ALL IMPACTED CONSTRUCTION AREAS SHALL BE RETURNED TO PRECONSTRUCTION CONDITIONS OR BETTER BY CONTRACTOR.

EROSION AND SEDIMENT CONTROL NOTES

1. THE CONTRACTOR SHALL PREPARE, OBTAIN APPROVAL OF AND IMPLEMENT A STORM WATER POLLUTION PREVENTION PLAN PER THE SPECIFICATION TITLED "TEMPORARY EROSION AND SEDIMENT CONTROL".
2. CONTRACTOR SHALL EMPLOY BEST MANAGEMENT PRACTICES THROUGHOUT CONSTRUCTION IN ORDER TO ENSURE POLLUTION PREVENTION. CONTRACTOR SHALL COMPLY WITH ALL LOCAL STATE AND OTHER GOVERNMENTAL ENVIRONMENTAL REGULATIONS THROUGHOUT CONSTRUCTION.
3. DURING CONSTRUCTION ALL CATCH BASINS TO BE EQUIPPED WITH FILTER FABRIC AND HAY BALES OVER GRATES.
4. SILT FENCES SHALL BE INSTALLED AS NECESSARY TO CONTROL OR PREVENT DISCHARGE OF SEDIMENT ONTO ADJACENT UNDISTURBED AREAS, OR OFF-SITE AREAS.
5. ALL AREAS DISTURBED DURING CONSTRUCTION SHALL BE STABILIZED WITHIN A REASONABLE PERIOD OF TIME TO ASSURE MINIMUM EROSION OF SOILS.
6. NO LAND CLEARING OR GRADING SHALL BEGIN UNTIL ALL EROSION CONTROL MEASURES HAVE BEEN INSTALLED.
7. ALL EXPOSED AREAS SHALL BE SODDED AS SPECIFIED WITHIN 30 DAYS OF FINAL GRADING.
8. MAINTAIN EROSION CONTROL MEASURES AFTER EACH RAIN AND AT LEAST ONCE A WEEK.
9. THIS PLAN SHALL NOT BE CONSIDERED ALL INCLUSIVE AS THE CONTRACTOR SHALL TAKE ALL NECESSARY PRECAUTIONS TO PREVENT SOIL SEDIMENT FROM LEAVING THE SITE.
10. CONTRACTOR SHALL COMPLY WITH ALL STATE AND LOCAL ORDINANCES THAT APPLY.
11. ADDITIONAL EROSION AND SEDIMENT CONTROL MEASURES WILL BE INSTALLED IF DEEMED NECESSARY BY CITY, COUNTY, AND STATE OF FLORIDA ON SITE INSPECTION, AT NO ADDITIONAL COST TO THE OWNER.
12. LAND DISTURBING ACTIVITIES SHALL NOT COMMENCE UNTIL APPROVAL TO DO SO HAS BEEN RECEIVED BY GOVERNING AUTHORITIES.
13. IF INSTALLATION OF STORM DRAINAGE SYSTEM (WHERE SHOWN ON THE DRAWINGS) SHOULD BE INTERRUPTED BY WEATHER OR NIGHTFALL, THE PIPE ENDS SHALL BE COVERED WITH FILTER FABRIC.
14. ALL EXISTING STRUCTURES, FENCING, TREES, AND ETC. SHOW TO BE REMOVED ON THE DEMOLITION DRAWINGS SHALL BE REMOVED AND DISPOSED OF OFF SITE. BURNING WILL NOT BE ALLOWED ON-SITE.
15. CONTRACTOR SHALL BE RESPONSIBLE TO TAKE WHATEVER MEANS NECESSARY TO ESTABLISH PERMANENT SOIL STABILIZATION.
16. CONTRACTOR IS TO PROVIDE EROSION CONTROL/SEDIMENTATION BARRIER (HAY BALES OR SILT FENCE CURTAIN) TO PREVENT SILTATION OF ADJACENT PROPERTY, STREETS, STORM SEWERS AND WATER WAYS. IN ADDITION CONTRACTOR SHALL PLACE STONE, MULCH OR OTHER SUITABLE MATERIAL ON GROUND IN AREAS WHERE CONSTRUCTION RELATED TRAFFIC IS TO ENTER AND EXIT SITE IN THE OPINION OF THE ENGINEER AND/OR LOCAL AUTHORITIES IF EXCESSIVE QUANTITIES OF EARTH ARE TRANSPORTED OFF SITE EITHER BY NATURAL DRAINAGE OR BY VEHICULAR TRAFFIC. THE CONTRACTOR IS TO REMOVE AND CLEAN SAID EARTH TO THE SATISFACTION OF THE ENGINEER AND/OR AUTHORITIES. EROSION CONTROL BARRIER SHALL BE ESTABLISHED AS THE FIRST ITEM OF WORK.

PROPERTY AND FLOOD NOTES

PROPERTY INFO:

FOLIO No.: 514228010010

ADDRESS:

630 NW 2ND STREET
HALLANDALE BEACH, FL 33009

LOCATION INFO:

TOWNSHIP: 51S
RANGE: 42E
SECTION: 28
LATITUDE: N25° 59' 18.24"
LONGITUDE: W80° 09' 18"

FLOOD INFO:

1. 100 YEAR FLOOD ELEVATION: 8.3 (NGVD 1929)
   SOURCE: BROWARD COUNTY FLOOD MAP MARCH, 2000.
2. FLOOD ZONE X (ABOVE 500 YEAR FLOOD PLAIN) PER FEMA DESIGNATIONS EFFECTIVE 8/18/2014.
3. FLOOD PANEL: 12011C0732H

REV	ISSUED FOR	DATE	BY
1	BID SET	08-06-18	G.B.

PROJECT ENGINEER:
DESIGNED BY: G.A.B.
DRAWN BY: G.B.
CHECKED BY:
IF THIS BAR DOES NOT MEASURE 1" THEN DRAWING IS NOT TO FULL SCALE (0 1/2" 1")

GEORGE A. BROWN, PE NO. 56076

Hazen
HAZEN AND SAWYER
4000 HOLLYWOOD BOULEVARD, SUITE 750N
HOLLYWOOD, FLORIDA 33021
CERTIFICATE OF AUTHORIZATION NO. : 2771

CITY OF HALLANDALE BEACH

WATER TREATMENT PLANT
HIGH SERVICE PUMP REPLACEMENT

Hallandale Beach

NOTES

DATE:	AUGUST 2018
HAZEN NO.:	40621-000
CONTRACT NO.:	1
DRAWING NUMBER:	G-03

BID SET

SYMBOLS

- SOLENOID
- MOTOR OPERATED
- BALL VALVE
- BUTTERFLY VALVE/DAMPER
- CHECK VALVE
- GATE VALVE
- PLUG VALVE
- THREE WAY VALVE
- PRESSURE REDUCING/ RELIEF VALVE
- PRESSURE REGULATING VALVE
- VENTURI METER
- FLAME ARRESTER
- HOSE BIBB (PLAN)
- HOSE BIBB (ELEVATION)
- MECHANICAL COUPLING
- HARNESSED MECHANICAL COUPLING
- GROOVED COUPLING
- HARNESSED EXPANSION JOINT
- EXPANSION JOINT
- GAUGE
- UNION
- MAGNETIC METER
- VENTURI METER
- FIRE HYDRANT
- MANHOLE
- SEALED MANHOLE
- PROPOSED PIPELINE/STRUCTURE
- EXISTING UTILITIES/STRUCTURE
- PROPOSED PIPELINE (DOUBLE LINE IF SCALE OF DRAWING PERMITS)
- WELDED JOINT
- FLANGED JOINT
- MECHANICAL JOINT
- SOCKET WELDED JOINT
- PROPOSED STRUCTURE OR FACILITY
- REDUCER (SINGLE LINE)
- REDUCER (DOUBLE LINE)
- CONCRETE PIPE SUPPORT

ABBREVIATIONS

VALVES, FITTINGS, ETC.

ARV	AIR RELIEF VALVE
BV	BALL VALVE
BF	BLIND FLANGE
BFV	BUTTERFLY VALVE
CGV	CHLORINE GAS VALVE UNDER VACUUM
CV	CHECK VALVE
CPLG	COUPLING
ED	EQUIPMENT DRAIN
EXP JT	EXPANSION JOINT
FH	FIRE HYDRANT
FTG	FITTING
FLG	FLANGE
FD	FLOOR DRAIN
GV	GATE VALVE
HB	HOSE BIBB
LR	LONG RADIUS
MJ	MECHANICAL JOINT
MOV	MOTOR OPERATED VALVE
NPT	NATIONAL PIPE THREAD
PE	PLAIN END
PV	PLUG VALVE
PS	PUMP STATION
PRV	PRESSURE RELIEF VALVE
RD	ROOF DRAIN
SOV	SOLENOID OPERATED VALVE
THD	THREADED
VAC	VACUUM

PIPING

CU	COPPER OR CUBIC
DIP	DUCTILE IRON PIPE
FM	FORCE MAIN
GSP	GALVANIZED STEEL PIPE
IPS	IRON PIPE SIZE
PVC	POLYVINYLCHLORIDE
PCCP	PRECAST CONCRETE CYLINDER PIPE
RCP	REINFORCED CONCRETE PIPE

GENERAL

A/C	AIR CONDITIONER
AL, ALUM	ALUMINUM
APPROX	APPROXIMATE
AFF	ABOVE FINISHED FLOOR
ARCH	ARCHITECTURAL
AS	ANTISCALANT
BD	BLOWDOWN
BLK	BLOCK
BOTT	BOTTOM
BP	BID PACKAGE
BLDG	BUILDING
BSP	BACTERIOLOGICAL SAMPLING POINT
BWD	BACKWASH DRAIN
CB	CATCH BASIN
CA	SODIUM HYDROXIDE (CAUSTIC)
CC	CENTER TO CENTER
CHK'D	CHECKERED
CL	CENTER LINE
CLG	CHLORINE GAS
CLS	CHLORINE SOLUTION
CO	CLEAN OUT
CN	CONCENTRATE WATER
CLGV	CHLORINE GAS - VACUUM
CLR	CLEAR
COL	COLUMN
CO	COMPANY
CONC	CONCRETE
CONST	CONSTRUCTION
CONT	CONTINUOUS
CSD	CLEANING SOLUTION DRAIN
CSR	CLEANING SOLUTION RETURN
CS	CHLORINE SOLUTION
CSS	CLEANING SOLUTION SUPPLY
CW	CONDITIONED WATER
D	DRAIN
DET	DETAIL
DIAG	DIAGONAL
DIA	DIAMETER
DIM	DIMENSION
DISCH	DISCHARGE
DWL	DOWEL
DN	DOWN
DWG	DRAWING
EA	EACH
EE	EACH END
EF	EACH FACE
EW	EACH WAY
ECC	ECCENTRIC
EFF	EFFLUENT
ELEC	ELECTRIC
EL, ELEV	ELEVATION
EOP	EDGE OF PAVEMENT
EQUIP	EQUIPMENT
EXH	EXHAUST
EXIST, EX	EXISTING
EXP	EXPANSION
EXT	EXTERIOR
FIN	FINISH
FE	FIRE EXTINGUISHER
FL	FLOOR
FF	FINISH FLOOR
FLG	FLANGED
FM	FORCE MAIN
FR	FUEL RETURN
FS	FUEL SUPPLY
FSS	FLUSHING SOLUTION SUPPLY
FTG	FOOTING
FW	FINISHED WATER
GALV	GALVANIZED
GPM	GALLONS PER MINUTE
HP	HIGH POINT
HWL	HIGH WATER LEVEL
HORIZ	HORIZONTAL
HWH	HOT WATER HEATER
INFL	INFLUENT
INJ	INJECTION
ID	INSIDE DIAMETER
INSUL	INSULATION
INV	INVERT
JT	JOINT
LG	LONG
LN	LINE
LP	LOW POINT
LWL	LOW WATER LEVEL
MH	MANHOLE
MANUF	MANUFACTURER
MGD	MILLION GALLONS PER DAY
MO	MASONRY OPENING
MAX	MAXIMUM
MECH	MECHANICAL
MIN	MINIMUM
MJ	MECHANICAL JOINT
MOV	MOTOR OPERATED VALVE
NAVD	NORTH AMERICAN VERTICAL DATUM
NF	NANOFILTRATION
NPW	NON POTABLE WATER
NIC	NOT IN CONTRACT
NTS	NOT TO SCALE
NO	NUMBER
OC	ON CENTER
OPNG	OPENING
OD	OUTSIDE DIAMETER
OF	OUTSIDE FACE
OF	OVERFLOW
ORP	OXIDATION REDUCTION POTENTIAL
PCSR	PERMEATE CLEANING SOLUTION RETURN
PM	PERMEATE WATER
PW	POTABLE WATER
LBS/FT	POUNDS PER FOOT
P/L	PROPERTY LINE
RAD, R	RADIUS
RECIR	RECIRCULATION
RED	REDUCING
REHAB	REHABILITATION
REINF	REINFORCING
REQ'D	REQUIRED
RJ	RESTRAINED JOINT
RO	REVERSE OSMOSIS
ROT	ROTATED
R/W, ROW	RIGHT OF WAY
RW	RAW WATER
S	SAMPLE
SAN	SANITARY
SFA	SULFURIC ACID
SECT	SECTION
SEQ	SEQUESTRANT
SH	SODIUM HYPOCHLORITE
SHT	SHEET
SI	SCALE INHIBITOR
SL	SLUDGE
SOF	SOFTENED WATER
SPD	SUMP PUMP DISCHARGE
SPEC	SPECIFICATION
SQ	SQUARE
SS	SANITARY SEWER
SST	STAINLESS STEEL
STL	STEEL
STRUC	STRUCTURAL
SYMM	SYMMETRICAL
TBD	TO BE DETERMINED
TEMP	TEMPORARY
THK	THICK
TI	TEMPERATURE INDICATOR
TOC	TOP OF CONCRETE
TOS	TOP OF SLAB
TYP	TYPICAL
VTR	VENT THROUGH ROOF
VERT	VERTICAL
WTR	WATER
W/L	WATER LEVEL
WWF	WELDED WIRE FABRIC
W/	WITH

SECTION AND DETAIL IDENTIFICATION

SECTION IDENTIFICATION

(1) SECTION CUT ON DRAWING G-1:

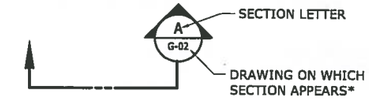

(2) ON DRAWING G-2 THIS SECTION IS IDENTIFIED AS:

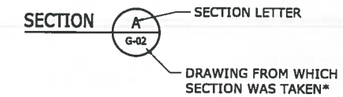

DETAIL IDENTIFICATION

(1) DETAIL CALL-OUT ON DRAWING G-1 AS:

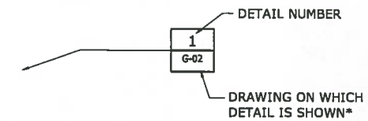

(2) ON DRAWING G-2 THIS DETAIL IDENTIFIED AS:

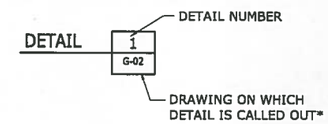

STANDARD DETAIL IDENTIFICATION

(1) DETAIL CALL-OUT ON PLAN OR SECTION:

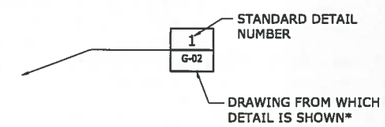

(2) ON DRAWING G-4 THIS DETAIL IDENTIFIED AS:

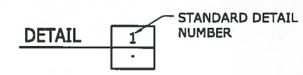

NOTE: IF PLAN AND SECTION (OR DETAIL CALL-OUT AND DETAIL) ARE SHOWN ON SAME DRAWING, DRAWING NUMBER IS REPLACE BY A LINE.

NOTES:

1. ELECTRICAL SYMBOLS SHOWN ON ELECTRICAL SHEETS.
2. FOR WELDING SYMBOLS USE AMERICAN WELDING SOCIETY STANDARD SYMBOLS. SEE AMERICAN INSTITUTE OF STEEL CONSTRUCTION MANUAL.

REV	ISSUED FOR	DATE	BY
1	BID SET	08-06-18	G.B.

PROJECT ENGINEER:
DESIGNED BY: G.A.B.
DRAWN BY: G.B.
CHECKED BY:

IF THIS BAR DOES NOT MEASURE 1" THEN DRAWING IS NOT TO FULL SCALE (0, 1/2", 1")

GEORGE A. BROWN LICENSE No. 58878 STATE OF FLORIDA PROFESSIONAL ENGINEER 8/20/18

GEORGE A. BROWN, PE NO. 58878

Hazen

HAZEN AND SAWYER
4000 HOLLYWOOD BOULEVARD, SUITE 750N
HOLLYWOOD, FLORIDA 33021
CERTIFICATE OF AUTHORIZATION NO. : 2771

CITY OF HALLANDALE BEACH

WATER TREATMENT PLANT
HIGH SERVICE PUMP REPLACEMENT

Hallandale Beach

ABBREVIATIONS, SYMBOLS AND LEGEND

DATE:	AUGUST 2018
HAZEN NO.:	40621-000
CONTRACT NO.:	1
DRAWING NUMBER:	G-04

File: C:\JOBS\HAZEN-PW\40621\G-04 Saved By: JJOHNSON Save Date: 2018/08/08 8:34 AM
PLOT DATE: 2018/08/08 8:36:45 AM BY: JJOHNSON

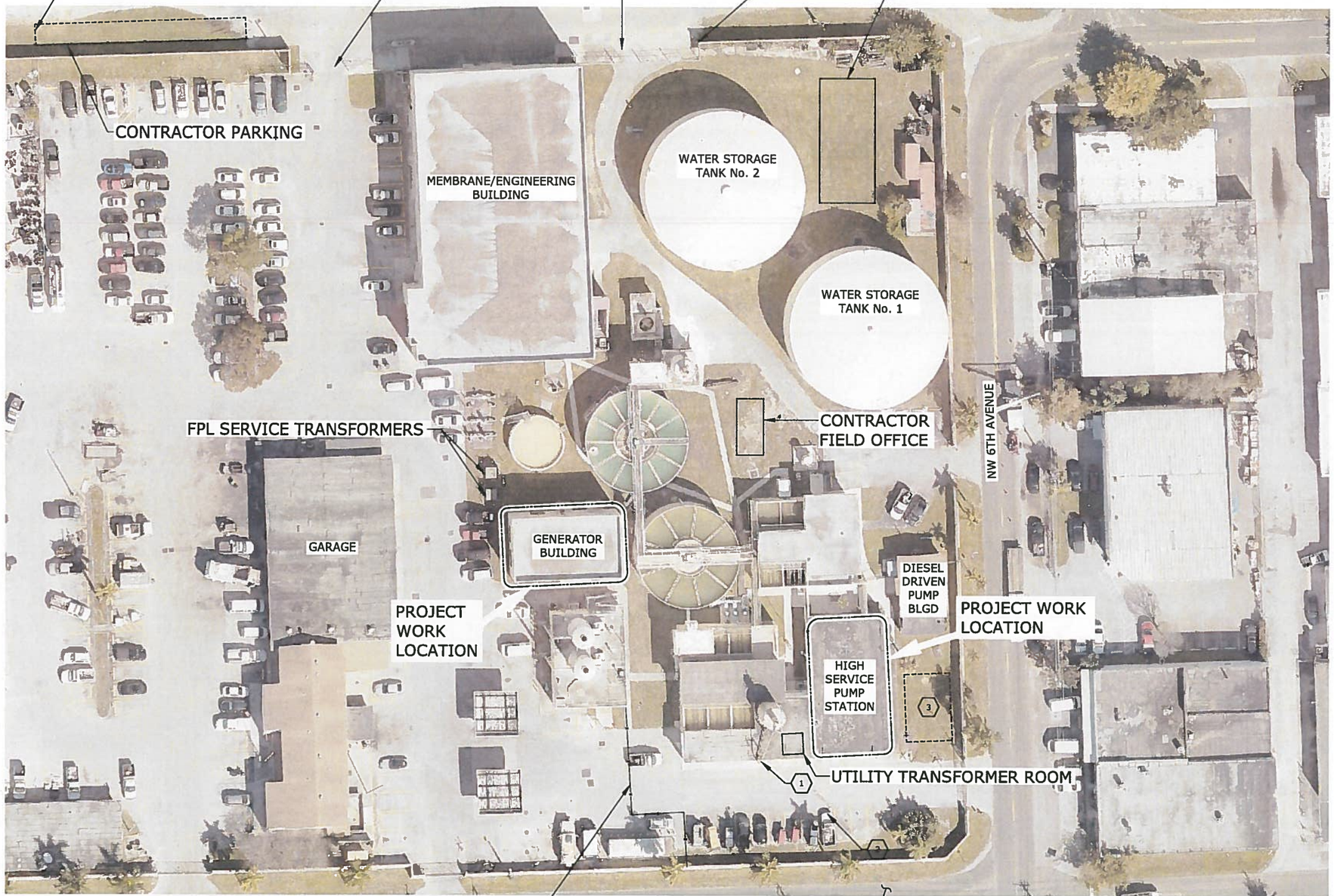

AERIAL PHOTO
NTS

ADDRESS:

630 NW 2ND STREET HALLANDALE BEACH, FL 33009

PROJECT SCOPE:

THE FOLLOWING IS A BRIEF LISTING OF THE MAJOR SCOPE ITEMS AND IS PRESENTED FOR INFORMATIONAL PURPOSES FOR THE PERMIT AGENCY REVIEWERS.

1. REMOVE FIVE EXISTING WATER PUMPS AND ALL ASSOCIATED PIPING AND ELECTRICAL.
2. INSTALL FOUR NEW WATER PUMPS, PIPING, ELECTRICAL AND CONTROLS.

STAGING AREA NOTES:

1. CONTRACTOR TO ENSURE THAT PLANT ACCESS ROADWAY IS KEPT OPEN. OBTAIN PRIOR WRITTEN APPROVAL BY THE CITY BEFORE RESTRICTING OR BLOCKING ACCESS.
2. CONTRACTOR SHALL REFER TO SPECIFICATION 01550 FOR ADDITIONAL REQUIREMENTS REGARDING SITE ACCESS AND STORAGE.
3. CONTRACTOR SHALL REFER TO SPECIFICATION 01510 FOR TEMPORARY UTILITIES AND SERVICES DURING CONSTRUCTION.

CONTRACTOR PARKING NOTES:

1. CONTRACTOR PARKING SHALL BE LIMITED TO THE SWALE AREA ALONG THE NORTHERN PERIMETER OF THE WATER PLANT.
2. DO NOT BLOCK ACCESS ROAD OR GATES.

CONTRACTOR FIELD OFFICE NOTES:

1. WATER CONNECTION IS AVAILABLE WITHIN 100' OF THE FIELD OFFICE. FURNISH AND INSTALL ALL NEEDED TEMPORARY PIPING. OBTAIN CITY PROVIDED WATER METER.
2. CONNECTION OF THE CONTRACTOR FIELD OFFICE TO THE SANITARY SEWER SYSTEM MAY NOT BE AVAILABLE. ASSUME PROVIDING A WASTE HOLDING TANK AND PUMP-OUT SERVICE.
3. CONTRACTOR SHALL DESIGN, FURNISH AND INSTALL ALL NEEDED PANELS AND WIRING FOR TEMPORARY POWER TO FIELD OFFICE.

KEYED NOTES:

1. THE WATER PLANT MUST RECEIVE LIME DELIVERY AT THIS LOCATION. COORDINATE WITH THE CITY TO ENSURE ACCESSIBILITY OF LIME TRUCKS DURING CONSTRUCTION.
2. COORDINATE WITH THE CITY TO REMOVE ITS VEHICLES AND EQUIPMENT FROM THIS LOCATION DURING CONSTRUCTION ACTIVITY.
3. AREA RESERVED FOR TEMPORARY HIGH SERVICE PUMPS.
4. TEMPORARY CONSTRUCTION ENTRANCE SIGN TO BE DESIGNED, FURNISHED AND INSTALLED BY THE CONTRACTOR. PROVIDE A MINIMUM OF FIVE SIGNS AROUND THE PERIMETER OF THE WATER PLANT TO DIRECT CONSTRUCTION TRAFFIC TO THE CONTRACTOR PARKING AND STAGING AREA.

REV	ISSUED FOR	DATE	BY
1	BID SET	08-06-18	G.B.

PROJECT ENGINEER:
DESIGNED BY: F.A.M.
DRAWN BY: L.M.S.
CHECKED BY:
IF THIS BAR DOES NOT MEASURE 1" THEN DRAWING IS NOT TO FULL SCALE 0 1/2" 1"

GEORGE A. BROWN LICENSE No. 56076 STATE OF FLORIDA PROFESSIONAL ENGINEER 8/20/18

GEORGE A. BROWN, P.E. No. 56076

Hazen

HAZEN AND SAWYER
4000 HOLLYWOOD BOULEVARD, SUITE 750N
HOLLYWOOD, FLORIDA 33021
CERTIFICATE OF AUTHORIZATION NO. : 2771

CITY OF HALLANDALE BEACH

WATER TREATMENT PLANT
HIGH SERVICE PUMP REPLACEMENT

Hallandale Beach

STAGING PLAN

DATE: AUGUST 2018
HAZEN NO.: 40621-000
CONTRACT NO.: 1
DRAWING NUMBER: G-05

BID SET

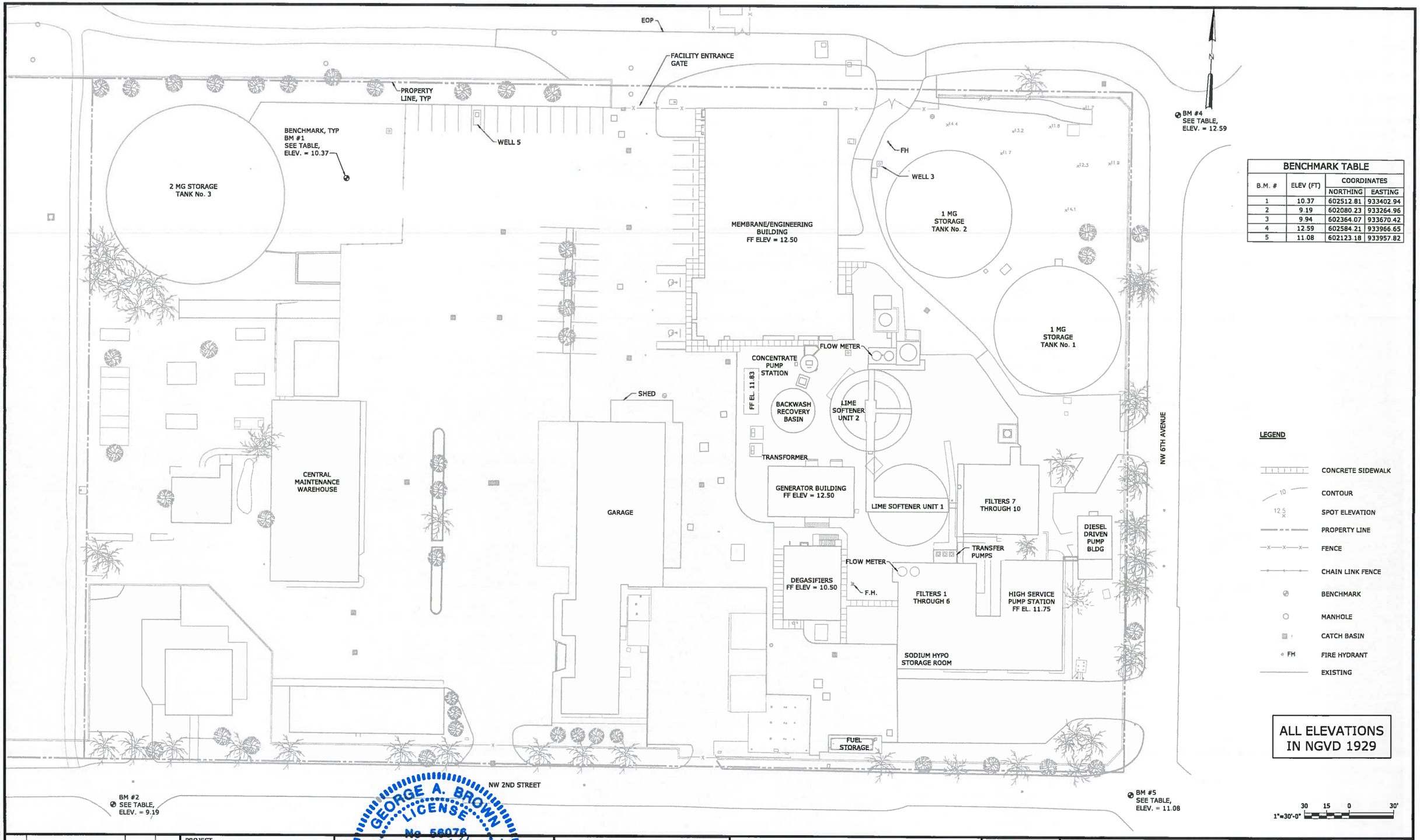

BENCHMARK TABLE

B.M. #	ELEV (FT)	COORDINATES	
		NORTHING	EASTING
1	10.37	602512.81	933402.94
2	9.19	602080.23	933264.96
3	9.94	602364.07	933670.42
4	12.59	602584.21	933966.65
5	11.08	602123.18	933957.82

REV	ISSUED FOR	DATE	BY
1	BID SET	08-06-18	G.B.

PROJECT ENGINEER:
DESIGNED BY: G.A.B.
DRAWN BY: G.B.
CHECKED BY:
IF THIS BAR DOES NOT MEASURE 1" THEN DRAWING IS NOT TO FULL SCALE 0 1/2" 1"

GEORGE A. BROWN LICENSE No. 58078 STATE OF FLORIDA PROFESSIONAL ENGINEER 8/20/18

GEORGE A. BROWN, P.E. No. 58078

Hazen

HAZEN AND SAWYER
4000 HOLLYWOOD BOULEVARD, SUITE 750N
HOLLYWOOD, FLORIDA 33021
CERTIFICATE OF AUTHORIZATION NO. : 2771

CITY OF HALLANDALE BEACH

WATER TREATMENT PLANT
HIGH SERVICE PUMP REPLACEMENT

Hallandale Beach

EXISTING SITE PLAN

DATE: AUGUST 2018
HAZEN NO.: 40621-000
CONTRACT NO.: 1
DRAWING NUMBER: C-01

File: C:\Users\JLEDS-PW\CAD\40621\C-01 Saved By: JOHNSON Save Date: 2018/08/08 8:11 AM
PLOT DATE: 2018/08/08 9:27:11 AM BY: JOHNSON

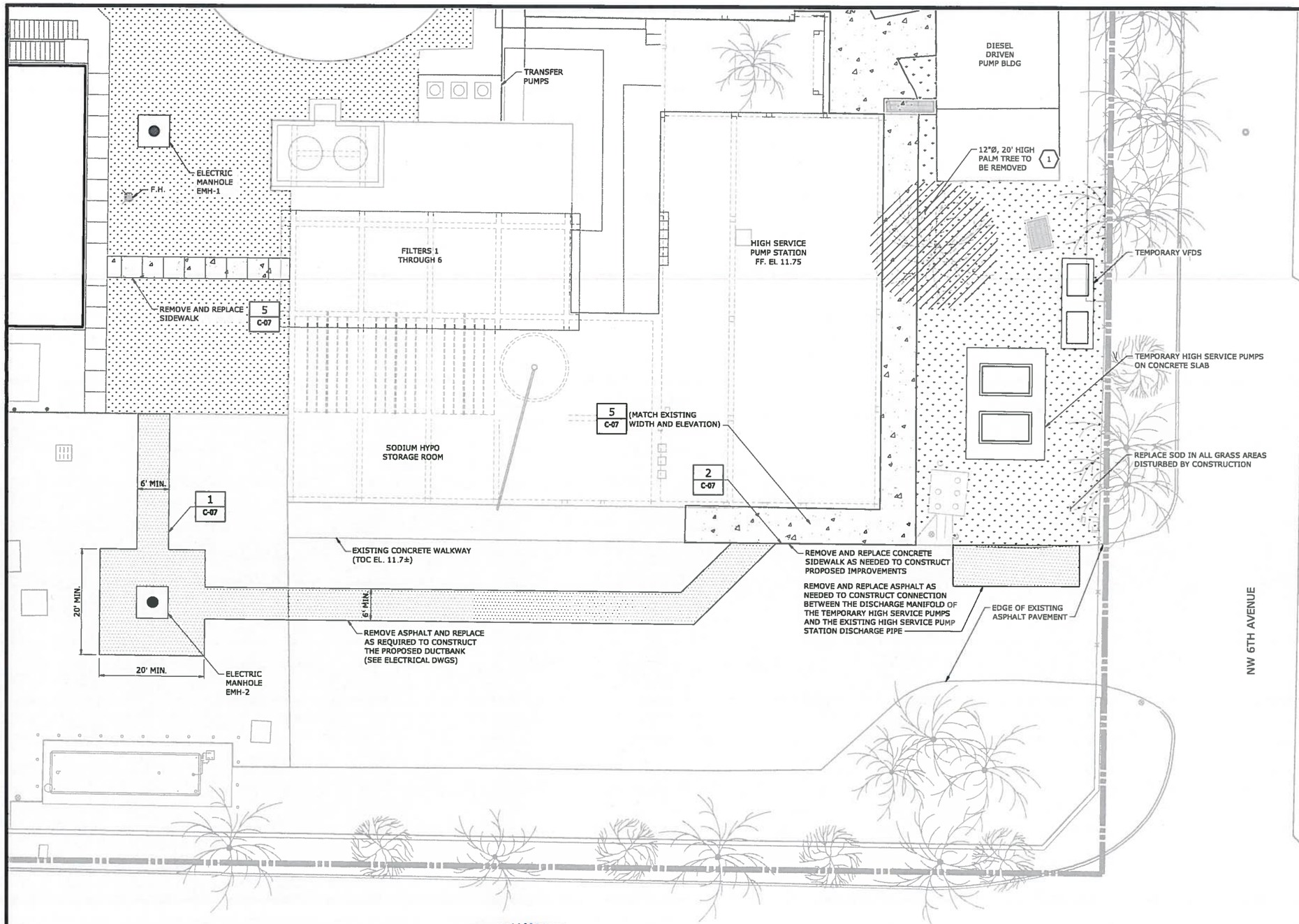

KEYED NOTES:

1. THE CONTRACTOR SHALL OBTAIN ALL PERMITS NEEDED FOR TREE REMOVAL.

NOTES:

1. REFER TO SPECIFICATION SECTION 11001 FOR REQUIREMENTS FOR THE TEMPORARY HIGH SERVICE PUMPS.
2. THE PIPING FOR THE TEMPORARY HIGH SERVICE PUMPS IS NOT SHOWN FOR CLARITY. SEE DRAWING C-05 FOR TEMPORARY PIPING FOR THE TEMPORARY HIGH SERVICE PUMPS.
3. AFTER RECEIVING WRITTEN APPROVAL BY THE ENGINEER, THE CONTRACTOR SHALL REMOVE THE TEMPORARY HIGH SERVICE PUMPS (ALONG WITH ALL ASSOCIATED TEMPORARY STRUCTURES, CONCRETE, PIPING, ETC.) AND RESTORE ALL SURFACES IMPACTED BY THE TEMPORARY IMPROVEMENTS.

ALL ELEVATIONS IN NGVD 1929

LEGEND:

- EXISTING
- PROPOSED
- TO BE REMOVED
- PROPOSED CONCRETE SIDEWALK
- PROPOSED SOD
- PROPOSED ASPHALT PAVEMENT REPLACEMENT

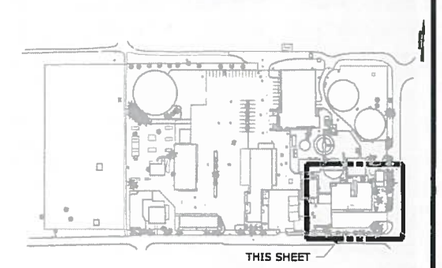

KEY MAP

1"=10'-0" 10 5 0 10'

REV	ISSUED FOR	DATE	BY
1	BID SET	08-06-18	G.B.

PROJECT ENGINEER:
DESIGNED BY: G.A.B.
DRAWN BY: G.B.
CHECKED BY:
IF THIS BAR DOES NOT MEASURE 1" THEN DRAWING IS NOT TO FULL SCALE 0 1/2" 1"

GEORGE A. BROWN LICENSE No 58076 STATE OF FLORIDA PROFESSIONAL ENGINEER 8/20/18

GEORGE A. BROWN, PE No. 58076

Hazen

HAZEN AND SAWYER
4000 HOLLYWOOD BOULEVARD, SUITE 750N
HOLLYWOOD, FLORIDA 33021
CERTIFICATE OF AUTHORIZATION NO. : 2771

CITY OF HALLANDALE BEACH

WATER TREATMENT PLANT
HIGH SERVICE PUMP REPLACEMENT

Hallandale Beach

PROPOSED SITE PLAN

DATE:	AUGUST 2018
HAZEN NO.:	40621-000
CONTRACT NO.:	1
DRAWING NUMBER:	C-02

File: C:\Users\AZZO-PW\Jet4271\C-02 Saved By: JJOHNSON Save Date: 2018/08/20 8:08 AM
PLOT DATE: 2018/08/20 10:24:50 AM BY: JJOHNSON

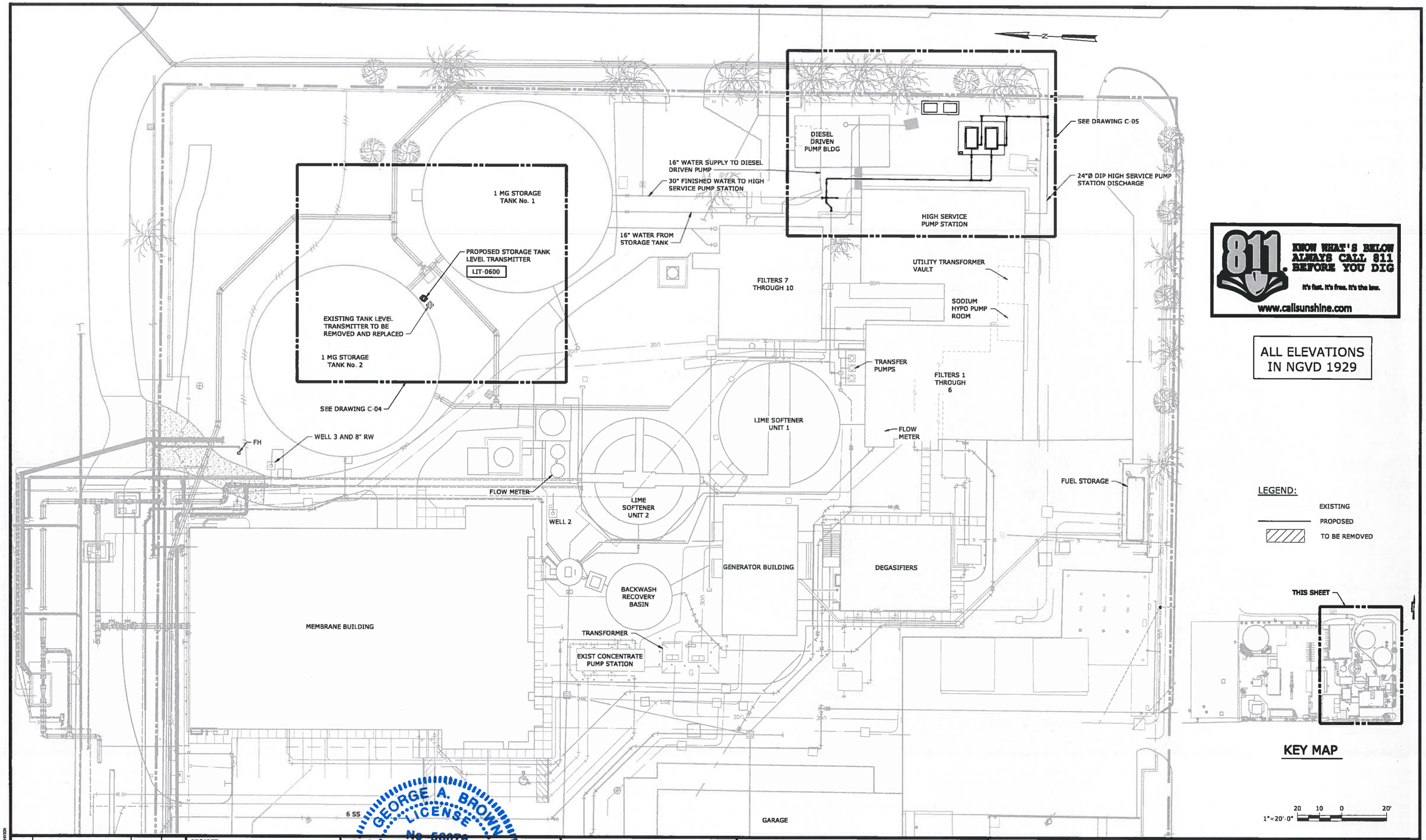

811. KNOW WHAT'S BELOW ALWAYS CALL 811 BEFORE YOU DIG
It's fast. It's free. It's the law.
www.callsunshine.com

ALL ELEVATIONS IN NGVD 1929

LEGEND:

- EXISTING
- PROPOSED
- TO BE REMOVED

REV	ISSUED FOR	DATE	BY
1	BID SET	08-06-18	G.B.

PROJECT ENGINEER:
DESIGNED BY: G.A.B.
DRAWN BY: G.B.
CHECKED BY:
IF THIS BAR DOES NOT MEASURE 1" THEN DRAWING IS NOT TO FULL SCALE 0 1/2" 1"

GEORGE A. BROWN LICENSE No. 56078 STATE OF FLORIDA PROFESSIONAL ENGINEER
8/20/18
GEORGE A. BROWN, PE NO. 56078

Hazen
HAZEN AND SAWYER
4000 HOLLYWOOD BOULEVARD, SUITE 750N
HOLLYWOOD, FLORIDA 33021
CERTIFICATE OF AUTHORIZATION NO. : 2771

CITY OF HALLANDALE BEACH

WATER TREATMENT PLANT
HIGH SERVICE PUMP REPLACEMENT

Hallandale Beach

YARD PIPING KEY MAP

DATE: AUGUST 2018
HAZEN NO.: 40621-000
CONTRACT NO.: 1
DRAWING NUMBER: C-03

File: C:\DWG\FLA2D-FP\DWG\40621\C-03 Saved By: JOHNSON Save Date: 2018/08/08 8:08 AM
PLOT DATE: 2018/08/10 10:25:43 AM BY: JOHNSON

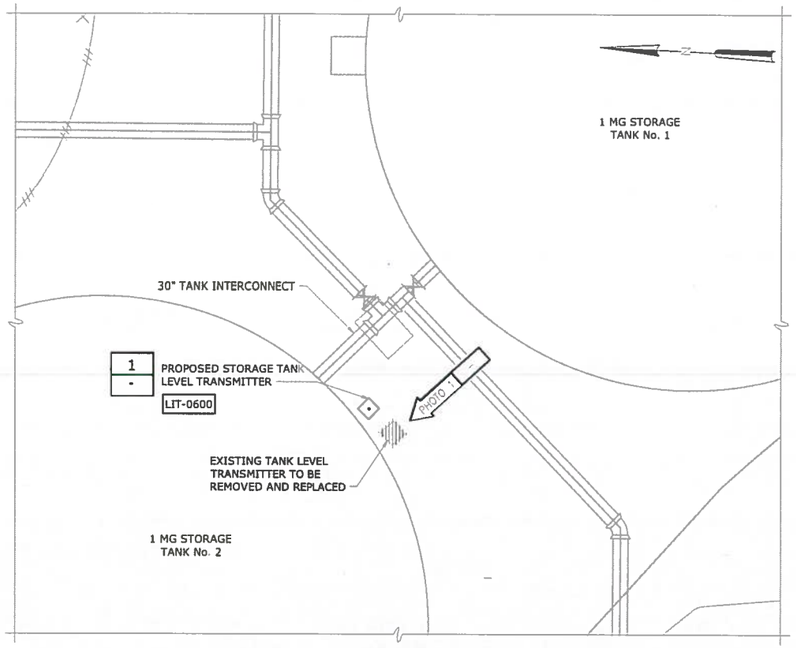

PLAN
1" = 10'-0"

STORAGE TANK LEVEL TRANSMITTER
PHOTO 1
NTS

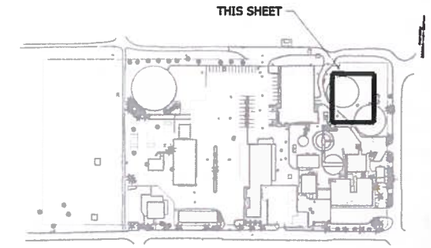

KEY MAP

811 KNOW WHAT'S BELOW ALWAYS CALL 811 BEFORE YOU DIG
It's fast. It's free. It's the law.
www.callsunshine.com

ALL ELEVATIONS
IN NGVD 1929

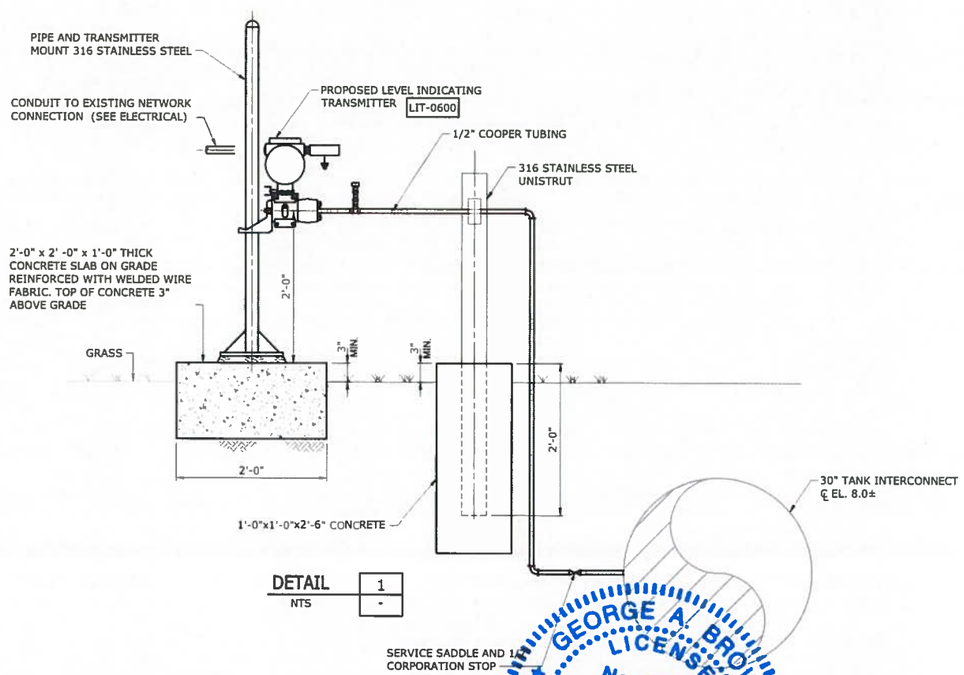

DETAIL 1
NTS

LEGEND:

EXISTING
PROPOSED
TO BE REMOVED
DWG PHOTO — ARROW SHOWS APPROXIMATE LOCATION AND DIRECTION OF PHOTOGRAPH

1"=1'-0" 12" 6 0 1'

GEORGE A. BROWN LICENSE No 56078 8/20/18 STATE OF FLORIDA PROFESSIONAL ENGINEER

REV	ISSUED FOR	DATE	BY
1	BID SET	08-06-18	G.B.

PROJECT ENGINEER:
DESIGNED BY: G.A.B.
DRAWN BY: G.B.
CHECKED BY:
IF THIS BAR DOES NOT MEASURE 1" THEN DRAWING IS NOT TO FULL SCALE 0 1/2" 1"

GEORGE A. BROWN, P.E. No. 56078

Hazen
HAZEN AND SAWYER
4000 HOLLYWOOD BOULEVARD, SUITE 750N
HOLLYWOOD, FLORIDA 33021
CERTIFICATE OF AUTHORIZATION NO. : 2771

CITY OF HALLANDALE BEACH

WATER TREATMENT PLANT
HIGH SERVICE PUMP REPLACEMENT

Hallandale Beach

TANK LEVEL TRANSMITTER
REPLACEMENT

DATE: AUGUST 2018
HAZEN NO.: 40621-000
CONTRACT NO.: 1
DRAWING NUMBER: C-04

BID SET

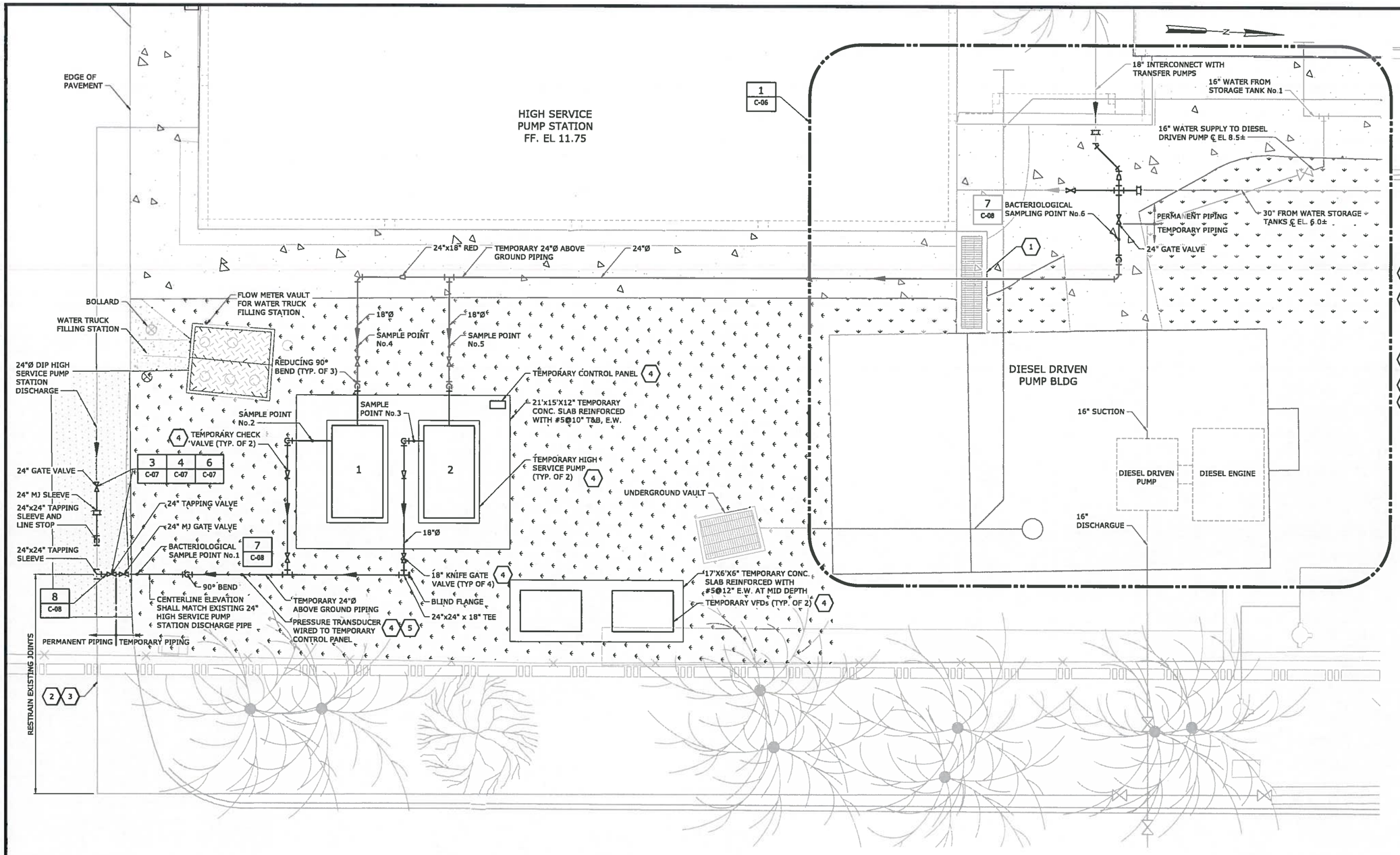

TEMPORARY HIGH SERVICE PUMPS

1" = 5'-0"

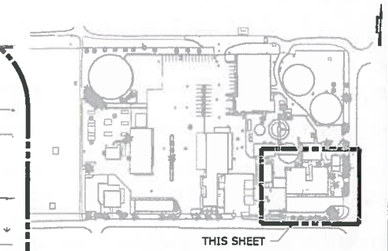

KEY MAP

KEYED NOTES:

1. EXISTING CONCRETE TRENCH WITH GRATING CONTAINING DIESEL FUEL PIPING.
2. EXPOSE ALL JOINTS ON EXISTING PIPING. CONFIRM JOINT TYPE. RESTRAIN ALL EXISTING JOINTS WITH SPLIT RING TYPE RESTRAINING DEVICES SUCH AS MEGALUG 1100HD BY EBAA IRON FOR PUSH-ON JOINTS OR MEGALUG 11005D BY EBAA IRON FOR MECHANICAL JOINTS.
3. REMOVE AND RESTORE ASPHALT AS REQUIRED TO INSTALL THE RESTRAINING DEVICES.
4. SUPPLIED BY TEMPORARY HIGH SERVICE PUMPS SUPPLIER.
5. ENCASE TEMPORARY CONTROL WIRING IN PVC CONDUIT TO PROTECT FROM DAMAGE.

NOTES:

1. REFER TO SPECIFICATION SECTION 01520 FOR ADDITIONAL REQUIREMENTS FOR SEQUENCING AND CONSTRUCTION CONSTRAINTS.
2. THIS DRAWING IS BASED UPON VARIOUS RECORD DRAWINGS. THE AVAILABLE RECORD DRAWINGS PROVIDE LIMITED DATA. NO INFORMATION IS AVAILABLE ON EXISTING UNDERGROUND ELECTRICAL, CONTROL WIRING, IRRIGATION OR PLUMBING IN THE AREA SHOWN. THE CONTRACTOR SHALL FIELD VERIFY LOCATIONS AND ELEVATION OF YARD PIPING AT ALL PROPOSED TIE-INS, CROSSINGS, REMOVAL AND/OR LINE STOPS TO ALLOW FOR PROPER ALIGNMENTS AND/OR CLEARANCES BETWEEN EXISTING AND PROPOSED IMPROVEMENTS.
3. CONSTRUCTION OF THE PROPOSED SUCTION PIPING MODIFICATIONS TO CONNECT THE PROPOSED TEMPORARY HIGH SERVICE PUMPS TO THE EXISTING 30-INCH PIPE FROM THE WATER STORAGE TANKS SHALL BE PERFORMED DURING A SHORT-TERM SHUTDOWN OF THE EXISTING HIGH SERVICE PUMP STATION. DURING THE SHORT-TERM SHUTDOWN OF THE EXISTING HIGH SERVICE PUMP STATION, THE CITY WILL OPERATE THE DIESEL DRIVEN PUMP.
4. REFER TO SPECIFICATION SECTION 11001 FOR REQUIREMENTS FOR TEMPORARY HIGH SERVICE PUMPS.
5. THE CONTRACTOR SHALL COORDINATE ALL PUMP STATION SHUT DOWNS WITH THE CITY.
6. UPON REMOVAL OF TEMPORARY HIGH SERVICE PUMPS, CONTRACTOR SHALL REMOVE SUCTION PIPING CONNECTION AND INSTALL A RESTRAINED MECHANICAL JOINT PLUG AT THE 24" GATE VALVE.
7. UPON REMOVAL OF TEMPORARY HIGH SERVICE PUMPS, CONTRACTOR SHALL REMOVE DISCHARGE PIPING CONNECTION AND INSTALL A RESTRAINED MECHANICAL JOINT PLUG AT THE TAPPING VALVE.
8. REMOVE AND REPLACE LAWN IRRIGATION PIPING, SPRINKLER HEADS, VALVES AND CONTROLS AS REQUIRED
9. RESTRAIN ALL PIPE JOINTS.

LEGEND:

- EXISTING
- PROPOSED
- PROPOSED CONCRETE SIDEWALK
- PROPOSED ASPHALT PAVEMENT REPLACEMENT

1"=5'-0" 5 2.5 0 5'

REV	ISSUED FOR	DATE	BY
1	BID SET	08-06-18	G.B.

PROJECT ENGINEER:
DESIGNED BY: F.A.M.
DRAWN BY: G.K.
CHECKED BY:
IF THIS BAR DOES NOT MEASURE 1" THEN DRAWING IS NOT TO FULL SCALE 0 1/2" 1"

GEORGE A. BROWN LICENSE No 56076 STATE OF FLORIDA PROFESSIONAL ENGINEER 8/20/18

GEORGE A. BROWN, PE NO. 56076

Hazen

HAZEN AND SAWYER
4000 HOLLYWOOD BOULEVARD, SUITE 750N
HOLLYWOOD, FLORIDA 33021
CERTIFICATE OF AUTHORIZATION NO. : 2771

CITY OF HALLANDALE BEACH

WATER TREATMENT PLANT
HIGH SERVICE PUMP REPLACEMENT

Hallandale Beach

TEMPORARY HIGH SERVICE PUMP STATION

DATE: AUGUST 2018
HAZEN NO.: 40621-000
CONTRACT NO.: 1
DRAWING NUMBER: C-05

File: C:\Users\AJOHN-PW\Desktop\C-05 Saved By: AJOHNSON Save Date: 2018/08/08 8:13 AM
PLOT DATE: 2018/08/08 9:27:44 AM BY: AJOHNSON

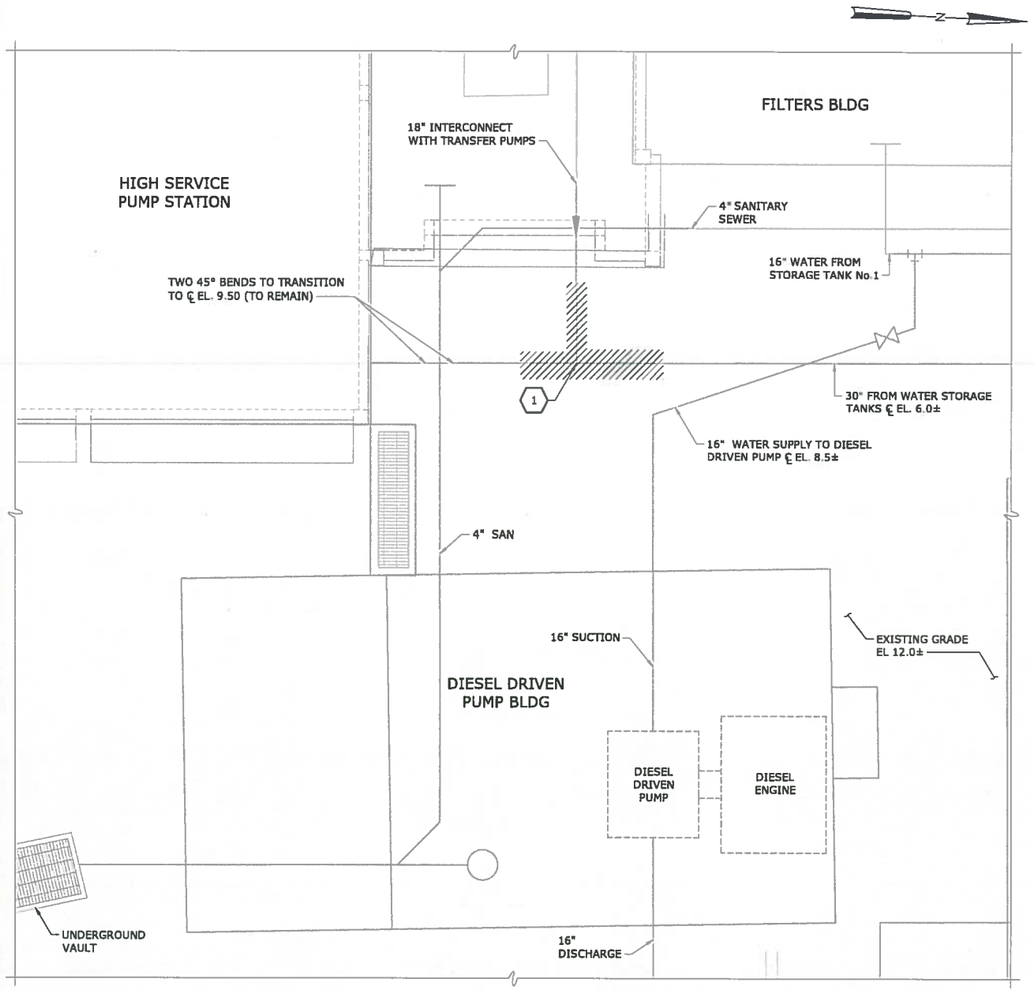

EXISTING PLAN

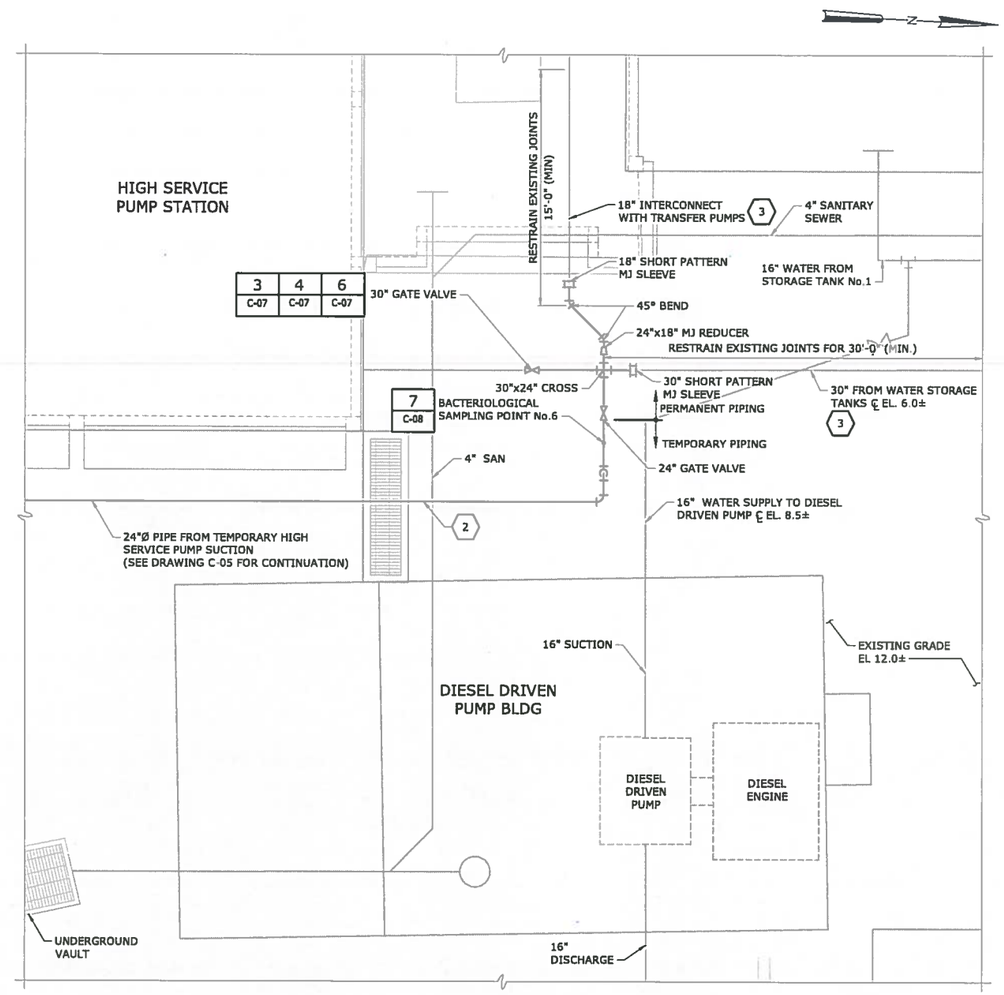

PROPOSED PLAN

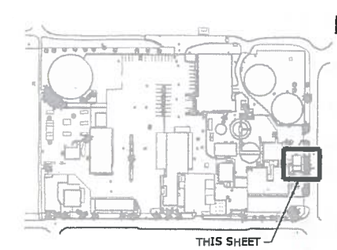

KEY MAP

SUCTION PIPING MODIFICATIONS

DETAIL 1 / C-05
1" = 5'-0"

KEYED NOTES:

1. REMOVE EXISTING 30" PIPING AS REQUIRED TO CONSTRUCT THE PROPOSED PIPING MODIFICATIONS.
2. INSTALL AN AIR AND VACUUM VALVE AT THE TOP OF THE 24" PIPE FOR AIR VENTING DURING PIPE FILLING AND DRAINAGE.
3. EXPOSE ALL JOINTS ON EXISTING PIPING. CONFIRM JOINT TYPE. RESTRAIN ALL EXISTING JOINTS WITH SPLIT RING TYPE RESTRAINING DEVICES SUCH AS MEGALUG 1100HD BY EBAA IRON FOR PUSH-ON JOINTS OR MEGALUG 1100SD BY EBAA IRON FOR MECHANICAL JOINTS.

NOTES:

1. RESTRAIN ALL JOINTS.
2. THIS DRAWING IS BASED UPON VARIOUS RECORD DRAWINGS. THE AVAILABLE RECORD DRAWINGS PROVIDE LIMITED DATA. NO INFORMATION IS AVAILABLE ON EXISTING UNDERGROUND ELECTRICAL, CONTROL WIRING, IRRIGATION OR PLUMBING IN THE AREA SHOWN. THE CONTRACTOR SHALL FIELD VERIFY LOCATIONS AND ELEVATION OF YARD PIPING AT ALL PROPOSED TIE-INS, CROSSINGS, REMOVAL AND/OR LINE STOPS TO ALLOW FOR PROPER ALIGNMENTS AND/OR CLEARANCES BETWEEN EXISTING AND PROPOSED IMPROVEMENTS.
3. CONSTRUCTION OF THE PROPOSED SUCTION PIPING MODIFICATIONS TO CONNECT THE PROPOSED TEMPORARY HIGH SERVICE PUMPS TO THE EXISTING 30-INCH PIPE FROM THE WATER STORAGE TANKS SHALL BE PERFORMED DURING A SHORT-TERM SHUTDOWN OF THE EXISTING HIGH SERVICE PUMP STATION. DURING THE SHORT-TERM SHUTDOWN OF THE EXISTING HIGH SERVICE PUMP STATION, THE CITY WILL OPERATE THE DIESEL DRIVEN PUMP.
4. REFERENCE THE SECTION TITLED "MAINTENANCE OF UTILITY OPERATIONS DURING CONSTRUCTION" FOR CONSTRUCTION SEQUENCING.

LEGEND:

- EXISTING
- PROPOSED
- TO BE REMOVED

1"=5'-0" 5 2.5 0 5'

REV	ISSUED FOR	DATE	BY
1	BID SET	08-06-18	G.B.

PROJECT ENGINEER:
DESIGNED BY: F.A.M.
DRAWN BY: G.K.
CHECKED BY:

IF THIS BAR DOES NOT MEASURE 1" THEN DRAWING IS NOT TO FULL SCALE 0 1/2" 1"

GEORGE A. BROWN LICENSE No 56076 STATE OF FLORIDA PROFESSIONAL ENGINEER
8/20/18
GEORGE A. BROWN, P.E. No. 56076

Hazen
HAZEN AND SAWYER
4000 HOLLYWOOD BOULEVARD, SUITE 750N
HOLLYWOOD, FLORIDA 33021
CERTIFICATE OF AUTHORIZATION NO. : 2771

CITY OF HALLANDALE BEACH

WATER TREATMENT PLANT
HIGH SERVICE PUMP REPLACEMENT

Hallandale Beach

SUCTION PIPING MODIFICATIONS

DATE: AUGUST 2018
HAZEN NO.: 40621-000
CONTRACT NO.: 1
DRAWING NUMBER: C-06

File: C:\WSK\VAZZH-FP\N34627A\C-06 Saved By: JOHNSON Save Date: 2018/08/08 9:14 AM
PLOT DATE: 2018/08/08 9:27:57 AM BY: JOHNSON

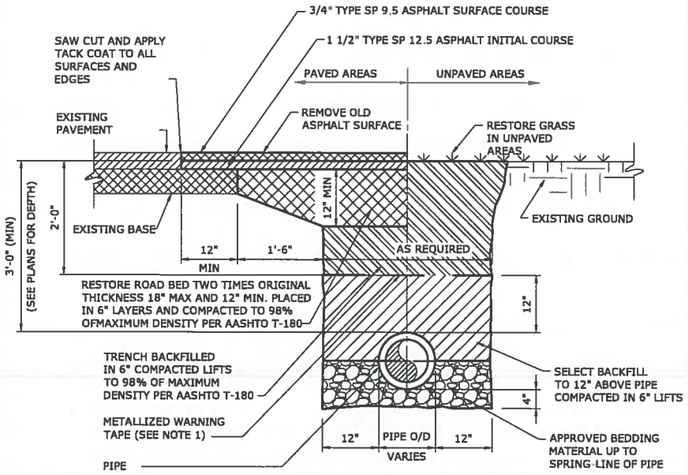

NOTES:

1. METALLIZED WARNING TAPES SHALL BE INSTALLED 24" BELOW FINISH GRADE CENTERED ABOVE THE PIPE.
2. SELECTED BACKFILL MATERIAL SHALL BE FREE OF STONES LARGER THAN 3/4" DIA.
3. REPLACE ALL LANE MARKINGS AND REFLECTIVE MARKERS.
4. DEPTH OF PIPE VARIES. SEE PIPING PLANS FOR PROPOSED DEPTHS. MINIMUM DEPTH OF COVER SHALL BE 36 INCHES.

TYPICAL TRENCH AND PAVEMENT REPLACEMENT

DETAIL 1 — NTS -

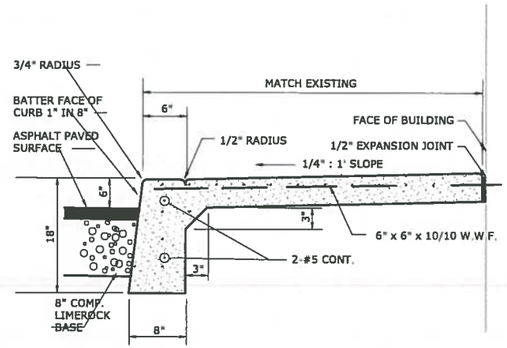

NOTE: THE ELEVATION OF THE FLOOR SURFACES ON BOTH SIDES OF A DOOR SHALL BE EQUAL AND THE ELEVATION SHALL BE MAINTAINED ON BOTH SIDES OF THE DOOR FOR A DISTANCE AT LEAST EQUAL TO THE WIDTH OF THE WIDEST LEAF.

CURB AND SIDEWALK ALONG ROAD

DETAIL 2 — NTS -

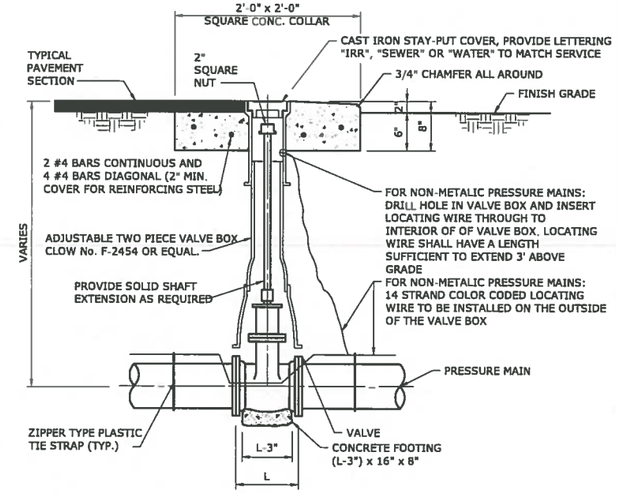

VALVE BOX

DETAIL 3 — NTS -

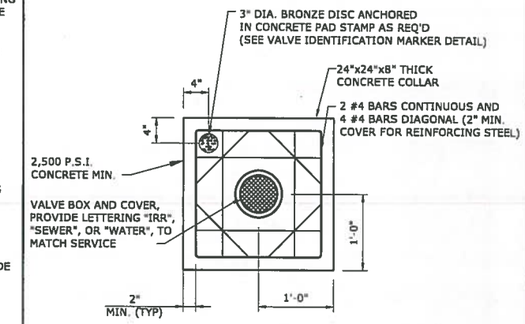

VALVE BOX COLLAR

DETAIL 4 — NTS -

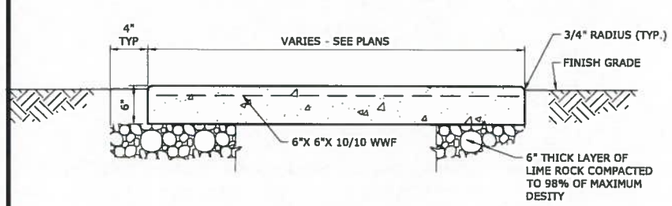

CONCRETE WALKWAY REINFORCING

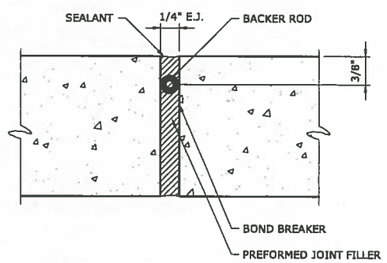

CONCRETE WALKWAY EXPANSION JOINT

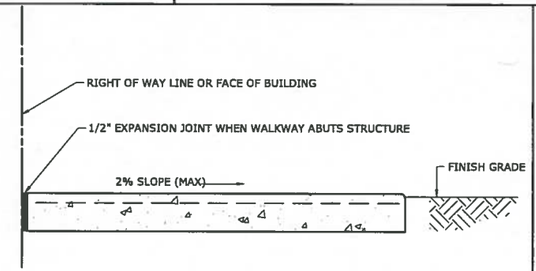

SLOPE

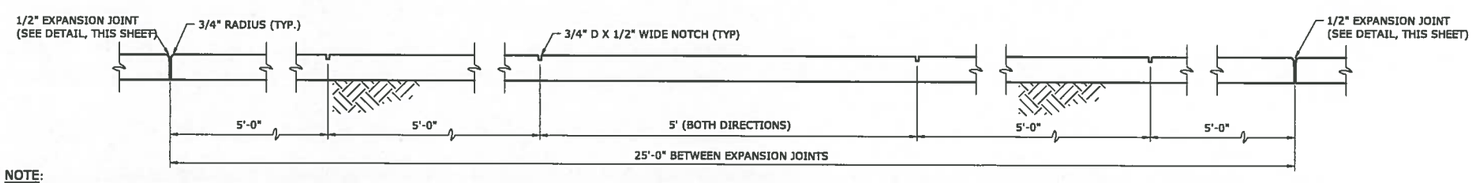

NOTE:

1. THE CONTRACTOR SHALL CONSTRUCT AN EXPANSION JOINT AT SPACING SHOWN ABOVE, AT THE END OF DAYS WORK, POINTS OF CURVATURE, AND AT ADJOINING STRUCTURES.

SECTION

CONCRETE SIDEWALK

DETAIL 5 — NTS -

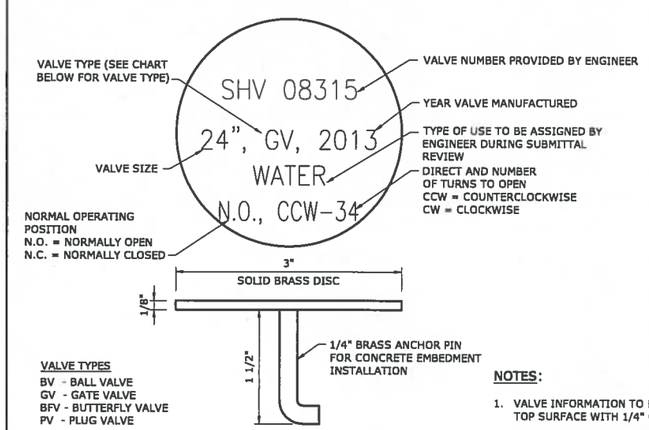

VALVE TYPES
BV - BALL VALVE
GV - GATE VALVE
BFV - BUTTERFLY VALVE
PV - PLUG VALVE

NOTES:

1. VALVE INFORMATION TO BE ENGRAVED INTO TOP SURFACE WITH 1/4" CAPITAL LETTERS.
2. ENTIRE MARKER TO BE COATED WITH CLEAR EPOXY TO PREVENT TARNISHING.
3. MARKERS SHALL BE MANUFACTURED BY WAGCO MARKERS, OR APPROVED EQUAL.

VALVE IDENTIFICATION MARKER

DETAIL 6 — NTS -

REV	ISSUED FOR	DATE	BY
1	BID SET	08-06-18	G.B.

PROJECT ENGINEER:
DESIGNED BY: G.A.B.
DRAWN BY: G.B.
CHECKED BY:
IF THIS BAR DOES NOT MEASURE 1" THEN DRAWING IS NOT TO FULL SCALE — 0 1/2" 1"

GEORGE A. BROWN LICENSE No. 56076 STATE OF FLORIDA PROFESSIONAL ENGINEER — 8/20/18

GEORGE A. BROWN, P.E. No. 56076

Hazen

HAZEN AND SAWYER
4000 HOLLYWOOD BOULEVARD, SUITE 750N
HOLLYWOOD, FLORIDA 33021
CERTIFICATE OF AUTHORIZATION NO. : 2771

CITY OF HALLANDALE BEACH

WATER TREATMENT PLANT
HIGH SERVICE PUMP REPLACEMENT

Hallandale Beach

CIVIL DETAILS - SHEET 1

DATE: AUGUST 2018
HAZEN NO.: 40621-000
CONTRACT NO.: 1
DRAWING NUMBER: C-07

File: C:\Jobs\FAUDI-FWP\06544271\C-07 Saved By: JJOHNSON Save Date: 2018/08/06 8:18 AM
PLOT DATE: 2018/08/06 8:28:01 AM BY: JJOHNSON

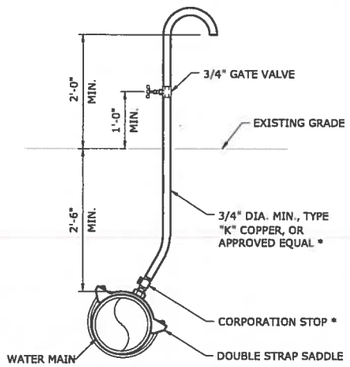

* NOTE: AFTER TESTS REMOVE 3/4" TUBING AND INSTALL PLUG ON CORPORATION STOP.

TEMPORARY BATERIOLOGICAL SAMPLE POINT

DETAIL 7
NTS -

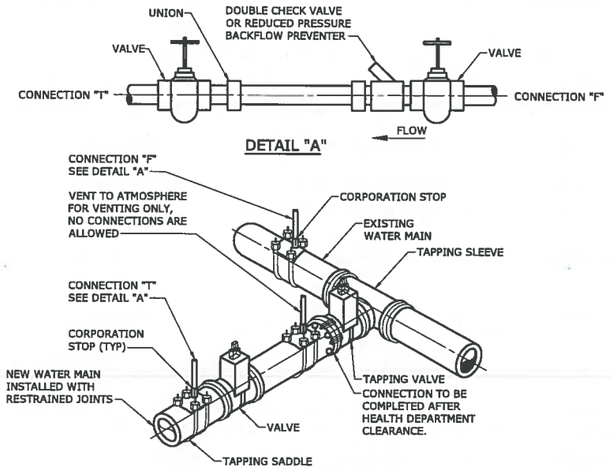

NOTES:

1. REMOVE TEMPORARY CONNECTION AT CORPORATION STOP ON EXISTING MAIN AFTER FILLING AND FLUSHING OF NEW LINE.
2. DO NOT REMOVE TEMPORARY CONNECTION AT CORPORATION STOP ON NEW MAIN UNTIL ALL TESTING HAS BEEN CLEARED BY HEALTH DEPARTMENT.
3. CLOSE CORPORATION STOPS AND PLUG/CAP WITH BRASS FITTINGS AFTER SAMPLING IS COMPLETED.

FILLING AND FLUSHING CONNECTION

DETAIL 8
NTS -

1/32"=1'-0" 32 16 0 32'

REV	ISSUED FOR	DATE	BY
1	BID SET	08-06-18	G.B.

PROJECT ENGINEER:
DESIGNED BY: F.A.M.
DRAWN BY: G.K.
CHECKED BY:
IF THIS BAR DOES NOT MEASURE 1" THEN DRAWING IS NOT TO FULL SCALE 0 1/2" 1"

GEORGE A. BROWN LICENSE No 56076 STATE OF FLORIDA PROFESSIONAL ENGINEER 8/20/18

GEORGE A. BROWN, PE No. 56076

Hazen
HAZEN AND SAWYER
4000 HOLLYWOOD BOULEVARD, SUITE 750N
HOLLYWOOD, FLORIDA 33021
CERTIFICATE OF AUTHORIZATION NO. : 2771

CITY OF HALLANDALE BEACH

WATER TREATMENT PLANT
HIGH SERVICE PUMP REPLACEMENT

Hallandale Beach

CIVIL DETAILS - SHEET 2

DATE: AUGUST 2018
HAZEN NO.: 40621-000
CONTRACT NO.: 1
DRAWING NUMBER: C-08

File: C:\JOBS\HAZEN-FM\D40621\C-08 Saved By: JJOHNSON Save Date: 2018/08/08 8:17 AM
PLOT DATE: 2018/08/08 8:26:03 AM BY: JJOHNSON

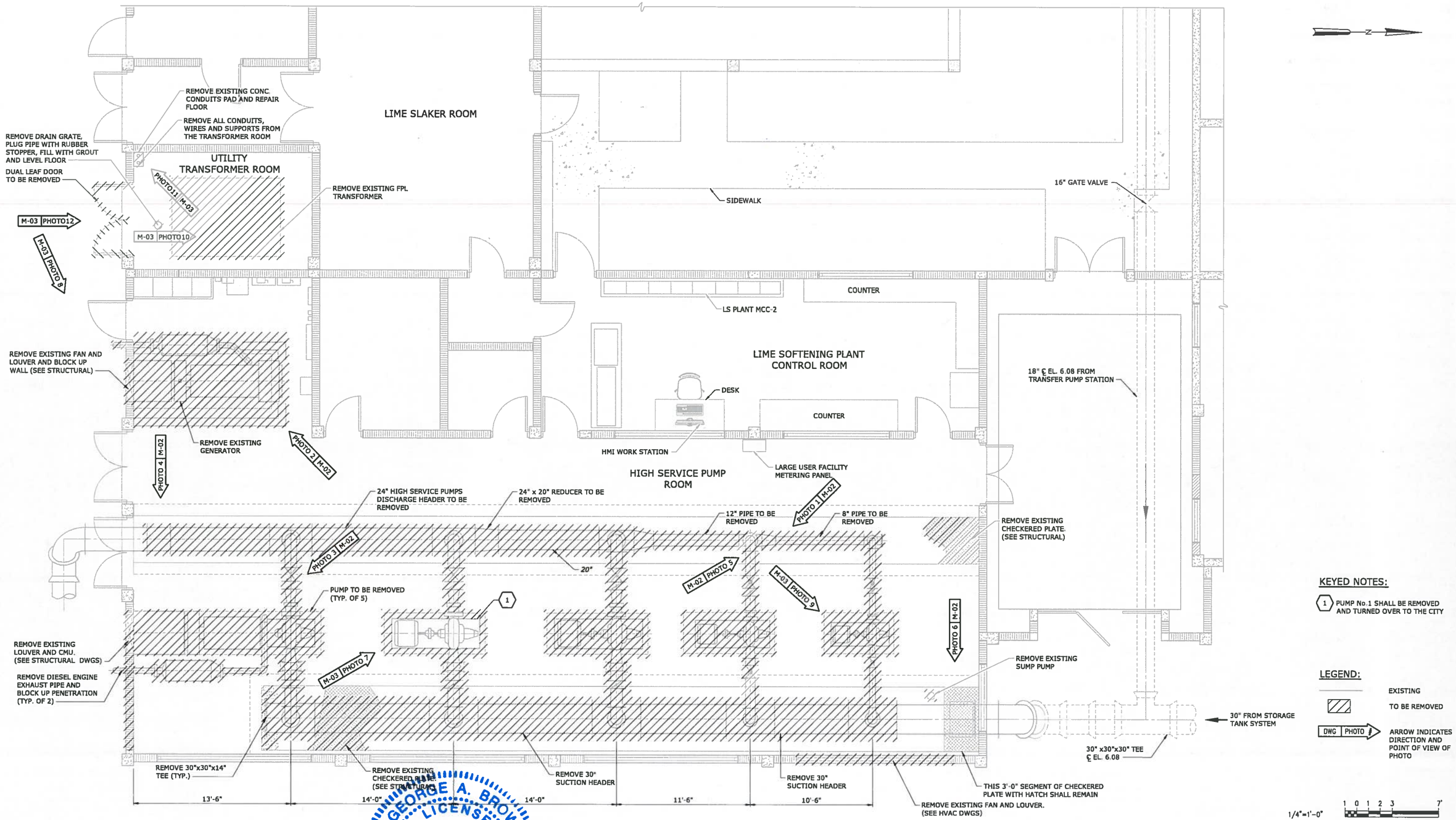

REV	ISSUED FOR	DATE	BY
1	BID SET	08-06-18	G.B.

PROJECT ENGINEER:
DESIGNED BY: G.A.B.
DRAWN BY: G.B.
CHECKED BY:
IF THIS BAR DOES NOT MEASURE 1" THEN DRAWING IS NOT TO FULL SCALE 0 1/2" 1"

GEORGE A. BROWN LICENSE No 56076 8/20/18 STATE OF FLORIDA PROFESSIONAL ENGINEER

GEORGE A. BROWN, PE NO. 56076

Hazen

HAZEN AND SAWYER
4000 HOLLYWOOD BOULEVARD, SUITE 750N
HOLLYWOOD, FLORIDA 33021
CERTIFICATE OF AUTHORIZATION NO. : 2771

CITY OF HALLANDALE BEACH

WATER TREATMENT PLANT
HIGH SERVICE PUMP REPLACEMENT

Hallandale Beach

HIGH SERVICE PUMPS
DEMOLITION PLAN

DATE: AUGUST 2018
HAZEN NO.: 40621-000
CONTRACT NO.: 1
DRAWING NUMBER: M-01

File: C:\USERS\AZZH-PW\DESKTOP\V-01 Saved By: LJOHNSON Save Date: 2018/08/08 8:18 AM
PLOT DATE: 2018/08/08 8:36:28 AM BY: LJOHNSON

REMOVE ALL PUMPS, PIPING, VALVES, PIPES SUPPORTS, MOTORS, CONDUIT, WIRE AND CONCRETE PUMP BASES (TYPICAL FOR ALL PUMPS)

REMOVE CHECKERED PLATE

PUMP ROOM - DEMO PHOTO 1

NTS

REMOVE GENERATOR (SEE ELECTRICAL)

PUMP ROOM - DEMO PHOTO 2

NTS

REMOVE EXISTING DIESEL ENGINE, PUMP, PIPING, VALVES, SUPPORTS, PUMP PAD, EXHAUST FAN, FAN LOUVER, DIESEL ENGINE LOUVER, EXHAUST PIPING, MUFFLER AND SUPPORTS

REMOVE CONCRETE PIPE SUPPORT (TYP. FOR ALL PUMPS)

PUMP ROOM - DEMO PHOTO 3

NTS

REMOVE FLOW AND PRESSURE TRANSMITTER

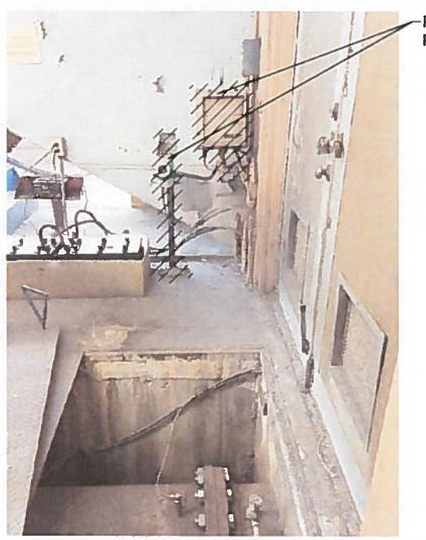

PUMP ROOM - DEMO PHOTO 4

NTS

REMOVE PIPING, AND PIPE SUPPORTS WITHIN SUCTION AND DISCHARGE TRENCHES UNLESS SHOWN TO REMAIN ON PLANS

PUMP ROOM - DEMO PHOTO 5

NTS

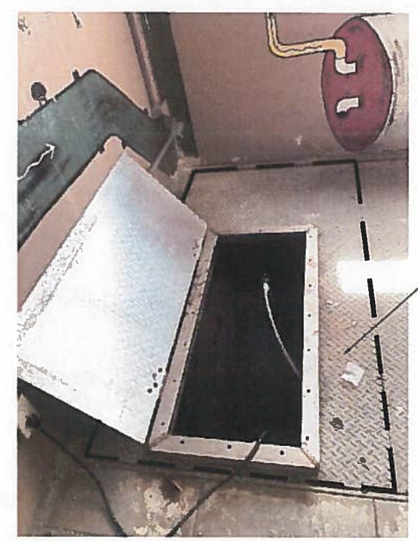

THIS 3'-0" SEGMENT OF CHECKERED PLATE WITH HATCH SHALL REMAIN

PUMP ROOM - DEMO PHOTO 6

NTS

LEGEND:

TO BE REMOVED

REV	ISSUED FOR	DATE	BY
1	BID SET	08-06-18	G.B.

PROJECT ENGINEER:

DESIGNED BY: F.A.M.

DRAWN BY: G.K.

CHECKED BY:

IF THIS BAR DOES NOT MEASURE 1" THEN DRAWING IS NOT TO FULL SCALE 0 1/2" 1"

GEORGE A. BROWN, PE NO. 58076

GEORGE A. BROWN LICENSE No 58076 8/20/18 STATE OF FLORIDA PROFESSIONAL ENGINEER

Hazen

HAZEN AND SAWYER
4000 HOLLYWOOD BOULEVARD, SUITE 750N
HOLLYWOOD, FLORIDA 33021
CERTIFICATE OF AUTHORIZATION NO. : 2771

CITY OF HALLANDALE BEACH

WATER TREATMENT PLANT
HIGH SERVICE PUMP REPLACEMENT

Hallandale Beach

HIGH SERVICE PUMPS
DEMOLITION PHOTOS
SHEET 1

DATE: AUGUST 2018

HAZEN NO.: 40621-000

CONTRACT NO.: 1

DRAWING NUMBER: M-02

File: C:\Users\AJOHNSON\AppData\Local\Temp\AcPublish_42285\M-02 Saved By: AJOHNSON Save Date: 2018/08/08 8:18 AM
PLOT DATE: 2018/08/08 8:36:33 AM BY: AJOHNSON

PUMP ROOM - DEMO PHOTO 7
NTS

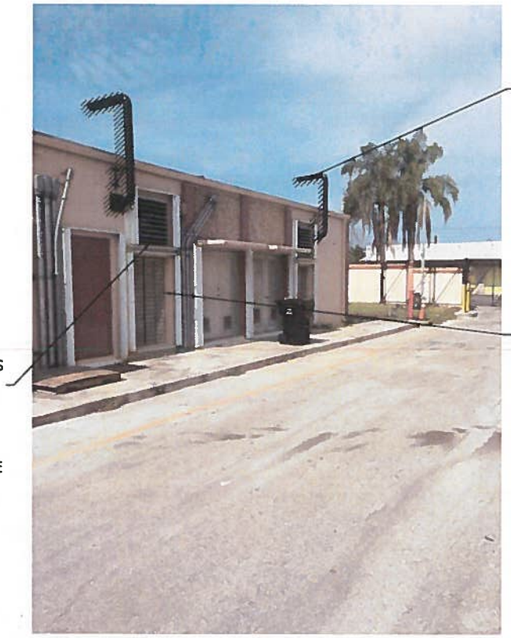

PUMP ROOM - DEMO PHOTO 8
NTS

PUMP ROOM - DEMO PHOTO 9
NTS

TRANSFORMER ROOM - DEMO PHOTO 10
NTS

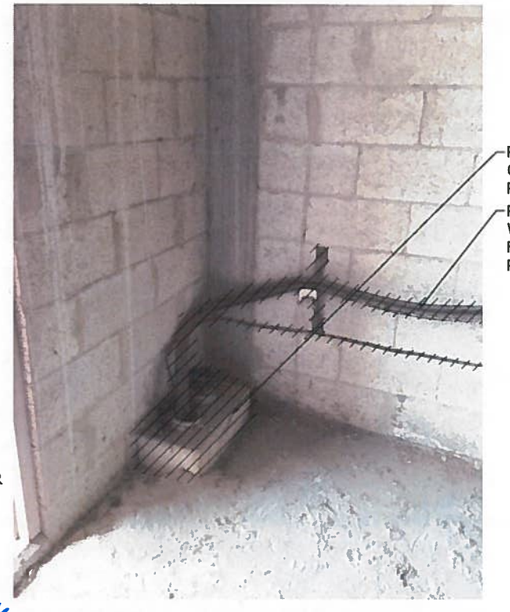

TRANSFORMER ROOM - DEMO PHOTO 11
NTS

TRANSFORMER ROOM - DEMO PHOTO 12
NTS

LEGEND:

TO BE REMOVED

REV	ISSUED FOR	DATE	BY
1	BID SET	08-06-18	G.B.

PROJECT ENGINEER:
DESIGNED BY: F.A.M.
DRAWN BY: G.K.
CHECKED BY:
IF THIS BAR DOES NOT MEASURE 1" THEN DRAWING IS NOT TO FULL SCALE 0 1/2" 1"

GEORGE A. BROWN, P.E. NO. 56076

GEORGE A. BROWN LICENSE NO 56076 8/20/18 STATE OF FLORIDA PROFESSIONAL ENGINEER

Hazen
HAZEN AND SAWYER
4000 HOLLYWOOD BOULEVARD, SUITE 750N
HOLLYWOOD, FLORIDA 33021
CERTIFICATE OF AUTHORIZATION NO. : 2771

CITY OF HALLANDALE BEACH

WATER TREATMENT PLANT
HIGH SERVICE PUMP REPLACEMENT

Hallandale Beach

HIGH SERVICE PUMPS
DEMOLITION PHOTOS
SHEET 2

DATE: AUGUST 2018
HAZEN NO.: 40621-000
CONTRACT NO.: 1
DRAWING NUMBER: M-03

File: C:\WSTV\AZ2h-FP\U41482891\U-03 Saved By: JADAVSON Save Date: 2018/08/06 9:20 AM
PLOT DATE: 2018/08/06 9:36:38 AM BY: JADAVSON

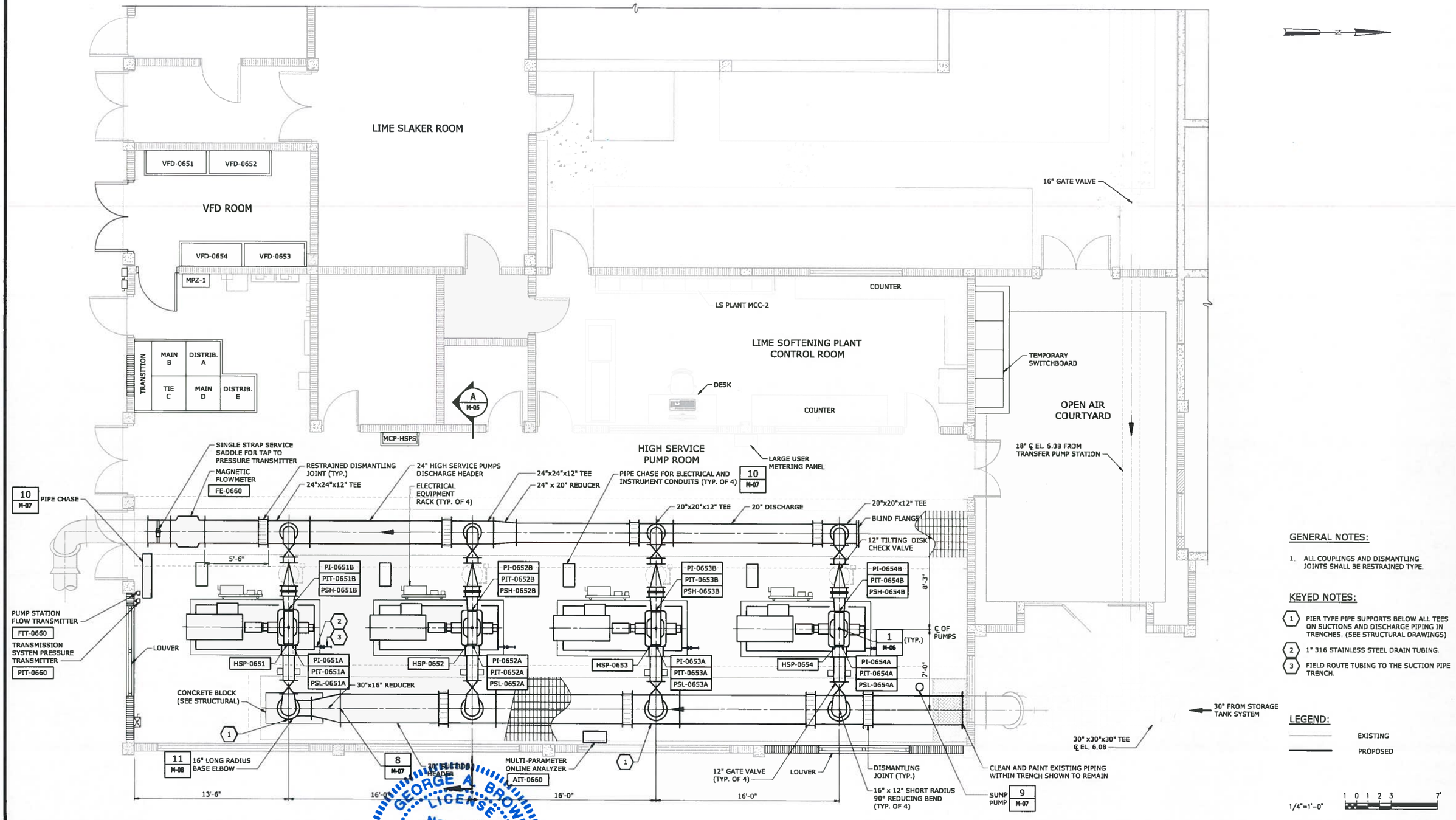

REV	ISSUED FOR	DATE	BY
1	BID SET	08-06-18	G.B.

PROJECT ENGINEER:
DESIGNED BY: G.A.B.
DRAWN BY: G.B.
CHECKED BY:
IF THIS BAR DOES NOT MEASURE 1" THEN DRAWING IS NOT TO FULL SCALE 0 1/2" 1"

GEORGE A. BROWN LICENSE No. 56076 STATE OF FLORIDA PROFESSIONAL ENGINEER 8/20/18

GEORGE A. BROWN, PE NO. 56076

Hazen

HAZEN AND SAWYER
4000 HOLLYWOOD BOULEVARD, SUITE 750N
HOLLYWOOD, FLORIDA 33021
CERTIFICATE OF AUTHORIZATION NO. : 2771

CITY OF HALLANDALE BEACH

WATER TREATMENT PLANT
HIGH SERVICE PUMP REPLACEMENT

Hallandale Beach

HIGH SERVICE PUMPS
PROPOSED PLAN

DATE: AUGUST 2018
HAZEN NO.: 40621-000
CONTRACT NO.: 1
DRAWING NUMBER: M-04

File: C:\JOBS\HAZEN-PW\DAFS4238\M-04 Saved By: JOHNSON Save Date: 2018/08/20 8:36 AM
PLOT DATE: 2018/08/20 8:36:02 AM BY: JOHNSON

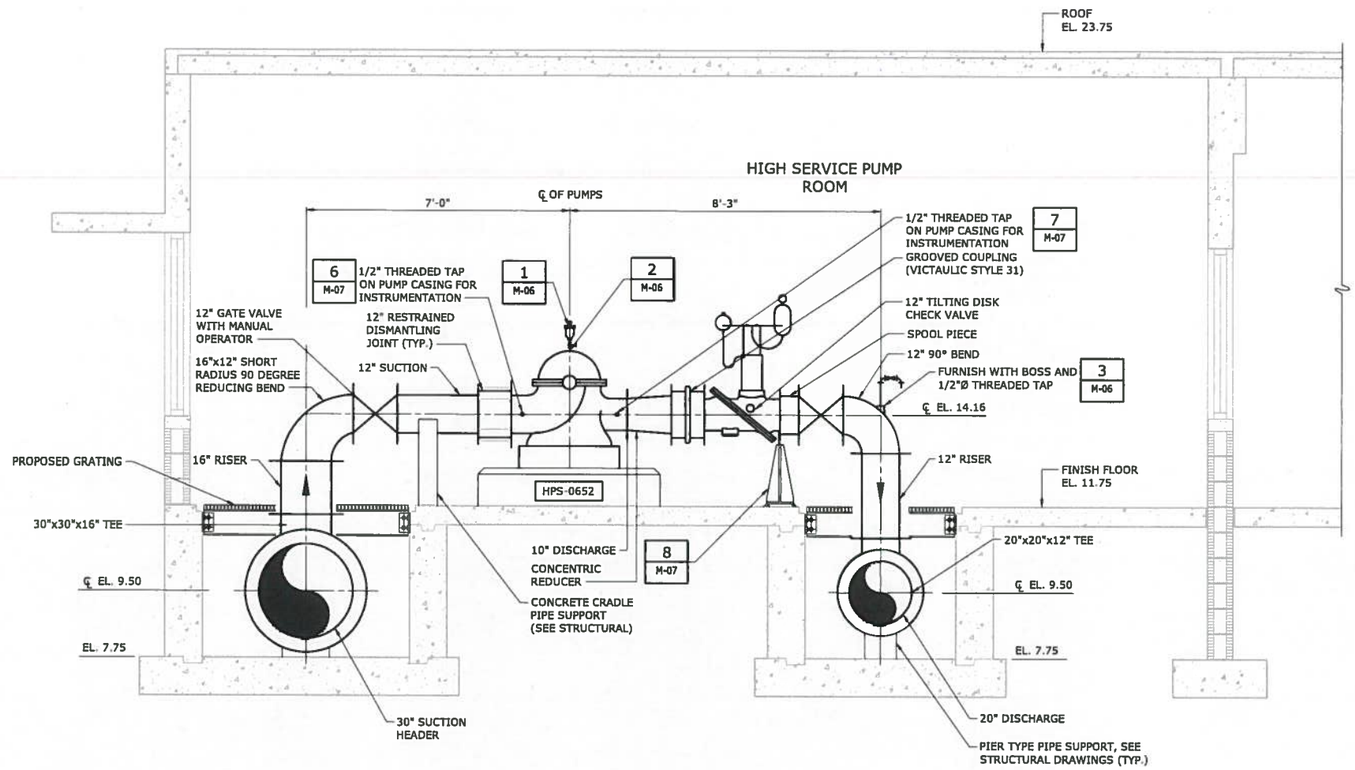

SECTION A M-04
1/2" = 1'-0"

LEGEND:

EXISTING

PROPOSED

1/2"=1'-0" 12" 0 1 3'

REV	ISSUED FOR	DATE	BY
1	BID SET	08-06-18	G.B.

PROJECT ENGINEER:

DESIGNED BY: F.A.M.

DRAWN BY: G.K.

CHECKED BY:

IF THIS BAR DOES NOT MEASURE 1" THEN DRAWING IS NOT TO FULL SCALE 0 1/2" 1"

GEORGE A. BROWN, P.E. NO. 58070

GEORGE A. BROWN LICENSE No 58070 8/20/18 STATE OF FLORIDA PROFESSIONAL ENGINEER

Hazen

HAZEN AND SAWYER
4000 HOLLYWOOD BOULEVARD, SUITE 750N
HOLLYWOOD, FLORIDA 33021
CERTIFICATE OF AUTHORIZATION NO. : 2771

CITY OF HALLANDALE BEACH

WATER TREATMENT PLANT
HIGH SERVICE PUMP REPLACEMENT

Hallandale Beach

HIGH SERVICE PUMPS SECTION

DATE: AUGUST 2018
HAZEN NO.: 40621-000
CONTRACT NO.: 1
DRAWING NUMBER: M-05

BID SET

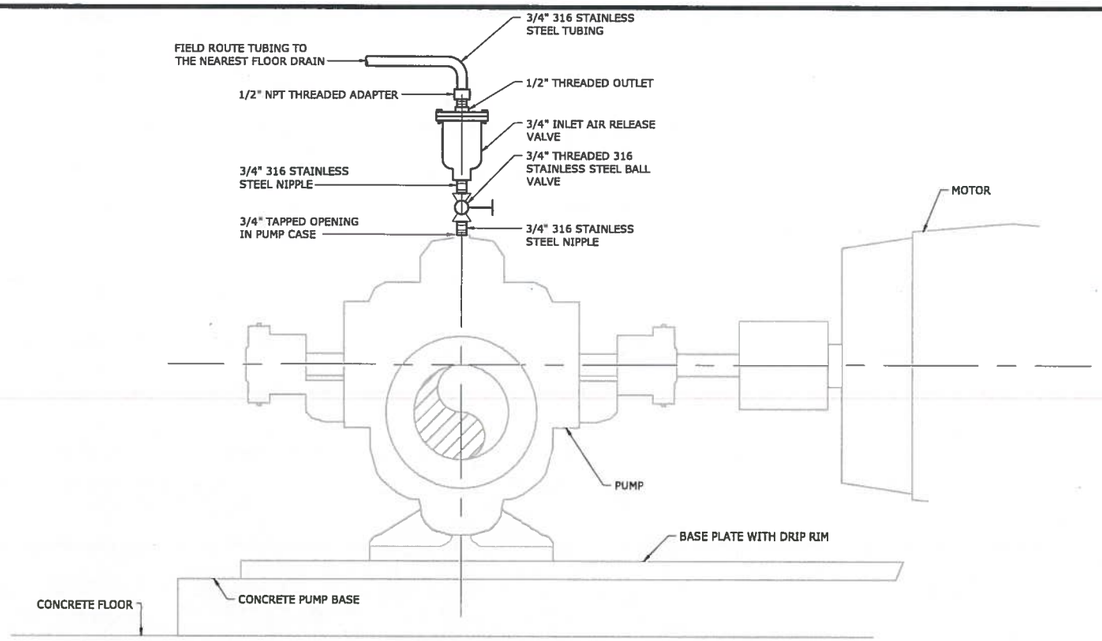

AIR RELEASE VALVE

DETAIL 1
NTS -

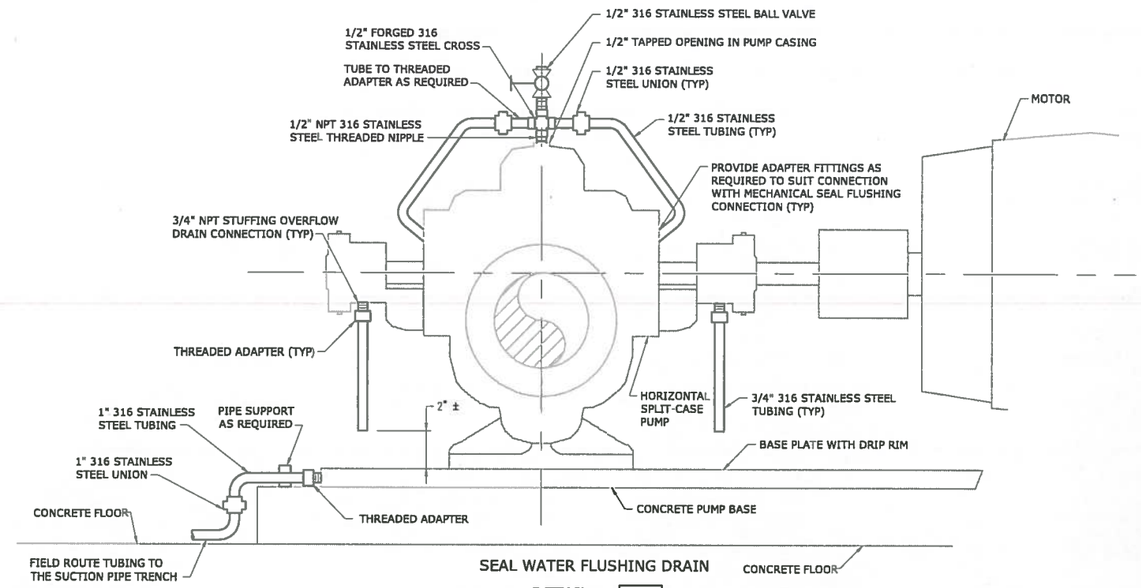

SEAL WATER FLUSHING DRAIN

DETAIL 2
NTS -

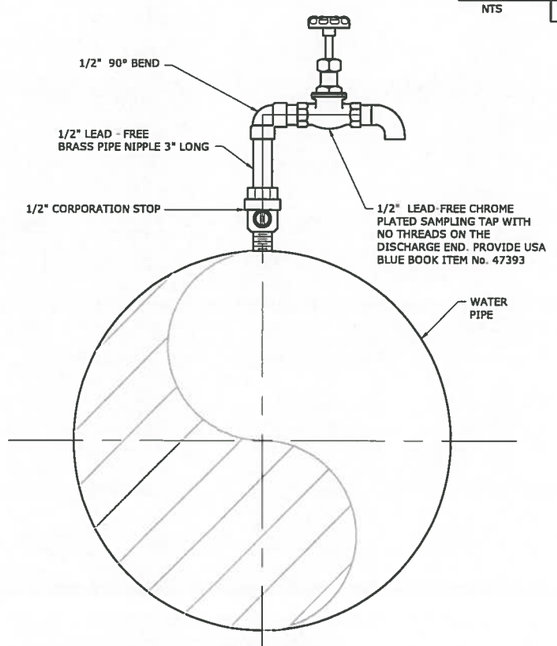

SAMPLE TAP

DETAIL 3
NTS -

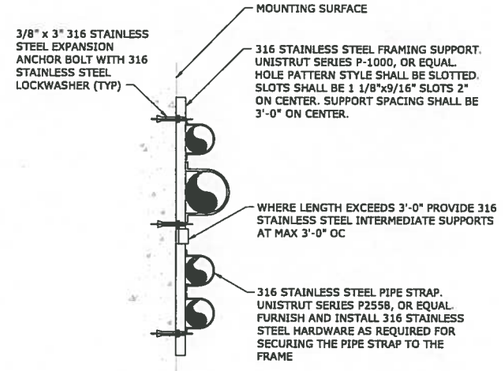

NOTES:

1. THIS DETAIL IS APPLICABLE TO VERTICAL AND HORIZONTAL SURFACES.
2. THIS DETAIL IS APPLICABLE FOR PIPE SIZES 3-INCH DIAMETER AND SMALLER.

FLUSH MOUNTED PIPE SUPPORT

DETAIL 4
NTS -

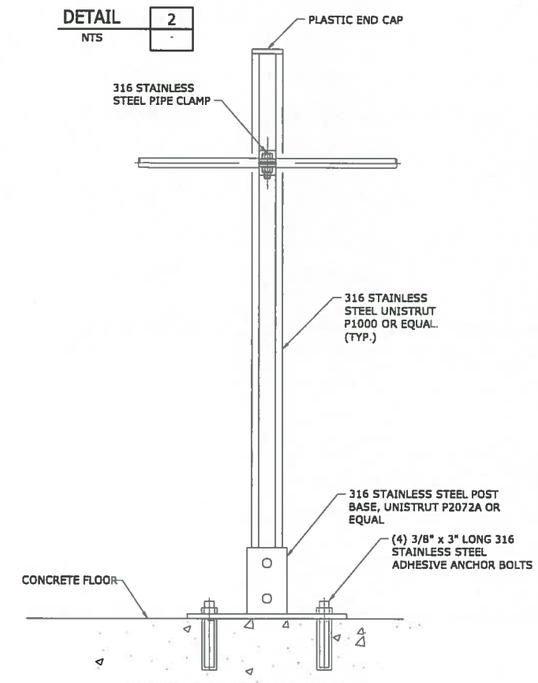

UNISTRUT POST - PIPE SUPPORT

DETAIL 5
NTS -

REV	ISSUED FOR	DATE	BY
1	BID SET	08-06-18	G.B.

PROJECT ENGINEER:
DESIGNED BY: G.A.B.
DRAWN BY: G.B.
CHECKED BY:
IF THIS BAR DOES NOT MEASURE 1" THEN DRAWING IS NOT TO FULL SCALE 0 1/2" 1"

GEORGE A. BROWN LICENSE No 58078 STATE OF FLORIDA PROFESSIONAL ENGINEER 8/20/18

GEORGE A. BROWN, P.E. No. 58078

Hazen

HAZEN AND SAWYER
4000 HOLLYWOOD BOULEVARD, SUITE 750N
HOLLYWOOD, FLORIDA 33021
CERTIFICATE OF AUTHORIZATION NO. : 2771

CITY OF HALLANDALE BEACH

WATER TREATMENT PLANT
HIGH SERVICE PUMP REPLACEMENT

Hallandale Beach

MECHANICAL DETAILS
SHEET 1

DATE: AUGUST 2018
HAZEN NO.: 40621-000
CONTRACT NO.: 1
DRAWING NUMBER: M-06

File: C:\JOBS\VALEN-FW\U54628R\U-08 Saved By: JOHNSON Save Date: 2018/08/08 9:22 AM
PLOT DATE: 2018/08/08 9:27:01 AM BY: JOHNSON

BID SET

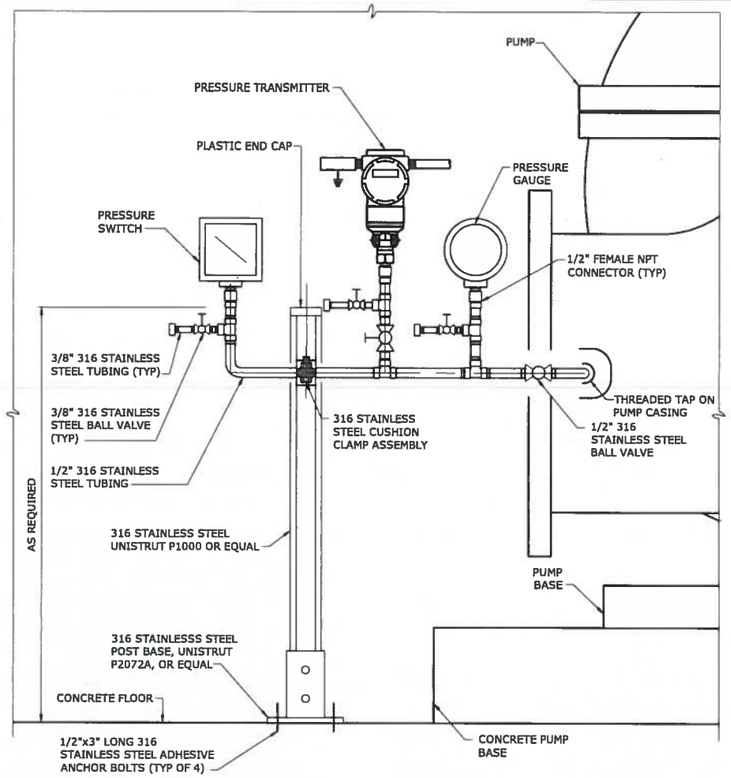

PUMP SUCTION

DETAIL 6 / NTS / M-04

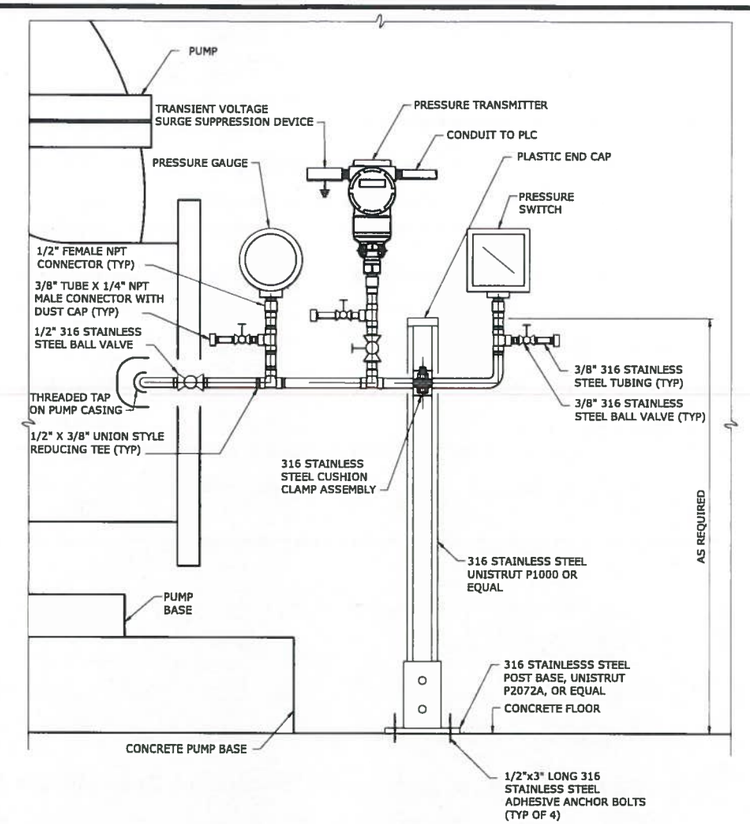

PUMP DISCHARGE

DETAIL 7 / NTS / M-04

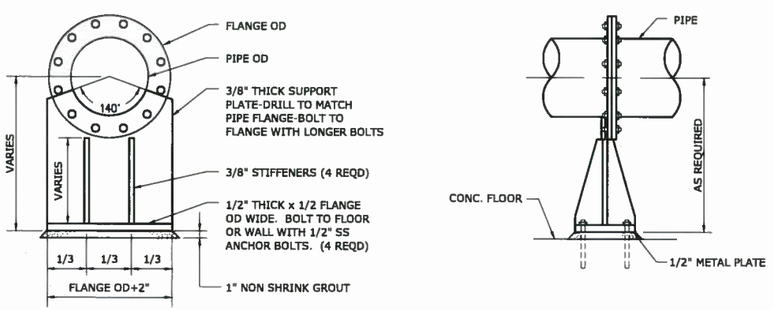

PAINTED STEEL PIPE SUPPORT AT FLANGE - ELEVATION VIEW

DETAIL 8 / NTS / -

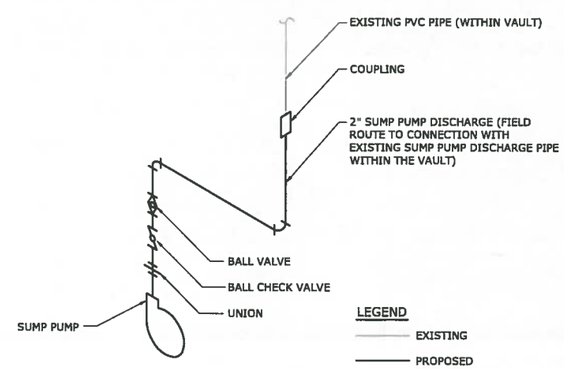

SUMP PUMP SCHEMATIC

DETAIL 9 / NTS / M-04

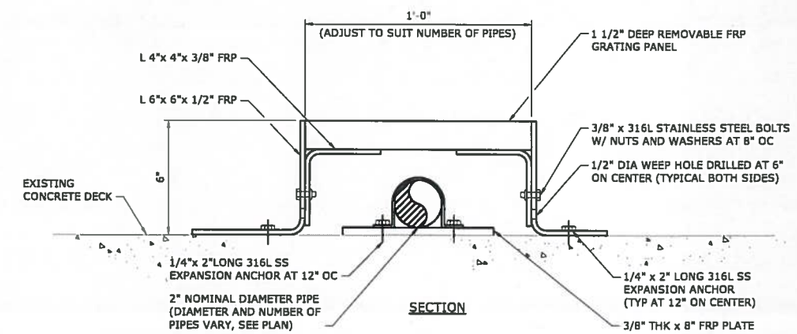

PIPE CHASE

DETAIL 10 / NTS / M-04

REV	ISSUED FOR	DATE	BY
1	BID SET	08-06-18	G.B.

PROJECT ENGINEER:
DESIGNED BY: G.A.B.
DRAWN BY: G.B.
CHECKED BY:

IF THIS BAR DOES NOT MEASURE 1" THEN DRAWING IS NOT TO FULL SCALE (0 1/2" 1")

GEORGE A. BROWN LICENSE No. 56076 STATE OF FLORIDA PROFESSIONAL ENGINEER 8/20/18

GEORGE A. BROWN, PE NO. 56076

Hazen
HAZEN AND SAWYER
4000 HOLLYWOOD BOULEVARD, SUITE 750N
HOLLYWOOD, FLORIDA 33021
CERTIFICATE OF AUTHORIZATION NO. : 2771

CITY OF HALLANDALE BEACH

WATER TREATMENT PLANT
HIGH SERVICE PUMP REPLACEMENT

Hallandale Beach

MECHANICAL DETAILS
SHEET 2

DATE:	AUGUST 2018
HAZEN NO.:	40621-000
CONTRACT NO.:	1
DRAWING NUMBER:	M-07

File: C:\Users\AZZH-PW\AppData\Local\Temp\AcPublish_4428\M-07 Saved By: LADAVSON Save Date: 2018/08/06 8:23 AM
PLOT DATE: 2018/08/06 8:37:05 AM BY: LADAVSON

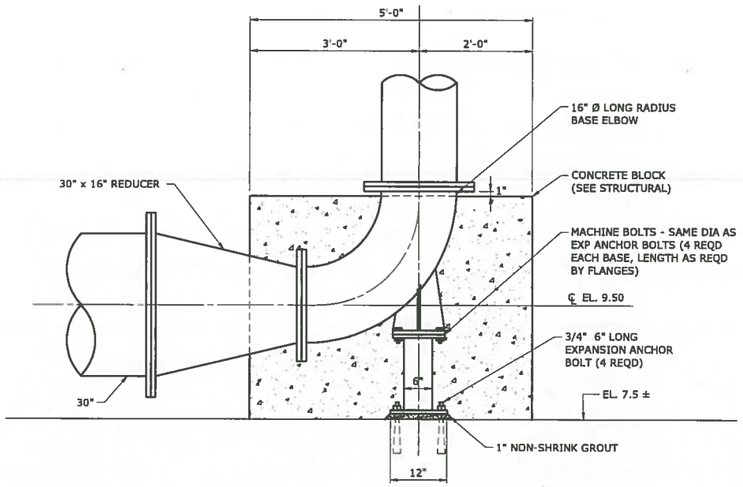

BASE ELBOW

DETAIL 11
3/4" = 1'-0" M-08

3/4"=1'-0"

6" 0 1 2'

REV	ISSUED FOR	DATE	BY
1	BID SET	08-06-18	G.B.

PROJECT ENGINEER:
DESIGNED BY: F.A.M.
DRAWN BY: G.K.
CHECKED BY:

IF THIS BAR DOES NOT MEASURE 1" THEN DRAWING IS NOT TO FULL SCALE 0 1/2" 1"

GEORGE A. BROWN LICENSE No. 56076 STATE OF FLORIDA PROFESSIONAL ENGINEER
8/20/18

GEORGE A. BROWN, P.E. No. 56076

Hazen

HAZEN AND SAWYER
4000 HOLLYWOOD BOULEVARD, SUITE 750N
HOLLYWOOD, FLORIDA 33021
CERTIFICATE OF AUTHORIZATION NO. : 2771

CITY OF HALLANDALE BEACH

WATER TREATMENT PLANT
HIGH SERVICE PUMP REPLACEMENT

Hallandale Beach

MECHANICAL DETAILS
SHEET 3

DATE: AUGUST 2018
HAZEN NO.: 40621-000
CONTRACT NO.: 1
DRAWING NUMBER: M-08

File: C:\WSF\HAZEN-PW\DMS40295\M-08 Saved By: LAURA M Save Date: 2018/08/08 10:34 AM
PLOT DATE: 2018/08/08 3:41:53 PM BY: JOHNSON

BID SET

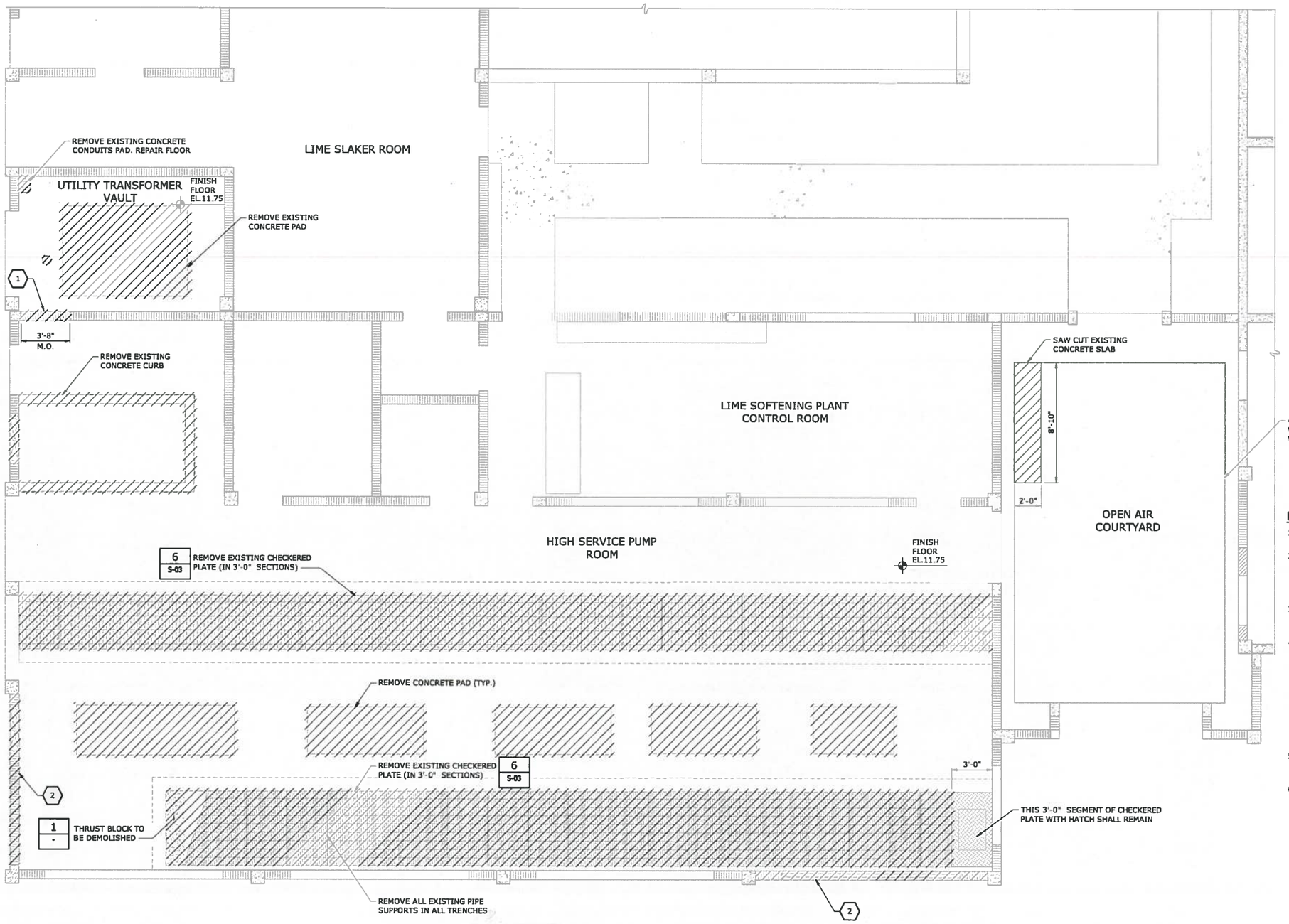

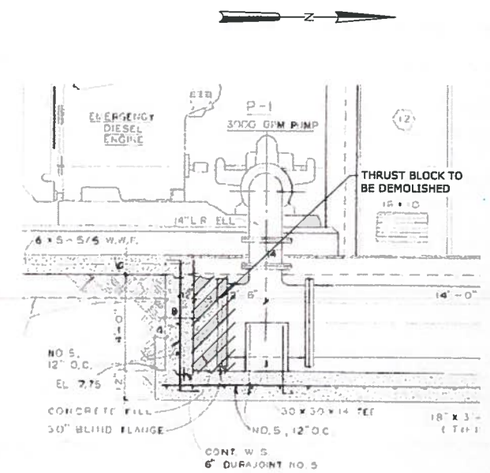

THRUST BLOCK

DETAIL	1
NTS	-

4" THICK CONCRETE PATIO WITH 6x6-10/10 WELDED WIRE FABRIC

DEMOLITION NOTES:

1. FOR DEMOLITION REQUIREMENTS, REFER TO SPECIFICATION 01540 - DEMOLITION AND REMOVAL OF EXISTING STRUCTURES AND EQUIPMENT.
2. CONCRETE DEMOLITION WITHIN STRUCTURES BEING MODIFIED SHALL BE SELECTIVE DEMOLITION BY CORE DRILLING OR SAW CUTTING AND CAREFUL REMOVAL OF CONCRETE SHOWN TO BE REMOVED. NO OVER CUTTING OF AREAS TO BE DEMOLISHED SHALL BE PERMITTED. CONTRACTOR SHALL CORE DRILL CORNERS OF OPENING PRIOR TO SAW CUTTING. EXPLOSIVES AND VIBRATORY HAMMERS SHALL NOT BE USED FOR DEMOLITION WORK.
3. UNLESS ANCHORING DEVICES AND/OR REINFORCEMENT IS NOTED TO REMAIN FOLLOWING DEMOLITION, REMOVE AND/OR BURN BACK ANCHORS AND REINFORCEMENT STEEL 1/2" MIN BELOW SURFACE. VOIDS CREATED SHALL BE FILLED WITH EPOXY RESIN BINDER.
4. WHERE DRAWINGS INDICATE A CONCRETE EQUIPMENT PAD TO BE DEMOLISHED, THE FLOOR SLAB SURFACE SHALL BE REPAIRED AS APPROVED BY ENGINEER. FOLLOWING SELECT DEMOLITION AND REMOVAL OF THE EQUIPMENT PAD REMOVAL THE REPAIR SHALL BE:
   - A. SAWCUT THE FLOOR AROUND THE EQUIPMENT PAD PERIMETER TO A DEPTH OF 1/4".
   - B. SCARIFY AND REMOVE SLAB CONCRETE WITHIN THE PERIMETER TO A NOMINAL 1/4" DEPTH CLEAN AND REMOVE ALL CONCRETE LAITANCE.
   - C. RESURFACE THE AREA BY APPLYING A POLYMER MODIFIED OR SILICA FUME ENHANCED CEMENTITIOUS REPAIR MORTAR, APPROVED BY THE ENGINEER, FOLLOWING THE MANUFACTURER'S SURFACE PREPARATION AND APPLICATION RECOMMENDATIONS. LEVEL AND FINISH THE SURFACE TO MATCH THE FLOOR SLAB SURROUNDING AREA.
5. CONCRETE SURFACES LEFT EXPOSED FOLLOWING DEMOLITION SHALL BE SEALED WITH EPOXY RESIN COATING SUCH AS "SIKAGARD" BY SIKA CORPORATION, "DURACOTE 240" BY TAMMS INDUSTRIES, OR APPROVED EQUAL.
6. REFER TO THE SPECIFICATION SECTION TITLED "MAINTENANCE OF UTILITY OPERATIONS DURING CONSTRUCTION" FOR SEQUENCE OF CONSTRUCTION REQUIREMENTS.

LEGEND:

EXISTING

TO BE REMOVED

KEYED NOTES

1. REMOVE CMU FOR DOOR. PRIOR TO CMU REMOVAL, CONTRACTOR SHALL VERIFY THAT EQUIPMENT PROPOSED FOR VFD ROOM CAN BE PLACED WITHOUT OSBTRUCTING DOOR OPENING.
2. REMOVE CMU FOR LOUVER.

1/4"=1'-0" 1 0 1 2 3 7'

REV	ISSUED FOR	DATE	BY
1	BID SET	08-06-18	G.B.

PROJECT ENGINEER:
DESIGNED BY: G.A.B.
DRAWN BY: G.B.
CHECKED BY:

IF THIS BAR DOES NOT MEASURE 1" THEN DRAWING IS NOT TO FULL SCALE 0 1/2" 1"

SHAJAN JOYKUTTY, P.E.
No. 43323

Hazen
HAZEN AND SAWYER
4000 HOLLYWOOD BOULEVARD, SUITE 750N
HOLLYWOOD, FLORIDA 33021
CERTIFICATE OF AUTHORIZATION NO. : 2771

CITY OF HALLANDALE BEACH

WATER TREATMENT PLANT
HIGH SERVICE PUMP REPLACEMENT

Hallandale Beach

HIGH SERVICE PUMPS
DEMOLITION PLAN

DATE:	AUGUST 2018
HAZEN NO.:	40621-000
CONTRACT NO.:	1
DRAWING NUMBER:	S-01

File: C:\BWS\HAZEN-PW\D0545302\S-01 Saved By: JOHNSON Save Date: 2018/08/10 8:43 AM
PLOT DATE: 2018/08/10 8:38:47 AM BY: JOHNSON

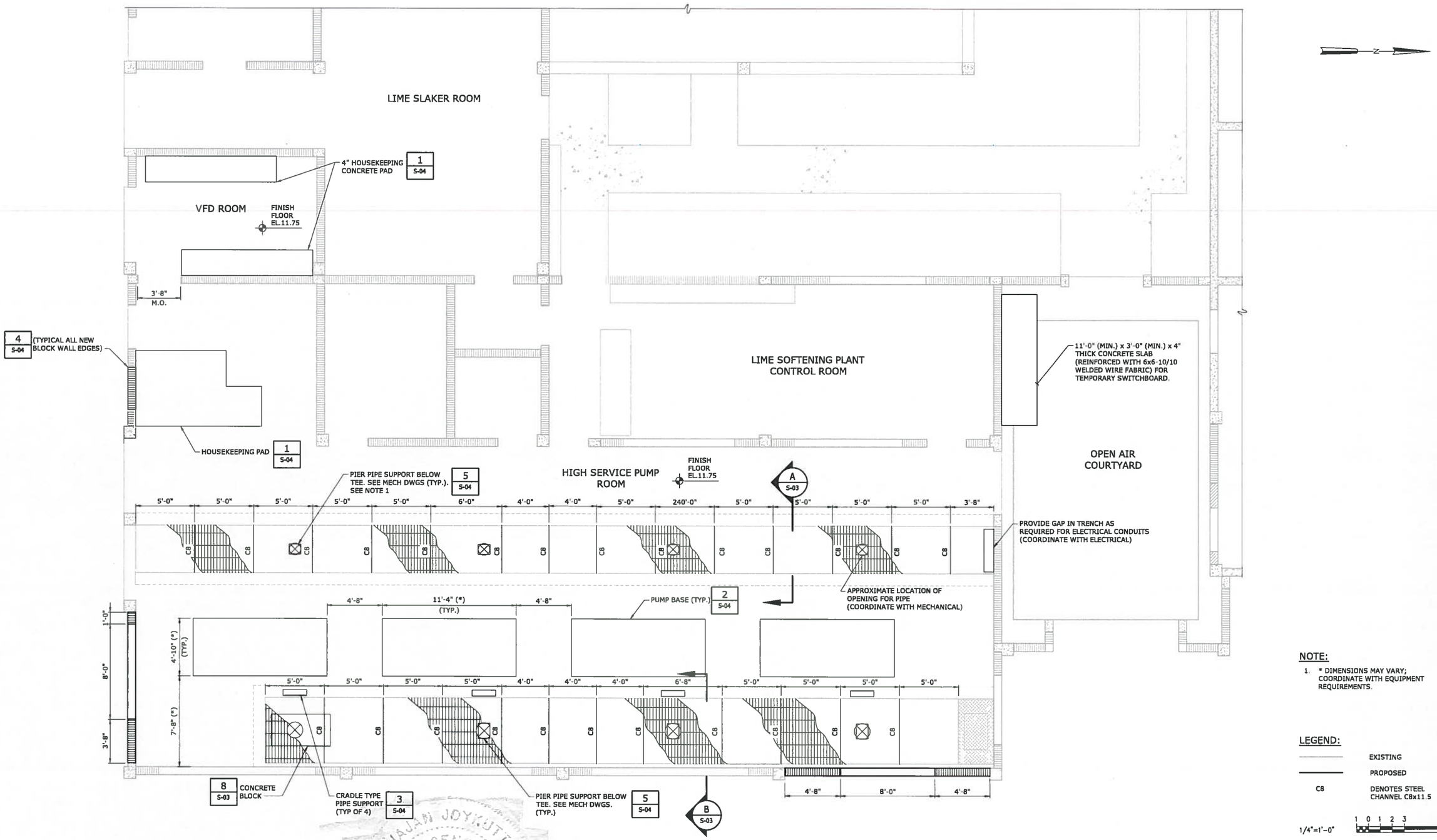

NOTE:

1. * DIMENSIONS MAY VARY; COORDINATE WITH EQUIPMENT REQUIREMENTS.

LEGEND:

	EXISTING
	PROPOSED
C8	DENOTES STEEL CHANNEL C8x11.5

1/4"=1'-0" 1 0 1 2 3 7'

REV	ISSUED FOR	DATE	BY
1	BID SET	08-06-18	G.B.

PROJECT ENGINEER:
DESIGNED BY: G.A.B.
DRAWN BY: G.B.
CHECKED BY:
IF THIS BAR DOES NOT MEASURE 1" THEN DRAWING IS NOT TO FULL SCALE 0 1/2" 1"

SHAJAN JOYKUTTY, P.E.
No. 43323

8/20/18

Hazen
HAZEN AND SAWYER
4000 HOLLYWOOD BOULEVARD, SUITE 750N
HOLLYWOOD, FLORIDA 33021
CERTIFICATE OF AUTHORIZATION NO. : 2771

CITY OF HALLANDALE BEACH

WATER TREATMENT PLANT
HIGH SERVICE PUMP REPLACEMENT

Hallandale Beach

HIGH SERVICE PUMPS
PROPOSED PLAN

DATE: AUGUST 2018
HAZEN NO.: 40621-000
CONTRACT NO.: 1
DRAWING NUMBER: S-02

File: C:\BWS\HAZEN-PW\40621\S-02 Saved By: LADYKEN Save Date: 2018/08/08 8:28 AM
PLOT DATE: 2018/08/08 8:29:58 AM BY: LADYKEN

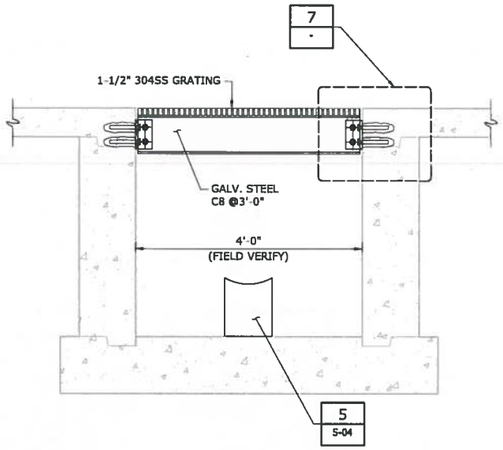

SECTION A / S-02
NTS

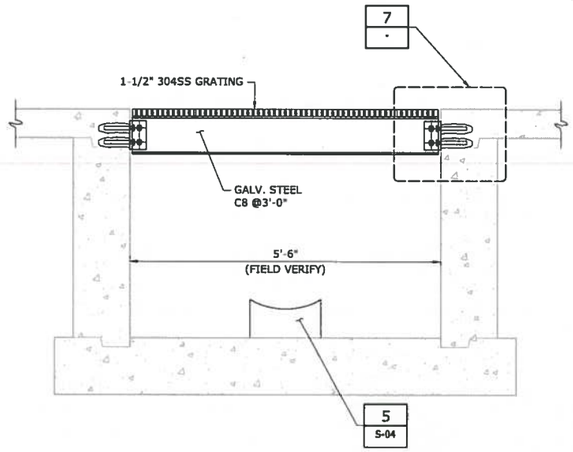

SECTION B / S-02
NTS

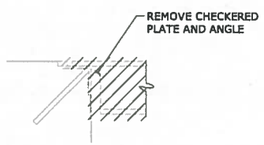

DEMOLITION

DETAIL 6
NTS

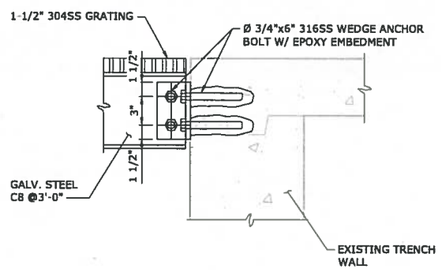

DETAIL 7
NTS

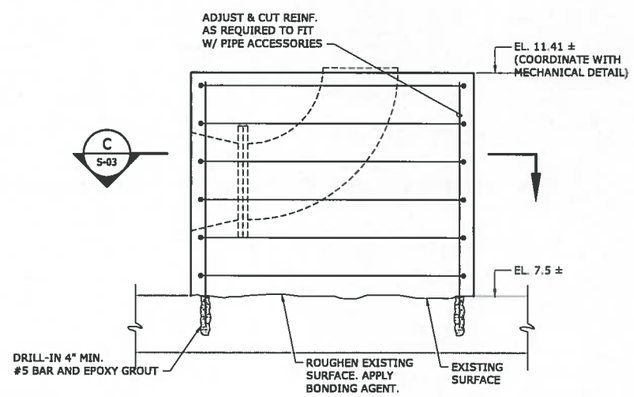

DETAIL 8 / S-03
3/4" = 1'-0"

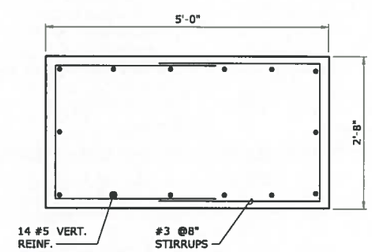

SECTION C
3/4" = 1'-0"

LEGEND

- EXISTING
- PROPOSED
- TO BE REMOVE
- C8 DENOTES STEEL CHANNEL C8x11.5

REV	ISSUED FOR	DATE	BY
1	BID SET	08-06-18	G.B.

PROJECT ENGINEER:
DESIGNED BY: F.A.M.
DRAWN BY: G.K.
CHECKED BY:
IF THIS BAR DOES NOT MEASURE 1" THEN DRAWING IS NOT TO FULL SCALE 0 1/2" 1"

SHAJAN JOYKUTTY, P.E.
No. 43323
8/20/18

Hazen
HAZEN AND SAWYER
4000 HOLLYWOOD BOULEVARD, SUITE 750N
HOLLYWOOD, FLORIDA 33021
CERTIFICATE OF AUTHORIZATION NO. : 2771

CITY OF HALLANDALE BEACH

WATER TREATMENT PLANT
HIGH SERVICE PUMP REPLACEMENT

Hallandale Beach

SECTIONS AND DETAILS

DATE: AUGUST 2018
HAZEN NO.: 40621-000
CONTRACT NO.: 1
DRAWING NUMBER: S-03

File: C:\WSY\HAZEN-FP\P\40621\S-03 Saved By: JOHNSON Save Date: 2018/08/06 8:29 AM
PLOT DATE: 2018/08/06 8:48:03 AM BY: JOHNSON

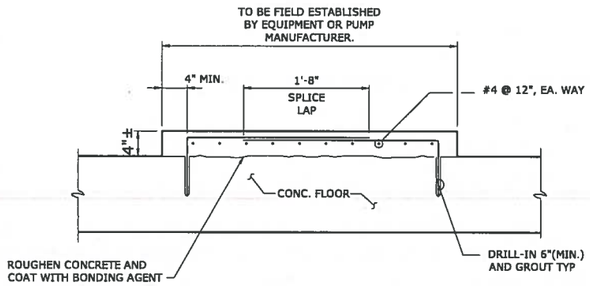

SECTION

HOUSE KEEPING PAD DETAIL

DETAIL 1
NTS -

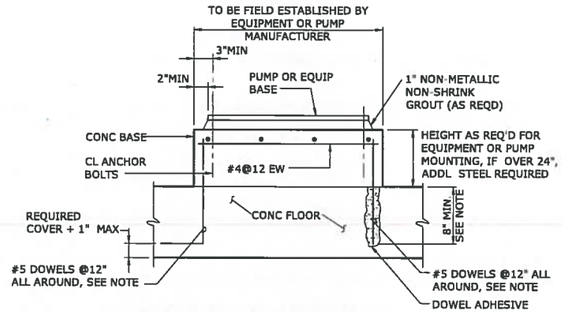

NOTE: DOWELS MAY BE CAST IN WITH 90° HOOK OR ANCHORED WITH DOWEL ADHESIVE AT CONTRACTORS OPTION. WHERE FLOOR IS 8" THICK OR LESS, USE #4 DOWELS EMBEDDED TO WITHIN 2" OF BOTTOM OF FLOOR SLAB.

TYP PUMP OR EQUIP BASE

DETAIL 2
NTS -

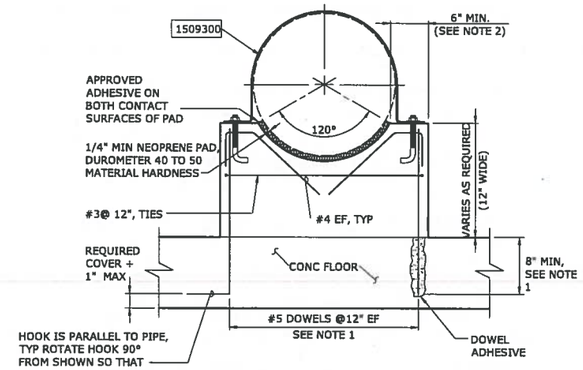

NOTES:
1. DOWELS MAY BE CAST IN WITH 90° HOOK OR ANCHORED WITH DOWEL ADHESIVE AT CONTRACTORS OPTION. WHERE FLOOR IS 8" THICK OR LESS, USE #4 DOWELS EMBEDDED TO WITHIN 2" OF BOTTOM OF FLOOR SLAB.
2. COORDINATE SUPPORT WIDTH WITH PIPE STRAP ANCHORAGE REQUIREMENTS. PROVODE 6" MINIMUM, FROM CENTER OF PIPE STRAP ANCHOR ROD TO EDGE CONCRETE.

CRADLE PIPE SUPPORT

DETAIL 3
NTS -

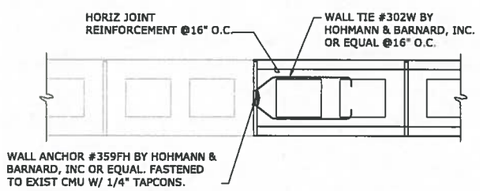

NOTE:

TYPICAL FOR ALL NEW BLOCK WALL EDGES.

DETAIL 4
NTS -

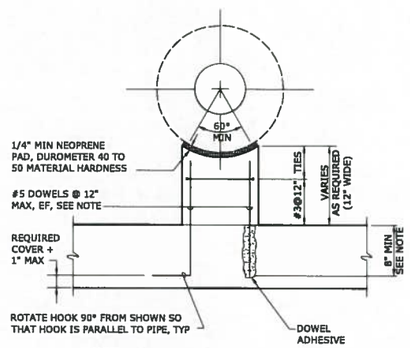

NOTE:
1 DOWELS MAY BE CAST IN WITH 90° HOOK OR ANCHORED WITH DOWEL ADHESIVE AT CONTRACTORS OPTION. WHERE FLOOR IS 8" THICK OR LESS, USE #4 DOWELS EMBEDDED TO WITHIN 2" OF BOTTOM OF FLOOR SLAB.

PIER
PIPE SUPPORT

DETAIL 5
NTS -

LEGEND

- EXISTING
- PROPOSED
- TO BE REMOVE
- C8 DENOTES STEEL CHANNEL C8x11.5

REV	ISSUED FOR	DATE	BY
1	BID SET	08-06-18	G.B.

PROJECT ENGINEER:
DESIGNED BY: F.A.M.
DRAWN BY: G.K.
CHECKED BY:
IF THIS BAR DOES NOT MEASURE 1" THEN DRAWING IS NOT TO FULL SCALE 0 1/2" 1"

SHAJAN JOYKUTTY, P.E.
No. 43323
8/20/18

Hazen
HAZEN AND SAWYER
4000 HOLLYWOOD BOULEVARD, SUITE 750N
HOLLYWOOD, FLORIDA 33021
CERTIFICATE OF AUTHORIZATION NO. : 2771

CITY OF HALLANDALE BEACH

WATER TREATMENT PLANT
HIGH SERVICE PUMP REPLACEMENT

Hallandale Beach

DETAILS

DATE: AUGUST 2018
HAZEN NO.: 40621-000
CONTRACT NO.: 1
DRAWING NUMBER: S-04

File: C:\WSTV\A22D-PW\P16540322\S-04 Saved By: JOHNSON Save Date: 2018/08/08 9:30 AM
PLOT DATE: 2018/08/08 9:40:07 AM BY: JOHNSON

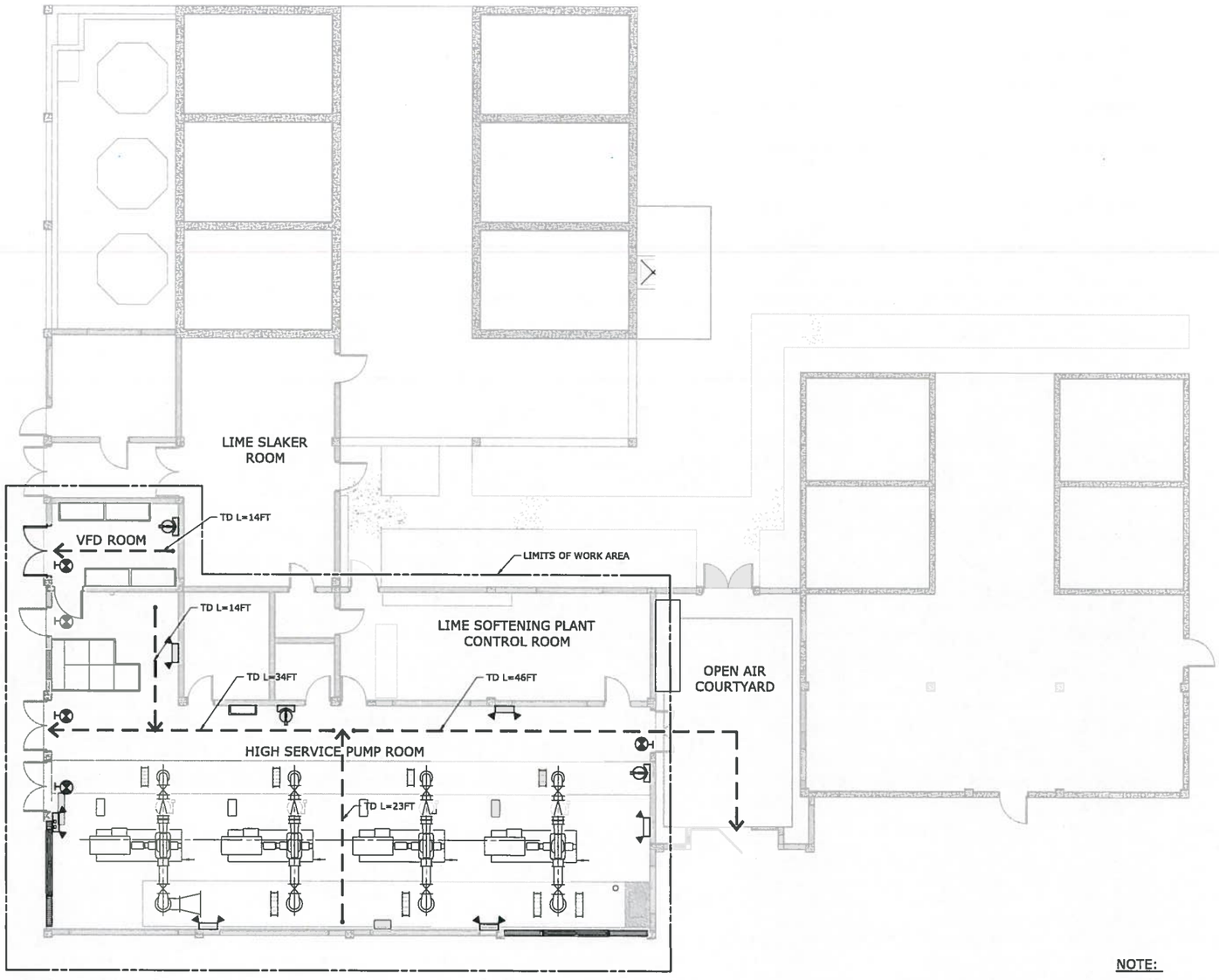

LIFE SAFETY LEGEND

ENTRANCE/EXIT	EMERGENCY LIGHT FIXTURE	EXIT SIGN
DIRECTION OF TRAVEL	NON-FIRE RATED CMU WALL	EXIT SIGN WALLMOUNT
DEAD END CORRIDOR	FIRE AUDIBLE & VISUAL ALARM	FIRE ALARM PULL STATION WALL MOUNTED 48" A.F.F
FIRE EXTINGUISHER		

NOTE:

LIFE SAFETY ANALYSIS IS ONLY FOR WORK AREA.

LEGEND:

EXISTING

PROPOSED

1/4"=1'-0" 1 0 1 2 3 7'

LIFE SAFETY ANALYSIS

CODE REQUIREMENTS

CATEGORY	2017 FBC EXISTING BUILDING, 2017 FBC			FFPC 6TH EDITION (NFPA-101 2015)		
	CHPTER	REQUIREMENTS		CHAPTER	REQUIREMENTS	
OCCUPANCY	306.3	F-2, FACTORY INDUSTRIAL LOW-HAZARD (PER FBC306.3)		NFPA 101 40.1.2.1.2	SPECIAL-PURPOSE INDUSTRIAL	
CONSTRUCTION TYPE (FBC 2017)	602.2	TYPE II-B		NFPA 101 TABLE A8.2.1.1	TYPE II (000)	
	903.2	AUTOMATIC SPRINKLERS	NS			
	TABLE 504.3 504.4	MAXIMUM NUMBER OF STORIES	3			
		ACTUAL NUMBER OF STORIES	1			
		MAXIMUM BUILDING HEIGHT	55 FT			
		ACTUAL BUILDING HEIGHT	14 FT±			
OCUPANT LOAD	TABLE 1004.1.2	100 SF/OCCUPANT 800 SF /100=8	8 OCCUP.	NFPA 101 TABLE 7.3.1.2	N/A	
EGRESS CAPACITY	1005.1	0.2 INCHES PER OCCUPANT AT DOORS 8X0.2=1.6	1.6 INCHES	NFPA 101 TABLE 7.3.3.1	0.2 INCHES PER OCCUPANT AT COMPONENTS	1.6
		0.3 INCHES PER OCCUPANT AT STAIRS	2.4 INCHES		0.3 INCHES PER OCCUPANT AT STAIRS	2.4
					MINIMUM CORRIDOR WIDTH	36 INCHES
				NFPA 101 7.2.2.2.1.2	MINIMUM STAIR WIDTH	36 INCHES
				NFPA 101 7.2.1.2.3.2	MINIMUM DOOR OPENING	32 INCHES
EXIT ACCESS TRAVEL DISTANCE	TABLE 1017.2	MAXIMUM	300 FT	NFPA 101 TABLE 40.2.6.1	MAXIMUM TRAVEL DIST	300 FT
				NFPA 101 TABLE 40.2.5	MAXIMUM DEAD END	50 FT
DEAD END CORRIDORS	1020.4	MAXIMUM	50 FT	NFPA 101 TABLE 40.2.5	MAXIMUM COMMON PATH	50 FT
FIRE PROTECTION	TABLE 601 AND TABLE 602	STRUCTURAL FRAME	0 HR			
		BEARING WALLS				
		EXTERIOR	0 HR			
		INTERIOR	0 HR			
		NON BEARING WALLS				
		EXTERIOR (FIRE SEPARATION DISTANCE 5FT<X<100 FT)	N/A			
		INTERIOR	0 HR			
		FLOOR CONSTRUCTION	0 HR			
		ROOF CONSTRUCTION	0 HR			
				NFPA 101 40.3.5	NR	

BUILDING CODE ANALYSIS

2017 FLORIDA BUILDING CODE - EXISTING BUILDING	
101.4.2	PREVIOUS OCCUPANCY, F-2 FACTORY INDUSTRIAL, LOW HAZARD
301.1.1	PRESCRIPTIVE COMPLIANCE METHOD
301.1.4.1	COMPLIANCE NOT REQUIRED
504.1	ALTERATION - LEVEL 2
804.1	HIGH SERVICE PUMP ROOM AND VFD ROOM
805.3	MINIMUM NO. OF EXITS= HIGH SERVICE PUMP ROOM = 2, VFD ROOM=1
100.1.1	NO CHANGE IN OCCUPANCY

FIRE EXTINGUISHER REQUIREMENTS (PER NFPA 10 TABLE 13.6.8.2.1.1)

CATEGORY	CHAPTER	PUMP ROOM	VFD ROOM
FIRE CLASS	NFPA 10 ARTICLE 5.2	CLASS C	CLASS C
HAZARD CLASS	NFPA 10 ARTICLE 5.4	LIGHT HAZARD	LIGHT HAZARD
FIRE EXTINGUISHER RATING	NFPA 10 ARTICLE 5.3	3A:40B:C ABC DRY CHEMICAL	3A:40B:C ABC DRY CHEMICAL
MIN RATING	NFPA 10 ARTICLE 6.2.1.1	2-A	2-A
MAXIMUM FLOOR AREA PER UNIT OF "A"	NFPA 10 ARTICLE 6.2.1.1	3,000 SF	3,000 SF
MAXIMUM FLOOR AREA PER EXTINGUISHER	NFPA 10 ARTICLE 6.2.1.1	11,250 SF	11,250 SF
MAX TRAVEL DISTANCE TO EXTINGUISHER	NFPA 10 ARTICLE 6.2.1.1	75 SF	75 SF
FLOOR AREA TO BE PROTECTED PER EXTINGUISHER	NOT APPLICABLE	2,210 SF	155 SF
NO. OF EXTINGUISHERS NEEDED / PROVIDED	NOT APPLICABLE	1 / 2	1 / 1

REV	ISSUED FOR	DATE	BY
1	BID SET	08-06-18	G.B.

PROJECT ENGINEER:
DESIGNED BY: G.A.B.
DRAWN BY: G.B.
CHECKED BY:
IF THIS BAR DOES NOT MEASURE 1" THEN DRAWING IS NOT TO FULL SCALE 0 1/2" 1"

SHAJAN JOYKUTTY, P.E.
No. 43323
8/20/18

Hazen
HAZEN AND SAWYER
4000 HOLLYWOOD BOULEVARD, SUITE 750N
HOLLYWOOD, FLORIDA 33021
CERTIFICATE OF AUTHORIZATION NO. : 2771

CITY OF HALLANDALE BEACH

WATER TREATMENT PLANT
HIGH SERVICE PUMP REPLACEMENT

Hallandale Beach

PUMP STATION LIFE SAFETY PLAN

DATE: AUGUST 2018
HAZEN NO.: 40621-000
CONTRACT NO.: 1
DRAWING NUMBER: A-01

File: C:\WSTV\A20-PW\WS40289TV-01 Saved By: JOHNSON Save Date: 2018/08/06 9:41 AM
PLOT DATE: 2018/08/06 9:50:31 AM BY: JOHNSON

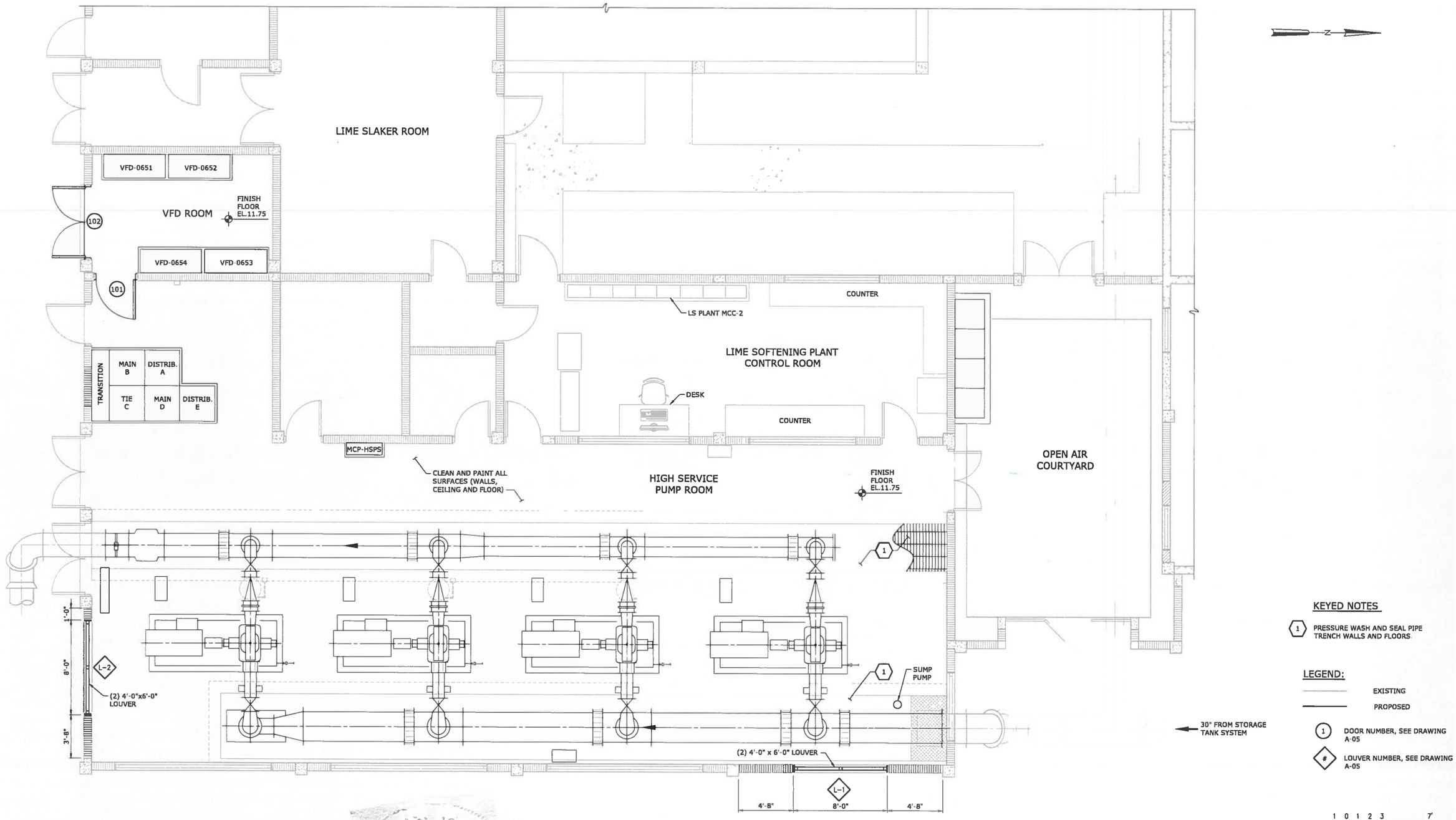

REV	ISSUED FOR	DATE	BY
1	BID SET	08-06-18	G.B.

PROJECT ENGINEER:
DESIGNED BY: G.A.B.
DRAWN BY: G.B.
CHECKED BY:
IF THIS BAR DOES NOT MEASURE 1" THEN DRAWING IS NOT TO FULL SCALE 0 1/2" 1"

SHAJAN JOYKUTTY, No. 43323 P.E.
8/20/18

Hazen
HAZEN AND SAWYER
4000 HOLLYWOOD BOULEVARD, SUITE 750N
HOLLYWOOD, FLORIDA 33021
CERTIFICATE OF AUTHORIZATION NO. : 2771

CITY OF HALLANDALE BEACH

WATER TREATMENT PLANT
HIGH SERVICE PUMP REPLACEMENT

Hallandale Beach

FLOOR PLAN

DATE: AUGUST 2018
HAZEN NO.: 40621-000
CONTRACT NO.: 1
DRAWING NUMBER: A-02

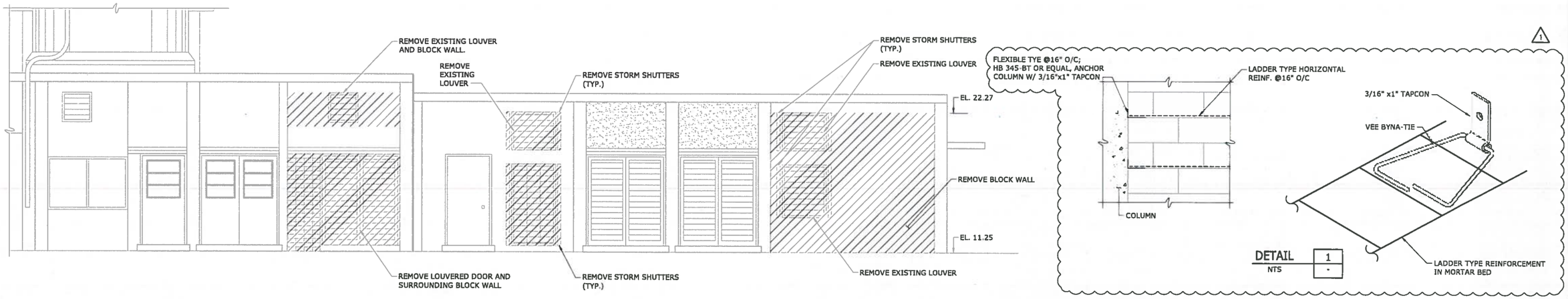

SOUTH ELEVATION - EXISTING

1/4" = 1'-0"

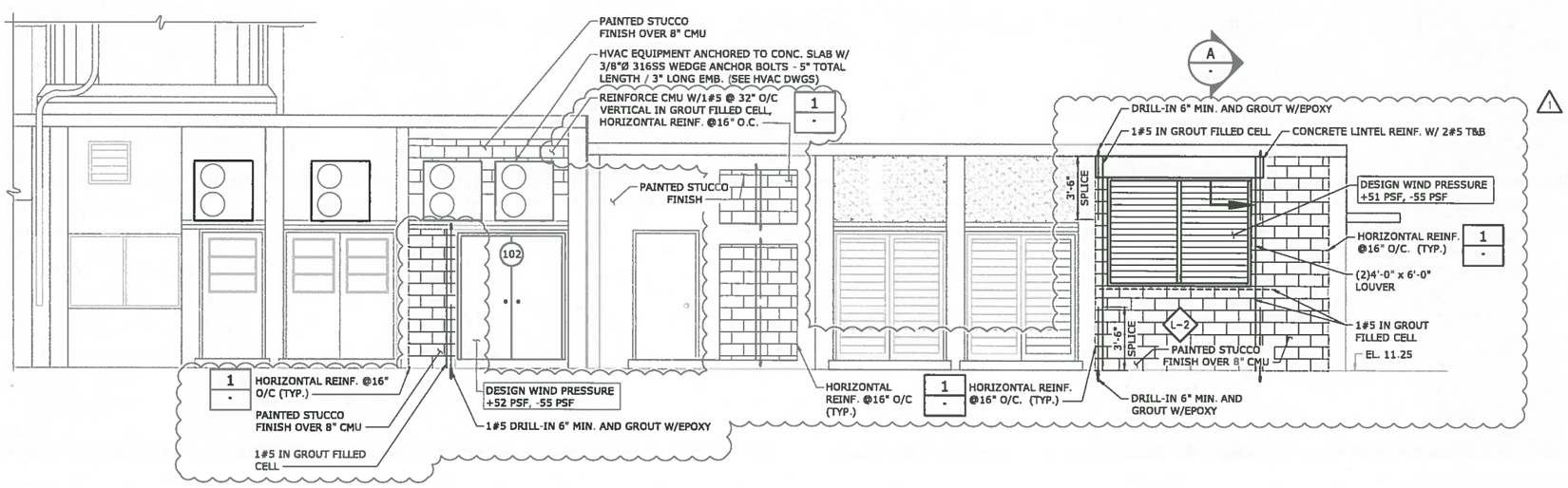

SOUTH ELEVATION - PROPOSED

1/4" = 1'-0"

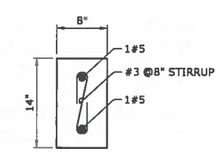

SECTION A
1" = 1'-0"

LEGEND:

- EXISTING
- TO BE REMOVED
- PROPOSED

1"=1'-0" 12" 6 0 1'

1/4"=1'-0" 1 0 1 2 3 7'

REV	ISSUED FOR	DATE	BY
2	BID SET	08-06-18	G.B.
1	REVISED FOR BUILDING DEPT.	06-15-18	G.B.

IF THIS BAR DOES NOT MEASURE 1" THEN DRAWING IS NOT TO FULL SCALE 0 1/2" 1"

PROJECT ENGINEER:
DESIGNED BY: F.A.M.
DRAWN BY: G.K.
CHECKED BY:

SHAJAN JOYKUTTY, P.E.
No. 43323
8/20/18

Hazen
HAZEN AND SAWYER
4000 HOLLYWOOD BOULEVARD, SUITE 750N
HOLLYWOOD, FLORIDA 33021
CERTIFICATE OF AUTHORIZATION NO. : 2771

CITY OF HALLANDALE BEACH

WATER TREATMENT PLANT
HIGH SERVICE PUMP REPLACEMENT

Hallandale Beach

SOUTH ELEVATION

DATE: AUGUST 2018
HAZEN NO.: 40621-000
CONTRACT NO.: 1
DRAWING NUMBER: A-03

File: C:\BWS\VAX20-PRV\US54389\V-03 Saved By: JOHNSON Save Date: 2018/08/08 8:44 AM
PLOT DATE: 2018/08/08 8:50:49 AM BY: JOHNSON

EAST ELEVATION - EXISTING

1/4" = 1'-0"

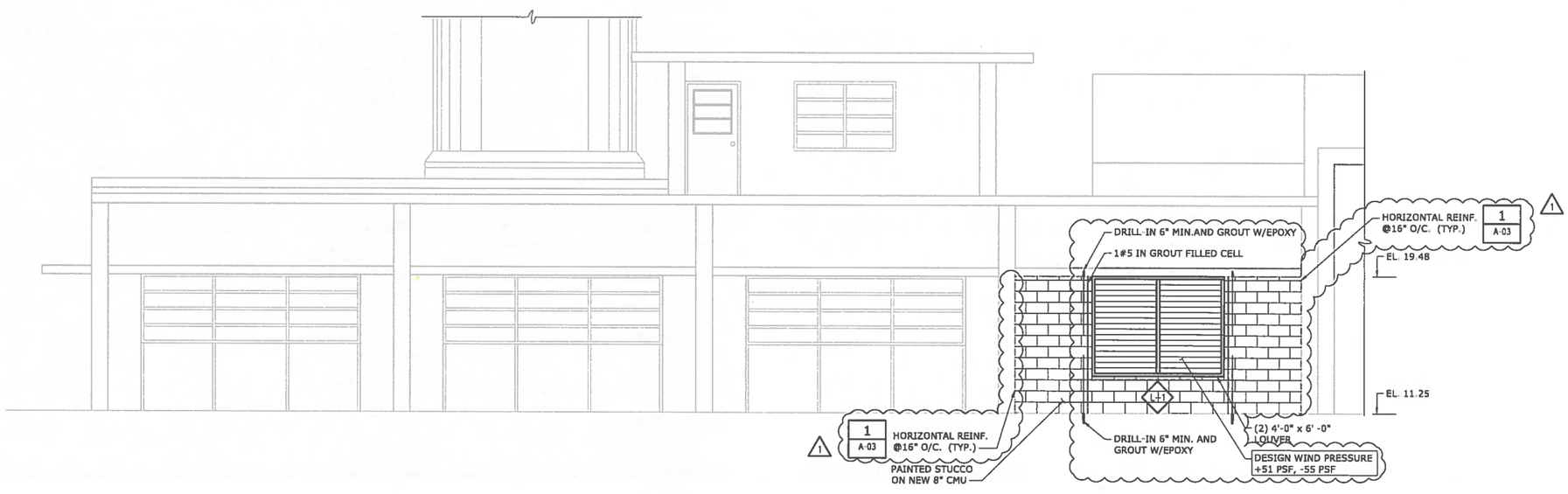

EAST ELEVATION - PROPOSED

1/4" = 1'-0"

LEGEND:

- EXISTING
- TO BE REMOVED
- PROPOSED

1/4"=1'-0" 1 0 1 2 3 7'

REV	ISSUED FOR	DATE	BY
2	BID SET	08-06-18	G.B.
1	REVISED FOR BUILDING DEPT.	06-15-18	G.B.

PROJECT ENGINEER:

DESIGNED BY: F.A.M.

DRAWN BY: G.K.

CHECKED BY:

IF THIS BAR DOES NOT MEASURE 1" THEN DRAWING IS NOT TO FULL SCALE 0 1/2" 1"

SHAJAN JOYKUTTY, P.E.
No. 43323
8/20/18

Hazen

HAZEN AND SAWYER
4000 HOLLYWOOD BOULEVARD, SUITE 750N
HOLLYWOOD, FLORIDA 33021
CERTIFICATE OF AUTHORIZATION NO. : 2771

CITY OF HALLANDALE BEACH

WATER TREATMENT PLANT
HIGH SERVICE PUMP REPLACEMENT

Hallandale Beach

EAST ELEVATION

DATE: AUGUST 2018
HAZEN NO.: 40621-000
CONTRACT NO.: 1
DRAWING NUMBER: A-04

File: C:\Users\JOHN-PC\Dropbox\Apps\Sv-04 Saved By: JOHNSON Save Date: 2018/08/08 9:45 AM
PLOT DATE: 2018/08/08 10:48:11 AM BY: JOHNSON

DOOR SCHEDULE

MARK	QTY	DOOR: INT. OR EXT.	DOOR: FIRE RATING	DOOR: SWING HAND	DOOR: SIZE WIDTH x HEIGHT	DOOR: TYPE	DOOR: PANEL MATERIAL	DOOR: PANEL FINISH	FRAME: TYPE	FRAME: MATERIAL	FRAME: FINISH	HARDWARE: HARDWARE SET	HARDWARE: OPERATION	GLAZING: SIZE (ft.) WIDTH x HEIGHT	GLAZING: MATERIAL	DOOR LOUVER: SIZE (ft.) WIDTH x HEIGHT	DESIGN ULTIMATE WIND PRESSURE (psf): NEG.	DESIGN ULTIMATE WIND PRESSURE (psf): POS.	REMARKS
101	1	INT.	N/A	RHR.	3'-8" x 7'-10"	A	STEEL	PAINT	X	STEEL	PAINT	KEY LOCK HW-1	MANUAL				-	-	
102	1	EXT.	N/A	N/A	6'-0" x 7'-0"	B	STEEL	PAINT	Y	STEEL	PAINT	KEY LOCK HW-1	MANUAL				52	-55	

LEGEND

GS	GALVANIZED STEEL
MFR	MANUFACTURER
LIG	INSULATED GLASS
IMP	IMPACT RESISTANT GLASS

NOTE: SEE SPECIFICATIONS FOR HARDWARE SET NUMBER

DOOR NOTES / SPECIFICATIONS

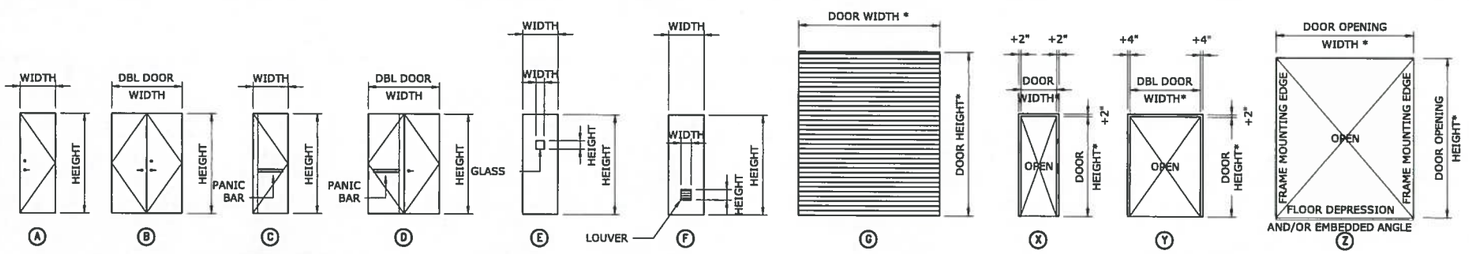

DOOR TYPES

FRAME TYPES

NOTE: * = FOR ROLL-UP DOORS ONLY, THE DOOR WALL OPENING DIMENSIONS ARE THE DIMENSIONS SHOWN ON SCHEDULE, FOR PERSONNEL DOORS, FOLLOW DOOR MANUF. INFO.

LOUVER SCHEDULE

MARK	QTY	MASONRY OPENING WIDTH x HEIGHT	TYPE	MATERIAL	FRAME: FINISH	FRAME: DEPTH	SCREEN: BIRD	SCREEN: INSECT	DAMPER: GRAVITY	DAMPER: FIRE	BLADE TYPE	DESIGN ULTIMATE WIND PRESSURE (psf): NEG.	DESIGN ULTIMATE WIND PRESSURE (psf): POS.	REMARKS
A	2	4'-0"x6'-0"	A	ALUM.	KYNAR	6"	YES	NO	NO	NO		51	-55	
B	2	4'-0"x6'-0"	B	ALUM.	KYNAR	6"	YES	NO	NO	NO		51	-55	

LOUVER NOTES / SPECIFICATIONS

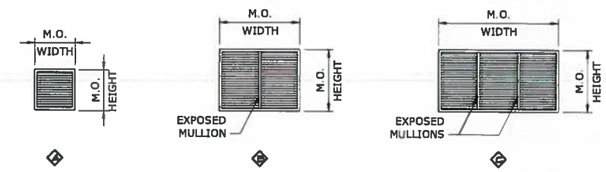

LOUVER TYPES

FINISH SCHEDULE

No.	ROOM/AREA NAME	FLOOR: SUBSTRATE	FLOOR: FINISH	BASE: SUBSTRATE	BASE: FINISH	WALLS: SUBSTRATE	WALLS: FINISH	CEILING: SUBSTRATE	CEILING: FINISH	REMARKS
101	HIGH SERVICE PUMP ROOM	CONC	PT	CMU	PT	CMU	PT	CONC	PT	
102	VFD ROOM	CONC	PT	CMU	PT	CMU	PT	CONC	PT	

FINISH LEGEND

ACT	ACOUSTICAL CEILING TILE	MR-GWB	MOISTURE RESISTANT GYPSUM WALL BOARD
CP-AM	CEILING PANELS - ACOUSTIC MINERAL	MFR	MANUFACTURER'S SPECIFIED FINISH
CMU	CONCRETE MASONRY UNIT	PT	PAINT
CONC	CONCRETE	RUB	RUBBER
ES	EXPOSED STRUCTURE	VCT	VINYL COMPOSITION TILE (RESILIENT FLOOR)
GWB	GYPSUM WALL BOARD		

1. NOMINAL PRESSURES (ASD)= ULTIMATE x 0.6

SHAJAN JOYKUTTY LICENSE No. 43323 STATE OF FLORIDA PROFESSIONAL ENGINEER

8/20/18

REV	ISSUED FOR	DATE	BY
1	BID SET	08-06-18	G.B.

PROJECT ENGINEER:
DESIGNED BY: F.A.M.
DRAWN BY: G.K.
CHECKED BY:
IF THIS BAR DOES NOT MEASURE 1" THEN DRAWING IS NOT TO FULL SCALE 0 1/2" 1"

SHAJAN JOYKUTTY, P.E.
No. 43323

Hazen
HAZEN AND SAWYER
4000 HOLLYWOOD BOULEVARD, SUITE 750N
HOLLYWOOD, FLORIDA 33021
CERTIFICATE OF AUTHORIZATION NO. : 2771

CITY OF HALLANDALE BEACH

WATER TREATMENT PLANT
HIGH SERVICE PUMP REPLACEMENT

Hallandale Beach

SCHEDULES AND DETAILS

DATE: AUGUST 2018
HAZEN NO.: 40621-000
CONTRACT NO.: 1
DRAWING NUMBER: A-05

File: C:\Jobs\Hazen-FW\H40621\A-05 Saved By: JJOHNSON Save Date: 2018/08/08 8:46 AM
PLOT DATE: 2018/08/08 8:51:00 AM BY: JJOHNSON

LIGHTING:

X DENOTES FIXTURE TYPE (TYP.)
SEE SPECIFICATION 16500 FOR FIXTURE SCHEDULE
# DENOTES CIRCUIT NUMBER (TYP.)

RECTANGULAR FIXTURE

LEFT: CEILING MOUNTED FIXTURE
RIGHT: WALL MOUNTED FIXTURE

EMERGENCY WALL-MOUNTED FIXTURE:
LEFT: STANDARD
RIGHT: REMOTE-HEAD

LEFT: CEILING MOUNTED EXIT SIGN
RIGHT: WALL MOUNTED EXIT SIGN
SHADED PORTION DENOTES SIGN FACE

POLE-MOUNTED FIXTURE

PHOTOCELL

LEFT: CEILING MOUNTED OCCUPANCY SENSOR
RIGHT: WALL MOUNTED OCCUPANCY SENSOR
X DENOTES TYPE

RECEPTACLES:

X DENOTES RECEPTACLE TYPE (TYP.):
GFCI DENOTES GROUND FAULT CIRCUIT INTERRUPT
UPS DENOTES UNINTERRUPTIBLE POWER SUPPLY
WPCR DENOTES WEATHERPROOF CORROSION RESISTANT
# DENOTES CIRCUIT NUMBER (TYP.)

RECEPTACLES:
LEFT: SIMPLEX
MIDDLE: DUPLEX
RIGHT: QUADRUPLEX

MULTI-OUTLET RECEPTACLE:
LEFT: SIMPLEX
RIGHT: DUPLEX

OTHER RECEPTACLES:
LEFT: 240 VOLT
RIGHT: SPECIAL PURPOSE

HVAC AND FIRE ALARM

FIRE ALARM CONTROL PANEL

FIRE ALARM ANNUNCIATOR PANEL

FIRE ALARM PULL STATION

FIRE ALARM INDICATOR:
X DENOTES ALERT TYPE (TYP.):
A DENOTES AUDIBLE
V DENOTES VISIBLE (# DENOTES STROBE INTENSITY)

FIRE ALARM INDICATOR MOUNTED ABOVE A FIRE ALARM PULL STATION

DUCT DETECTOR

SMOKE DETECTOR:
X DENOTES TYPE:
Z DENOTES IONIZATION
P DENOTES PHOTOELECTRIC
T DENOTES THERMAL

HEAT DETECTOR

THERMOSTAT

AMBIENT TEMPERATURE TRANSMITTER

SWITCHES

WALL SWITCH:
X DENOTES TYPE:
NO SUBSCRIPT DENOTES SINGLE-POLE SWITCH
3 DENOTES 3-WAY SWITCH
4 DENOTES 4-WAY SWITCH
M DENOTES MANUAL MOTOR STARTER
# DENOTES CIRCUIT NUMBER
WPCR DENOTES WEATHERPROOF CORROSION RESISTANT

COMBINATION MOTOR STARTER

DISCONNECT SWITCH

LOCAL CONTROL STATION

ELEMENTARY CONTROL SCHEMATICS

3-POSITION SELECTOR SWITCH:
HOA DENOTES HAND/OFF/AUTO
LOR DENOTES LOCAL/OFF/REMOTE
FOR DENOTES FORWARD/OFF/REVERSE

PUSHBUTTON SWITCHES:
LEFT: N.O.
RIGHT: N.C.
TEXT DENOTES LEGEND PLATE

EMERGENCY STOP MUSHROOM HEAD PUSHBUTTON SWITCH (N.C.):
TEXT DENOTES LEGEND PLATE

PUSHBUTTON SWITCH N.C. WITH LOCK-OUT:
TEXT DENOTES LEGEND PLATE

SELECTOR SWITCH:
LEFT: STANDARD
RIGHT: SPRING-RETURN
TEXT DENOTES LEGEND PLATE

SOLID-STATE OVERLOAD RELAY

THERMAL OVERLOAD RELAY

NOTATION LEGEND:
NO/NC: NORMALLY OPEN/CLOSED
RO/RC: RISE-TO-OPEN/CLOSE
FO/FC: FALL-TO-OPEN/CLOSE
TO/TC: TIME-OPEN/CLOSE

CONTACTS:
TEXT DENOTES COIL ID

SWITCHES:
TEXT DENOTES TAG NUMBER

INDICATOR LIGHT:
LEFT: STANDARD/RIGHT: PUSH-TO-TEST
X DENOTES COLOR

RUN TIME METER

SOLENOID VALVE

MOTOR PROTECTION RELAY

CPT 480/120VAC — CONTROL POWER TRANSFORMER

MECHANICAL INTERLOCK CONNECTION

MOTOR SPACE HEATER

COIL:
X DENOTES TYPE:
M DENOTES MOTOR STARTER
CR DENOTES CONTROL RELAY
TD DENOTES TIME DELAY RELAY
TR DENOTES TIMER RANGE
TS DENOTES TIMER SETPOINT
PR DENOTES INTERPOSING PILOT RELAY
LC DENOTES LIGHTING CONTACTOR
Y DENOTES REFERENCE LINE NUMBER

EQUIPMENT/DEVICE LOCATION SYMBOLS

LOCATED IN MCC

LOCATED IN STAND-ALONE MOTOR STARTER/CONTROLLER

LOCATED IN FIELD

LOCATED AT PANEL:
X DENOTES PANEL ID
L DENOTES LOCAL CONTROL STATION

SINGLE-LINE DIAGRAMS

XFMR
kVA
480-120/208V
3P/4W
DRY TRANS
TRANSFORMER

PROTECTIVE RELAY:
NUMBER DENOTES IEEE DEVICE FUNCTION

MOTOR AND TYPICAL ADDITIONAL DEVICES:
TSH: TEMPERATURE SWITCH
MSH: MOTOR SPACE HEATER
CF: COOLING FAN
TE: TEMPERATURE ELEMENT
ME: MOISTURE DETECTOR

LINE CONTINUATION INDICATOR
X DENOTES CONNECTION

INSTRUMENT TAG:
X DENOTES INSTRUMENT TYPE
Y DENOTES INSTRUMENT NUMBER
SEE DRAWING I1 FOR INSTRUMENT ABBREVIATIONS

100A FUSE

FUSED DISCONNECT SWITCH

DISCONNECT SWITCH

FUSED DISCONNECT SWITCH

LOW-VOLTAGE POWER CIRCUIT BREAKER:
LEFT: FIXED-MOUNT
RIGHT: DRAWOUT
E.O. DENOTES ELECTRICALLY OPERATED
LSIG DENOTES INSTALLED TRIP FUNCTIONS:
L DENOTES LONG-TIME
S DENOTES SHORT-TIME
I DENOTES INSTANTANEOUS
G DENOTES GROUND FAULT
Z DENOTES ZONE-SELECTIVE INTERLOCKING
CTR DENOTES BREAKER-SPECIFIC CT AND RATIOS

MEDIUM-VOLTAGE DRAWOUT POWER CIRCUIT BREAKER:
E.O. DENOTES ELECTRICALLY OPERATED
BATT. DENOTES BATTERY BACKUP POWER

LOW-VOLTAGE MOLDED CASE CIRCUIT BREAKER
LEFT: THERMAL-MAGNETIC TRIP UNIT
RIGHT: ELECTRONIC TRIP UNIT

MOTOR CIRCUIT PROTECTOR

GROUND

CT:
NUMBERS DENOTE CT WINDING RATIO AND CT QUANTITY

GFCT:
NUMBERS DENOTE GFCT WINDING RATIO AND GFCT QUANTITY

PT:
NUMBERS DENOTE PT WINDING VOLTAGES AND PT QUANTITY

DRAW-OUT ELEMENT

LEFT: PANELBOARD
RIGHT: COMBINATION POWER UNIT
X DENOTES PANEL ID

LIGHTNING ARRESTOR

SINGLE-LINE DIAGRAMS, CONT'D.

LEFT: RESISTOR
RIGHT: LINE REACTOR:
#% DENOTES IMPEDANCE

CAPACITOR

SHUNT TRIP

SURGE PROTECTIVE DEVICE

KIRK-KEY INTERLOCK

LEFT: FVNR STARTER:
X DENOTES NEMA SIZE
DP DENOTES DEFINITE PURPOSE CONTACTOR
RIGHT: FVR STARTER

LEFT: VFD WITH LINE REACTOR
MIDDLE: VFD WITH HARMONIC FILTER
RIGHT: VFD WITH LINE REACTOR AND FVNR BYPASS
X DENOTES NEMA SIZE

LEFT: RVSS STARTER
RIGHT: RVSS STARTER WITH FVNR BYPASS
X DENOTES NEMA SIZE

VFD WITH RVSS BYPASS

RVAT STARTER:
X DENOTES NEMA SIZE
#% DENOTES TAP SETTING

SINGLE-LINE DIAGRAMS, CONT'D.

500kW
480V,3Ø,4W
GENERATOR

ATS
480V, 800A
3Ø 4W 4P
65kA
OPEN TRANSITION
CONTACTOR-STYLE ATS OR MTS

ATS
480V, 800A
3Ø 4W 4P
65kA
OPEN TRANSITION
CONTACTOR-STYLE ATS OR MTS WITH OFF POSITION

ATS
480V, 800A
3Ø 4W 4P
65kA
OPEN TRANSITION
CONTACTOR-STYLE ATS OR MTS, SERVICE-ENTRANCE RATED

ATS
480V, 800AF/800AT
3Ø 4W 4P
65kA
OPEN TRANSITION
MCCB-STYLE ATS OR MTS

ATS
480V, 800AF/800AT
3Ø 4W 4P
65kA
OPEN TRANSITION
DRAWOUT CB-STYLE ATS OR MTS

MISC PLAN VIEW SYMBOLS

EQUIPMENT CONNECTION

GROUND RODS:
LEFT: BURIED
RIGHT: IN TESTWELL

DUCTBANK TAG:
X DENOTES DUCTBANK ID

INSTRUMENT TAG:
X DENOTES INSTRUMENT TYPE
# DENOTES INSTRUMENT NUMBER
SEE DRAWING I1 FOR INSTRUMENT ABBREVIATIONS

CONDUIT TAGS:
P DENOTES POWER
C DENOTES CONTROL
I DENOTES INSTRUMENTATION
XXXX DENOTES CONDUIT ID
XXX-XXX DENOTES CONDUIT ID

COMMUNICATIONS

TELEPHONE OR NETWORK DROP

PAGER RECEPTACLE

HORN/LIGHT DEVICE

PA UNIT

WIRING

CONDUIT HOME RUN

CONDUIT EXPOSED

CONCRETE ENCASED CONDUIT

CONDUIT CONCEALED

FLEXIBLE CONDUIT

CONCRETE ENCASED DUCTBANK

LEFT: CONDUIT RISE (TURN UP)
RIGHT: CONDUIT DROP (TURN DOWN)

REV	ISSUED FOR	DATE	BY
1	BID SET	08-06-18	G.B.

PROJECT ENGINEER:
DESIGNED BY: P. BOWLES
DRAWN BY: T. RAHLAN
CHECKED BY: B. PICKETT

IF THIS BAR DOES NOT MEASURE 1" THEN DRAWING IS NOT TO FULL SCALE (0 1/2" 1")

JOSEPH B. PICKETT LICENSE No. 74106 STATE OF FLORIDA PROFESSIONAL ENGINEER 8/7/18

J. BRAD PICKETT, PE NO. 74106

Hazen
HAZEN AND SAWYER
4000 HOLLYWOOD BOULEVARD, SUITE 750N
HOLLYWOOD, FLORIDA 33021
CERTIFICATE OF AUTHORIZATION NO. : 2771

CITY OF HALLANDALE BEACH

WATER TREATMENT PLANT
HIGH SERVICE PUMP REPLACEMENT

Hallandale Beach

ELECTRICAL
LEGEND AND SYMBOLS

DATE: AUGUST 2018
HAZEN NO.: 40621-000
CONTRACT NO.: 1
DRAWING NUMBER: E-01

File: Q:\WRK\HAZEN-PW\040540370\E-01 Saved By JOHNSON Save Date: 2018/08/08 9:52 AM
PLOT DATE: 2018/08/08 10:23:14 AM BY: JOHNSON

BID SET

ABBREVIATIONS

AE	ANALYSIS ELEMENT
AHU	AIR HANDLING UNIT
AIC	AMPERE INTERRUPTING CAPACITY
AIT	ANALYSIS INDICATING TRANSMITTER
ANSI	AMERICAN NATIONAL STANDARDS INSTITUTE
ASCE	AMERICAN SOCIETY OF CIVIL ENGINEERS
ASME	AMERICAN SOCIETY OF MECHANICAL ENGINEERS
AF	AMPERE FRAME
AT	AMPERE TRIP
ATS	AUTOMATIC TRANSFER SWITCH
BC	BYPASS CONTACTOR
BKR	BREAKER
(L/V)CP	(LOCAL/VENDOR) CONTROL PANEL
CPT	CONTROL POWER TRANSFORMER
CT	CURRENT TRANSFORMER
DB	DUCTBANK
DSW	DISCONNECT SWITCH
EHH	ELECTRIC HAND HOLE
EMH	ELECTRIC MANHOLE
EO	ELECTRICALLY OPERATED
ETM	ELAPSED TIME METER
ETU	ELECTRONIC TRIP UNIT
FAAP	FIRE ALARM ANNUNCIATOR PANEL
FACP	FIRE ALARM CONTROL PANEL
FS	FLOW SWITCH
FSL	FLOW SWITCH LOW
FVNR	FULL VOLTAGE NON-REVERSING
FVR	FULL VOLTAGE REVERSING
GFCI	GROUND FAULT CIRCUIT INTERRUPTER
GFCT	GROUND FAULT CURRENT TRANSFORMER
GNG	GO-NO GO
GND	GROUND
HOA	HAND-OFF-AUTO
HPU	HYDRAULIC POWER UNIT
IC	INPUT CONTACTOR
IEEE	INSTITUTE OF ELECTRICAL AND ELECTRONICS ENGINEERS
ISO	INTERNATIONAL ORGANIZATION FOR STANDARDIZATION
JB	JUNCTION BOX
LCS	LOCAL CONTROL STATION
LP	LIGHTING PANEL
LS	LEVEL SWITCH
LSL	LEVEL SWITCH LOW
LSLL	LEVEL SWITCH LOW-LOW
LSH	LEVEL SWITCH HIGH
LSHH	LEVEL SWITCH HIGH-HIGH
LT	LEVEL TRANSMITTER
MFR	MULTI-FUNCTION RELAY
MH	MANHOLE
MOD	MOTOR OPERATED DAMPER
MOG	MOTOR OPERATED GATE
MOL	MOTOR OPERATED LOUVER
MOV	MOTOR OPERATED VALVE
MPR	MOTOR PROTECTION RELAY
MTD	MOUNTED
MTS	MANUAL TRANSFER SWITCH
MWTS	MOTOR WINDING TEMPERATURE SWITCH
NC	NORMALLY CLOSED
NEC	NATIONAL ELECTRICAL CODE
NEMA	NATIONAL ELECTRICAL MANUFACTURERS ASSN
NFPA	NATIONAL FIRE PROTECTION ASSOCIATION
NO	NORMALLY OPEN
NTS	NOT TO SCALE
OC	OUTPUT CONTACTOR
OL	OVERLOAD

ABBREVIATIONS, CONT.

PB	PULLBOX
PC	PHOTOCELL
PCC	POINT OF COMMON COUPLING
PE	PRESSURE ELEMENT
PIT	PRESSURE INDICATING TRANSMITTER
PLC	PROGRAMMABLE LOGIC CONTROLLER
PP	POWER PANEL
PST	PHASE SHIFTING TRANSFORMER
PT	POTENTIAL TRANSFORMER
PTT	PUSH TO TEST
RCS	REMOTE CONTROL STATION
RECP	RECEPTACLE
RIO	REMOTE I/O
RM	ROOM
RTD	RESISTANCE THERMAL DEVICE
RTU	REMOTE TELEMETRY UNIT
RVAT	REDUCED VOLTAGE AUTO TRANSFORMER
RVSS	REDUCED VOLTAGE SOLID STATE
SA	SUPPLY AIR
S.E.	SERVICE ENTRANCE
SP. C.	SPARE CONDUIT
SPD	SURGE PROTECTIVE DEVICE
SST	STAINLESS STEEL
TB	TEST BLOCK
TC	TIMED CLOSE
TO	TIMED OPEN
TSH	TWISTED SHIELDED
TX	TRANSFORMER
TYP	TYPICAL
UPS	UNINTERRUPTIBLE POWER SUPPLY
VFD	VARIABLE FREQUENCY DRIVE
WPCR	WEATHER PROOF CORROSION RESISTANT
WT	WALK THROUGH
XFMR	TRANSFORMER

DUCTBANK NUMBER	CONDUIT	SIZE	FROM	TO
DB-01	P-HSP-001	4"	EXISTING SWGR-MF-1	SWBD-HSPS
	P-HSP-002	4"	EXISTING SWGR-MF-1	SWBD-HSPS
	P-HSP-003	4"	EXISTING SWGR-MF-1	SWBD-HSPS
	P-HSP-004	4"	EXISTING SWGR-MF-1	SWBD-HSPS
	P-HSP-005	4"	EXISTING SWGR-MF-1	SWBD-HSPS
	P-HSP-006	4"	EXISTING SWGR-MF-1	SWBD-HSPS
	P-HSP-007	4"	EXISTING SWGR-MF-1	SWBD-HSPS
	P-HSP-009	4"	SWGR-MF-2	SWBD-HSPS
	P-HSP-010	4"	SWGR-MF-2	SWBD-HSPS
	P-HSP-011	4"	SWGR-MF-2	SWBD-HSPS
	P-HSP-012	4"	SWGR-MF-2	SWBD-HSPS
	P-HSP-013	4"	SWGR-MF-2	SWBD-HSPS
	P-HSP-014	4"	SWGR-MF-2	SWBD-HSPS
	P-HSP-015	4"	SWGR-MF-2	SWBD-HSPS
	P-HSP-090	2"	PPB-1A	EMH-1
	P-HSP-091	2"	PPB-1A	EMH-1
	P-HSP-092	2"	PPB-1A	EMH-1
	C-HSP-060	1"	CPB-1A	EMH-1
	C-HSP-061	1"	CPB-1A	EMH-1
	C-HSP-062	1"	CPB-1A	EMH-1
DB-02	P-HSP-001	4"	EXISTING SWGR-MF-1	SWBD-HSPS
	P-HSP-002	4"	EXISTING SWGR-MF-1	SWBD-HSPS
	P-HSP-003	4"	EXISTING SWGR-MF-1	SWBD-HSPS
	P-HSP-004	4"	EXISTING SWGR-MF-1	SWBD-HSPS
	P-HSP-005	4"	EXISTING SWGR-MF-1	SWBD-HSPS
	P-HSP-006	4"	EXISTING SWGR-MF-1	SWBD-HSPS
	P-HSP-007	4"	EXISTING SWGR-MF-1	SWBD-HSPS
	P-HSP-009	4"	SWGR-MF-2	SWBD-HSPS
	P-HSP-010	4"	SWGR-MF-2	SWBD-HSPS
	P-HSP-011	4"	SWGR-MF-2	SWBD-HSPS
	P-HSP-012	4"	SWGR-MF-2	SWBD-HSPS
	P-HSP-013	4"	SWGR-MF-2	SWBD-HSPS
	P-HSP-014	4"	SWGR-MF-2	SWBD-HSPS
	P-HSP-015	4"	SWGR-MF-2	SWBD-HSPS
DB-03	P-HSP-001	4"	EXISTING SWGR-MF-1	SWBD-HSPS
	P-HSP-002	4"	EXISTING SWGR-MF-1	SWBD-HSPS
	P-HSP-003	4"	EXISTING SWGR-MF-1	SWBD-HSPS
	P-HSP-004	4"	EXISTING SWGR-MF-1	SWBD-HSPS
	P-HSP-005	4"	EXISTING SWGR-MF-1	SWBD-HSPS
	P-HSP-006	4"	EXISTING SWGR-MF-1	SWBD-HSPS
	P-HSP-007	4"	EXISTING SWGR-MF-1	SWBD-HSPS
	P-HSP-009	4"	SWGR-MF-2	SWBD-HSPS
	P-HSP-010	4"	SWGR-MF-2	SWBD-HSPS
	P-HSP-011	4"	SWGR-MF-2	SWBD-HSPS
	P-HSP-012	4"	SWGR-MF-2	SWBD-HSPS
	P-HSP-013	4"	SWGR-MF-2	SWBD-HSPS
	P-HSP-014	4"	SWGR-MF-2	SWBD-HSPS
	P-HSP-015	4"	SWGR-MF-2	SWBD-HSPS

DUCTBANK SCHEDULE

NOTES:

1. UNLESS SPECIFICALLY NOTED OTHERWISE, ALL UNDERGROUND CONCRETE ENCASED ELECTRICAL CONDUITS SHALL BE PER STANDARD DETAIL 1611801.
2. THE INSTALLATION OF ALL CONCRETE ENCASED ELECTRICAL CONDUITS SHALL COMPLY WITH ACI 318, SECTION 6.3. CONTRACTOR SHALL SUPPLY EXPANSION JOINT FITTINGS AS REQUIRED FOR THERMAL EXPANSION AND DEFLECTION.
3. BOND ALL NEW CONCRETE ENCASED GROUND CONDUCTORS TO EXISTING GROUND CONDUCTORS IN ALL MANHOLES, PULL BOXES, CABLE TRAYS, AND SIMILAR LOCATIONS WHERE APPLICABLE.
4. UNLESS OTHERWISE SPECIFIED OR NOTED, ALL WALL MOUNTED ELECTRICAL PANELS, ENCLOSURES, AND SIMILAR EQUIPMENT SHALL BE MOUNTED 6'-6" (MAX) FROM THE TOP OF THE PANEL TO FINISHED FLOOR OR GRADE.
5. UNLESS OTHERWISE NOTED, ALL LIGHTING SWITCHES, CONTROL SWITCHES, AND SIMILAR EQUIPMENT SHALL BE MOUNTED WITH THEIR CENTERLINE APPROXIMATELY 4'-0" ABOVE FINISHED FLOOR, SLAB, OR GRADE.
6. A SEPARATE EQUIPMENT GROUNDING CONDUCTOR SHALL BE PROVIDED FOR EACH CIRCUIT (SEPARATE CONDUCTOR IN THE CONDUIT). THE CONDUCTOR SHALL BE TERMINATED AT THE PROPER DEVICE, TERMINAL, OR LUG AT THE POWER SOURCE (MCC GROUND BUS, PANELBOARD GROUND BUS, ETC.). GROUND CONDUCTOR SIZE SHALL BE PER THE LATEST EDITION OF THE NEC.
7. UNLESS SPECIFICALLY NOTED OTHERWISE, EXISTING PAVEMENT SHALL BE SAW CUT AND REMOVED TO ALLOW FOR THE INSTALLATION OF NEW ELECTRICAL DUCTBANKS. AFTER INSTALLATION, REPLACE PAVEMENT WITH NEW TO MATCH ORIGINAL CONDITIONS.
8. LIGHTNING PROTECTION SHALL BE PROVIDED FOR THE STRUCTURES INDICATED ON THE DRAWINGS AND IN ACCORDANCE WITH SECTION 16670.
9. ALL PROCESS INSTRUMENTS SHALL BE PROVIDED WITH A LOCAL DISCONNECT SWITCH AS SPECIFIED IN SPECIFICATION SECTION 16141.
10. REFERENCE SECTION 01520 FOR CONSTRUCTION SEQUENCING REQUIREMENTS.
11. CONDUIT HOMERUNS ARE NOT SHOWN ON DRAWINGS. CONTRACTOR SHALL REFER TO CONDUIT AND WIRE SCHEDULE, RISER DIAGRAMS, SINGLE LINE DIAGRAMS, AND OTHER DRAWINGS FOR CONDUIT AND WIRE REQUIREMENTS.
12. CONTRACTOR NOTE NATIONALLY RECOGNIZED TESTING LABORATORY APPROVALS FOR ALL ELECTRICAL EQUIPMENT, LUMINAIRES, CABLES, CONDUCTORS, AND DEVICES SHALL BE FIELD VERIFIED AND APPROVED FOR THE ENVIRONMENT THEY ARE INSTALLED PER 2014 NEC ARTICLES 90.7 AND 110.3(A)(B).
13. CONTRACTOR NOTE ELECTRICAL PERMIT IS REQUIRED BY FLORIDA BUILDING CODE (FBC) AND BROWARD COUNTY ADMINISTRATIVE PROVISIONS (BCAP) 104.4.1 AND 105.3.1.4.5.
14. CONTRACTOR NOTE SELECTIVE COORDINATION OF ELECTRICAL SERVICE EQUIPMENT AND DOWNSTREAM PANELS SHALL COMPLY WITH 2014 NEC ARTICLE 240.86.

JOSEPH B. PICKETT LICENSE No. 74106 STATE OF FLORIDA PROFESSIONAL ENGINEER 8/7/18

J. BRAD PICKETT, PE NO. 74106

REV	ISSUED FOR	DATE	BY
2	BID SET	08-06-18	G.B.
1	BUILDING DEPT COMMENTS	4/2018	JBP

PROJECT ENGINEER:
DESIGNED BY: P. BOWLES
DRAWN BY: T. RAHLAN
CHECKED BY: B. PICKETT
IF THIS BAR DOES NOT MEASURE 1" THEN DRAWING IS NOT TO FULL SCALE 0 1/2" 1"

Hazen
HAZEN AND SAWYER
4000 HOLLYWOOD BOULEVARD, SUITE 750N
HOLLYWOOD, FLORIDA 33021
CERTIFICATE OF AUTHORIZATION NO. : 2771

CITY OF HALLANDALE BEACH

WATER TREATMENT PLANT
HIGH SERVICE PUMP REPLACEMENT

Hallandale Beach

ELECTRICAL
GENERAL NOTES,
ABBREVIATIONS, AND
DUCTBANK SCHEDULE

DATE: AUGUST 2018
HAZEN NO.: 40621-000
CONTRACT NO.: 1
DRAWING NUMBER: E-02

BID SET

File: C:\PWS\HAZEN-PW\JAC4582\N\E-02 Saved By: JOHNSON Save Date: 2018/08/06 9:51 AM
PLOT DATE: 2018/08/06 10:31:38 AM BY: JOHNSON

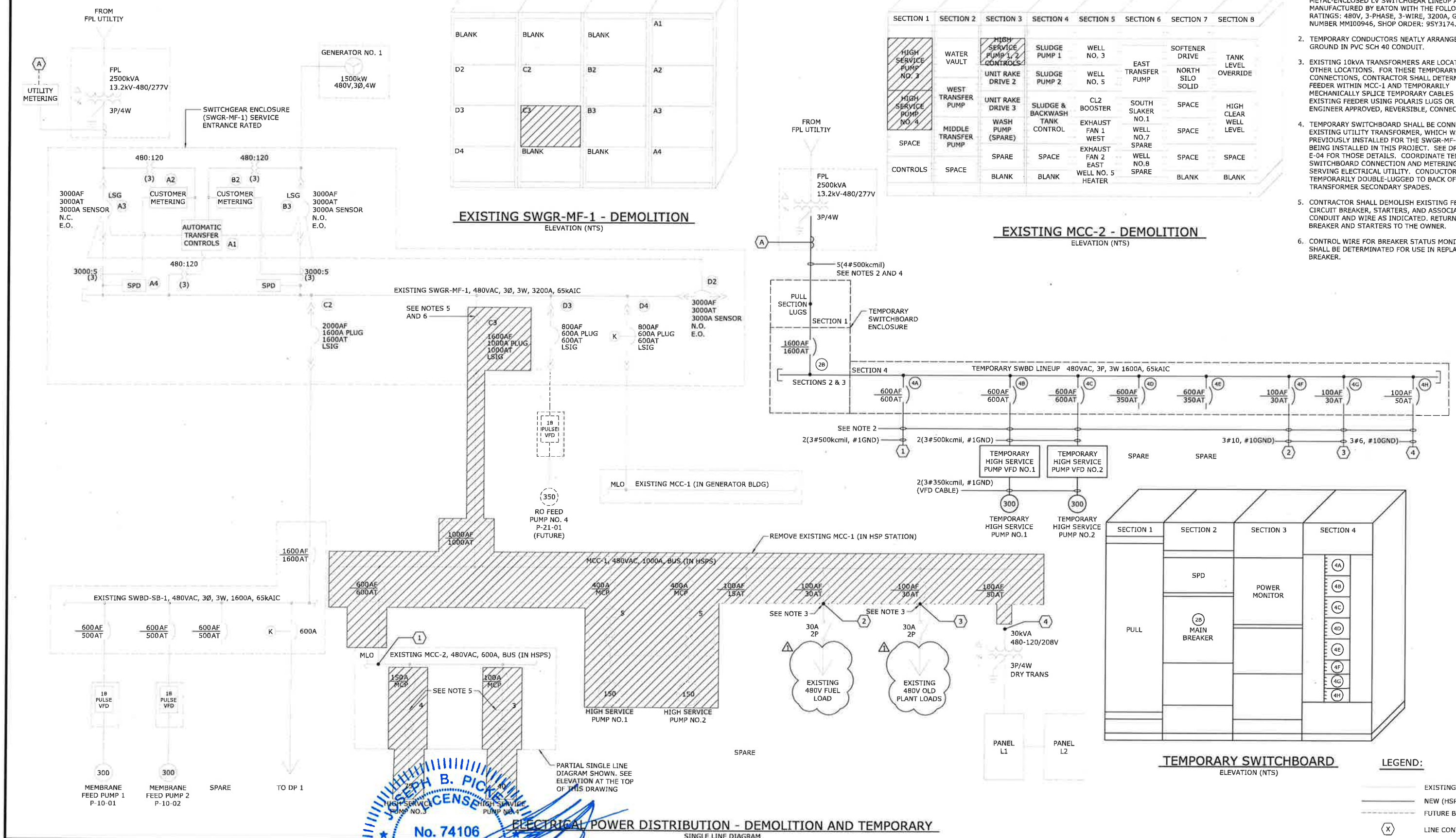

EXISTING SWGR-MF-1 - DEMOLITION
ELEVATION (NTS)

BLANK	BLANK	BLANK	A1
D2	C2	B2	A2
D3	C3	B3	A3
D4	BLANK	BLANK	A4

EXISTING MCC-2 - DEMOLITION
ELEVATION (NTS)

SECTION 1	SECTION 2	SECTION 3	SECTION 4	SECTION 5	SECTION 6	SECTION 7	SECTION 8
HIGH SERVICE PUMP NO. 3	WATER VAULT	HIGH SERVICE PUMP 1, 2 CONTROLS	SLUDGE PUMP 1	WELL NO. 3	EAST TRANSFER PUMP	SOFTENER DRIVE	TANK LEVEL OVERRIDE
	WEST TRANSFER PUMP	UNIT RAKE DRIVE 2	SLUDGE PUMP 2	WELL NO. 5		NORTH SILO SOLID	
HIGH SERVICE PUMP NO. 4		UNIT RAKE DRIVE 3	SLUDGE & BACKWASH TANK CONTROL	CL2 BOOSTER	SOUTH SLAKER NO.1	SPACE	HIGH CLEAR WELL LEVEL
SPACE	MIDDLE TRANSFER PUMP	WASH PUMP (SPARE)		EXHAUST FAN 1 WEST	WELL NO.7 SPARE	SPACE	
		SPARE	SPACE	EXHAUST FAN 2 EAST	WELL NO.8 SPARE	SPACE	SPACE
CONTROLS	SPACE	BLANK	BLANK	WELL NO. 5 HEATER		BLANK	BLANK

TEMPORARY SWITCHBOARD
ELEVATION (NTS)

NOTES:

1. EXISTING SWGR-MF-1 IS A MAGNUM DS METAL-ENCLOSED LV SWITCHGEAR LINEUP AS MANUFACTURED BY EATON WITH THE FOLLOWING RATINGS: 480V, 3-PHASE, 3-WIRE, 3200A, G.O. NUMBER MMI00946, SHOP ORDER: 9SY3174.
2. TEMPORARY CONDUCTORS NEATLY ARRANGED ON THE GROUND IN PVC SCH 40 CONDUIT.
3. EXISTING 10kVA TRANSFORMERS ARE LOCATED IN OTHER LOCATIONS. FOR THESE TEMPORARY CONNECTIONS, CONTRACTOR SHALL DETERMINATE FEEDER WITHIN MCC-1 AND TEMPORARILY MECHANICALLY SPLICE TEMPORARY CABLES WITH EXISTING FEEDER USING POLARIS LUGS OR OTHER ENGINEER APPROVED, REVERSIBLE, CONNECTION.
4. TEMPORARY SWITCHBOARD SHALL BE CONNECTED TO EXISTING UTILITY TRANSFORMER, WHICH WAS PREVIOUSLY INSTALLED FOR THE SWGR-MF-2 LINEUP BEING INSTALLED IN THIS PROJECT. SEE DRAWING E-04 FOR THOSE DETAILS. COORDINATE TEMPORARY SWITCHBOARD CONNECTION AND METERING WITH SERVING ELECTRICAL UTILITY. CONDUCTORS SHALL BE TEMPORARILY DOUBLE-LUGGED TO BACK OF TRANSFORMER SECONDARY SPADES.
5. CONTRACTOR SHALL DEMOLISH EXISTING FEEDER CIRCUIT BREAKER, STARTERS, AND ASSOCIATED CONDUIT AND WIRE AS INDICATED. RETURN CIRCUIT BREAKER AND STARTERS TO THE OWNER.
6. CONTROL WIRE FOR BREAKER STATUS MONITORING SHALL BE DETERMINATED FOR USE IN REPLACEMENT BREAKER.

LEGEND:

- EXISTING
- NEW (HSPS)
- FUTURE BUILDOUT
- (X) LINE CONTINUATION

ELECTRICAL POWER DISTRIBUTION - DEMOLITION AND TEMPORARY
SINGLE LINE DIAGRAM

REV	ISSUED FOR	DATE	BY
2	BID SET	08-06-18	G.B.
1	BUILDING DEPT COMMENTS	4/2018	JBP

PROJECT ENGINEER:	
DESIGNED BY:	P. BOWLES
DRAWN BY:	T. RAHLAN
CHECKED BY:	B. PICKETT

IF THIS BAR DOES NOT MEASURE 1" THEN DRAWING IS NOT TO FULL SCALE 0 1/2" 1"

JOSEPH B. PICKETT LICENSE No. 74106 STATE OF FLORIDA PROFESSIONAL ENGINEER 8/7/18

J. BRAD PICKETT, PE NO. 74106

Hazen
HAZEN AND SAWYER
4000 HOLLYWOOD BOULEVARD, SUITE 750N
HOLLYWOOD, FLORIDA 33021
CERTIFICATE OF AUTHORIZATION NO. : 2771

CITY OF HALLANDALE BEACH

WATER TREATMENT PLANT
HIGH SERVICE PUMP REPLACEMENT

Hallandale Beach

ELECTRICAL
OVERALL PLANT SINGLE LINE DIAGRAM - DEMOLITION AND TEMPORARY

DATE:	AUGUST 2018
HAZEN NO.:	40621-000
CONTRACT NO.:	1
DRAWING NUMBER:	E-03

File: C:\Bid\Hazen-HWS\40621\E-03 Saved By: JJohnson Save Date: 2018/08/06 10:08 AM
Plot Date: 2018/08/06 10:12:14 AM BY: JJOHNSON

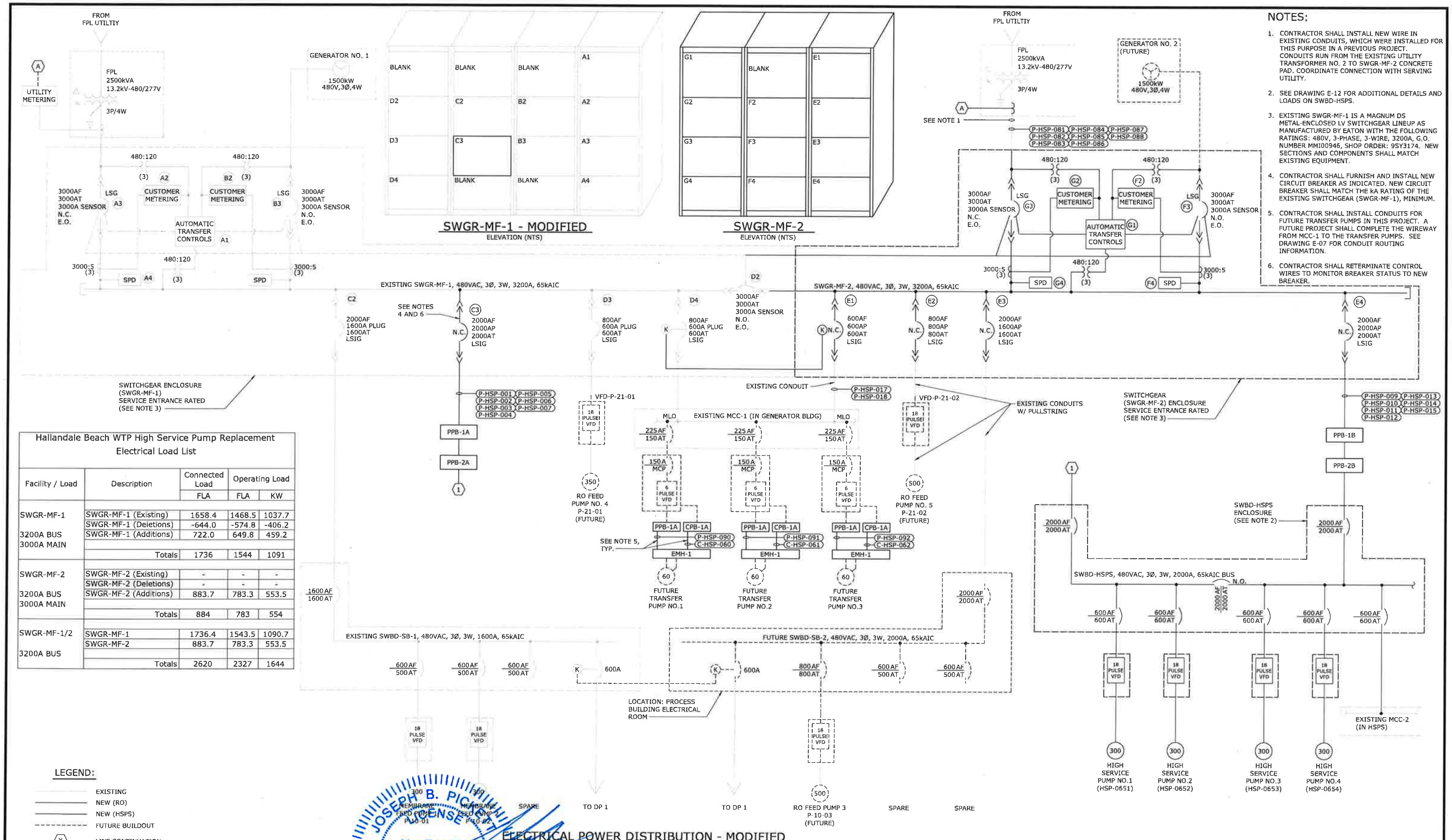

NOTES:

1. CONTRACTOR SHALL INSTALL NEW WIRE IN EXISTING CONDUITS, WHICH WERE INSTALLED FOR THIS PURPOSE IN A PREVIOUS PROJECT. CONDUITS RUN FROM THE EXISTING UTILITY TRANSFORMER NO. 2 TO SWGR-MF-2 CONCRETE PAD. COORDINATE CONNECTION WITH SERVING UTILITY.
2. SEE DRAWING E-12 FOR ADDITIONAL DETAILS AND LOADS ON SWBD-HSPS.
3. EXISTING SWGR-MF-1 IS A MAGNUM DS METAL-ENCLOSED LV SWITCHGEAR LINEUP AS MANUFACTURED BY EATON WITH THE FOLLOWING RATINGS: 480V, 3-PHASE, 3-WIRE, 3200A, G.O. NUMBER MM100946, SHOP ORDER: 9SY3174. NEW SECTIONS AND COMPONENTS SHALL MATCH EXISTING EQUIPMENT.
4. CONTRACTOR SHALL FURNISH AND INSTALL NEW CIRCUIT BREAKER AS INDICATED. NEW CIRCUIT BREAKER SHALL MATCH THE kA RATING OF THE EXISTING SWITCHGEAR (SWGR-MF-1), MINIMUM.
5. CONTRACTOR SHALL INSTALL CONDUITS FOR FUTURE TRANSFER PUMPS IN THIS PROJECT. A FUTURE PROJECT SHALL COMPLETE THE WIREWAY FROM MCC-1 TO THE TRANSFER PUMPS. SEE DRAWING E-07 FOR CONDUIT ROUTING INFORMATION.
6. CONTRACTOR SHALL RETERMINATE CONTROL WIRES TO MONITOR BREAKER STATUS TO NEW BREAKER.

Hallandale Beach WTP High Service Pump Replacement Electrical Load List

Facility / Load	Description	Connected Load FLA	Operating Load FLA	Operating Load KW
SWGR-MF-1	SWGR-MF-1 (Existing)	1658.4	1468.5	1037.7
	SWGR-MF-1 (Deletions)	-644.0	-574.8	-406.2
3200A BUS 3000A MAIN	SWGR-MF-1 (Additions)	722.0	649.8	459.2
	Totals	1736	1544	1091
SWGR-MF-2	SWGR-MF-2 (Existing)	-	-	-
	SWGR-MF-2 (Deletions)	-	-	-
3200A BUS 3000A MAIN	SWGR-MF-2 (Additions)	883.7	783.3	553.5
	Totals	884	783	554
SWGR-MF-1/2	SWGR-MF-1	1736.4	1543.5	1090.7
	SWGR-MF-2	883.7	783.3	553.5
3200A BUS				
	Totals	2620	2327	1644

LEGEND:

- EXISTING
- NEW (RO)
- NEW (HSPS)
- FUTURE BUILDOUT
- (X) LINE CONTINUATION

REV	ISSUED FOR	DATE	BY
1	BID SET	08-06-18	G.B.

PROJECT ENGINEER:
DESIGNED BY: P. BOWLES
DRAWN BY: T. RAHLAN
CHECKED BY: B. PICKETT
IF THIS BAR DOES NOT MEASURE 1" THEN DRAWING IS NOT TO FULL SCALE 0 1/2" 1"

JOSEPH B. PICKETT LICENSE No. 74106 STATE OF FLORIDA PROFESSIONAL ENGINEER 8/7/18
J. BRAD PICKETT, PE NO. 74106

Hazen
HAZEN AND SAWYER
4000 HOLLYWOOD BOULEVARD, SUITE 750N
HOLLYWOOD, FLORIDA 33021
CERTIFICATE OF AUTHORIZATION NO. : 2771

CITY OF HALLANDALE BEACH
WATER TREATMENT PLANT
HIGH SERVICE PUMP REPLACEMENT

Hallandale Beach

ELECTRICAL
OVERALL PLANT SINGLE LINE DIAGRAM - MODIFIED

DATE: AUGUST 2018
HAZEN NO.: 40621-000
CONTRACT NO.: 1
DRAWING NUMBER: E-04

File: C:\BMS\HAZEN-PW\DMS40276\E-04 Saved By: JOHNSON Save Date: 2018/08/06 10:29 AM
PLOT DATE: 08/08/18 10:25:33 AM BY: JOHNSON

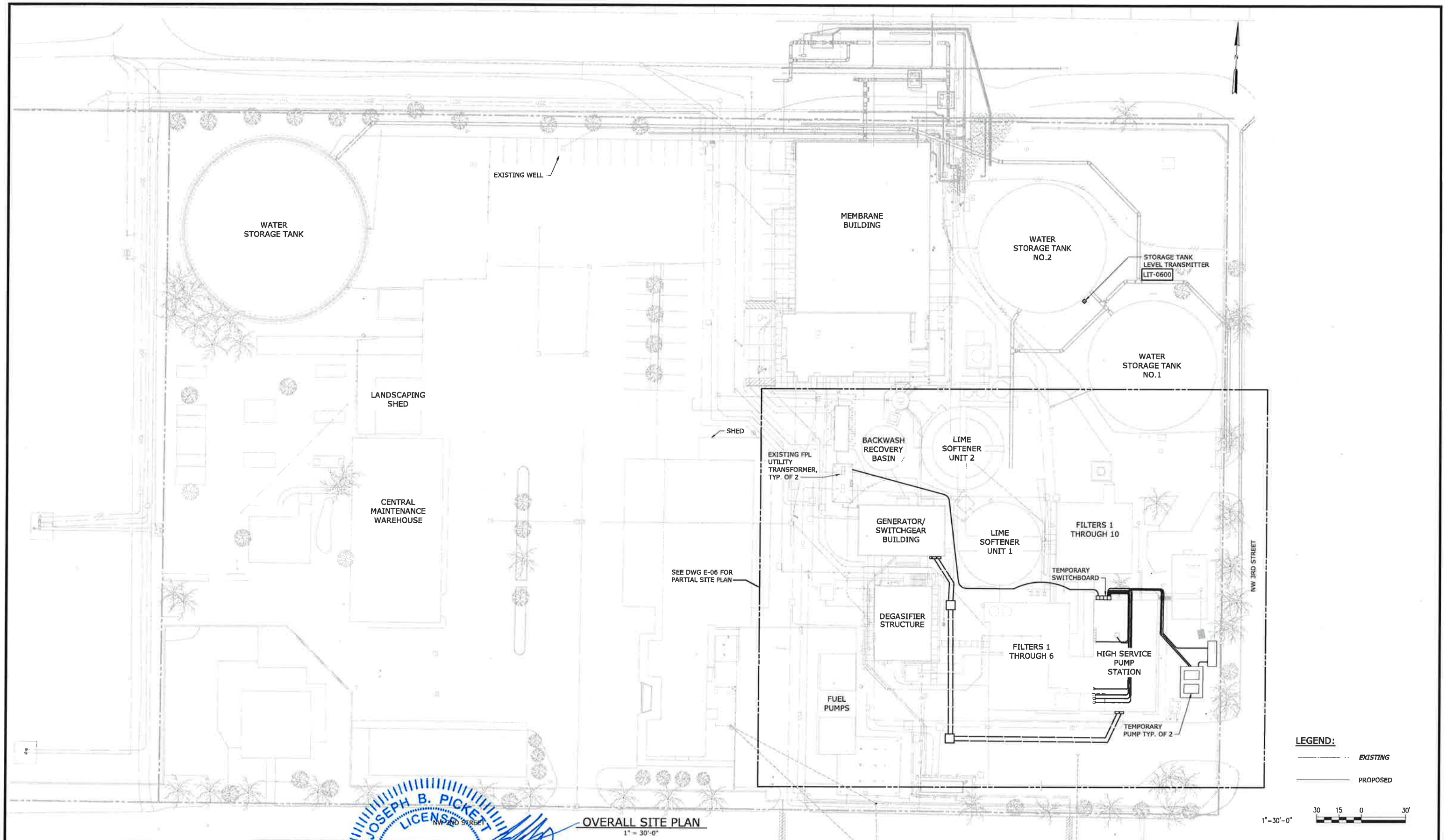

OVERALL SITE PLAN
1" = 30'-0"

REV	ISSUED FOR	DATE	BY
1	BID SET	08-06-18	G.B.

PROJECT ENGINEER:
DESIGNED BY: P. BOWLES
DRAWN BY: T. RAHLAN
CHECKED BY: B. PICKETT
IF THIS BAR DOES NOT MEASURE 1" THEN DRAWING IS NOT TO FULL SCALE 0 1/2" 1"

JOSEPH B. PICKETT LICENSED No. 74106 STATE OF FLORIDA PROFESSIONAL ENGINEER
8/7/18
J. BRAD PICKETT P.E. NO. 74106

Hazen
HAZEN AND SAWYER
4000 HOLLYWOOD BOULEVARD, SUITE 750N
HOLLYWOOD, FLORIDA 33021
CERTIFICATE OF AUTHORIZATION NO. : 2771

CITY OF HALLANDALE BEACH

WATER TREATMENT PLANT
HIGH SERVICE PUMP REPLACEMENT

Hallandale Beach

ELECTRICAL
OVERALL SITE PLAN

DATE:	AUGUST 2018
HAZEN NO.:	40621-000
CONTRACT NO.:	1
DRAWING NUMBER:	E-05

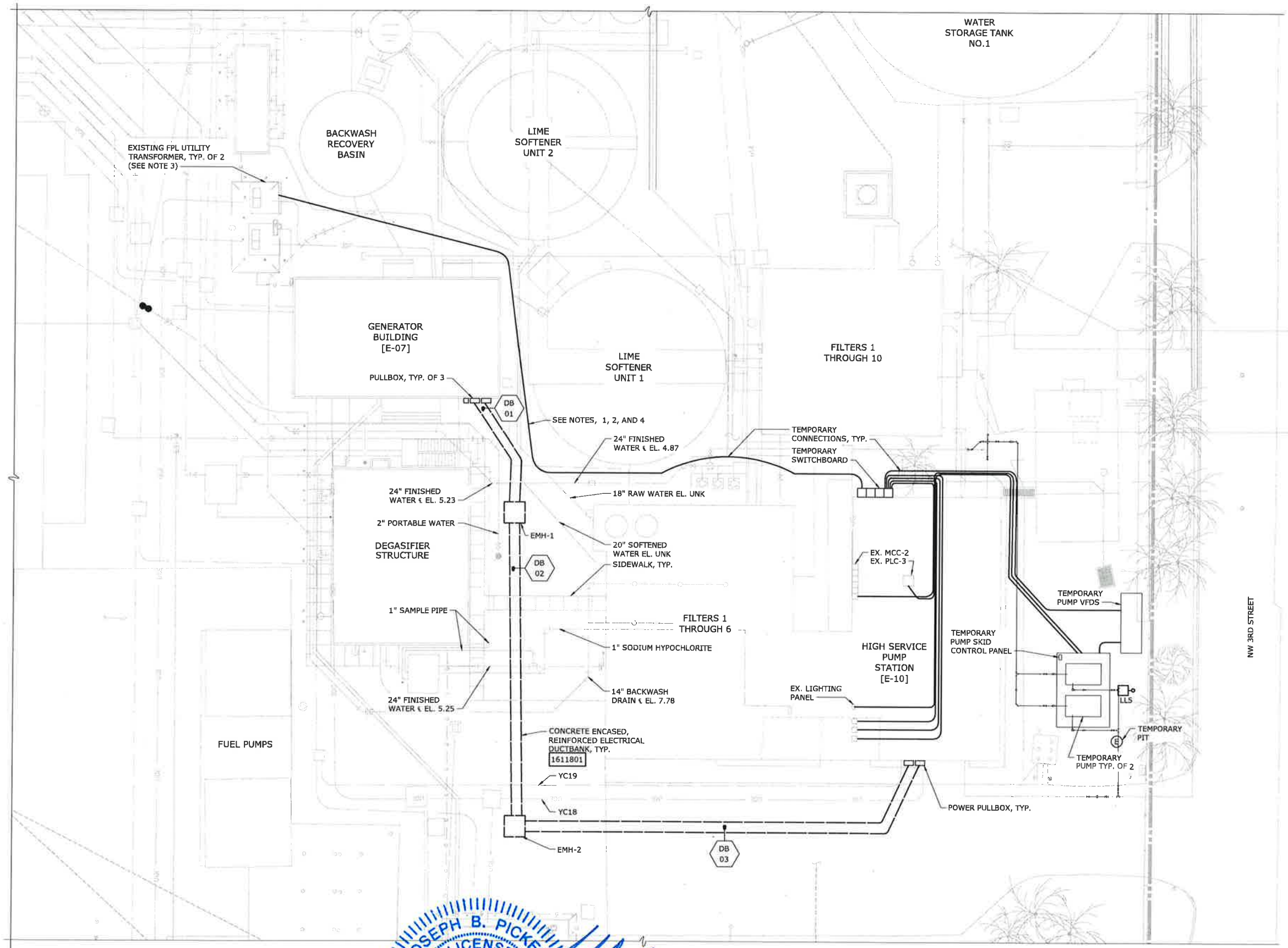

PARTIAL SITE PLAN
1" = 15'-0"

NOTES:

1. COORDINATE EXACT ROUTE OF TEMPORARY CONDUCTORS WITH THE CITY. SEE DRAWING E-10 FOR FURTHER DETAILS. PROVIDE STEP OVER DEVICES AS REQUESTED BY THE CITY IN HIGH TRAFFIC AREAS.
2. CONTRACTOR SHALL INSTALL TEMPORARY FEEDER CABLES FROM EXISTING UTILITY TRANSFORMER TO THE MAIN BREAKER OF THE TEMPORARY SWITCHBOARD IN PVC SCH 40 CONDUIT, NEATLY ARRANGED ON THE GROUND, CONNECTED TO THE BACK OF THE TRANSFORMER SPADES ON THE SUPPLY SIDE, AND TO THE LINE SIDE OF THE TEMPORARY SWITCHBOARD ON THE LOAD SIDE. SIZE/QUANTITY OF CABLES SHALL BE AS INDICATED.
3. COORDINATE ALL TEMPORARY CONNECTIONS TO ELECTRICAL UTILITY TRANSFORMER WITH SERVING ELECTRICAL UTILITY.
4. CONTRACTOR SHALL ADEQUATELY TEST ALL TEMPORARY FEEDER CABLES AND PROVE THEY ARE IN SATISFACTORY CONDITION PRIOR TO USE. CONTRACTOR REQUIRED TO OBTAIN ENGINEER'S APPROVAL OF TEST RESULTS BEFORE ENERGIZING.
5. UNDERGROUND UTILITIES SHOWN ARE TAKEN FROM EXISTING RECORDS AND ARE SHOWN FOR THE CONVENIENCE OF THE CONTRACTOR ONLY.
6. THE CONTRACTOR SHALL ACCURATELY LOCATE AND UNCOVER ALL EXISTING UTILITIES BEFORE BEGINNING CONSTRUCTION. ANY DAMAGE RESULTING FROM THE CONTRACTOR'S OPERATIONS SHALL BE REPAIRED AT THE CONTRACTOR'S EXPENSE.
7. LIGHTING FIXTURE LLS SHALL BE MOUNTED AT A HEIGHT OF 10'-0" ABOVE GRADE.

LEGEND:

YCX : YARD CONDUIT FROM RECORD DRAWINGS FOR 6 MGD MEMBRANE SOFTENING WTP.

REV	ISSUED FOR	DATE	BY
1	BID SET	08-06-18	G.B.

PROJECT ENGINEER:
DESIGNED BY: P. BOWLES
DRAWN BY: T. RAHLAN
CHECKED BY: B. PICKETT

IF THIS BAR DOES NOT MEASURE 1" THEN DRAWING IS NOT TO FULL SCALE (0 1/2" 1")

JOSEPH B. PICKETT LICENSE No. 74106 STATE OF FLORIDA PROFESSIONAL ENGINEER
8/7/18
J. BRAD PICKETT, PE No. 74106

Hazen
HAZEN AND SAWYER
4000 HOLLYWOOD BOULEVARD, SUITE 750N
HOLLYWOOD, FLORIDA 33021
CERTIFICATE OF AUTHORIZATION NO. : 2771

CITY OF HALLANDALE BEACH

WATER TREATMENT PLANT
HIGH SERVICE PUMP REPLACEMENT

Hallandale Beach

ELECTRICAL
PARTIAL SITE PLAN

DATE: AUGUST 2018
HAZEN NO.: 40621-000
CONTRACT NO.: 1
DRAWING NUMBER: E-06

File: C:\BRTV\AZN-PW\34842\E-06 Saved By JOHNSON Save Date: 2018/08/06 10:11 AM
PLOT DATE: 2018/08/06 10:24:49 AM BY: JOHNSON

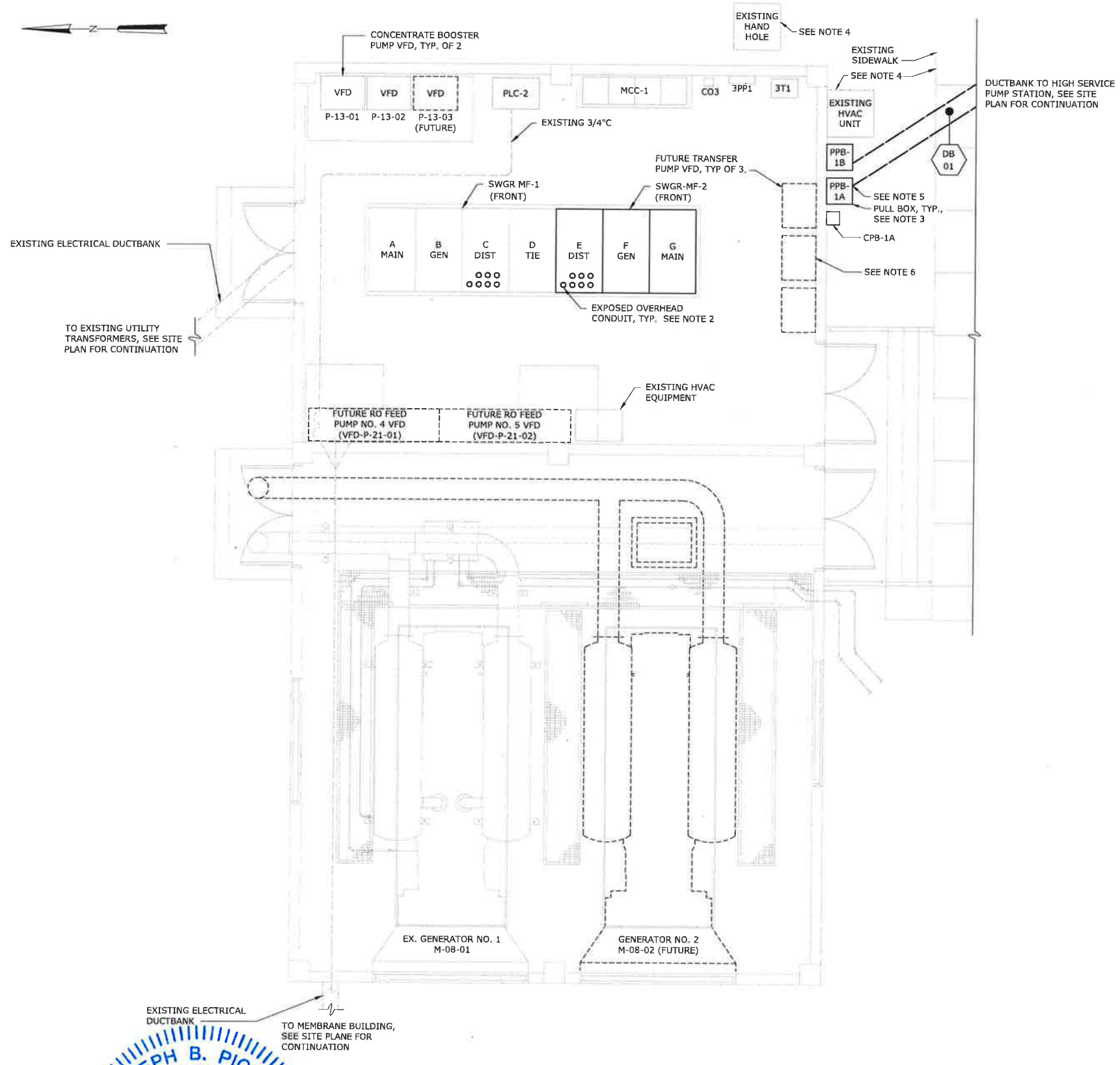

GENERATOR BUILDING - PLAN
1/4" = 1'-0"

NOTES:

1. GENERATOR BUILDING IS DESIGNATED AS A DRY NON-PROCESS AREA.
2. CONDUIT LEAVING SWGR-MF-1/2 FOR THE HSPS SHALL BE ROUTED OUT OF THE TOP OF THE SWITCHGEAR ENCLOSURES USING AN EXPOSED RACEWAY. CONDUITS SHALL BE ROUTED OVERHEAD TO THE SOUTH WALL, TERMINATING IN THE POWER PULL BOXES ON THE EXTERIOR OF THE WALL AS SHOWN. WALL PENETRATIONS SHALL BE AS SHOWN IN STANDARD DETAIL 1611102 OR AS SPECIFIED WITHIN 16111. THE WALKWAY AROUND THE SWITCHGEAR SHALL REMAIN UNOBSTRUCTED.
3. POWER AND CONTROL PULL BOXES SHALL BE MOUNTED ON EXTERIOR WALL. FROM PULLBOXES, ROUTE EXPOSED CONDUIT DOWNWARD ALONG EXTERIOR WALL AND TRANSITION INTO DUCTBANK CONSTRUCTION, PER STANDARD DETAIL 1611811. CONTRACTOR SHALL FURNISH AND INSTALL CONDUIT FITTINGS AND/OR PULLBOXES AS REQUIRED FOR A COMPLETE RACEWAY SYSTEM.
4. FIELD VERIFY LOCATION OF HVAC UNIT, HAND HOLE, AND SIDEWALK.
5. CONTROL CONDUITS INSTALLED IN THIS PROJECT FOR FUTURE TRANSFER PUMPS SHALL BEGIN AT CPB-1A AND TERMINATE AT EMH-1. SEE SITE PLAN FOR DETAILS.
6. NEW CONDUITS INSTALLED AS PART OF THIS PROJECT SHALL NOT PASS ABOVE AREA DESIGNATED FOR FUTURE TRANSFER PUMP VFDS. IF CONFLICT IS NOT AVOIDABLE, INSTALLATION SHALL MEET DEDICATED AND WORKING SPACE REQUIREMENTS OF THE NEC 110.26.

LEGEND:

- EXISTING
- PROPOSED
- FUTURE
- CONCRETE ENCASED CONDUIT

1/4"=1'-0" 1 0 1 2 3 7'

REV	ISSUED FOR	DATE	BY
1	BID SET	08-06-18	G.B.

PROJECT ENGINEER:
DESIGNED BY: P. BOWLES
DRAWN BY: T. RAHLAN
CHECKED BY: B. PICKETT
IF THIS BAR DOES NOT MEASURE 1" THEN DRAWING IS NOT TO FULL SCALE 0 1/2" 1"

JOSEPH B. PICKETT LICENSE No. 74106 STATE OF FLORIDA PROFESSIONAL ENGINEER 8/7/18
J. BRAD PICKETT, P.E. No. 74106

Hazen
HAZEN AND SAWYER
4000 HOLLYWOOD BOULEVARD, SUITE 750N
HOLLYWOOD, FLORIDA 33021
CERTIFICATE OF AUTHORIZATION NO. : 2771

CITY OF HALLANDALE BEACH
WATER TREATMENT PLANT
HIGH SERVICE PUMP REPLACEMENT

Hallandale Beach

ELECTRICAL
GENERATOR BUILDING - PLAN

DATE: AUGUST 2018
HAZEN NO.: 40621-000
CONTRACT NO.: 1
DRAWING NUMBER: E-07

BID SET

File: C:\Bnd\HAZEN-PW\DGN\E2701.E-07 Saved By: JOHNSON Save Date: 2018/08/06 10:12 AM
PLOT DATE: 2018/08/06 10:25:54 AM BY: JOHNSON

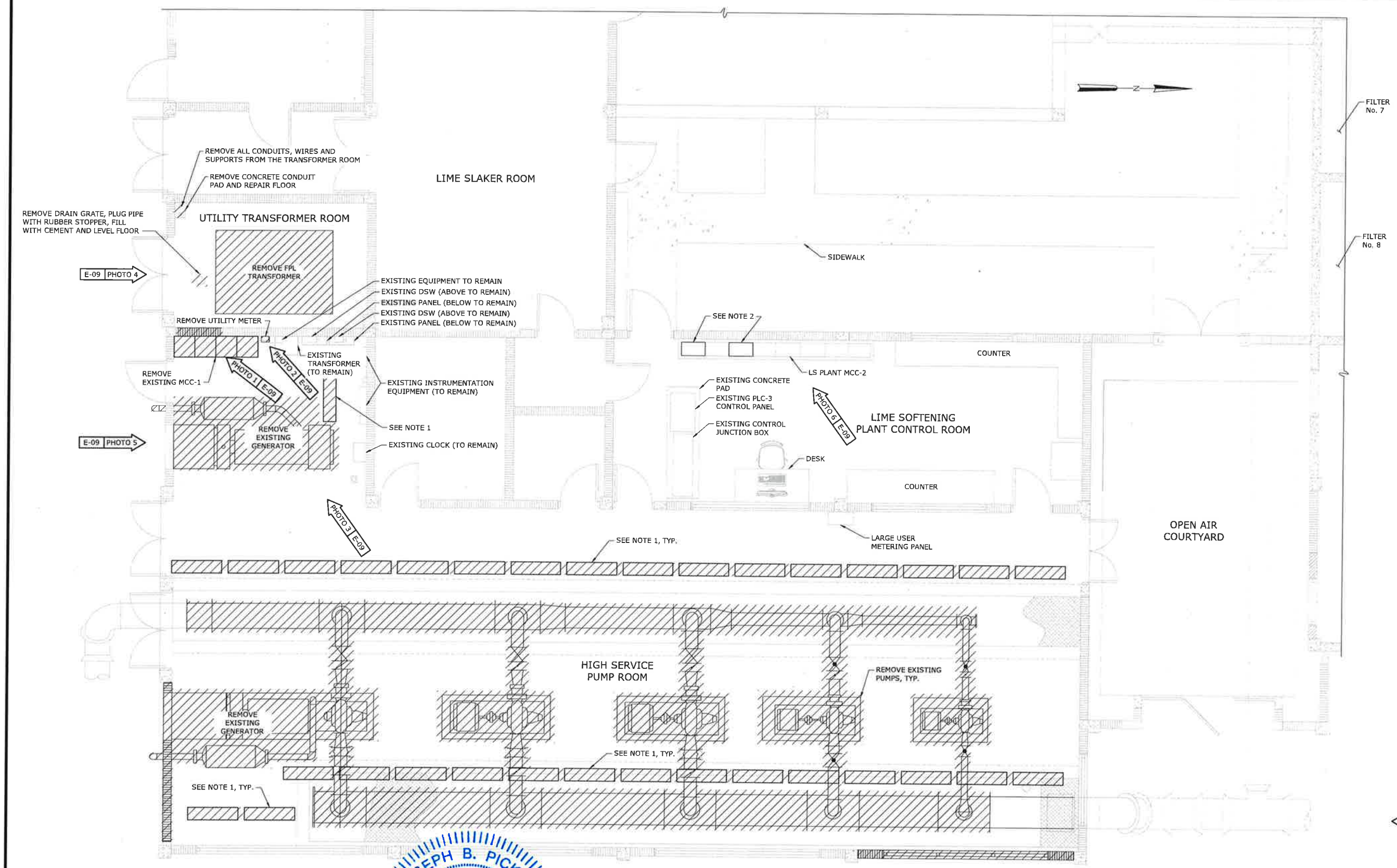

NOTES:

1. CONTRACTOR SHALL REMOVE EXISTING LIGHTING AND ASSOCIATED CONDUIT AND WIRE COMPLETELY FROM SOURCE TO LOAD. NEW LIGHTING TO BE INSTALLED AND SHALL BE SUPPLIED FROM LIGHTING PANEL MPZ-1. SEE DRAWINGS E-11 AND E-13 FOR FURTHER DETAILS.
2. CONTRACTOR SHALL DEMOLISH EXISTING STARTERS, AND ASSOCIATED CONDUIT AND WIRE WITHIN EXISTING LS PLANT MCC-2 AS INDICATED ON DRAWING E-03. RETURN STARTERS TO THE OWNER.
3. CONTRACTOR SHALL DEMOLISH AND RETURN TO OWNER ALL ELECTRICAL EQUIPMENT WITHIN THE HIGH SERVICE PUMP ROOM. THIS EQUIPMENT INCLUDES, BUT IS NOT LIMITED TO DISCONNECT SWITCHES, MISCELLANEOUS ELECTRICAL, AND INSTRUMENTATION EQUIPMENT. ALL EXPOSED CONDUIT SHALL BE REMOVED AND CUT FLUSH WITH GRADE. ALL WIRE SHALL BE REMOVED COMPLETELY FROM SOURCE TO LOAD. ALL DEMOLITION WORK SHALL BE IN ACCORDANCE WITH SPECIFICATION SECTION 01520 - SEQUENCE OF CONSTRUCTION.
4. ABANDONED FPL UTILITY EQUIPMENT SHALL BE REMOVED BY THE CONTRACTOR. CONTRACTOR TO COORDINATE DETAILS OF REMOVAL WITH FPL.

LEGEND:

	EXISTING
PHOTO # DWG	ARROW INDICATES DIRECTION AND POINT OF VIEW OF PHOTO
	TO BE REMOVED

HIGH SERVICE PUMP ROOM - DEMOLITION PLAN

1/4" = 1'-0"

1/4"=1'-0"

JOSEPH B. PICKETT LICENSE No. 74106 STATE OF FLORIDA PROFESSIONAL ENGINEER 8/7/18

J. BRAD PICKETT, PE NO. 74106

REV	ISSUED FOR	DATE	BY
1	BID SET	08-06-18	G.B.

PROJECT ENGINEER:	
DESIGNED BY:	P. BOWLES
DRAWN BY:	T. RAHLAN
CHECKED BY:	B. PICKETT

IF THIS BAR DOES NOT MEASURE 1" THEN DRAWING IS NOT TO FULL SCALE 0 1/2" 1"

Hazen

HAZEN AND SAWYER
4000 HOLLYWOOD BOULEVARD, SUITE 750N
HOLLYWOOD, FLORIDA 33021
CERTIFICATE OF AUTHORIZATION NO. : 2771

CITY OF HALLANDALE BEACH

WATER TREATMENT PLANT
HIGH SERVICE PUMP REPLACEMENT

Hallandale Beach

ELECTRICAL
HIGH SERVICE PUMP
ROOM - DEMOLITION PLAN

DATE:	AUGUST 2018
HAZEN NO.:	40621-000
CONTRACT NO.:	1
DRAWING NUMBER:	E-08

File: C:\SHARE\HAZEN-PW\DMS40231\E-08 Saved By: JOHNSON Save Date: 2018/09/06 10:12 AM
PLOT DATE: 2018/08/06 10:25:54 AM BY: JOHNSON

NOTES:

1. REPLACE DOORS WITH EQUIVALENT DOOR TO MAINTAIN THE RATING OF THE ENCLOSURE.
2. CONTRACTOR SHALL INCLUDE DEMOLITION OF AN ADDITIONAL 500 FT. OF EXISTING CONDUIT AND ASSOCIATED WIRE IN BID. DURING DEMOLITION, COORDINATE REMOVAL OF SPECIFIC CONDUIT AND WIRE WITH FIELD ENGINEER.

PHOTO 1 - MCC-1

PHOTO 2 - MCC-1 AND UTILITY METER

PHOTO 3 - GENERATOR

PHOTO 4 - UTILITY TRANSFORMER

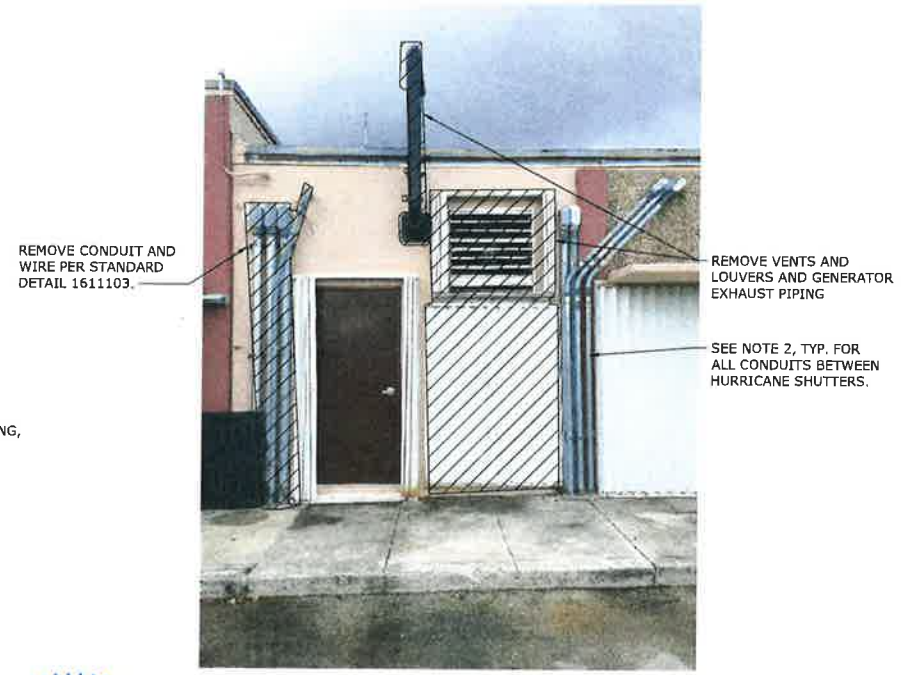

PHOTO 5 - CONDUIT

PHOTO 6 - MCC-2

LEGEND:

TO BE REMOVED

REV	ISSUED FOR	DATE	BY
1	BID SET	08-06-18	G.B.

PROJECT ENGINEER:
DESIGNED BY: P. BOWLES
DRAWN BY: T. RAHLAN
CHECKED BY: B. PICKETT
IF THIS BAR DOES NOT MEASURE 1" THEN DRAWING IS NOT TO FULL SCALE 0 1/2" 1"

JOSEPH B. PICKETT LICENSE No. 74106 STATE OF FLORIDA PROFESSIONAL ENGINEER
8/7/18
J. BRAD PICKETT, PE No. 74106

Hazen
HAZEN AND SAWYER
4000 HOLLYWOOD BOULEVARD, SUITE 750N
HOLLYWOOD, FLORIDA 33021
CERTIFICATE OF AUTHORIZATION NO. : 2771

CITY OF HALLANDALE BEACH

WATER TREATMENT PLANT
HIGH SERVICE PUMP REPLACEMENT

Hallandale Beach

ELECTRICAL
HIGH SERVICE PUMP ROOM
- DEMOLITION PHOTOS

DATE: AUGUST 2018
HAZEN NO.: 40621-000
CONTRACT NO.: 1
DRAWING NUMBER: E-09

File: C:\PWWS\KATZN-PW\PWS40279\C-05 Saved By: JJOHNSON Save Date: 2018/08/06 10:14 AM
PLOT DATE: 2018/08/06 10:26:12 AM By: JJOHNSON

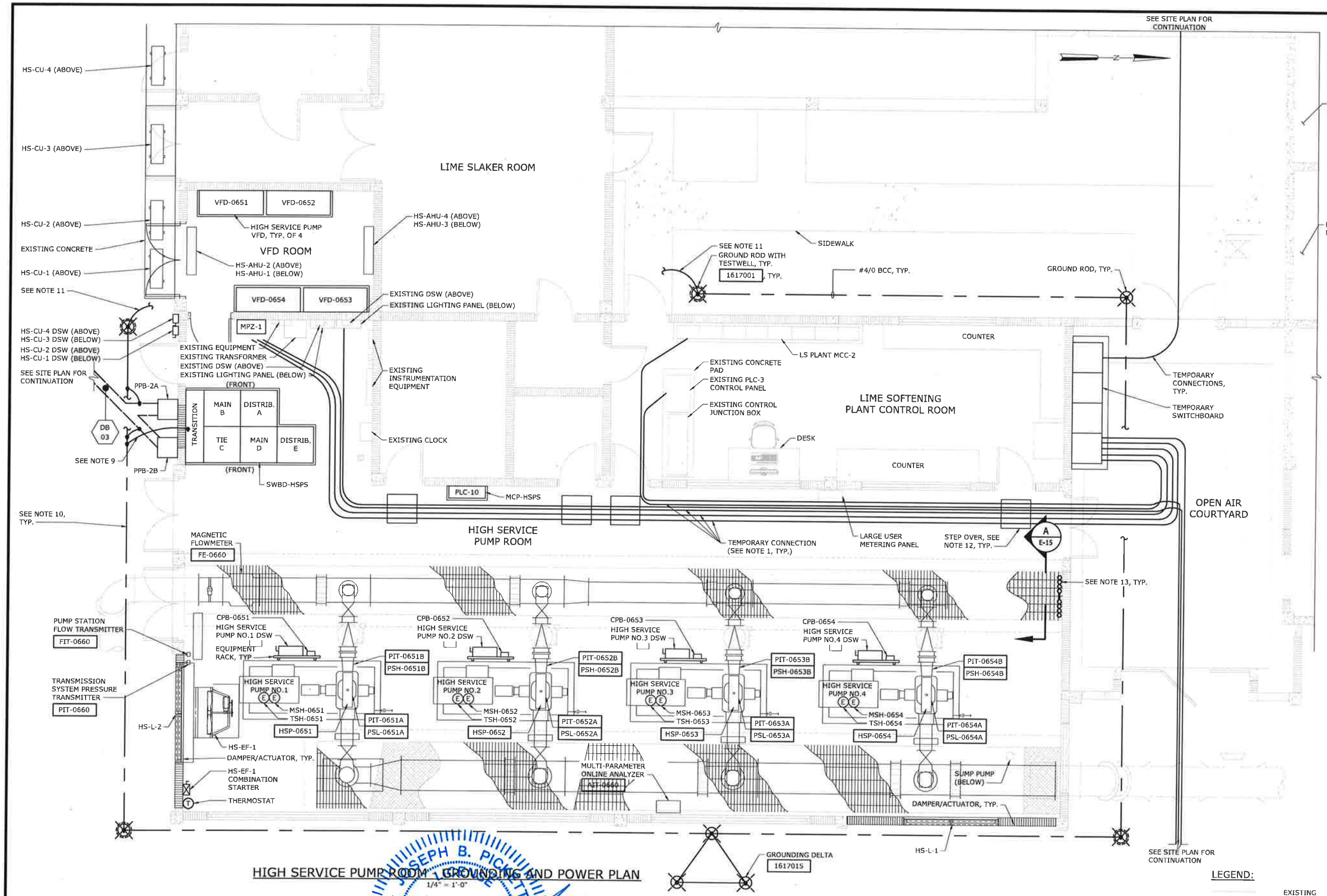

HIGH SERVICE PUMP ROOM - GROUNDING AND POWER PLAN

1/4" = 1'-0"

NOTES:

1. INTERCEPT EXISTING LOADS, SEE DRAWING E-03 FOR DETAILS.
2. PERMANENT CONDUITS SHALL BE ROUTED EXPOSED ON WALLS AND CEILING TO THE GREATEST EXTENT POSSIBLE.
3. SEE DRAWING E-11 FOR AREA DESIGNATIONS.
4. EACH DUCTBANK GROUND CONDUCTOR CROSSING THE GROUND LOOP SHALL BE EXOTHERMICALLY WELDED TO THE GROUND LOOP CONDUCTOR.
5. GROUND LOOP CONDUCTOR SHALL BE A #4/0 BARE COPPER WIRE 30 INCHES MINIMUM BELOW FINISHED GRADE. ALL GROUND CONDUCTORS TO EQUIPMENT OR STRUCTURAL STEEL SHALL BE BARE COPPER WIRE.
6. IF VERTICALLY DRIVEN GROUND RODS ENCOUNTER ROCK BEFORE BEING DRIVEN TO 10'-0" DEPTH, CONTRACTOR SHALL BE PERMITTED TO DRIVE ROD AT AN ANGLE, OR LAY IN ACCORDANCE WITH 2014 N.E.C ARTICLE 250.53(G).
7. CONTRACTOR SHALL FURNISH AND INSTALL LIGHTNING PROTECTION SYSTEM FOR THIS HIGH SERVICE PUMP STRUCTURE IN ACCORDANCE WITH SPECIFICATION SECTION 16670.
8. CONTRACTOR SHALL INSTALL GROUNDING SYSTEM AROUND HIGH SERVICE PUMP STRUCTURE AS SHOWN. CONFIRM DESIGN WITH ENGINEER PRIOR TO INSTALLATION. BOND LIGHTNING PROTECTION SYSTEM TO NEW GROUNDING SYSTEM.
9. THE GROUNDING ELECTRODE CONDUCTOR SHALL PENETRATE THE SOUTH HSPS WALL ABOVE GRADE THROUGH A 1" SCH40 PVC CONDUIT SLEEVE. WALKWAY AREA SHALL REMAIN OBSTRUCTION AND TRIPPING HAZARD FREE. VOID AREA BETWEEN CONDUCTOR AND CONDUIT WALL SHALL BE TIGHTLY CAULKED. GROUNDING ELECTRODE SHALL BE CONNECTED TO SWITCHBOARD IN ACCORDANCE WITH SPECIFICATION SECTION 16170.
10. THE AREAS SHOWN HERE FOR THE GROUNDING ELECTRODES ARE APPROXIMATIONS BASED ON AS-BUILT DRAWINGS. ALTHOUGH THESE AREAS HAVE BEEN CHOSEN CAREFULLY TO AVOID CONFLICTS WITH EXISTING UNDERGROUND OBJECTS, THE CONTRACTOR SHALL CAREFULLY PLAN AND STUDY THE EXACT LOCATION OF EACH ELECTRODE TO AVOID CONFLICTS WITH PIPING, CONDUITS, DUCTBANKS, ETC.
11. CONNECT TO EXISTING GROUNDING GRID.
12. COORDINATE EXACT ROUTE OF TEMPORARY CONDUCTORS WITH THE CITY. PROVIDE STEP OVER DEVICES AS REQUESTED BY CLIENT IN HIGH TRAFFIC AREAS.
13. ROUTE EXPOSED CONDUITS FROM THE VFD ENCLOSURES IN THE VFD ROOM TO THE LOCATION SHOWN ALONG THE CEILING. AT THE LOCATION SHOWN, THE CONDUITS SHALL TURN DOWN AND RUN ALONG THE PIPE TRENCH AS SHOWN IN THE SECTION VIEW. THE CONDUITS SHALL TURN UP THROUGH THE PIPE TRENCH GRATING AND BE ROUTED TO THE DSW AND CONTROL PULL BOX AS SHOWN ON THE RISER DIAGRAMS ON DRAWING E-12.

SCOPE OF WORK AT HSPS BUILDING:

1. INSTALL TEMPORARY SWITCHBOARD TO SUPPLY EXISTING LOADS AND TEMPORARY PUMPS WHILE MCC-1 IS REMOVED.
2. REMOVE MCC-1.
3. REMOVE UTILITY TRANSFORMER AND GENERATOR, WHICH ARE NO LONGER IN USE.
4. INSTALL NEW SWITCHBOARD SWBD-HSPS, SUPPLYING FOUR NEW VFD STARTERS FOR HIGH SERVICE PUMPS.
5. INSTALL NEW AIR CONDITIONING SYSTEM IN VFD ROOM.
6. INSTALL NEW PLC-10 TO CONTROL NEW HIGH SERVICE PUMPS.

LEGEND:

EXISTING

PROPOSED

1/4"=1'-0" 1 0 1 2 3 7'

REV	ISSUED FOR	DATE	BY
1	BID SET	08-06-18	G.B.

PROJECT ENGINEER:

DESIGNED BY: P. BOWLES

DRAWN BY: T. RAHLAN

CHECKED BY: B. PICKETT

IF THIS BAR DOES NOT MEASURE 1" THEN DRAWING IS NOT TO FULL SCALE 0 1/2" 1"

JOSEPH B. PICKETT LICENSE No. 74106 STATE OF FLORIDA PROFESSIONAL ENGINEER 8/7/18

J. BRAD PICKETT, PE NO. 74106

Hazen

HAZEN AND SAWYER
4000 HOLLYWOOD BOULEVARD, SUITE 750N
HOLLYWOOD, FLORIDA 33021
CERTIFICATE OF AUTHORIZATION NO. : 2771

CITY OF HALLANDALE BEACH

WATER TREATMENT PLANT
HIGH SERVICE PUMP REPLACEMENT

Hallandale Beach

ELECTRICAL
HIGH SERVICE PUMP ROOM
- GROUNDING AND POWER PLAN

DATE: AUGUST 2018

HAZEN NO.: 40621-000

CONTRACT NO.: 1

DRAWING NUMBER: E-10

File: C:\DWS\HAZEN-PW\DMS40278\E-10 Saved by JOHNSON Save Date: 2018/08/06 10:14 AM
PLOT DATE: 2018/08/06 10:26:24 AM BY: JOHNSON

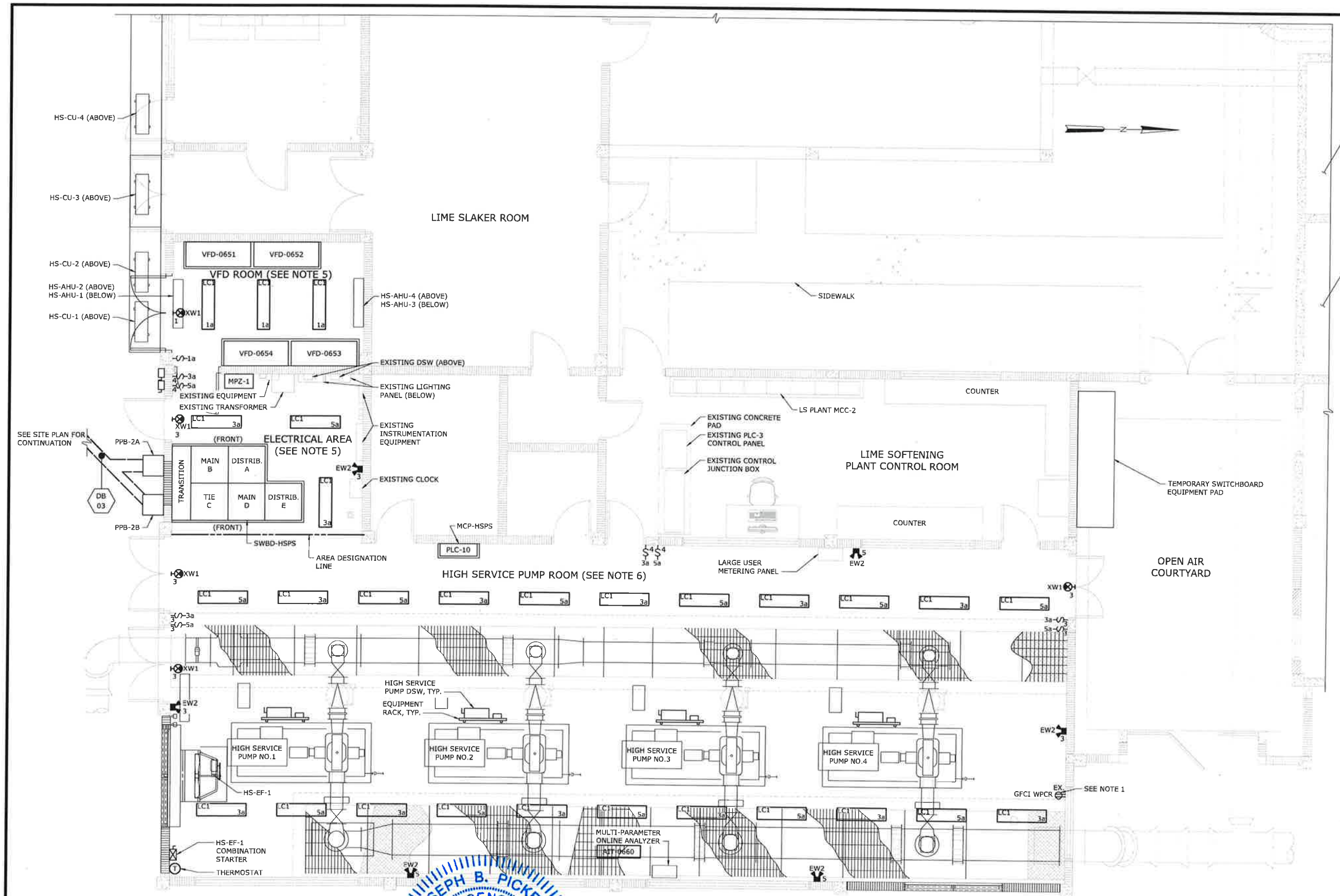

NOTES:

1. REPLACE EXISTING RECEPTACLE WITH NEW WHILE-IN-USE RECEPTACLE TO BE USED FOR THE NEW SUMP PUMP. USE EXISTING CIRCUIT WIRING FOR NEW RECEPTACLE.
2. MOUNT TYPE XW1 FIXTURE 12" ABOVE DOOR.
3. MOUNT TYPE LC1 FIXTURE AT 10'-0" AFF.
4. MOUNT ALL EW2 TYPE FIXTURES AT 10'-0" AFF.
5. VFD ROOM AND ELECTRICAL AREA DESIGNATED AS A DRY NON-PROCESS AREA.
6. HIGH SERVICE PUMP ROOM IS DESIGNATED AS A WET NON-CORROSIVE PROCESS AREA.
7. ALL MATERIALS OF CONSTRUCTION AND ENCLOSURE TYPES SHALL BE PROVIDED IN ACCORDANCE WITH THE DESIGNATION OF THE AREAS IN WHICH THEY ARE INSTALLED. REFERENCE THE AREA DESIGNATION TABLES IN THE APPROPRIATE DIVISION 16 SPECIFICATION SECTIONS.

HIGH SERVICE PUMP ROOM - LIGHTING PLAN AND DESIGNATION

1/4" = 1'-0"

LEGEND:

EXISTING

PROPOSED

1/4"=1'-0"

REV	ISSUED FOR	DATE	BY
1	BID SET	08-06-18	G.B.

PROJECT ENGINEER:

DESIGNED BY: P. BOWLES

DRAWN BY: T. RAHLAN

CHECKED BY: B. PICKETT

IF THIS BAR DOES NOT MEASURE 1" THEN DRAWING IS NOT TO FULL SCALE 0 1/2" 1"

JOSEPH B. PICKETT LICENSE No. 74106 STATE OF FLORIDA PROFESSIONAL ENGINEER 8/7/18

J. BRAD PICKETT, PE NO. 74106

Hazen

HAZEN AND SAWYER
4000 HOLLYWOOD BOULEVARD, SUITE 750N
HOLLYWOOD, FLORIDA 33021
CERTIFICATE OF AUTHORIZATION NO. : 2771

CITY OF HALLANDALE BEACH

WATER TREATMENT PLANT
HIGH SERVICE PUMP REPLACEMENT

Hallandale Beach

ELECTRICAL
HIGH SERVICE PUMP
ROOM - LIGHTING PLAN

DATE: AUGUST 2018

HAZEN NO.: 40621-000

CONTRACT NO.: 1

DRAWING NUMBER: E-11

File: C:\SWCS\WZDx-PW\DAS45376\C-11 Saved By: JJOHNSON Save Date: 2018/08/08 10:15 AM
PLOT DATE: 2018/08/08 10:28:34 AM BY: JJOHNSON

NOTES:

1. POINT OF COMMON COUPLING. ASSUME TIE CLOSED WITH OTHER MAIN OPEN FOR WORST CASE CALCULATIONS.

Hallandale Beach WTP High Service Pump Replacement
Electrical Load List

Facility / Load	Description	Connected Load FLA	Operating Load FLA	Operating Load KW
SWBD-HSPS-A	SWBD-HSPS-A (Existing)	-	-	-
	SWBD-HSPS-A (Deletions)	-	-	-
2000A BUS	SWBD-HSPS-A (Additions)	770.1	673.9	476.2
2000A MAIN				
	Totals	770	674	476
SWBD-HSPS-B	SWBD-HSPS-B (Existing)	-	-	-
	SWBD-HSPS-B (Deletions)	-	-	-
2000A BUS	SWBD-HSPS-B (Additions)	883.7	783.3	553.5
2000A MAIN				
	Totals	884	783	554
SWBD-HSPS-A/B	SWBD-HSPS-A	770.1	673.9	476.2
	SWBD-HSPS-B	883.7	783.3	553.5
2000A BUS				
	Totals	1654	1457	1030

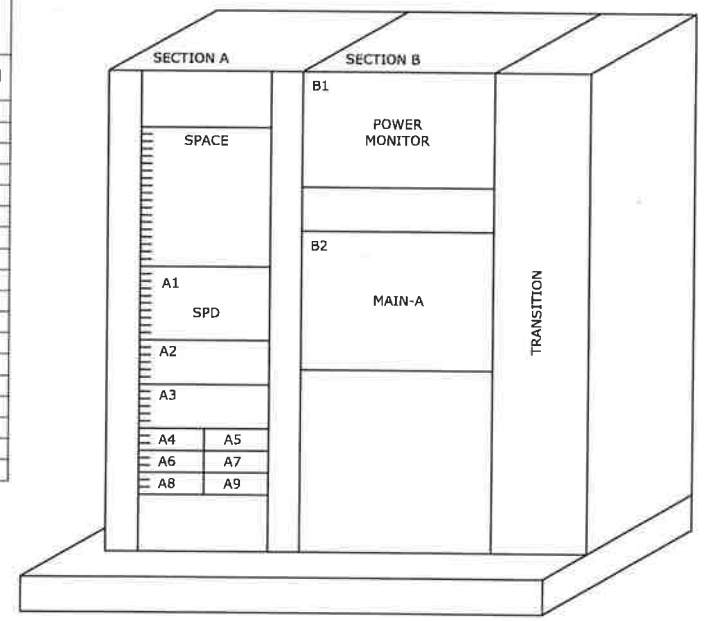

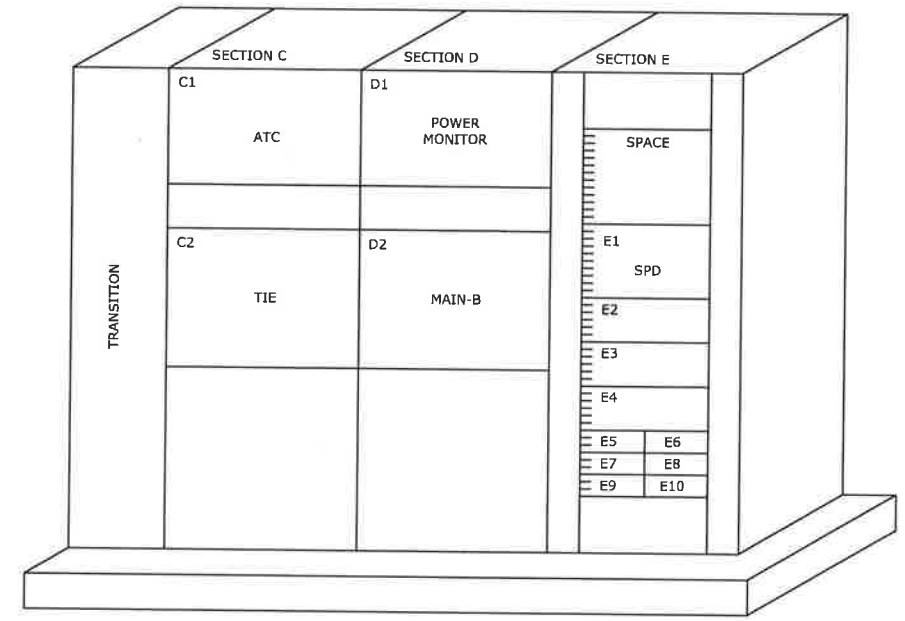

SWBD-HSPS
ELEVATION (NTS)

Hallandale Beach WTP High Service Pump Replacement
Short Circuit Calculation

Description	FLA	Short Circuit Contribution (A)	
2500kVA Transformer (5.51% Z)	3,007.03	54,574.10	
SWBD-HSPS-A Motor Loads	722.00	2,888.00	*
SWBD-HSPS-B Motor Loads	853.60	3,414.40	*
Total Short Circuit Current		60,876.50	

* For the motor short circuit contribution, ANSI Standard C37.010 uses 400% FLA.

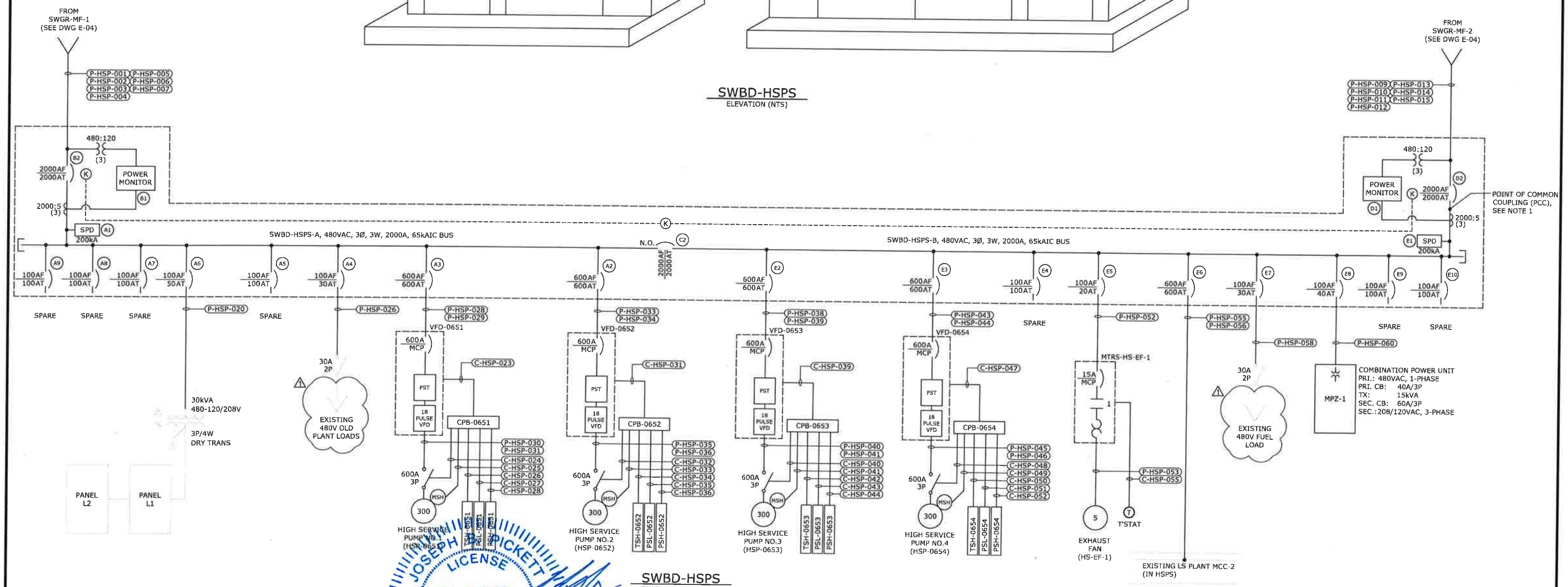

SWBD-HSPS
SINGLE LINE DIAGRAM

REV	ISSUED FOR	DATE	BY
2	BID SET	08-06-18	G.B.
1	BUILDING DEPT COMMENTS	4/2018	JBP

PROJECT ENGINEER:
DESIGNED BY: P. BOWLES
DRAWN BY: T. RAHLAN
CHECKED BY: B. PICKETT
IF THIS BAR DOES NOT MEASURE 1" THEN DRAWING IS NOT TO FULL SCALE 0 1/2" 1"

JOSEPH BRADLEY PICKETT LICENSE No. 74106 STATE OF FLORIDA PROFESSIONAL ENGINEER 8/7/18
J. BRAD PICKETT, PE NO. 74106

Hazen
HAZEN AND SAWYER
4000 HOLLYWOOD BOULEVARD, SUITE 750N
HOLLYWOOD, FLORIDA 33021
CERTIFICATE OF AUTHORIZATION NO. : 2771

CITY OF HALLANDALE BEACH
WATER TREATMENT PLANT
HIGH SERVICE PUMP REPLACEMENT

Hallandale Beach

ELECTRICAL
SWBD-HSPS SINGLE LINE DIAGRAM

DATE: AUGUST 2018
HAZEN NO.: 40621-000
CONTRACT NO.: 1
DRAWING NUMBER: E-12

File: C:\PWIDTH\ADM-PW\DMS40570\C-12 Saved By: JOHNSON Save Date: 2018/08/06 10:16 AM
PLOT DATE: 2018/08/06 10:51:15 AM BY: JOHNSON

RID SFFT

NOTES:

1. PROVIDE TEMPORARY CONNECTION(S) FROM PLC-3 TO THE TEMPORARY PUMP SKID CONTROL PANEL. USE ETHERNET CABLE IN PVC SCH 40 CONDUIT.
2. CONTRACTOR SHALL FURNISH AND INSTALL 2#12, #12GND IN 3/4"C UNLESS OTHERWISE NOTED.
3. COORDINATE TEMPORARY CONNECTIONS FOR TEMPORARY PUMPING SKID WITH MANUFACTURER. SEE DRAWING E-06 AND MECHANICAL DRAWINGS FOR LOCATIONS.
4. PROVIDE TEMPORARY CONNECTIONS FROM EXISTING LP-1 TO THE TEMPORARY PUMP SKID CONTROL PANEL AND LIGHTING. TEMPORARY CONDUCTORS SHALL BE 2#12, #12GND IN SCH 40 PVC CONDUIT.

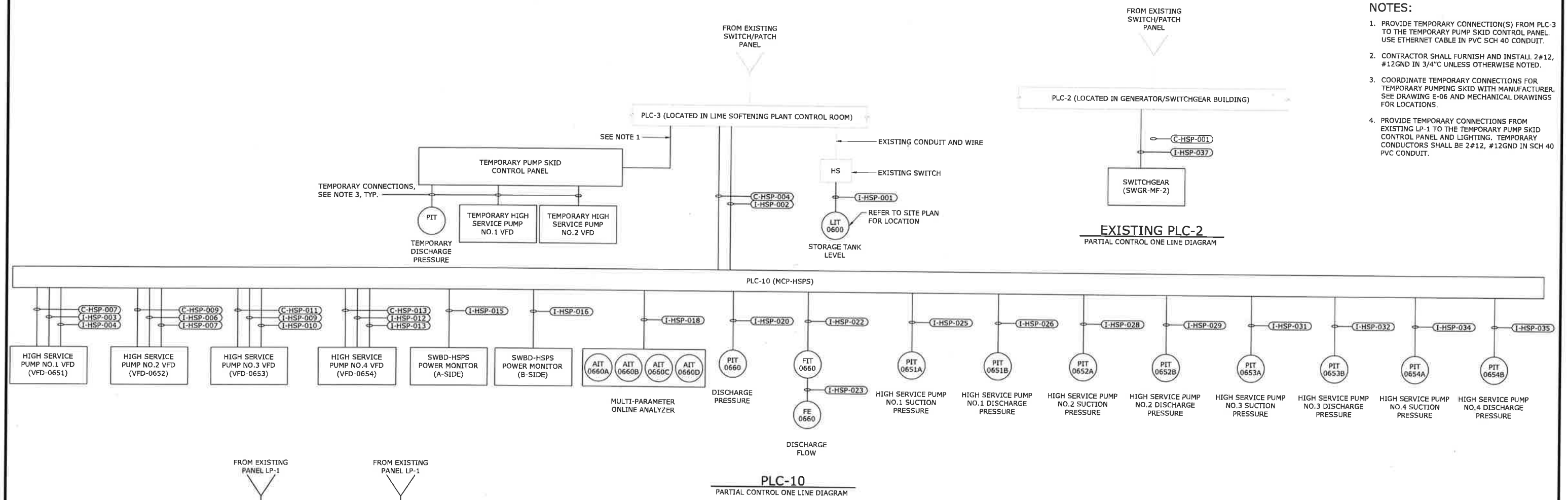

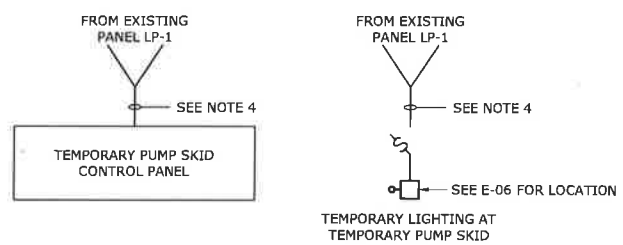

TEMPORARY 120V CONNECTIONS

RISER DIAGRAMS

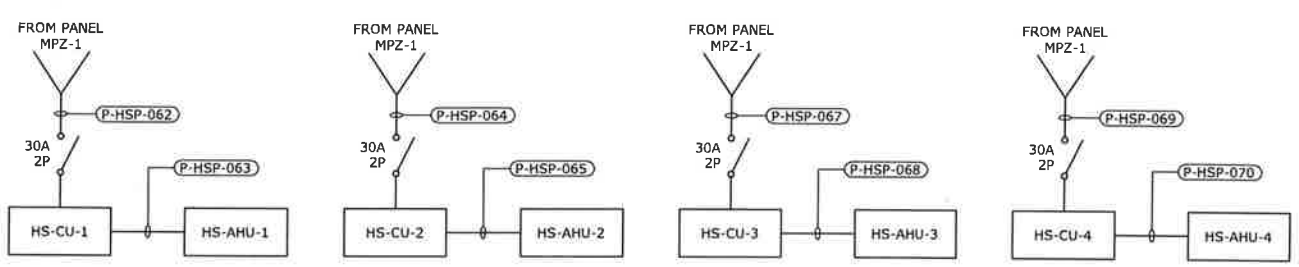

HVAC UNITS

RISER DIAGRAMS

208/120 VOLTS
3 PHASE, 4 WIRE

PANEL MPZ-1
40A PRIMARY MAIN BREAKER (480V)
60A SECONDARY MAIN BREAKER (208V)

TYPE: NEMA 12
MOUNT: SURFACE

MODS	DESCRIPTION	WIRE	TRIP	POLE	No.	VOLT-AMPERES A	VOLT-AMPERES B	VOLT-AMPERES C	VOLT-AMPERES A	VOLT-AMPERES B	VOLT-AMPERES C	No.	POLE	TRIP	WIRE	DESCRIPTION	MODS
-	LIGHTING-VFD ROOM	SEE NOTE 2	20	1	1	500			1,500			2	2	20	SEE RISER	HS-CU-3	-
-	LIGHTING-HIGH SERVICE PUMP RM	SEE NOTE 2	20	1	3		1,000			1,500		4					
-	LIGHTING-HIGH SERVICE PUMP RM	SEE NOTE 2	20	1	5			1,000			1,500	6	2	20	SEE RISER	HS-CU-4	-
-	AIT-0660	P-HSP-074	20	1	7	400			1,500			8					
-	HS-CU-1	SEE RISER	20	2	9		1,500			-		10	2	20		SPARE	-
					11			1,500			-	12					
-	HS-CU-2	SEE RISER	20	2	13	1,500			-			14	1	20		SPARE	-
					15		1,500			-		16	1	20		SPARE	-
-	SPARE		20	1	17			-			100	18	1	20	P-HSP-073	FIT-0060	-
-	SPARE		20	1	19	-			1,000			20	1	20	P-HSP-072	PLC-10 (MCP-HSPS)	-
-	SPARE		20	1	21		-			-		22	1	20		SPARE	-
-	SPARE		20	1	23			-			-	24	1	20		SPARE	-
					TOTAL	2,400	4,000	2,500	4,000	1,500	1,600	TOTAL					
						PHASE TOTAL			TOTAL LOAD (VA)								
						6,400	5,500	4,100	16,000								
									TOTAL LOAD (A)								
									44								

MODIFICATION (MODS) LEGEND:

EPD - GROUND FAULT CIRCUIT INTERRUPTER (30mA)
GFCI - GROUND FAULT CIRCUIT INTERRUPTER (5mA)
LOD - LOCK-ON DEVICE
LFD - LOCK-OFF DEVICE

NOTES:

10kAIC
15kVA COMBINATION POWER UNIT

JOSEPH B. PICKETT LICENSE No. 74106 STATE OF FLORIDA PROFESSIONAL ENGINEER
8/7/18
J. BRAD PICKETT, PE NO. 74106

REV	ISSUED FOR	DATE	BY
1	BID SET	08-06-18	G.B.

PROJECT ENGINEER:
DESIGNED BY: P. BOWLES
DRAWN BY: T. RAHLAN
CHECKED BY: B. PICKETT
IF THIS BAR DOES NOT MEASURE 1" THEN DRAWING IS NOT TO FULL SCALE 0 1/2" 1"

Hazen
HAZEN AND SAWYER
4000 HOLLYWOOD BOULEVARD, SUITE 750N
HOLLYWOOD, FLORIDA 33021
CERTIFICATE OF AUTHORIZATION NO. : 2771

CITY OF HALLANDALE BEACH

WATER TREATMENT PLANT
HIGH SERVICE PUMP REPLACEMENT

Hallandale Beach

ELECTRICAL
CONTROL ONE LINE DIAGRAM, RISER DIAGRAM, AND PANEL SCHEDULE

DATE: AUGUST 2018
HAZEN NO.: 40621-000
CONTRACT NO.: 1
DRAWING NUMBER: E-13

File: C:\SHEETS\ACTIVE-PROJECTS\40621\E-13 Saved By: JOHNSON Save Date: 2018/08/06 10:17 AM
PLOT DATE: 2018/08/06 10:26:44 AM BY: JOHNSON

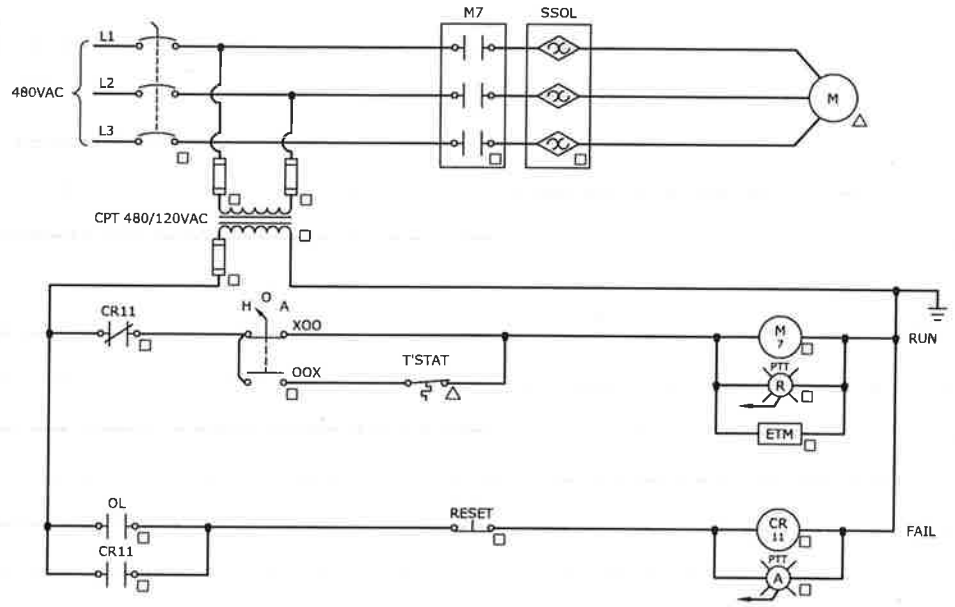

EXHAUST FAN (HS-EF-1)

ELEMENTARY CONTROL SCHEMATIC

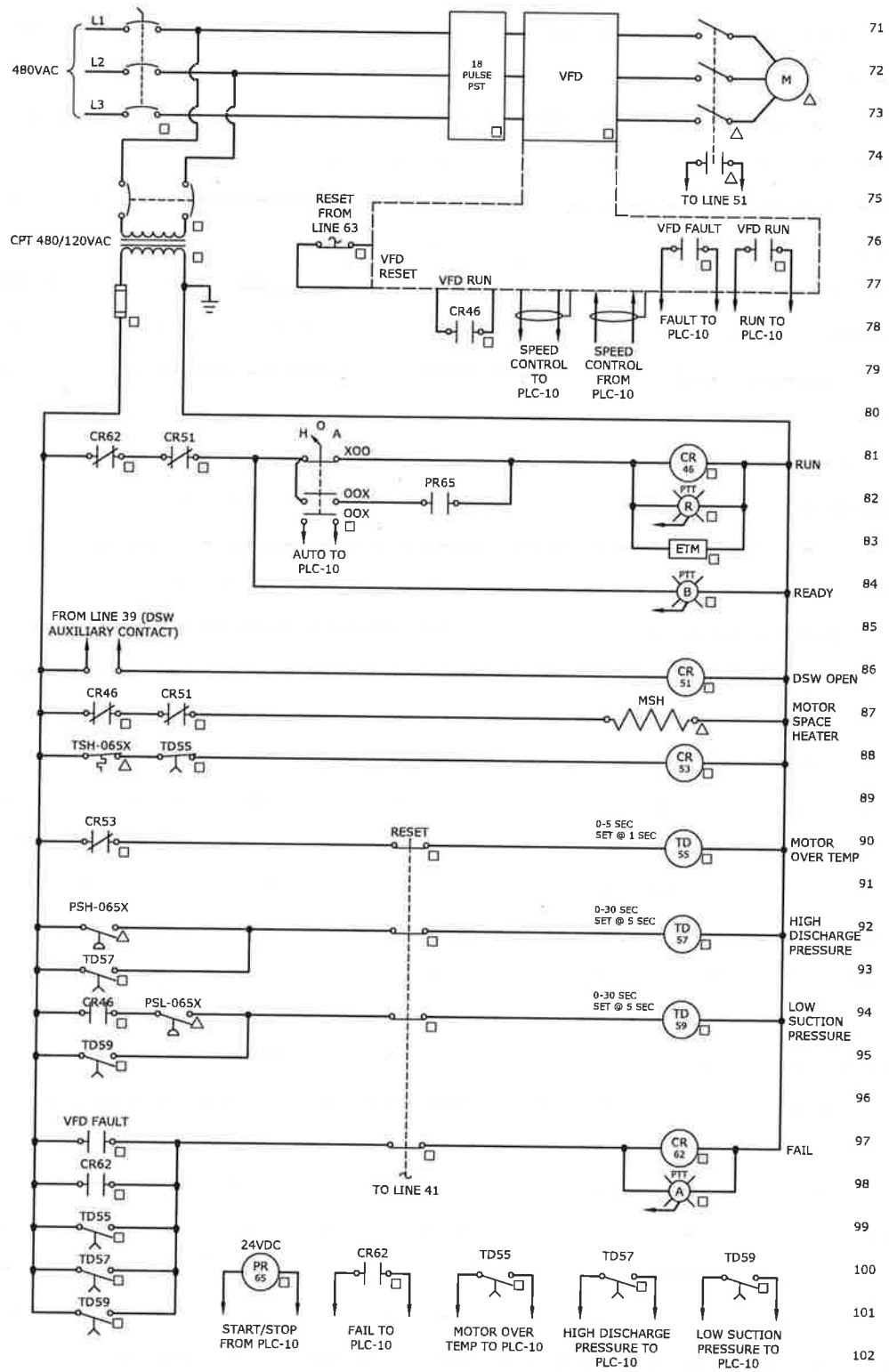

PUMP NO. X	TSH-065X	PSH-065X	PSL-065X	HS-065X
HSP-0651	TSH-0651	PSH-0651	PSL-0651	HS-0651
HSP-0652	TSH-0652	PSH-0652	PSL-0652	HS-0652
HSP-0653	TSH-0653	PSH-0653	PSL-0653	HS-0653
HSP-0654	TSH-0654	PSH-0654	PSL-0654	HS-0654

HIGH SERVICE PUMPS

ELEMENTARY CONTROL SCHEMATIC

HSP-0651, HSP-0652, HSP-0653, HSP-0654

REV	ISSUED FOR	DATE	BY
1	BID SET	08-06-18	G.B.

PROJECT ENGINEER:
DESIGNED BY: P. BOWLES
DRAWN BY: T. RAHLAN
CHECKED BY: B. PICKETT

IF THIS BAR DOES NOT MEASURE 1" THEN DRAWING IS NOT TO FULL SCALE (0 1/2" 1")

JOSEPH B. PICKETT LICENSE No. 74106 STATE OF FLORIDA PROFESSIONAL ENGINEER
8/7/18
J. BRAD PICKETT PE NO. 74106

Hazen
HAZEN AND SAWYER
4000 HOLLYWOOD BOULEVARD, SUITE 750N
HOLLYWOOD, FLORIDA 33021
CERTIFICATE OF AUTHORIZATION NO. : 2771

CITY OF HALLANDALE BEACH

WATER TREATMENT PLANT
HIGH SERVICE PUMP REPLACEMENT

Hallandale Beach

ELECTRICAL
ELEMENTARY CONTROL
SCHEMATICS

DATE: AUGUST 2018
HAZEN NO.: 40621-000
CONTRACT NO.: 1
DRAWING NUMBER: E-14

File: C:\BWS\W32To\PW\PW54837\V1-4 Saved By: JJOHNSON Save Date: 2018/08/06 10:18 AM
PLOT DATE: 2018/08/06 10:36:48 AM BY: JJOHNSON

CONDUIT NO.	SIZE	FROM	TO	CONDUCTORS	REMARKS
P-HSP-001	4"	EXISTING SWGR-MF-1	SWBD-HSPS	3#500kcmil, #250kcmilGND	
P-HSP-002	4"	EXISTING SWGR-MF-1	SWBD-HSPS	3#500kcmil, #250kcmilGND	
P-HSP-003	4"	EXISTING SWGR-MF-1	SWBD-HSPS	3#500kcmil, #250kcmilGND	
P-HSP-004	4"	EXISTING SWGR-MF-1	SWBD-HSPS	3#500kcmil, #250kcmilGND	
P-HSP-005	4"	EXISTING SWGR-MF-1	SWBD-HSPS	3#500kcmil, #250kcmilGND	
P-HSP-006	4"	EXISTING SWGR-MF-1	SWBD-HSPS	3#500kcmil, #250kcmilGND	
P-HSP-007	4"	EXISTING SWGR-MF-1	SWBD-HSPS	EMPTY W/ PULLSTRING	
P-HSP-008				NOT USED	
P-HSP-009	4"	SWGR-MF-2	SWBD-HSPS	3#500kcmil, #250kcmilGND	
P-HSP-010	4"	SWGR-MF-2	SWBD-HSPS	3#500kcmil, #250kcmilGND	
P-HSP-011	4"	SWGR-MF-2	SWBD-HSPS	3#500kcmil, #250kcmilGND	
P-HSP-012	4"	SWGR-MF-2	SWBD-HSPS	3#500kcmil, #250kcmilGND	
P-HSP-013	4"	SWGR-MF-2	SWBD-HSPS	3#500kcmil, #250kcmilGND	
P-HSP-014	4"	SWGR-MF-2	SWBD-HSPS	3#500kcmil, #250kcmilGND	
P-HSP-015	4"	SWGR-MF-2	SWBD-HSPS	EMPTY W/ PULLSTRING	
P-HSP-016				NOT USED	
P-HSP-017	EX. 3"	SWGR-MF-2	EXISTING MCC-1	3#500kcmil, #1GND	(GENERATOR BUILDING)
P-HSP-018	EX. 3"	SWGR-MF-2	EXISTING MCC-1	3#500kcmil, #1GND	(GENERATOR BUILDING)
P-HSP-019				NOT USED	
P-HSP-020	1"	SWBD-HSPS	EXISTING TRANSFORMER	3#6, #10GND	(PANEL L1 & PANEL 2)
P-HSP-021				NOT USED	
P-HSP-022				NOT USED	
P-HSP-023				NOT USED	
P-HSP-024				NOT USED	
P-HSP-025				NOT USED	
P-HSP-026	3/4"	SWBD-HSPS	EXISTING TRANSFORMER	2#10, #10GND	(PANEL OLD PLANT)
P-HSP-027				NOT USED	
P-HSP-028	4"	SWBD-HSPS	VFD-0651	3#500kcmil, #1GND	
P-HSP-029	4"	SWBD-HSPS	VFD-0651	3#500kcmil, #1GND	
P-HSP-030	4"	VFD-0651	HIGH SERVICE PUMP NO. 1 (HSP-0651)	3#500kcmil, #1GND	VFD CABLE, VIA DSW
P-HSP-031	4"	VFD-0651	HIGH SERVICE PUMP NO. 1 (HSP-0651)	3#500kcmil, #1GND	VFD CABLE, VIA DSW
P-HSP-032				NOT USED	
P-HSP-033	4"	SWBD-HSPS	VFD-0652	3#500kcmil, #1GND	
P-HSP-034	4"	SWBD-HSPS	VFD-0652	3#500kcmil, #1GND	
P-HSP-035	4"	VFD-0652	HIGH SERVICE PUMP NO. 2 (HSP-0652)	3#500kcmil, #1GND	VFD CABLE, VIA DSW
P-HSP-036	4"	VFD-0652	HIGH SERVICE PUMP NO. 2 (HSP-0652)	3#500kcmil, #1GND	VFD CABLE, VIA DSW
P-HSP-037				NOT USED	
P-HSP-038	4"	SWBD-HSPS	VFD-0653	3#500kcmil, #1GND	
P-HSP-039	4"	SWBD-HSPS	VFD-0653	3#500kcmil, #1GND	
P-HSP-040	4"	VFD-0653	HIGH SERVICE PUMP NO. 3 (HSP-0653)	3#500kcmil, #1GND	VFD CABLE, VIA DSW
P-HSP-041	4"	VFD-0653	HIGH SERVICE PUMP NO. 3 (HSP-0653)	3#500kcmil, #1GND	VFD CABLE, VIA DSW
P-HSP-042				NOT USED	
P-HSP-043	4"	SWBD-HSPS	VFD-0654	3#500kcmil, #1GND	
P-HSP-044	4"	SWBD-HSPS	VFD-0654	3#500kcmil, #1GND	
P-HSP-045	4"	VFD-0654	HIGH SERVICE PUMP NO. 4 (HSP-0654)	3#500kcmil, #1GND	VFD CABLE, VIA DSW
P-HSP-046	4"	VFD-0654	HIGH SERVICE PUMP NO. 4 (HSP-0654)	3#500kcmil, #1GND	VFD CABLE, VIA DSW
P-HSP-047				NOT USED	
P-HSP-048				NOT USED	
P-HSP-049				NOT USED	
P-HSP-050				NOT USED	
P-HSP-051				NOT USED	
P-HSP-052	3/4"	SWBD-HSPS	MTRS-HS-EF-1	3#12, #12GND	
P-HSP-053	3/4"	MTRS-HS-EF-1	HS-EF-1	3#12, #12GND	
P-HSP-054				NOT USED	
P-HSP-055	4"	SWBD-HSPS	EXISTING LS PLANT MCC-2	3#500kcmil, #1GND	
P-HSP-056	4"	SWBD-HSPS	EXISTING LS PLANT MCC-2	3#500kcmil, #1GND	
P-HSP-057				NOT USED	
P-HSP-058	3/4"	SWBD-HSPS	EXISTING DSW	3#10, #10GND	FUEL DISPENSING STATION
P-HSP-059				NOT USED	
P-HSP-060	1"	SWBD-HSPS	PANEL MPZ-1	3#8, #10GND	
P-HSP-061				NOT USED	
P-HSP-062	3/4"	PANEL MPZ-1	HS-CU-1	2#12, #12GND	VIA DSW
P-HSP-063	3/4"	HS-CU-1	HS-AHU-1	2#12, #12GND	
P-HSP-064	3/4"	PANEL MPZ-1	HS-CU-2	2#12, #12GND	VIA DSW
P-HSP-065	3/4"	HS-CU-2	HS-AHU-2	2#12, #12GND	
P-HSP-066				NOT USED	
P-HSP-067	3/4"	PANEL MPZ-1	HS-CU-3	2#12, #12GND	VIA DSW
P-HSP-068	3/4"	HS-CU-3	HS-AHU-3	2#12, #12GND	
P-HSP-069	3/4"	PANEL MPZ-1	HS-CU-4	2#12, #12GND	VIA DSW
P-HSP-070	3/4"	HS-CU-4	HS-AHU-4	2#12, #12GND	
P-HSP-071				NOT USED	
P-HSP-072	3/4"	PANEL MPZ-1	PLC-10 (MCP-HSPS)	2#12, #12GND	
P-HSP-073	3/4"	PANEL MPZ-1	FIT-0060	2#12, #12GND	
P-HSP-074	3/4"	PANEL MPZ-1	AIT-0660	2#12, #12GND	
P-HSP-075				NOT USED	
P-HSP-076				NOT USED	
P-HSP-077				NOT USED	
P-HSP-078				NOT USED	
P-HSP-079				NOT USED	
P-HSP-080				NOT USED	

CONDUIT NO.	SIZE	FROM	TO	CONDUCTORS	REMARKS
P-HSP-081	EX. 3 1/2"	EXISTING FPL UTILITY TRANSFORMER NO.2	SWGR-MF-2	4#500kcmil	EXISTING DB YC04
P-HSP-082	EX. 3 1/2"	EXISTING FPL UTILITY TRANSFORMER NO.2	SWGR-MF-2	4#500kcmil	EXISTING DB YC04
P-HSP-083	EX. 3 1/2"	EXISTING FPL UTILITY TRANSFORMER NO.2	SWGR-MF-2	4#500kcmil	EXISTING DB YC04
P-HSP-084	EX. 3 1/2"	EXISTING FPL UTILITY TRANSFORMER NO.2	SWGR-MF-2	4#500kcmil	EXISTING DB YC04
P-HSP-085	EX. 3 1/2"	EXISTING FPL UTILITY TRANSFORMER NO.2	SWGR-MF-2	4#500kcmil	EXISTING DB YC04
P-HSP-086	EX. 3 1/2"	EXISTING FPL UTILITY TRANSFORMER NO.2	SWGR-MF-2	4#500kcmil	EXISTING DB YC04
P-HSP-087	EX. 3 1/2"	EXISTING FPL UTILITY TRANSFORMER NO.2	SWGR-MF-2	4#500kcmil	EXISTING DB YC04
P-HSP-088	EX. 3 1/2"	EXISTING FPL UTILITY TRANSFORMER NO.2	SWGR-MF-2	4#500kcmil	EXISTING DB YC04
P-HSP-089				NOT USED	
P-HSP-090	2"	PPB-1A	EMH-1	EMPTY W/ PULLSTRING	FUTURE TRANSFER PUMP NO.1
P-HSP-091	2"	PPB-1A	EMH-1	EMPTY W/ PULLSTRING	FUTURE TRANSFER PUMP NO.2
P-HSP-092	2"	PPB-1A	EMH-1	EMPTY W/ PULLSTRING	FUTURE TRANSFER PUMP NO.3
P-HSP-093				NOT USED	
P-HSP-094				NOT USED	
P-HSP-095				NOT USED	
P-HSP-096				NOT USED	
P-HSP-097				NOT USED	
P-HSP-098				NOT USED	
P-HSP-099				NOT USED	
P-HSP-100				NOT USED	
P-HSP-101				NOT USED	
P-HSP-102				NOT USED	

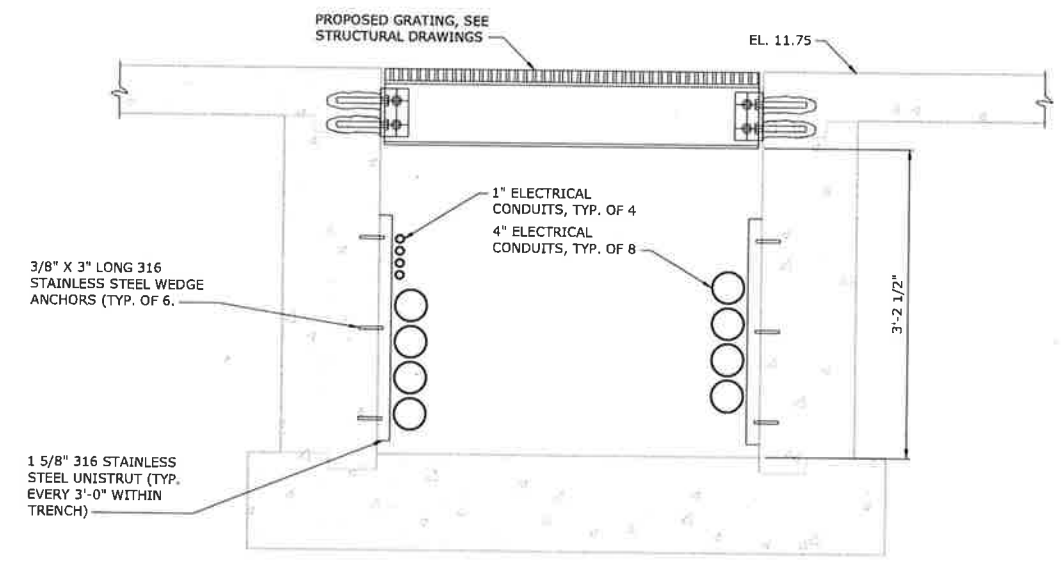

SECTION A / E-10
1" = 1'-0"

NOTES:

1. PIPE AND PIPE SUPPORTS NOT SHOWN FOR CLARITY.

REV	ISSUED FOR	DATE	BY
1	BID SET	08-06-18	G.B.

PROJECT ENGINEER:
DESIGNED BY: P. BOWLES
DRAWN BY: T. RAHLAN
CHECKED BY: B. PICKETT
IF THIS BAR DOES NOT MEASURE 1" THEN DRAWING IS NOT TO FULL SCALE 0 1/2" 1"

JOSEPH B. PICKETT LICENSED No. 74106 STATE OF FLORIDA PROFESSIONAL ENGINEER
8/7/18
J. BRAD PICKETT, PE NO. 74106

Hazen
HAZEN AND SAWYER
4000 HOLLYWOOD BOULEVARD, SUITE 750N
HOLLYWOOD, FLORIDA 33021
CERTIFICATE OF AUTHORIZATION NO. : 2771

CITY OF HALLANDALE BEACH

WATER TREATMENT PLANT
HIGH SERVICE PUMP REPLACEMENT

Hallandale Beach

ELECTRICAL
CONDUIT AND WIRE
SCHEDULES AND SECTION
VIEW

DATE: AUGUST 2018
HAZEN NO.: 40621-000
CONTRACT NO.: 1
DRAWING NUMBER: E-15

File: C:\SWX\VAULT2-PW\CNPW240270\E-15 Saved By: JOHNSON Save Date: 2018/08/06 10:19 AM
PLOT DATE: 2018/08/08 10:26:54 AM By: JOHNSON

CONDUIT NO.	SIZE	FROM	TO	CONDUCTORS	REMARKS
C-HSP-001	EX. 1 1/4"	EXISTING PLC-2	SWITCHGEAR (SWGR-MF-2)	48#14, #14GND	
C-HSP-002				NOT USED	
C-HSP-003				NOT USED	
C-HSP-004	1"	EXISTING PLC-3	PLC-10 (MCP-HSPS)	(1) FIBER OPTIC CABLE	
C-HSP-005				NOT USED	
C-HSP-006				NOT USED	
C-HSP-007	1"	PLC-10 (MCP-HSPS)	HIGH SERVICE PUMP NO. 1 VFD (VFD-0651)	22#14, #14GND	
C-HSP-008				NOT USED	
C-HSP-009	1"	PLC-10 (MCP-HSPS)	HIGH SERVICE PUMP NO. 2 VFD (VFD-0652)	22#14, #14GND	
C-HSP-010				NOT USED	
C-HSP-011	1"	PLC-10 (MCP-HSPS)	HIGH SERVICE PUMP NO. 3 VFD (VFD-0653)	22#14, #14GND	
C-HSP-012				NOT USED	
C-HSP-013	1"	PLC-10 (MCP-HSPS)	HIGH SERVICE PUMP NO. 4 VFD (VFD-0654)	22#14, #14GND	
C-HSP-014				NOT USED	
C-HSP-015				NOT USED	
C-HSP-016				NOT USED	
C-HSP-017				NOT USED	
C-HSP-018				NOT USED	
C-HSP-019				NOT USED	
C-HSP-020				NOT USED	
C-HSP-021				NOT USED	
C-HSP-022				NOT USED	
C-HSP-023	1"	HIGH SERVICE PUMP NO. 1 VFD (VFD-0651)	CPB-0651	2#12, 14#14, #12GND	
C-HSP-024	3/4"	CPB-0651	HIGH SERVICE PUMP NO. 1 DSW	2#14, #14GND	
C-HSP-025	3/4"	CPB-0651	HIGH SERVICE PUMP NO. 1	2#12, #12GND	MSH
C-HSP-026	3/4"	CPB-0651	TSH-0651	4#14, #14GND	
C-HSP-027	3/4"	CPB-0651	PSL-0651	4#14, #14GND	
C-HSP-028	3/4"	CPB-0651	PSH-0651	4#14, #14GND	
C-HSP-029				NOT USED	
C-HSP-030				NOT USED	
C-HSP-031	1"	HIGH SERVICE PUMP NO. 2 VFD (VFD-0652)	CPB-0652	2#12, 14#14, #12GND	
C-HSP-032	3/4"	CPB-0652	HIGH SERVICE PUMP NO. 2 DSW	2#14, #14GND	
C-HSP-033	3/4"	CPB-0652	HIGH SERVICE PUMP NO. 2	2#12, #12GND	MSH
C-HSP-034	3/4"	CPB-0652	TSH-0652	4#14, #14GND	
C-HSP-035	3/4"	CPB-0652	PSL-0652	4#14, #14GND	
C-HSP-036	3/4"	CPB-0652	PSH-0652	4#14, #14GND	
C-HSP-037				NOT USED	
C-HSP-038				NOT USED	
C-HSP-039	1"	HIGH SERVICE PUMP NO. 3 VFD (VFD-0653)	CPB-0653	2#12, 14#14, #12GND	
C-HSP-040	3/4"	CPB-0653	HIGH SERVICE PUMP NO. 3 DSW	2#14, #14GND	
C-HSP-041	3/4"	CPB-0653	HIGH SERVICE PUMP NO. 3	2#12, #12GND	MSH
C-HSP-042	3/4"	CPB-0653	TSH-0653	4#14, #14GND	
C-HSP-043	3/4"	CPB-0653	PSL-0653	4#14, #14GND	
C-HSP-044	3/4"	CPB-0653	PSH-0653	4#14, #14GND	
C-HSP-045				NOT USED	
C-HSP-046				NOT USED	
C-HSP-047	1"	HIGH SERVICE PUMP NO. 4 VFD (VFD-0654)	CPB-0654	2#12, 14#14, #12GND	
C-HSP-048	3/4"	CPB-0654	HIGH SERVICE PUMP NO. 4 DSW	2#14, #14GND	
C-HSP-049	3/4"	CPB-0654	HIGH SERVICE PUMP NO. 4	2#12, #12GND	MSH
C-HSP-050	3/4"	CPB-0654	TSH-0654	4#14, #14GND	
C-HSP-051	3/4"	CPB-0654	PSL-0654	4#14, #14GND	
C-HSP-052	3/4"	CPB-0654	PSH-0654	4#14, #14GND	
C-HSP-053				NOT USED	
C-HSP-054				NOT USED	
C-HSP-055	3/4"	MTRS-HS-EF-1	HS-EF-1 THERMOSTAT	4#14, #14GND	
C-HSP-056				NOT USED	
C-HSP-057				NOT USED	
C-HSP-058				NOT USED	
C-HSP-059				NOT USED	
C-HSP-060	1"	CPB-1A	EMH-1	EMPTY W/ PULLSTRING	FUTURE TRANSFER PUMP NO.1
C-HSP-061	1"	CPB-1A	EMH-1	EMPTY W/ PULLSTRING	FUTURE TRANSFER PUMP NO.2
C-HSP-062	1"	CPB-1A	EMH-1	EMPTY W/ PULLSTRING	FUTURE TRANSFER PUMP NO.3
C-HSP-063				NOT USED	
C-HSP-064				NOT USED	
C-HSP-065				NOT USED	
C-HSP-066				NOT USED	
C-HSP-067				NOT USED	
C-HSP-068				NOT USED	
C-HSP-069				NOT USED	
C-HSP-070				NOT USED	
C-HSP-071				NOT USED	
C-HSP-072				NOT USED	
C-HSP-073				NOT USED	
C-HSP-074				NOT USED	
C-HSP-075				NOT USED	
C-HSP-076				NOT USED	
C-HSP-077				NOT USED	
C-HSP-078				NOT USED	
C-HSP-079				NOT USED	
C-HSP-080				NOT USED	

CONDUIT NO.	SIZE	FROM	TO	CONDUCTORS	REMARKS
I-HSP-001	3/4"	EXISTING HS	LIT-0600	2(2/C#16TSH), #14GND	
I-HSP-002	3/4"	EXISTING PLC-3	PLC-10 (MCP-HSPS)	2(2/C#16TSH), #14GND	LIT-0600
I-HSP-003	1"	PLC-10 (MCP-HSPS)	HIGH SERVICE PUMP NO.1 VFD (VFD-0651)	1-(CAT-6), #14GND	
I-HSP-004	3/4"	PLC-10 (MCP-HSPS)	HIGH SERVICE PUMP NO.1 VFD (VFD-0651)	3(2/C#16TSH), #14GND	
I-HSP-005				NOT USED	
I-HSP-006	1"	PLC-10 (MCP-HSPS)	HIGH SERVICE PUMP NO.2 VFD (VFD-0652)	1-(CAT-6), #14GND	
I-HSP-007	3/4"	PLC-10 (MCP-HSPS)	HIGH SERVICE PUMP NO.2 VFD (VFD-0652)	3(2/C#16TSH), #14GND	
I-HSP-008				NOT USED	
I-HSP-009	1"	PLC-10 (MCP-HSPS)	HIGH SERVICE PUMP NO.3 VFD (VFD-0653)	1-(CAT-6), #14GND	
I-HSP-010	3/4"	PLC-10 (MCP-HSPS)	HIGH SERVICE PUMP NO.3 VFD (VFD-0653)	3(2/C#16TSH), #14GND	
I-HSP-011				NOT USED	
I-HSP-012	1"	PLC-10 (MCP-HSPS)	HIGH SERVICE PUMP NO.4 VFD (VFD-0654)	1-(CAT-6), #14GND	
I-HSP-013	3/4"	PLC-10 (MCP-HSPS)	HIGH SERVICE PUMP NO.4 VFD (VFD-0654)	3(2/C#16TSH), #14GND	
I-HSP-014				NOT USED	
I-HSP-015	1"	PLC-10 (MCP-HSPS)	SWBD-HSPS POWER MONITOR (A-SIDE)	2-(CAT-6), #14GND	
I-HSP-016	1"	PLC-10 (MCP-HSPS)	SWBD-HSPS POWER MONITOR (B-SIDE)	2-(CAT-6), #14GND	
I-HSP-017				NOT USED	
I-HSP-018	2"	PLC-10 (MCP-HSPS)	MULTI-PARAMETER ANALYZER (AIT-0660)	6(2/C#16TSH), #14GND	
I-HSP-019				NOT USED	
I-HSP-020	3/4"	PLC-10 (MCP-HSPS)	PIT-0660	2(2/C#16TSH), #14GND	
I-HSP-021				NOT USED	
I-HSP-022	3/4"	PLC-10 (MCP-HSPS)	FIT-0660	2(2/C#16TSH), #14GND	
I-HSP-023	3/4"	FIT-0660	FE-0660	CABLE BY MFR	
I-HSP-024				NOT USED	
I-HSP-025	3/4"	PLC-10 (MCP-HSPS)	PIT-0651A	2(2/C#16TSH), #14GND	
I-HSP-026	3/4"	PLC-10 (MCP-HSPS)	PIT-0651B	2(2/C#16TSH), #14GND	
I-HSP-027				NOT USED	
I-HSP-028	3/4"	PLC-10 (MCP-HSPS)	PIT-0652A	2(2/C#16TSH), #14GND	
I-HSP-029	3/4"	PLC-10 (MCP-HSPS)	PIT-0652B	2(2/C#16TSH), #14GND	
I-HSP-030				NOT USED	
I-HSP-031	3/4"	PLC-10 (MCP-HSPS)	PIT-0653A	2(2/C#16TSH), #14GND	
I-HSP-032	3/4"	PLC-10 (MCP-HSPS)	PIT-0653B	2(2/C#16TSH), #14GND	
I-HSP-033				NOT USED	
I-HSP-034	3/4"	PLC-10 (MCP-HSPS)	PIT-0654A	2(2/C#16TSH), #14GND	
I-HSP-035	3/4"	PLC-10 (MCP-HSPS)	PIT-0654B	2(2/C#16TSH), #14GND	
I-HSP-036				NOT USED	
I-HSP-037	1"	EXISTING PLC-2	SWITCHGEAR (SWGR-MF-2)	2-(CAT-6), #14GND	
I-HSP-038				NOT USED	
I-HSP-039				NOT USED	
I-HSP-040				NOT USED	
I-HSP-041				NOT USED	
I-HSP-042				NOT USED	

NOTES:

1. CONTRACTOR NOTE ALL CONDUIT TAGS DENOTED WITH "I" PREFIX SHALL BE A METALLIC RACEWAY COMPLETE FROM SOURCE TO LOAD. REFER TO THE REQUIREMENTS OF SPECIFICATION SECTION 16111 FOR FURTHER DETAILS.

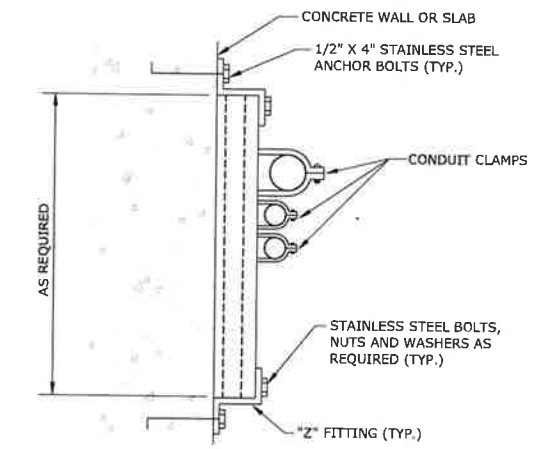

CONDUIT SUPPORT

1611114

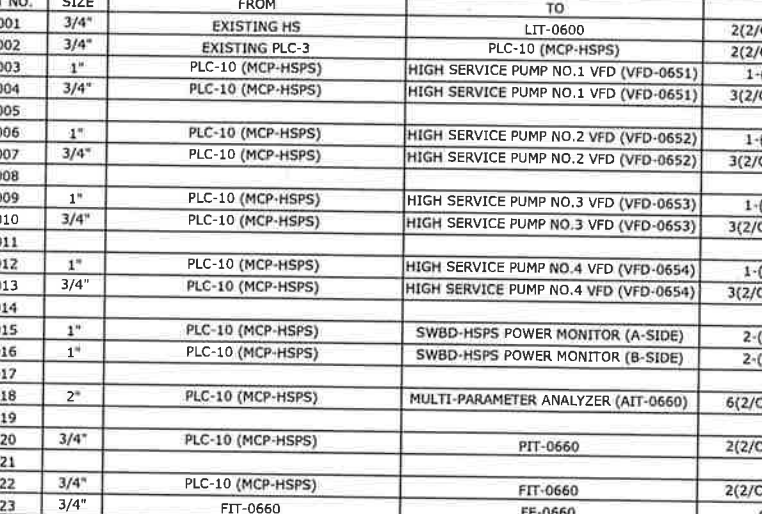

GROUNDING DELTA LAYOUT

1617015

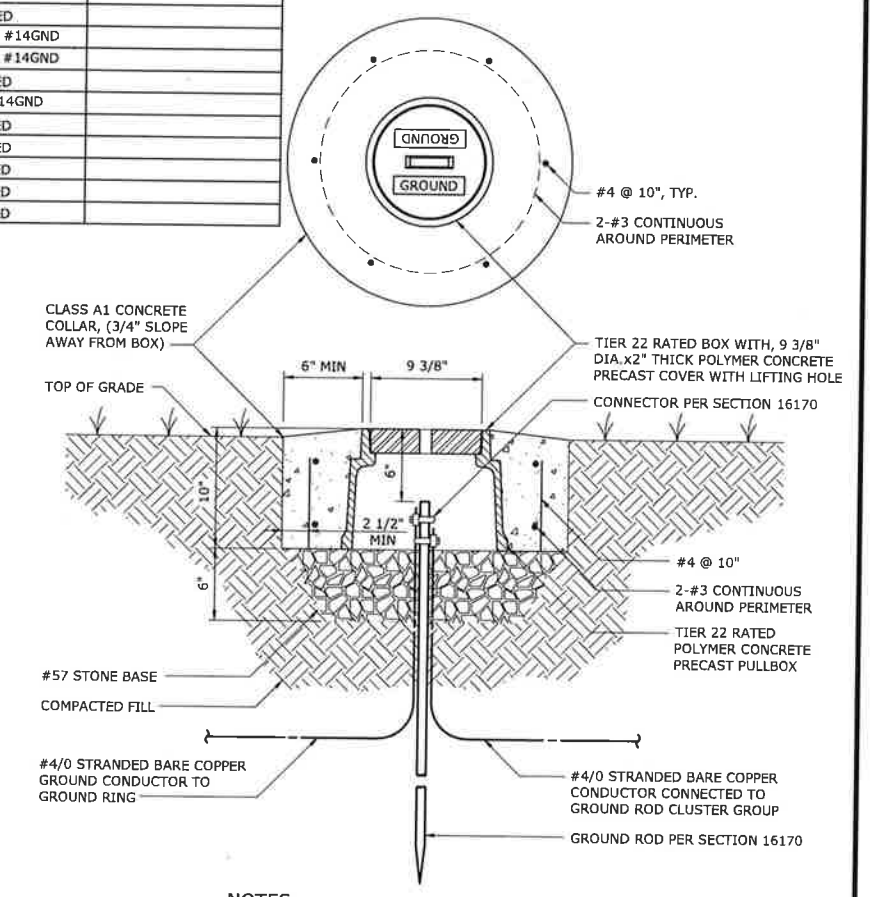

NOTES:

1. PRECAST PULLBOX AND COVER SHALL BE OLDCASTLE PART NUMBER 09101187, OR APPROVED EQUAL.

GROUND ROD TEST WELL INSTALLATION DETAIL

1617001

REV	ISSUED FOR	DATE	BY
1	BID SET	08-06-18	G.B.

PROJECT ENGINEER:
DESIGNED BY: P. BOWLES
DRAWN BY: T. RAHLAN
CHECKED BY: B. PICKETT

IF THIS BAR DOES NOT MEASURE 1" THEN DRAWING IS NOT TO FULL SCALE 0 1/2" 1"

JOSEPH BRADLEY PICKETT LICENSE No. 74106 STATE OF FLORIDA PROFESSIONAL ENGINEER 8/7/18

J. BRAD PICKETT, PE NO. 74106

Hazen

HAZEN AND SAWYER
4000 HOLLYWOOD BOULEVARD, SUITE 750N
HOLLYWOOD, FLORIDA 33021
CERTIFICATE OF AUTHORIZATION NO. : 2771

CITY OF HALLANDALE BEACH

WATER TREATMENT PLANT
HIGH SERVICE PUMP REPLACEMENT

Hallandale Beach

ELECTRICAL
CONDUIT AND WIRE
SCHEDULES AND DETAILS

DATE: AUGUST 2018
HAZEN NO.: 40621-000
CONTRACT NO.: 1
DRAWING NUMBER: E-16

File: C:\BMS\H2Q\-PW\DMS42781\E-16 Saved By: JOHNSON Save Date: 2018/08/06 10:19 AM
PLOT DATE: 2018/08/06 10:26:59 AM BY: JOHNSON

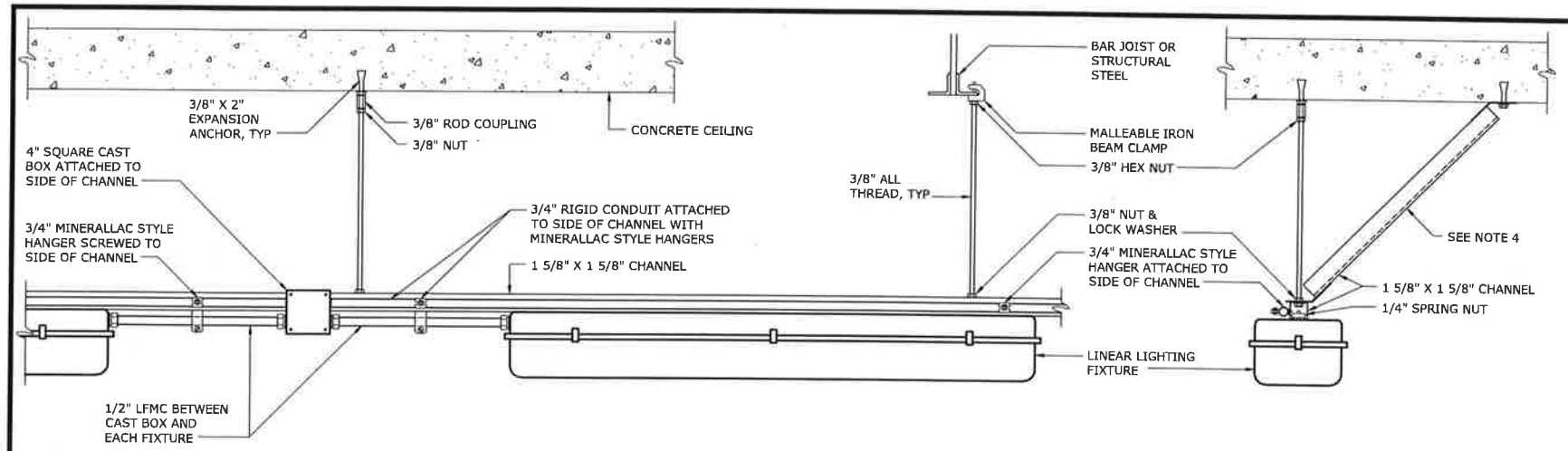

NOTES:

1. ADDITIONAL SEISMIC SUPPORTS MAY BE REQUIRED, SEE CODE SUMMARY DRAWING AND DRAWING E1 FOR SEISMIC CLASSIFICATIONS.
2. CONDUIT TYPE AND MATERIALS OF CONSTRUCTION FOR SUPPORTS AND HARDWARE SHALL BE AS REQUIRED FOR THE AREA IN WHICH THE FIXTURE IS INSTALLED AS SHOWN ON THE DRAWINGS AND IN ACCORDANCE WITH THE SPECIFICATIONS.
3. THE CONTRACTOR SHALL USE ONE OR BOTH OF THE DETAILS AS REQUIRED TO SUIT THE APPLICATION.
4. 45 DEGREE ANGLE BRACES SHALL BE INSTALLED TO PREVENT LATERAL MOVEMENT OF FIXTURE SUPPORTS. BRACES SHALL BE INSTALLED AT 8' INTERVALS ALONG ENTIRE LENGTH OF SUPPORT CHANNEL. TRANSVERSE MOVEMENT SHALL BE PREVENTED IN SIMILAR FASHION AT EACH END OF THE SUPPORT CHANNEL.

CLOSELY-SPACED PENDANT MOUNTED LINEAR FIXTURES INSTALLATION DETAIL

1650007

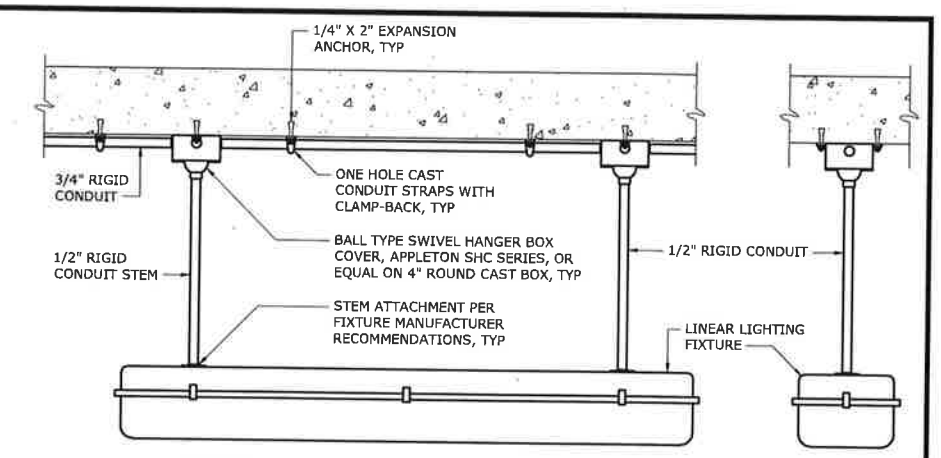

NOTES:

1. ADDITIONAL SEISMIC SUPPORTS MAY BE REQUIRED, SEE CODE SUMMARY DRAWING AND DRAWING E1 FOR SEISMIC CLASSIFICATIONS.
2. CONDUIT TYPE AND MATERIALS OF CONSTRUCTION FOR SUPPORTS AND HARDWARE SHALL BE AS REQUIRED FOR THE AREA IN WHICH THE FIXTURE IS INSTALLED AS SHOWN ON THE DRAWINGS AND IN ACCORDANCE WITH THE SPECIFICATIONS.

INDIVIDUAL PENDANT MOUNTED LINEAR FIXTURE INSTALLATION DETAIL

1650006

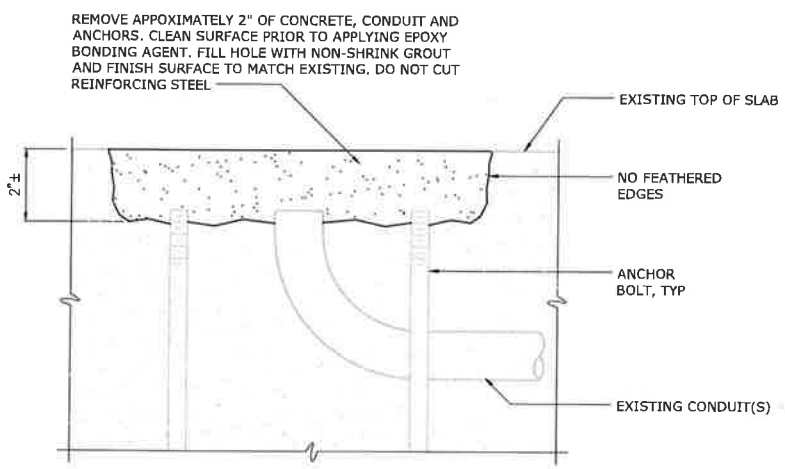

SEALING ABANDONED CONDUIT AND ANCHOR BOLTS

1611103

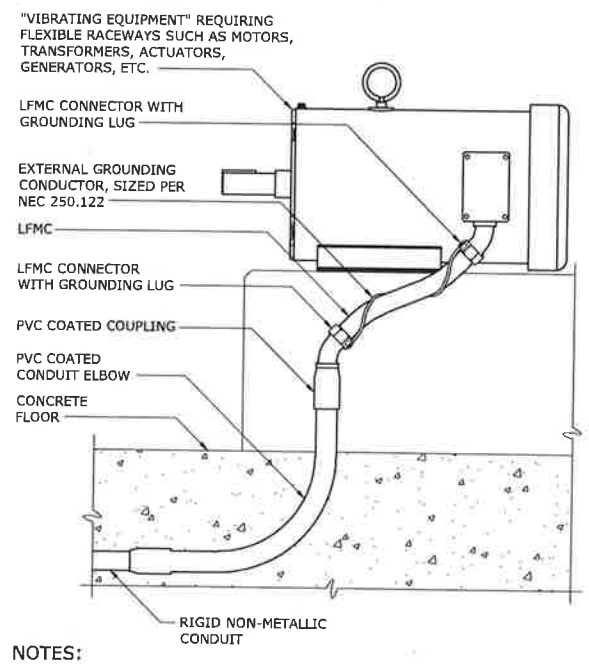

NOTES:

1. WHERE NON-METALLIC CONDUIT TRANSITIONS TO RIGID METALLIC CONDUIT AND / OR LIQUIDTIGHT METALLIC CONDUIT, (LFMC), TO FEED VIBRATING TYPE LOADS, THE CONTRACTOR SHALL FURNISH AND INSTALL AN EXTERNAL BARE COPPER GROUNDING CONDUCTOR AND APPROVED GROUNDING LFMC CONNECTORS TO ENSURE GROUND CONTINUITY TO THE RIGID METALLIC CONDUIT AS SHOWN. THE GROUNDING CONDUCTOR SHALL BE SIZED ACCORDING TO NEC 250.122 AND BE NEATLY WRAPPED AROUND LFMC AS SHOWN. LFMC INSTALLED IN THIS MANNER CANNOT BE USED FOR A CONTINUOUS GROUND PATH PER NEC 350.60.

LFMC CONDUIT GROUND STRAP DETAIL

1611104

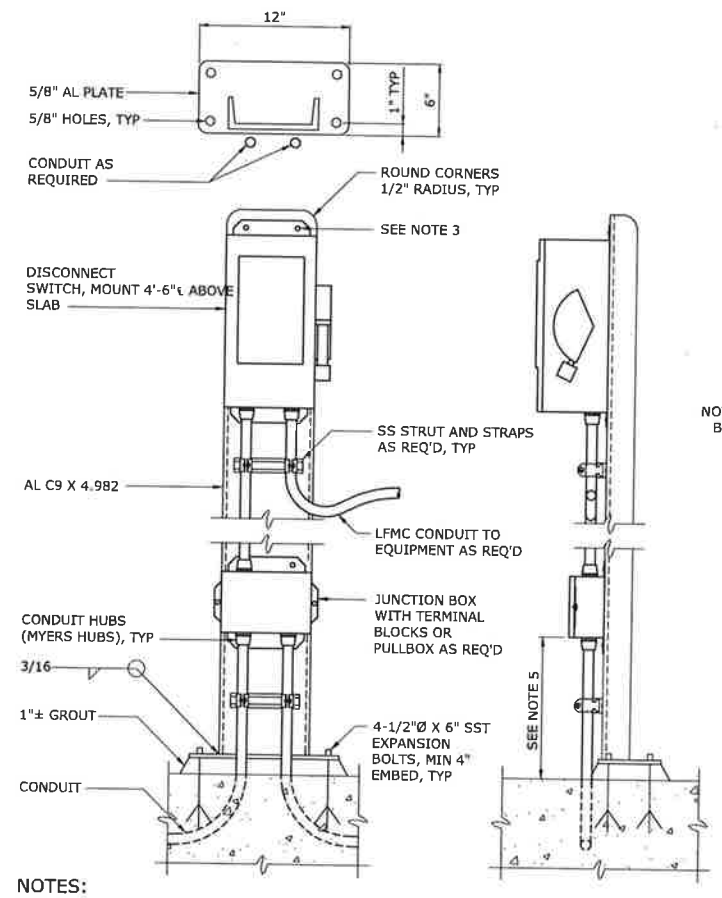

NOTES:

1. COAT ALUMINUM SURFACES IN CONTACT WITH CONCRETE PER SPECIFICATIONS.
2. SUPPLY 1'-2" DIAMETER X 2'-6" DEEP FOUNDATION WHERE MOUNTING SURFACE IS NOT AVAILABLE.
3. USE SST WASHERS, LOCKWASHERS, NUTS AND BOLTS FOR MOUNTING EQUIPMENT AND STRUT SUPPORTS TO CHANNEL. DRILL EQUIPMENT MOUNTING TABS AS NECESSARY TO COORDINATE WITH CHANNEL WIDTH.
4. REFERENCE STANDARD DETAIL 1611102 WHERE CONDUIT EMERGES FROM CONCRETE.
5. COORDINATE MOUNTING HEIGHT ABOVE CONCRETE WITH CLASSIFICATION REQUIREMENTS.

TYPICAL 30/60/100 AMP DISCONNECT SWITCH INSTALLATION DETAIL

1644001

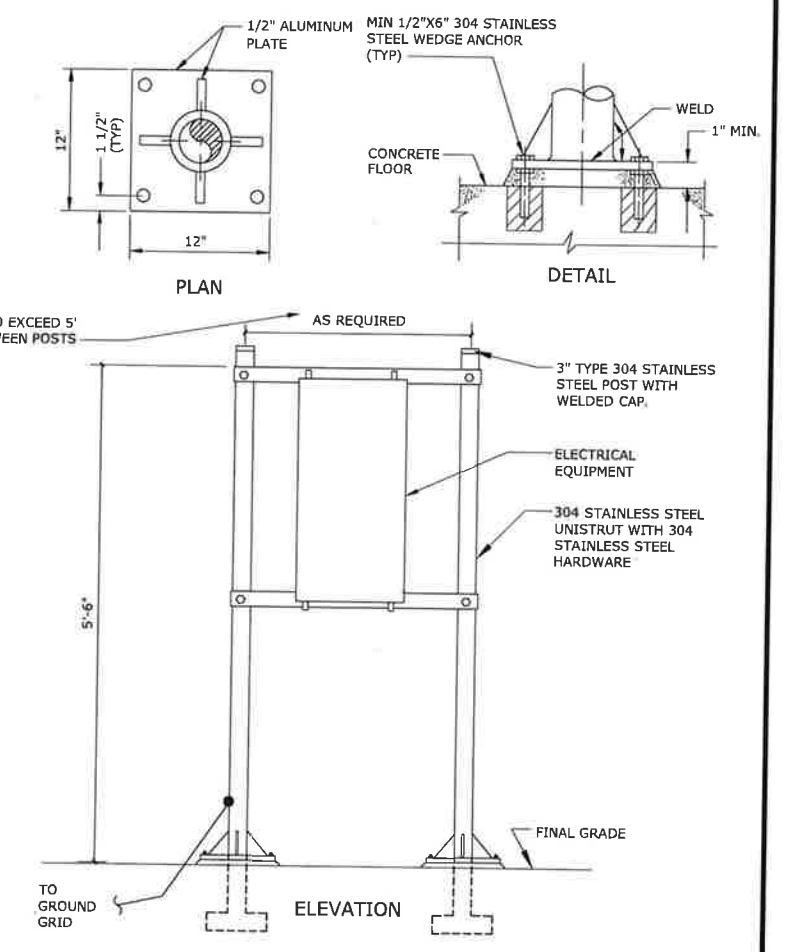

NOTE:

1. ADJUST THE NUMBER OF SUPPORT POSTS TO ACCOMMODATE THE EQUIPMENT TO BE INSTALLED.

TYPICAL EQUIPMENT RACK ON GRADE

1613003

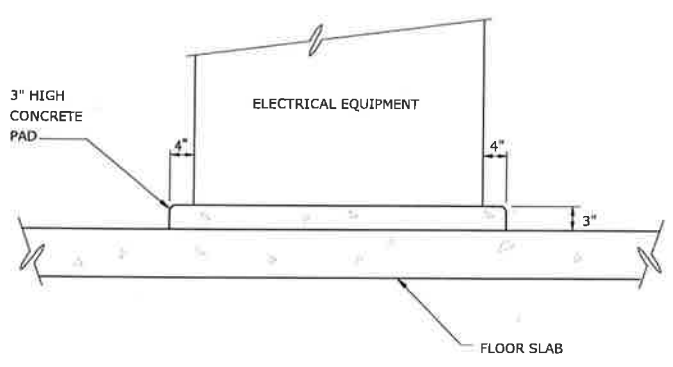

EQUIPMENT HOUSE KEEPING PAD

1600010

REV	ISSUED FOR	DATE	BY
1	BID SET	08-06-18	G.B.

PROJECT ENGINEER:
DESIGNED BY: P. BOWLES
DRAWN BY: T. RAHLAN
CHECKED BY: B. PICKETT
IF THIS BAR DOES NOT MEASURE 1" THEN DRAWING IS NOT TO FULL SCALE 0 1/2" 1"

JOSEPH B. PICKETT LICENSE No. 74106 STATE OF FLORIDA PROFESSIONAL ENGINEER 8/7/18

J. BRAD PICKETT, PE No. 74106

Hazen

HAZEN AND SAWYER
4000 HOLLYWOOD BOULEVARD, SUITE 750N
HOLLYWOOD, FLORIDA 33021
CERTIFICATE OF AUTHORIZATION NO. : 2771

CITY OF HALLANDALE BEACH

WATER TREATMENT PLANT
HIGH SERVICE PUMP REPLACEMENT

Hallandale Beach

ELECTRICAL
ELECTRICAL DETAILS - SHEET 1

DATE: AUGUST 2018
HAZEN NO.: 40621-000
CONTRACT NO.: 1
DRAWING NUMBER: E-17

File: C:\SWSVA2DA-PW\DMS40276\E-17 Saved By: JOHNSON Save Date: 2018/08/06 10:20 AM
Plot Date: 2018/08/06 10:27:04 AM By: JOHNSON

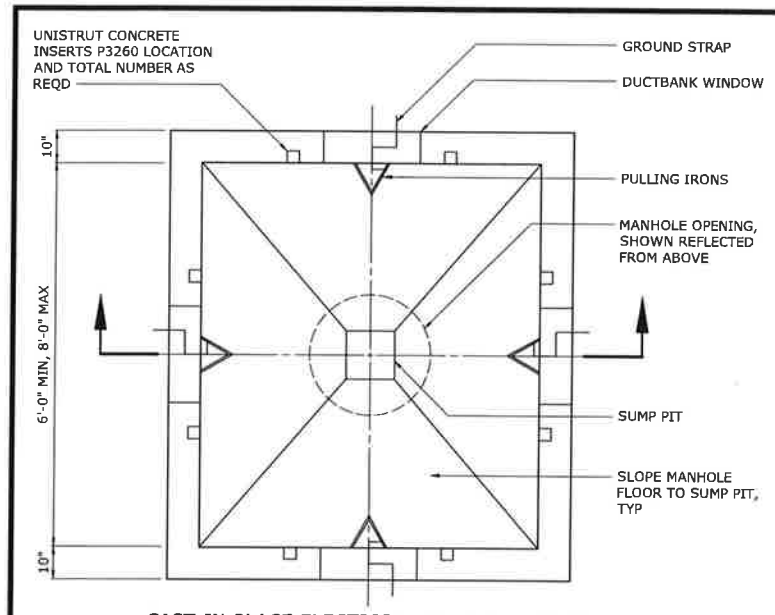

CAST-IN-PLACE ELECTRICAL MANHOLE - PLAN

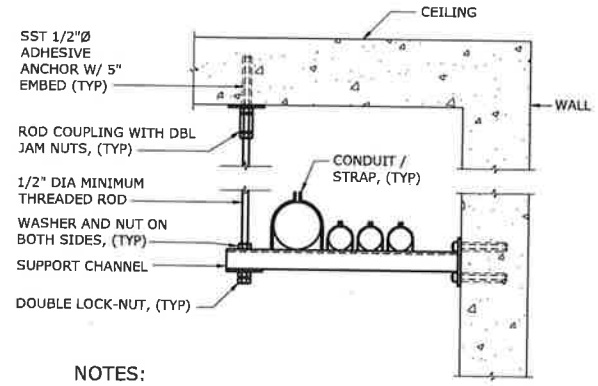

NOTES:

1. SPACE SUPPORTS AT 5'-0" MAXIMUM. HANGER SPACING SHALL BE BASED ON MAXIMUM LOAD.
2. ALL THREAD ROD SHALL BE USED ONLY FOR DUAL RACK.
3. SUPPORT CHANNEL AND HARDWARE MATERIALS OF CONSTRUCTION SHALL BE PER SECTION 16190.

CONDUIT SUPPORT RACK

1611403

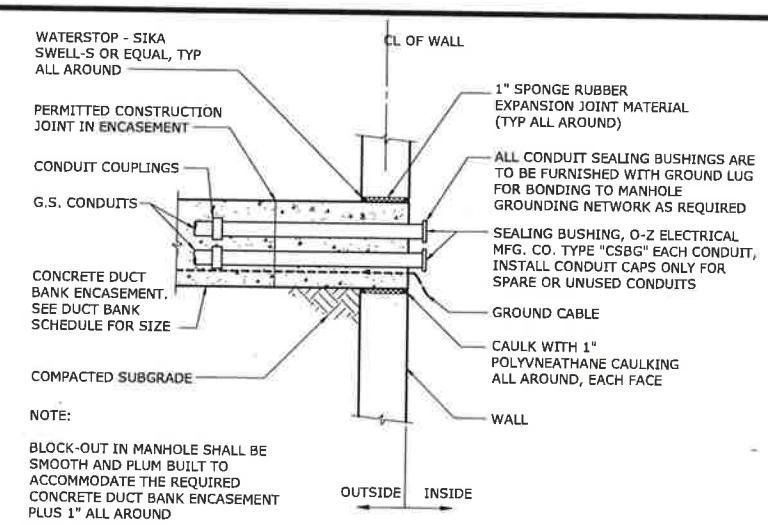

DUCT BANK TERMINATION AT MANHOLE

1611804

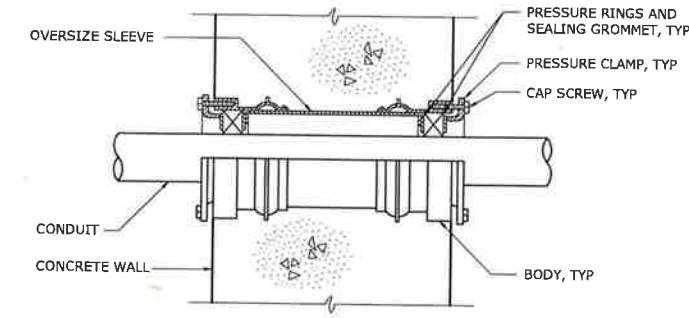

NOTE: USE O-Z/GEDNEY SEAL, TYPE "FSK", "WSK", OR EQUAL

CONDUIT THROUGH WALL SEAL

1611102

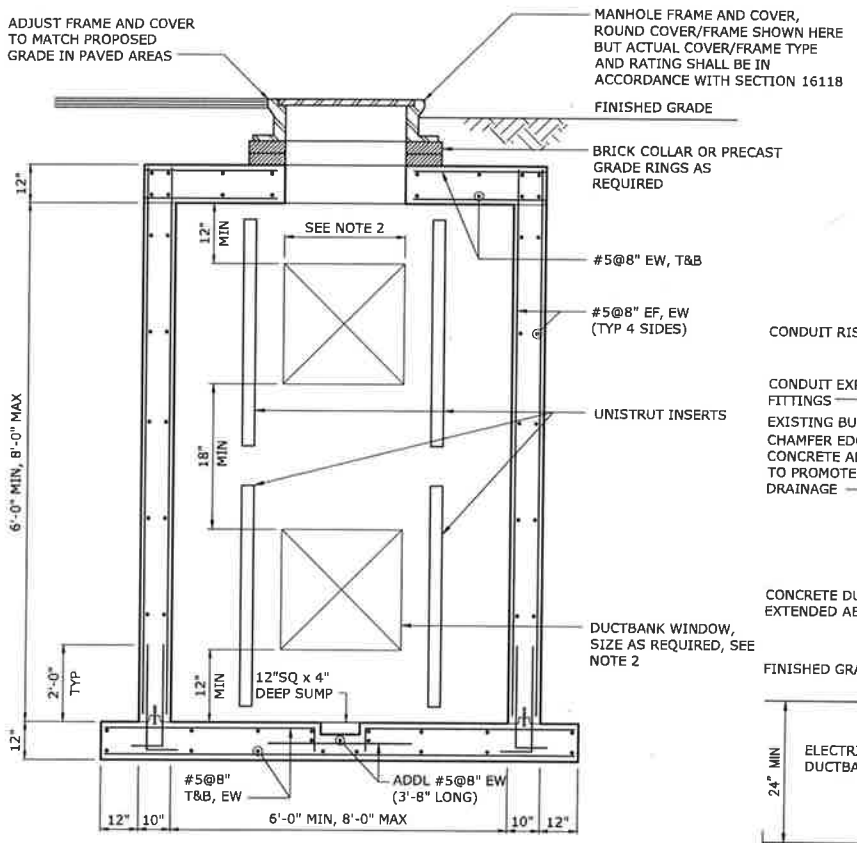

NOTES:

1. EPOXY PAINT ALL INTERIOR SURFACES IN ACCORDANCE WITH PAINT SPECIFICATIONS IN DIVISION 9.
2. DUCTBANK WINDOW WIDTH SHALL BE LIMITED TO ONE-THIRD (1/3) OF THE WALL WIDTH, I.E. 2'-0" FOR A 6'-0" WALL.
3. CAST-IN-PLACE OR PRE-CAST MANHOLES MAY BE USED AT THE CONTRACTOR'S OPTION. THIS DETAIL IS REPRESENTATIVE OF CAST-IN-PLACE MANHOLE CONSTRUCTION. IN EITHER CASE, MANHOLES SHALL BE FURNISHED AND/OR CONSTRUCTED IN ACCORDANCE WITH SECTION 16118.

CAST-IN-PLACE ELECTRICAL MANHOLE - SECTION

1611802

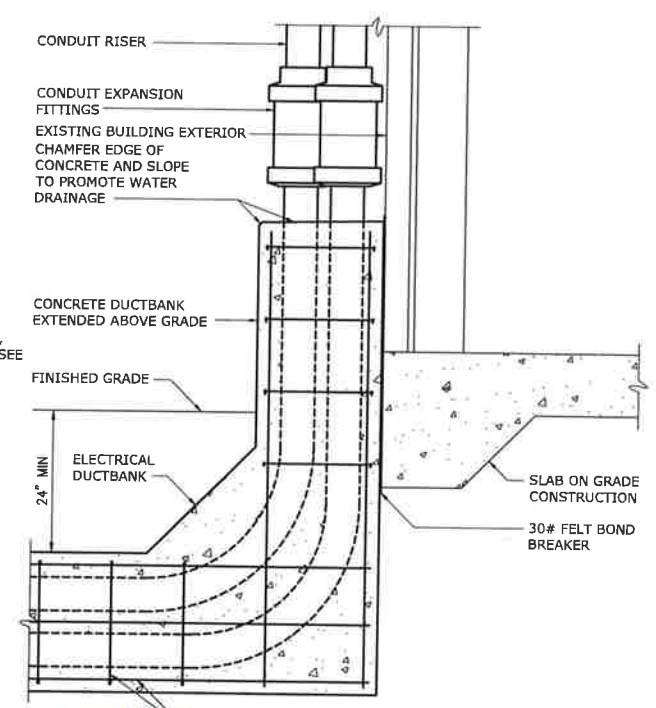

DUCTBANK ABUTMENT (FLOATING) TO EXISTING STRUCTURE

1611811

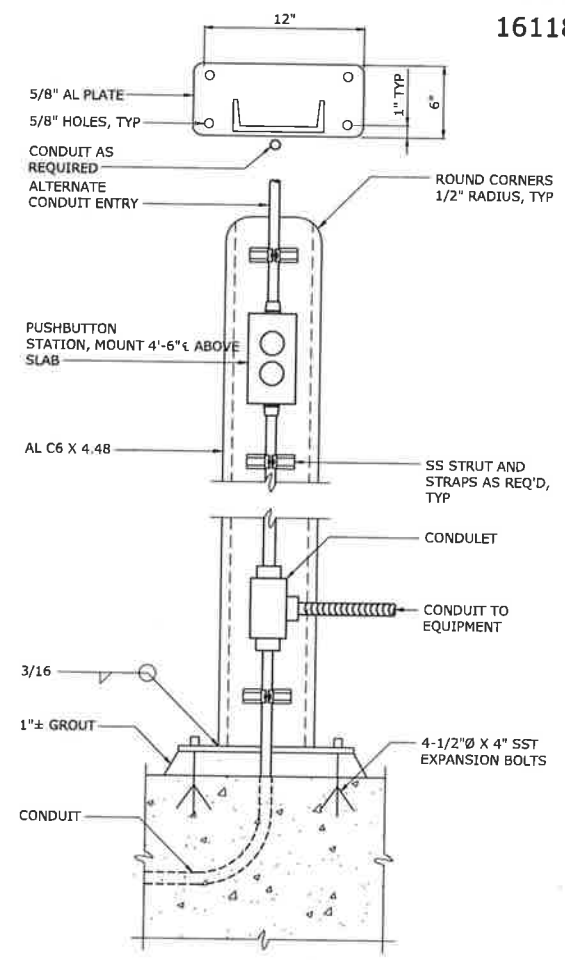

ELEVATION

NOTES:

1. COAT ALUMINUM SURFACES IN CONTACT WITH CONCRETE PER SPECIFICATIONS.
2. SUPPLY 1'-2" DIAMETER X 2'-6" DEEP FOUNDATION WHERE MOUNTING SURFACE IS NOT AVAILABLE.
3. USE SST WASHERS, NUTS AND BOLTS FOR MOUNTING DEVICES.

TYPICAL PUSHBUTTON STATION INSTALLATION DETAIL

1613001

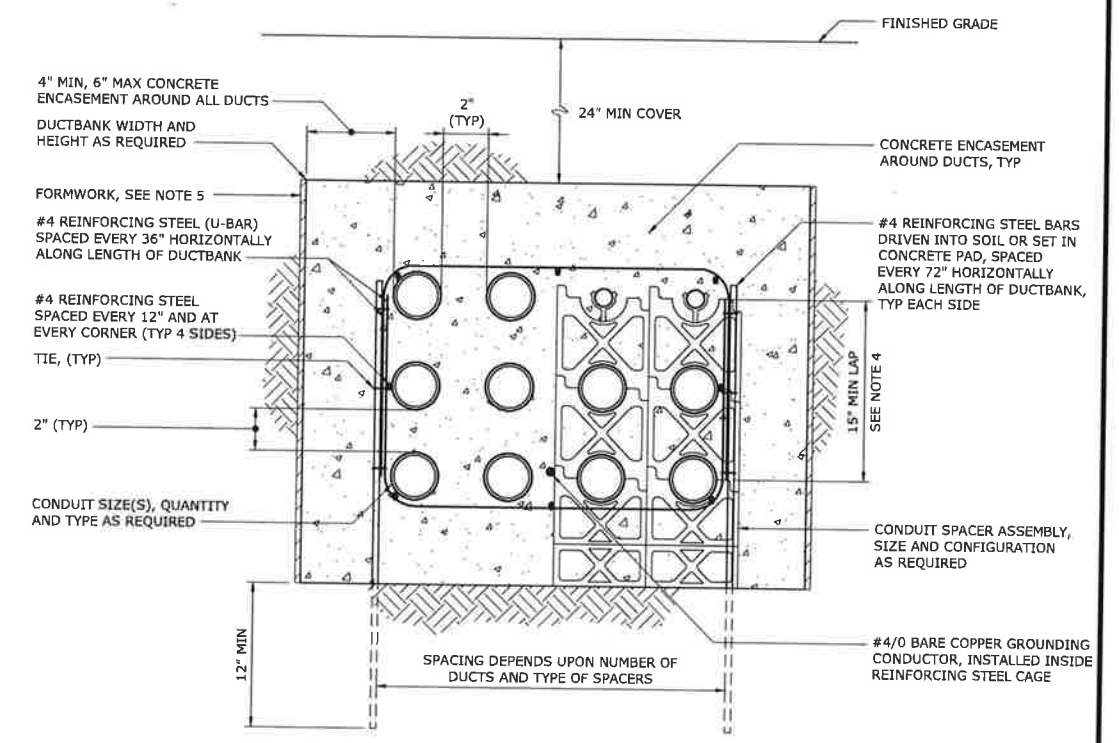

NOTES:

1. CONCRETE SHALL BE FURNISHED AND INSTALLED IN ACCORDANCE WITH SPECIFICATION SECTION 03300.
2. REINFORCING STEEL AND TIES SHALL BE FURNISHED AND INSTALLED IN ACCORDANCE WITH SPECIFICATION SECTION 03200. OVERLAP FOR REINFORCING STEEL SPLICES ALONG THE DUCTBANK LENGTH SHALL BE 15", MINIMUM.
3. CONDUIT SPACERS ARE REQUIRED IN ACCORDANCE WITH SPECIFICATION SECTION 16118. HORIZONTAL SPACING OF CONDUIT SPACER ASSEMBLIES ALONG LENGTH OF DUCTBANK SHALL AS SHOWN IN THE TABLE.
4. FOR DUCTBANKS LESS THAN 15" IN HEIGHT, THE LAP SHALL BE THE HEIGHT OF THE DUCTBANK.
5. IN POOR SOIL CONDITIONS, DUCTBANKS SHALL BE FORMED WITH FORMING MATERIALS TO MAINTAIN 4" MINIMUM ENCASEMENT. WHERE SOIL CONDITIONS PERMIT AND THE EXCAVATION IS MAINTAINED FOR A 4" MINIMUM TO 10" MAXIMUM ENCASEMENT, THE FORMWORK CAN BE OMITTED.

MAX SPACING BETWEEN CONDUIT SPACER ASSEMBLIES

CONDUIT SIZE	SPACING
1"	3 FT
1 1/4-2"	5 FT
2 1/2-3"	6 FT
3 1/2-5"	7 FT
6"	8 FT

TYPICAL DUCTBANK SECTION

1611801

REV	ISSUED FOR	DATE	BY
1	BID SET	08-06-18	G.B.

PROJECT ENGINEER:
DESIGNED BY: P. BOWLES
DRAWN BY: T. RAHLAN
CHECKED BY: B. PICKETT
IF THIS BAR DOES NOT MEASURE 1" THEN DRAWING IS NOT TO FULL SCALE 0 1/2" 1"

JOSEPH B. PICKETT LICENSE No. 74100 STATE OF FLORIDA PROFESSIONAL ENGINEER
8/7/18
J. BRAD PICKETT, PE NO. 74100

Hazen
HAZEN AND SAWYER
4000 HOLLYWOOD BOULEVARD, SUITE 750N
HOLLYWOOD, FLORIDA 33021
CERTIFICATE OF AUTHORIZATION NO. : 2771

CITY OF HALLANDALE BEACH

WATER TREATMENT PLANT
HIGH SERVICE PUMP REPLACEMENT

Hallandale Beach

ELECTRICAL
ELECTRICAL DETAILS - SHEET 2

DATE: AUGUST 2018
HAZEN NO.: 40621-000
CONTRACT NO.: 1
DRAWING NUMBER: E-18

File: C:\BMS\HAZEN-PW\40621\E-18 Saved By: JOHNSON Save Date: 2018/08/06 10:21 AM
PLOT DATE: 2018/08/06 10:21:00 AM BY: JOHNSON

INSTRUMENT AND FUNCTION SYMBOLS

LOCATION AND ACCESSIBILITY	SHARED DISPLAY/SHARED CONTROL: PRIMARY CHOICE OR BASIC PROCESS CONTROL SYSTEM	SHARED DISPLAY/SHARED CONTROL: ALTERNATE CHOICE OR SAFETY INSTRUMENTED SYSTEM	COMPUTER SYSTEMS AND SOFTWARE	DISCRETE
- LOCATED IN FIELD - NOT PANEL, CABINET, OR CONSOLE MOUNTED - VISIBLE AT FIELD LOCATION - NORMALLY OPERATOR ACCESSIBLE	ABCD 12345	ABCD 12345	ABCD 12345	ABCD 12345
- LOCATED IN OR ON FRONT OF CENTRAL OR MAIN PANEL OR CONSOLE - VISIBLE ON FRONT OF PANEL OR ON VIDEO DISPLAY - NORMALLY OPERATOR ACCESSIBLE AT PANEL FRONT OR CONSOLE	ABCD 12345	ABCD 12345	ABCD 12345	ABCD 12345
- LOCATED IN REAR OF CENTRAL OR MAIN PANEL - LOCATED IN CABINET BEHIND PANEL - NOT VISIBLE ON FRONT OF PANEL OR ON VIDEO DISPLAY - NOT NORMALLY OPERATOR ACCESSIBLE AT PANEL OR CONSOLE	ABCD 12345	ABCD 12345	ABCD 12345	ABCD 12345
- LOCATED IN OR ON FRONT OF SECONDARY OR LOCAL PANEL OR CONSOLE - VISIBLE ON FRONT OF PANEL OR ON VIDEO DISPLAY - NORMALLY OPERATOR ACCESSIBLE AT PANEL FRONT OR CONSOLE	ABCD 12345	ABCD 12345	ABCD 12345	ABCD 12345
- LOCATED IN REAR OF SECONDARY OR LOCAL PANEL - LOCATED IN FIELD CABINET - NOT NORMALLY OPERATOR ACCESSIBLE AT PANEL OR CONSOLE	ABCD 12345	ABCD 12345	ABCD 12345	ABCD 12345

X — SUFFIX (X) TO DIFFERENTIATE BETWEEN INSTRUMENTS AND FUNCTIONS THAT WOULD OTHERWISE HAVE THE SAME IDENTIFICATION.

SINGLE INSTRUMENT OR OTHER COMPONENT HAVING MULTIPLE FUNCTIONS OR SHARING A COMMON HOUSING

(ZZZ) — DESIGNATIONS OF CONTROL FUNCTIONS (ZZZ) ASSOCIATED WITH INSTRUMENT OR OTHER COMPONENTS.

AHC -	AUTO/HOLD/CLOSE	OC -	OPEN/CLOSE
AM -	AUTO/MANUAL	OSC -	OPEN/STOP/CLOSED
CALC -	CALCULATION	POT -	POTENTIOMETER
DEV -	DEVIATION	RL -	RAISE/LOWER
MOA -	MANUAL/OFF/AUTO	RS -	RUN/STOP
HOR -	HAND/OFF/REMOTE	RSL -	RAISE/STOP/LOWER
LOS -	LOCKOUT STOP	SD -	SHUTDOWN
LR -	LOCAL/REMOTE	SEL -	SELECT
LSR -	LOCAL/STOP/REMOTE	SP -	SET POINT
00 -	ON / OFF	SR -	START/RESET
		SS -	STOP/START

* ABCD 12345 — INSTRUMENT WITH COMPUTING OR CONVERTING FUNCTION

* ABCD 12345 — CONTROL SYSTEM COMPUTING FUNCTION

CONVERT

E - VOLTAGE	H - HYDRAULIC
I - CURRENT	O - ELECTROMAGNETIC, SONIC
P - PNEUMATIC	R - RESISTANCE (ELECT.)
A - ANALOG	D - DIGITAL
B - BINARY	

COMPUTE

*	Σ SUMMING	P	PROPORTIONAL	△	DIFFERENCE
	− SUBTRACTOR	R	DERIVATIVE	>	HIGH SELECTING
	X MULTIPLYING	Σ/n	AVERAGING	<	LOW SELECTING
	÷ DIVIDING	I:I	RATIO	∫	INTEGRAL
	ROOT EXTRACTION	PID	PID	#	COMPLEX FUNCTION

= 1, 2, 3, etc.
REFER TO NOTE ON SAME SHEET FOR BRIEF DESCRIPTION

* — ELECTRICAL CONTROL INTERLOCK

\# — COMPLEX INTERLOCK
= 1, 2, 3, etc.
REFER TO NOTE ON SAME SHEET FOR BRIEF DESCRIPTION

AND — AND LOGIC

OR — OR LOGIC

ABCD 1234 — PILOT LIGHT

VALVE, GATE, AND ACTUATOR SYMBOLS

- GATE VALVE
- PLUG VALVE
- GLOBE VALVE
- BALL VALVE
- BUTTERFLY VALVE
- BALL CHECK VALVE
- SWING CHECK VALVE
- CHECK VALVE
- 3-WAY VALVE
- 3-WAY BALL VALVE
- DIAPHRAGM VALVE
- PINCH VALVE
- NEEDLE VALVE
- SLUICE GATE
- STOP/SLIDE GATE
- S — SOLENOID ACTUATOR
- P — PNEUMATIC ACTUATOR
- BACKFLOW PREVENTER
- PRESSURE RELIEF VALVE
- VACUUM RELIEF VALVE
- COMBINATION VACUUM AND PRESSURE RELIEF VALVE
- PRESSURE-REDUCING REGULATOR
- BACKPRESSURE REGULATOR
- V — AIR RELEASE VALVE
- M — ROTARY MOTOR
- E/H — ELECTROHYDRAULIC ACTUATOR
- MANUAL ACTUATOR

PUMP AND EQUIPMENT SYMBOLS

- CENTRIFUGAL WET PIT PUMP (OR DRY-PIT SUBMERSIBLE)
- BLOWER (CENTRIFUGAL)
- GEAR PUMP OR BLOWER (POSITIVE DISPLACEMENT)
- CHOPPER PUMP
- PISTON PUMP
- DIAPHRAGM PUMP
- ROTARY LOBE PUMP OR BLOWER (POSITIVE DISPLACEMENT)
- METERING PUMP
- COMPRESSOR
- PROGRESSIVE CAVITY PUMP
- VERTICAL PUMP
- INLINE GRINDER
- CENTRIFUGAL PUMP
- SCREW CENTRIFUGAL PUMP
- M — MIXER

MISCELLANEOUS SYMBOLS

- QUICK CONNECT
- BLIND FLANGE
- FLEXIBLE HOSE
- CALIBRATION CYLINDER
- PULSATION DAMPENER
- EXPANSION TANK
- HORN
- HORN/STROBE
- RUPTURE DISK
- V — VENT
- DIAPHRAGM SEAL
- FULL LINE OR TAPPED RING SEAL
- D — DRAIN
- XXXX-YYYY — EQUIPMENT OR PANEL TAG
- M — MOTOR
- FILTER
- AIR FILTER
- STATIC MIXER
- INJECTOR

IDENTIFICATION LETTERS

	FIRST LETTERS: MEASURED OR INITIATING VARIABLE	FIRST LETTERS: VARIABLE MODIFIER	SUCCEEDING LETTERS: READOUT/ PASSIVE FUNCTION	SUCCEEDING LETTERS: OUTPUT/ ACTIVE FUNCTION	SUCCEEDING LETTERS: FUNCTION MODIFIER
A	ANALYSIS		ALARM		
B	BURNER, COMBUSTION		USER'S CHOICE	USER'S CHOICE	USER'S CHOICE
C	CONDUCTIVITY			CONTROL	CLOSE
D	DENSITY (MASS) OR SPECIFIC GRAVITY	DIFFERENCE, DIFFERENTIAL			DEVIATION
E	VOLTAGE (EMF)		SENSOR, PRIMARY ELEMENT		
F	FLOW, FLOW RATE	RATIO			
G	USER'S CHOICE		GLASS, GAUGE, VIEWING DEVICE		
H	HAND				HIGH
I	CURRENT		INDICATE		
J	POWER		SCAN		
K	TIME, SCHEDULE	TIME RATE OF CHANGE		CONTROL STATION	
L	LEVEL		LIGHT		LOW
M	MOISTURE OR HUMIDITY	MOMENTARY			MIDDLE, INTERMEDIATE
N	TORQUE		USER'S CHOICE	USER'S CHOICE	USER'S CHOICE
O	USER'S CHOICE		ORIFICE, RESTRICTION		OPEN
P	PRESSURE		POINT (TEST CONNECTION)		
Q	QUANTITY	INTEGRATE, TOTALIZE	INTEGRATE, TOTALIZE		
R	RADIATION		RECORD		RUN
S	SPEED, FREQUENCY	SAFETY		SWITCH	STOP
T	TEMPERATURE			TRANSMIT	
U	MULTIVARIABLE		MULTIFUNCTION	MULTIFUNCTION	
V	VIBRATION, MECHANICAL ANALYSIS			VALVE, DAMPER, LOUVER	
W	WEIGHT, FORCE		WELL PROBE		
X	UNCLASSIFIED	X-AXIS	ACCESSORY DEVICES, UNCLASSIFIED	UNCLASSIFIED	UNCLASSIFIED
Y	EVENT, STATE, PRESENCE	Y-AXIS		AUXILIARY DEVICES	
Z	POSITION, DIMENSION	Z-AXIS, SAFETY INSTRUMENTED SYSTEM		DRIVER, ACTUATOR, UNCLASSIFIED FINAL CONTROL ELEMENT	

PRIMARY ELEMENT SYMBOLS

- M — MAGNETIC FLOW METER
- SONIC FLOW METER
- ΔT — THERMAL MASS FLOW METER
- TURBINE OR PROPELLER FLOW METER
- VENTURI FLOW METER
- AVERAGING PITOT TUBE
- VORTEX FLOW METER
- POSITIVE DISPLACEMENT FLOW METER
- PARSHALL FLUME
- WEIR
- ORIFICE PLATE
- FICV — ROTAMETER WITH INTEGRAL VALVE
- ABCD 1234 XX — XX: RF=ADMITTANCE/CAPACITANCE MAN=MANOMETER
- ULTRASONIC LEVEL SENSOR
- SUBMERSIBLE LEVEL SENSOR
- NON-CONTACT RADAR LEVEL SENSOR
- GUIDED WAVE RADAR LEVEL SENSOR
- FLOAT LEVEL SWITCH
- CAPACITANCE LEVEL SENSOR

ANALYTICAL ABBREVIATIONS

AXX 12345 — ANALYSIS INSTRUMENT

(ZZZ) (ZZZ) = ALK - ALKALINITY
CH4 - METHANE
CL2 - CHLORINE
COMB - COMBUSTIBLE GAS
CON - CONDUCTIVITY
DO - DISSOLVED OXYGEN
IR - INFRARED
H2S - HYDROGEN SULFIDE
LEL - LOWER EXPLOSIVE LIMIT
METH - METHANOL VAPOR
NH3 - AMMONIA
NO3 - NITRATE
O2 - OXYGEN
O3 - OZONE
ORP - OXIDATION/REDUCTION POTENTIAL
PETRO - PETROLEUM VAPOR
PH - HYDROGEN ION CONCENTRATION
PO4 - PHOSPHATE
SO2 - SULFUR DIOXIDE
TH - TOTAL HARDNESS
TSS - TOTAL SUSPENDED SOLIDS
TURB - TURBIDITY
UV - ULTRAVIOLET

GENERAL NOTES

1. SYMBOLS AND NOMENCLATURE ARE BASED ON ANSI/ISA-5.1-2009.
2. REFER TO LEGEND SHEETS OF OTHER DISCIPLINES FOR ADDITIONAL SYMBOLS AND ABBREVIATIONS.
3. REFER TO SPECIFICATIONS FOR ADDITIONAL DETAIL ON CONTROL SYSTEM FUNCTIONAL REQUIREMENTS.
4. INSTRUMENTS AND PANELS DENOTED WITH AN ASTERISK (*) ARE PROVIDED BY OTHER DISCIPLINES. REFER TO THE DRAWINGS AND SPECIFICATIONS OF OTHER DISCIPLINES FOR ADDITIONAL DETAIL.
5. POWER SUPPLIES FOR LOOPS OR SYSTEMS SHALL BE FURNISHED BY THE INSTRUMENTATION SUPPLIER TO MEET THE PARTICULAR CHARACTERISTICS (E.G., VOLTAGE AND CURRENT REQUIREMENTS) OF COMPONENTS IN EACH LOOP OR SYSTEM.

LINE SYMBOLS AND LEGEND

- MAJOR PROCESS PIPES OR CHANNELS
- SECONDARY PROCESS OR MECHANICAL CONNECTION
- AIR SUPPLY OR SIGNAL
- ELECTRICAL SIGNAL/ COPPER CABLE
- DATA LINK OR INTERNAL SOFTWARE LINK
- FO — FIBER OPTIC CABLE
- C6 — CAT6 CABLE
- PROCESS/SIGNALS NOT CONNECTED (CROSSING)
- PROCESS/SIGNALS CONNECTED
- TAG / DRAWING — OFF-SHEET CONNECTOR
- DISCRETE ELECTRICAL SIGNALS
- DISCRETE DIGITAL SIGNALS
- ANALOG ELECTRICAL SIGNALS
- ANALOG DIGITAL SIGNALS

REV	ISSUED FOR	DATE	BY
1	BID SET	8/6/18	GAB

PROJECT ENGINEER:	G.A.B.
DESIGNED BY:	K.R.D.
DRAWN BY:	K.R.D.
CHECKED BY:	G.A.B.

IF THIS BAR DOES NOT MEASURE 1" THEN DRAWING IS NOT TO FULL SCALE — 0 1/2" 1"

KEITH R. DINNEN
NO. 78757

KEITH R. DINNEN LICENSE No. 78757 STATE OF FLORIDA PROFESSIONAL ENGINEER 08/07/2018

Hazen

HAZEN AND SAWYER
4000 HOLLYWOOD BOULEVARD, SUITE 750N
HOLLYWOOD, FLORIDA 33021
CERTIFICATE OF AUTHORIZATION NO. : 2771

CITY OF HALLANDALE BEACH

WATER TREATMENT PLANT
HIGH SERVICE PUMP REPLACEMENT

Hallandale Beach

INSTRUMENTATION SYMBOLS AND LEGEND

DATE:	AUGUST 2018
HAZEN NO.:	40621-000
CONTRACT NO.:	1
DRAWING NUMBER:	I-01

BID SET

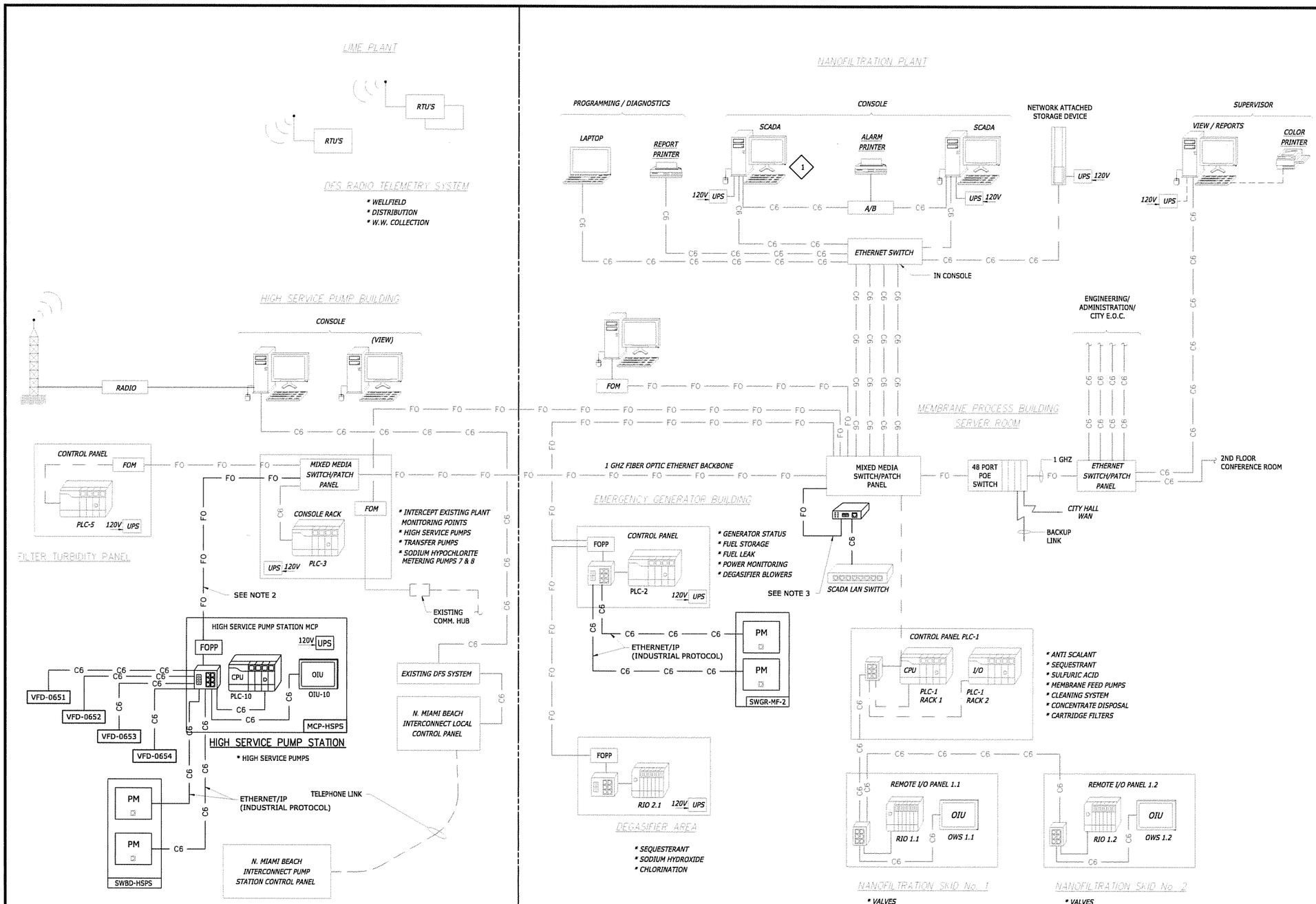

NOTES:

1. UPDATE EXISTING HIGH SERVICE PUMP STATION SCADA HMI SCREENS AND INTEGRATE ADDITIONAL PLC I/O TAGS INTO THE EXISTING SCADA SYSTEM, INCLUDING THE HISTORIAN.
2. A NEW 6-STRAND MULTI-MODE 62.5/125um FIBER OPTIC CABLE SHALL BE INSTALLED BETWEEN NEW FIBER OPTIC PATCH PANEL IN PLC-10 CABINET AND EXISTING PATCH PANEL (MIXED MEDIA SWITCH/PATCH PANEL) IN PLC-3 CABINET. FIBER CABLE SHALL BE TERMINATED WITH SC TYPE CONNECTORS IN PLC-3 CABINET AND LC TYPE CONNECTORS IN PLC-10 CABINET.
3. FURNISH AND INSTALL NEW MULTI-MODE 62.5/125UM FIBER OPTIC PATCH CABLE, FIBER-TO-COPPER MEDIA CONVERTER, AND CAT6 PATCH CABLE. CAT6 PATCH CABLE SHALL BE CONNECTED TO SPARE PORT ON EXISTING SCADA LAN SWITCH.
4. CONFIGURE EXISTING LAN SWITCH IN PLC-2 AND SCADA HMI SOFTWARE TO ALLOW SCADA SYSTEM TO POLE ELECTICAL POWER DATA FROM SWGR-MF-2 POWER MONITORS OVER ETHERNET/IP NETWORK. ALL POWER DATA IS TO BE DISPLAYED ON THE SCADA HMI AND LOGGED IN THE SCADA HISTORIAN.

LEGEND

EXISTING

PROPOSED

SYMBOLS

- OIU — OPERATOR INTERFACE UNIT (OIU)
- RACK MOUNT ETHERNET LAN SWITCH
- ETHERNET LAN SWITCH WITH INTEGRAL FIBER OPTIC MEDIA CONVERTER
- ETHERNET LAN SWITCH
- FIBER-TO-COPPER MEDIA CONVERTER
- PROGRAMMABLE LOGIC CONTROLLER (PLC)
- REMOTE INPUT/OUTPUT (RIO)
- FOPP — COMPACT FIBER OPTIC PATCH PANEL
- PM — POWER MONITOR

REV	ISSUED FOR	DATE	BY
1	BID SET	8/6/18	GAB

PROJECT ENGINEER:	G.A.B.
DESIGNED BY:	K.R.D.
DRAWN BY:	K.R.D.
CHECKED BY:	G.A.B.

IF THIS BAR DOES NOT MEASURE 1" THEN DRAWING IS NOT TO FULL SCALE 0 1/2" 1"

KEITH R. DINNEN
LICENSE
08/07/2018
No. 78757
STATE OF FLORIDA
PROFESSIONAL ENGINEER

KEITH R. DINNEN
NO. 78757

Hazen

HAZEN AND SAWYER
4000 HOLLYWOOD BOULEVARD, SUITE 750N
HOLLYWOOD, FLORIDA 33021
CERTIFICATE OF AUTHORIZATION NO. : 2771

CITY OF HALLANDALE BEACH

WATER TREATMENT PLANT
HIGH SERVICE PUMP REPLACEMENT

Hallandale Beach

SCADA NETWORK DIAGRAM

DATE:	AUGUST 2018
HAZEN NO.:	40621-000
CONTRACT NO.:	1
DRAWING NUMBER:	I-02

BID SET

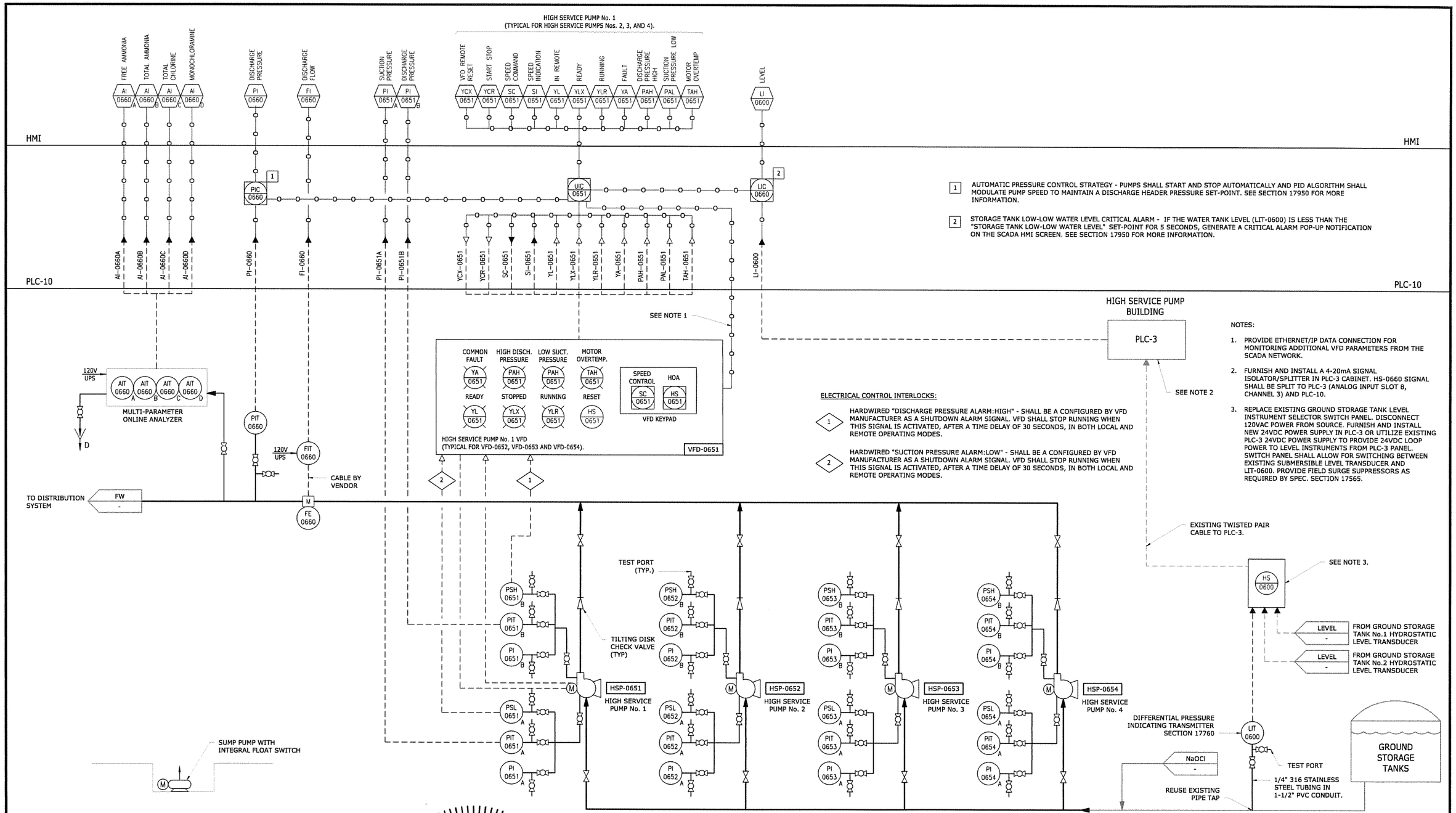

1 AUTOMATIC PRESSURE CONTROL STRATEGY - PUMPS SHALL START AND STOP AUTOMATICALLY AND PID ALGORITHM SHALL MODULATE PUMP SPEED TO MAINTAIN A DISCHARGE HEADER PRESSURE SET-POINT. SEE SECTION 17950 FOR MORE INFORMATION.

2 STORAGE TANK LOW-LOW WATER LEVEL CRITICAL ALARM - IF THE WATER TANK LEVEL (LIT-0600) IS LESS THAN THE "STORAGE TANK LOW-LOW WATER LEVEL" SET-POINT FOR 5 SECONDS, GENERATE A CRITICAL ALARM POP-UP NOTIFICATION ON THE SCADA HMI SCREEN. SEE SECTION 17950 FOR MORE INFORMATION.

ELECTRICAL CONTROL INTERLOCKS:

1 HARDWIRED "DISCHARGE PRESSURE ALARM:HIGH" - SHALL BE A CONFIGURED BY VFD MANUFACTURER AS A SHUTDOWN ALARM SIGNAL. VFD SHALL STOP RUNNING WHEN THIS SIGNAL IS ACTIVATED, AFTER A TIME DELAY OF 30 SECONDS, IN BOTH LOCAL AND REMOTE OPERATING MODES.

2 HARDWIRED "SUCTION PRESSURE ALARM:LOW" - SHALL BE A CONFIGURED BY VFD MANUFACTURER AS A SHUTDOWN ALARM SIGNAL. VFD SHALL STOP RUNNING WHEN THIS SIGNAL IS ACTIVATED, AFTER A TIME DELAY OF 30 SECONDS, IN BOTH LOCAL AND REMOTE OPERATING MODES.

NOTES:

1. PROVIDE ETHERNET/IP DATA CONNECTION FOR MONITORING ADDITIONAL VFD PARAMETERS FROM THE SCADA NETWORK.
2. FURNISH AND INSTALL A 4-20mA SIGNAL ISOLATOR/SPLITTER IN PLC-3 CABINET. HS-0660 SIGNAL SHALL BE SPLIT TO PLC-3 (ANALOG INPUT SLOT 8, CHANNEL 3) AND PLC-10.
3. REPLACE EXISTING GROUND STORAGE TANK LEVEL INSTRUMENT SELECTOR SWITCH PANEL. DISCONNECT 120VAC POWER FROM SOURCE. FURNISH AND INSTALL NEW 24VDC POWER SUPPLY IN PLC-3 OR UTILIZE EXISTING PLC-3 24VDC POWER SUPPLY TO PROVIDE 24VDC LOOP POWER TO LEVEL INSTRUMENTS FROM PLC-3 PANEL. SWITCH PANEL SHALL ALLOW FOR SWITCHING BETWEEN EXISTING SUBMERSIBLE LEVEL TRANSDUCER AND LIT-0600. PROVIDE FIELD SURGE SUPPRESSORS AS REQUIRED BY SPEC. SECTION 17565.

REV	ISSUED FOR	DATE	BY
1	BID SET	8/6/18	GAB

PROJECT ENGINEER:	G.A.B.
DESIGNED BY:	K.R.D.
DRAWN BY:	K.R.D.
CHECKED BY:	G.A.B.

IF THIS BAR DOES NOT MEASURE 1" THEN DRAWING IS NOT TO FULL SCALE 0 1/2" 1"

KEITH R. DINNEN
NO. 78757

KEITH R. DINNEN LICENSE 08/07/2018 No. 78757 STATE OF FLORIDA PROFESSIONAL ENGINEER

Hazen

HAZEN AND SAWYER
4000 HOLLYWOOD BOULEVARD, SUITE 750N
HOLLYWOOD, FLORIDA 33021
CERTIFICATE OF AUTHORIZATION NO. : 2771

CITY OF HALLANDALE BEACH

WATER TREATMENT PLANT
HIGH SERVICE PUMP REPLACEMENT

Hallandale Beach

HIGH SERVICE PUMP STATION
P&I D

DATE:	AUGUST 2018
HAZEN NO.:	40621-000
CONTRACT NO.:	1
DRAWING NUMBER:	I-03

BID SET

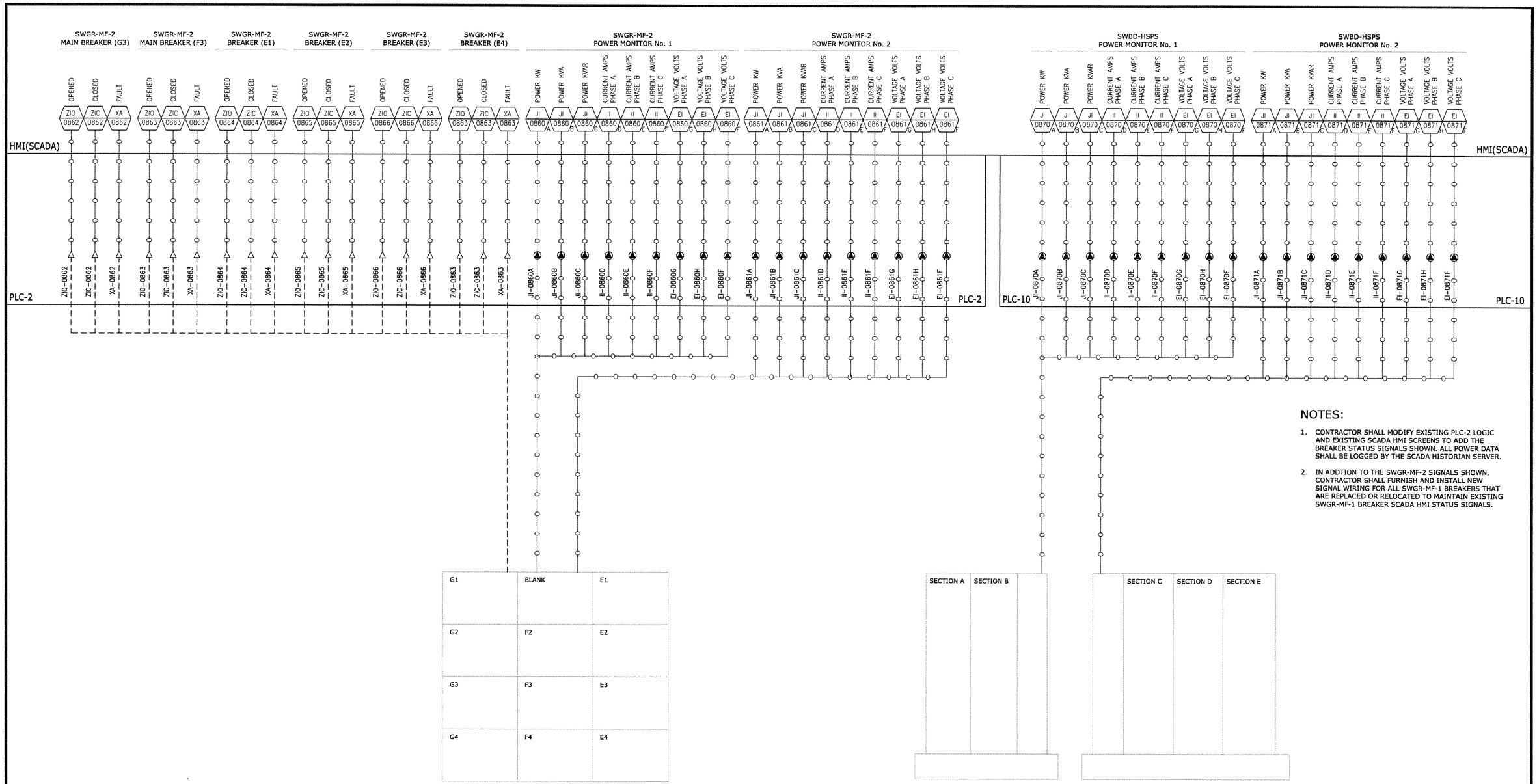

NOTES:

1. CONTRACTOR SHALL MODIFY EXISTING PLC-2 LOGIC AND EXISTING SCADA HMI SCREENS TO ADD THE BREAKER STATUS SIGNALS SHOWN. ALL POWER DATA SHALL BE LOGGED BY THE SCADA HISTORIAN SERVER.
2. IN ADDTION TO THE SWGR-MF-2 SIGNALS SHOWN, CONTRACTOR SHALL FURNISH AND INSTALL NEW SIGNAL WIRING FOR ALL SWGR-MF-1 BREAKERS THAT ARE REPLACED OR RELOCATED TO MAINTAIN EXISTING SWGR-MF-1 BREAKER SCADA HMI STATUS SIGNALS.

REV	ISSUED FOR	DATE	BY
1	BID SET	8/6/18	GAB

PROJECT ENGINEER:	G.A.B.
DESIGNED BY:	K.R.D.
DRAWN BY:	K.R.D.
CHECKED BY:	G.A.B.

IF THIS BAR DOES NOT MEASURE 1" THEN DRAWING IS NOT TO FULL SCALE 0 1/2" 1"

KEITH R. DINNEN
NO. 78757

KEITH R. DINNEN LICENSE No. 78757 STATE OF FLORIDA PROFESSIONAL ENGINEER 08/07/2018

Hazen

HAZEN AND SAWYER
4000 HOLLYWOOD BOULEVARD, SUITE 750N
HOLLYWOOD, FLORIDA 33021
CERTIFICATE OF AUTHORIZATION NO. : 2771

CITY OF HALLANDALE BEACH

WATER TREATMENT PLANT
HIGH SERVICE PUMP REPLACEMENT

Hallandale Beach

SWGR-MF-2 AND SWBD-HSPS
P&ID

DATE:	AUGUST 2018
HAZEN NO.:	40621-000
CONTRACT NO.:	1
DRAWING NUMBER:	I-04

BID SET

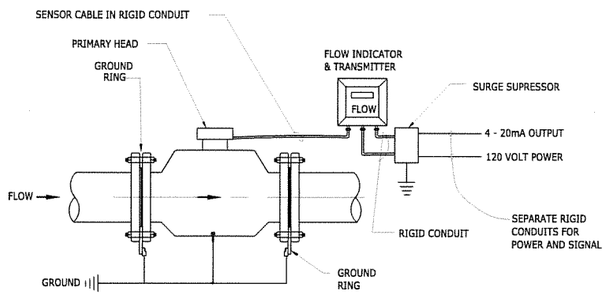

NOTE:
STRAIGHT INLET RUN MINIMUM OF 5x DIAMETER AND OUTLET RUN MINIMUM OF 2x DIAMETER
FOLLOW MANUFACTURER'S INSTALLAION INSTRUCTIONS

MAGNETIC FLOW METER

DETAIL STD
N.T.S. –

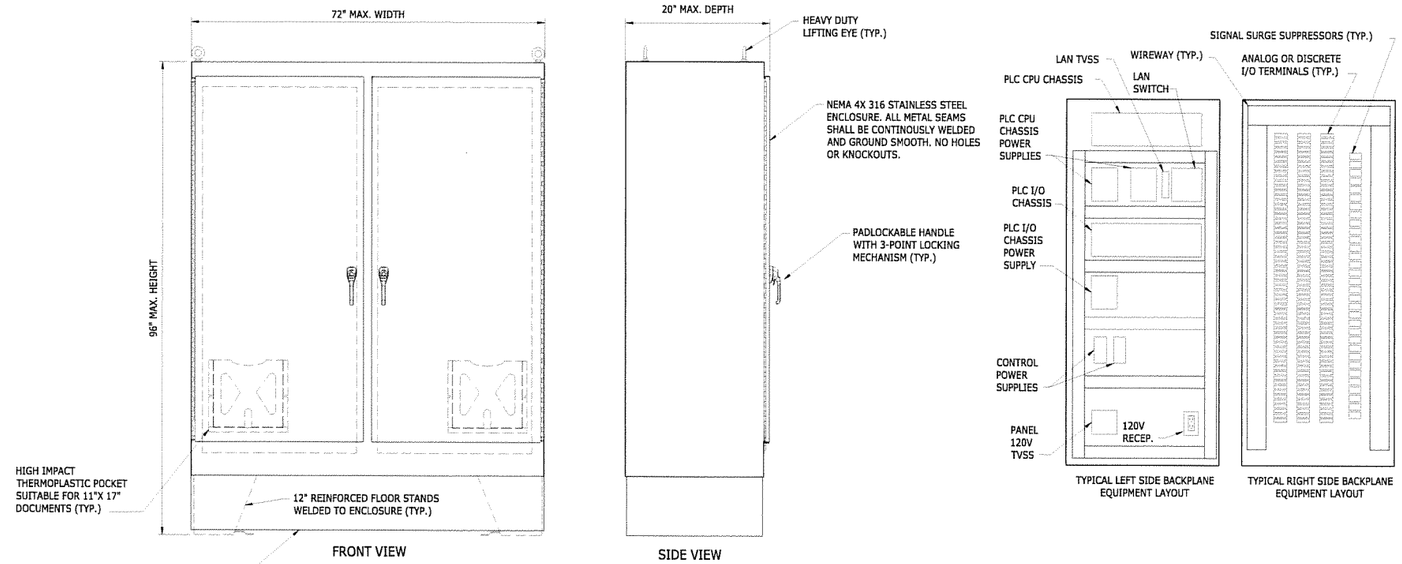

MCP–HSPS (PLC–10) ENCLOSURE DIMENSIONS AND LAYOUT
N.T.S.

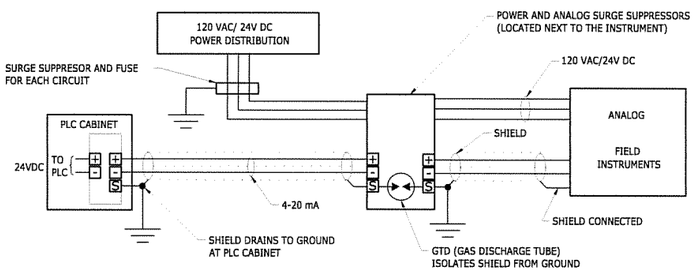

4–WIRE FIELD TRANSMITTERS (AC AND DC)

DETAIL STD
N.T.S. –

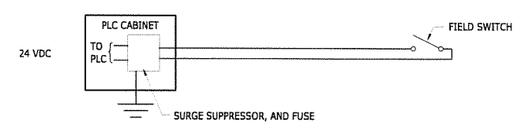

DISCRETE PLC/INPUT CIRCUIT

DETAIL STD
N.T.S. –

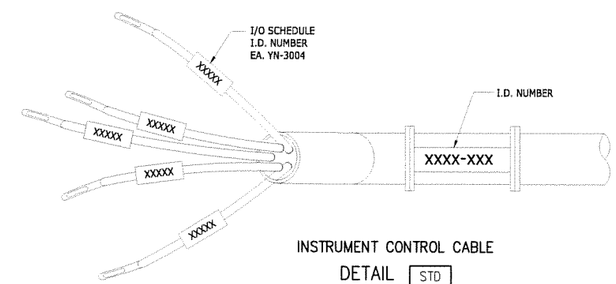

INSTRUMENT CONTROL CABLE

DETAIL STD
N.T.S. –

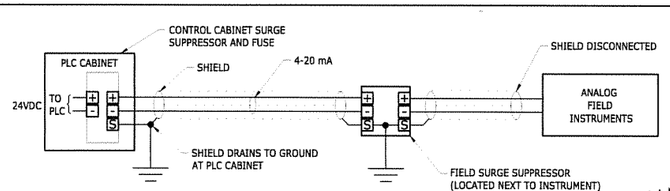

2–WIRE FIELD TRANSMITTERS (DC)

DETAIL STD
N.T.S. –

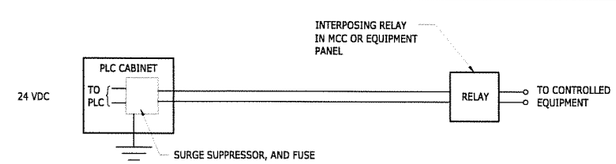

DISCRETE PLC/OUTPUT CIRCUIT

DETAIL STD
N.T.S. –

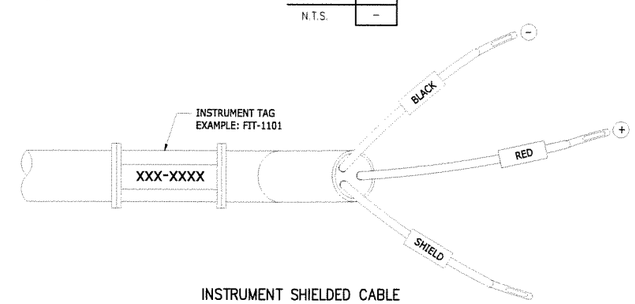

INSTRUMENT SHIELDED CABLE

DETAIL STD
N.T.S. –

KEITH R. DINNEN
LICENSE
08/07/2018
No. 78757
STATE OF FLORIDA
PROFESSIONAL ENGINEER

REV	ISSUED FOR	DATE	BY
1	BID SET	8/6/18	GAB

PROJECT ENGINEER:	G.A.B.
DESIGNED BY:	K.R.D.
DRAWN BY:	K.R.D.
CHECKED BY:	G.A.B.

IF THIS BAR DOES NOT MEASURE 1" THEN DRAWING IS NOT TO FULL SCALE 0 1/2" 1"

KEITH R. DINNEN
NO. 78757

Hazen
HAZEN AND SAWYER
4000 HOLLYWOOD BOULEVARD, SUITE 750N
HOLLYWOOD, FLORIDA 33021
CERTIFICATE OF AUTHORIZATION NO. : 2771

CITY OF HALLANDALE BEACH

WATER TREATMENT PLANT
HIGH SERVICE PUMP REPLACEMENT

Hallandale Beach

INSTRUMENTATION DETAILS

DATE:	AUGUST 2018
HAZEN NO.:	40621-000
CONTRACT NO.:	1
DRAWING NUMBER:	I-05

BID SET

SYMBOLS

- GATE VALVE
- CHECK VALVE
- AUTOMATIC CONTROL VALVE 2-WAY
- AUTOMATIC CONTROL VALVE 3-WAY
- SOLENOID OPERATED VALVE
- GLOBE VALVE
- BALL VALVE
- BUTTERFLY VALVE
- COMBINATION BALANCING COCK & FLOW SENSOR
- TRIPLE DUTY VALVE (STRAIGHT, ANGLE PATTERN)
- PIPING ELBOW, 90 TURNED DOWN
- PIPING ELBOW, 90 TURNED UP
- PIPING TEE, OUTLET TURNED DOWN
- PIPING TEE, OUTLET TURNED UP
- PRESSURE GAGE WITH SHUTOFF COCK (BALL VALVE)
- THERMOMETER
- T/S — THERMOSTAT/SENSOR
- SUPPLY AIR DUCT SECTION-UP
- SUPPLY AIR DUCT SECTION-DOWN
- RETURN AIR DUCT SECTION-UP
- RETURN AIR DUCT SECTION-DOWN
- EXHAUST AIR DUCT SECTION-UP
- EXHAUST AIR DUCT SECTION-DOWN
- M — MOTORIZED DAMPER
- 2 FD — FIRE DAMPER WITH ACCESS DOOR
- # HOUR RATED WALL (2 HR. SHOWN)
- 2 FSD — FIRE/SMOKE DAMPER WITH ACCESS DOOR
- # HOUR RATED WALL (2 HR. SHOWN)
- VD — MANUAL VOLUME DAMPER
- BD — BACKDRAFT DAMPER
- SLOPE — CHANGE OF ELEVATION: RISE (R) OR DROP (D)

(*)(*)(*)-AHU-1
- QUANTITY DESIGNATION
- EQUIPMENT DESIGNATION
- BUILDING DESIGNATION WHEN APPLICABLE

SR1 — SUPPLY AIR REGISTER
- SUPPLY AIR REGISTER (TYPE 1)
- SUPPLY AIR REGISTER (TYPE 2), ETC.

RR1 — RETURN AIR REGISTER (TYPE 1)

ER1 — EXHAUST AIR REGISTER (TYPE 1)

20X10 SR1 — 20X10 NECK SIZE, SUPPLY REGISTER (TYPE 1)
1000 CFM — 1000 CUBIC FEET PER MINUTE AIRFLOW RATE

24X24 CDA — CEILING DIFFUSER (TYPE A)
8-300
- LOUVERED FACE SIZE
- CUBIC FEET PER MINUTE AIRFLOW RATE SETTING (MAX)
- NECK DIAMETER

SHADED SECTION OF CEILING DIFFUSER INDICATES INACTIVE PANELS

2 — DOOR LOUVER NUMBER INDICATES SIZE SQ FT

LINETYPES

RL	REFRIGERANT LIQUID		
RS	REFRIGERANT SUCTION	FOS	FUEL OIL SUPPLY
HWS	HOT WATER SUPPLY LINE	FOR	FUEL OIL RETURN
HWR	HOT WATER RETURN LINE	FOG	FUEL OIL GAUGE
V	VENT	FOV	FUEL OIL VENT
CW	COLD WATER	NG	NATURAL GAS
HPS	HIGH PRESSURE STEAM	CWS	CHILLED WATER SUPPLY
LPS	LOW PRESSURE STEAM	CWR	CHILLED WATER RETURN
CR	CONDENSATE RETURN	CF	CHEMICAL FEED
MU	MAKE UP WATER	C	CONDENSER WATER SUPPLY
D	DRAIN	CR	CONDENSER WATER RETURN

ABBREVIATIONS

AC	AIR CONDITIONING, AIR CONDITIONING UNIT	OA	OUTSIDE AIR
ACCU	AIR COOLED CONDENSING UNIT	OAI	OUTSIDE AIR INTAKE
ACC	AIR COOLED CONDENSER	ORP	OXYGEN REDUCTION POTENTIAL
AD	ACCESS DOOR	P	PUMP
AFF	ABOVE FINISHED FLOOR	PC	PLUMBING CONTRACTOR
AFUE	ANNUAL FUEL UTILIZATION EFFICIENCY	PD	PRESSURE DROP
AHU	AIR HANDLING UNIT	PF	PROPELLER FAN
APD	AIR PRESSURE DROP	PH, ø	PHASE
ATC	AUTOMATIC TEMPERATURE CONTROL	PPU	POSITIVE PRESSURIZATION UNIT
ATU	AIR TERMINAL UNIT	PROP	PROPELLER
B	BOILER	PRV	PRESSURE REGULATING VALVE
BD	GRAVITY BACKDRAFT DAMPER	PTAC	PACKAGED TERMINAL AIR CONDITIONING UNIT
BFP	BACKFLOW PREVENTER	PS	PRESSURE SENSOR
BHP	BRAKE HORSEPOWER	PW	POTABLE WATER
BOD	BOTTOM OF DUCT	RA	RETURN AIR
BOR	BOTTOM OF REGISTER	RH	RELATIVE HUMIDITY
BOT	BOTTOM	RL	REFRIGERANT LIQUID
CB	CIRCUIT BREAKER	RLA	RATED LINE AMPS
CFM	CUBIC FEET OF STANDARD AIR PER MINUTE	RS	REFRIGERANT SUCTION
CH	CABINET UNIT HEATER	RPM	REVOLUTIONS PER MINUTE
CLG	CEILING	SA	SUPPLY AIR
CONN	CONNECTION	SD	SMOKE DETECTOR
CWS	CHILLED WATER SUPPLY	SF	SUPPLY AIR FAN
CWR	CHILLED WATER RETURN	SHR	SENSIBLE HEAT RATIO
DB	DRY BULB	SP	STATIC PRESSURE
DDC	DIRECT DIGITAL CONTROL	SPEC	SPECIFICATION
DX	DIRECT EXPANSION REFRIGERANT	SS	STAINLESS STEEL
DIA, ø	DIAMETER	SV	SOLENOID VALVE
DM	DAMPER MOTOR	TEMP	TEMPERATURE
DN	DOWN	TF	TRANSFER FAN
EA	EXHAUST AIR	TH	TOTAL HEAT
EC	ELECTRICAL CONTRACTOR	TOD	TOP OF DUCT
EAT	ENTERING AIR TEMPERATURE	TOU	TOP OF UNIT
EDH	ELECTRIC DUCT HEATER	TOR	TOP OF REGISTER
EUH	ELECTRIC UNIT HEATER	TSP	TOTAL STATIC PRESSURE
EF	EXHAUST FAN	TS	TEMPERATURE SENSOR
EL/ELEV	ELEVATION	TYP	TYPICAL
ES	ENTHALPY SENSOR	UH	UNIT HEATER
ESP	EXTERNAL STATIC PRESSURE	V	VOLTS
ET	EXPANSION TANK	VAV	VARIABLE AIR VOLUME
EWT	ENTERING WATER TEMPERATURE	VD	VOLUME DAMPER
FA	FREE AREA	VEL	VELOCITY
FC	FORWARD CURVED OR FAN COIL	VH	HEATING CONTROL VALVE
FD	FIRE DAMPER WITH ACCESS DOOR	VC	COOLING CONTROL VALVE
FLA	FULL LOAD AMPS	VFD	VARIABLE FREQUENCY DRIVE
FOR	FUEL OIL RETURN	VVT	VARIABLE VOLUME AND VARIABLE TEMPERATURE
FOS	FUEL OIL SUPPLY	WPD	WATER PRESSURE DROP
FOV	FUEL OIL VENT	W/	WITH
FPM	FEET PER MINUTE	WB	WET BULB
FTR	FINNED TUBE RADIATION	WC	WATER COLUMN
GC	GENERAL CONTRACTOR		
GPM	GALLONS PER MINUTE		
HG	HOT GAS		
HP	HORSEPOWER OR HEAT PUMP		
HV	HEATING AND VENTILATING UNIT		
HWS	HOT WATER SUPPLY		
HWR	HOT WATER RETURN		
IDEC	INDIRECT EVAPORATIVE COOLING		
IN. WG	INCHES OF WATER GAGE		
KW	KILOWATT (1,000 WATTS)		
L1	LOUVER (TYPE 1)		
LAT	LEAVING AIR TEMPERATURE		
LD1	LINEAR DIFFUSER (TYPE 1)		
LF	LINEAR FEET		
LR	LINEAR RETURN		
LWT	LEAVING WATER TEMPERATURE		
MAU	MAKEUP AIR UNIT		
MBH	1,000 BTU PER HOUR		
MC	MECHANICAL CONTRACTOR		
MCA	MINIMUM CIRCUIT AMPACITY		
MD	MOTORIZED DAMPER		
MTD	MOUNTED		
NC	NORMALLY CLOSED, NOISE CRITERIA		
NK	NECK		
NO	NORMALLY OPEN		
NTS	NOT TO SCALE		

DESIGN TEMPERATURE CONDITIONS (DEGREE FAHRENHEIT)

OUTSIDE	HIGH SERVICE PUMP ROOM	VFD ROOM
WINTER: 45 Dry Bulb	WINTER: 45 Dry Bulb	WINTER: 70 Dry Bulb
SUMMER: 92 Dry Bulb / 79 Wet Bulb	SUMMER: 92 Dry Bulb / 79 Wet Bulb	SUMMER: 70 Dry Bulb

HVAC GENERAL NOTES

1. DESIGN IS IN ACCORDANCE WITH AND CONSTRUCTION SHALL COMPLY WITH THE PROVISIONS OF THE FLORIDA BUILDING CODE 5TH EDITION (2014).
2. EQUIPMENT SIZES AND LOCATIONS ARE APPROXIMATE. ACTUAL DIMENSIONS TO BE DETERMINED BY EQUIPMENT FURNISHED. COORDINATE HVAC WORK WITH THE WORK OF ALL OTHER TRADES.
3. FINAL OPENING DIMENSIONS, CONCRETE PAD SIZES, AND LOCATIONS MUST BE COORDINATED DURING CONSTRUCTION WITH ACCEPTED SHOP DRAWINGS.
4. FINAL SIZES OF FLOOR/ROOF/WALL OPENINGS, DUCT PLENUMS, TRANSITIONS AND PIPING CONNECTIONS TO ALL EQUIPMENT SHALL BE DETERMINED BY EQUIPMENT FURNISHED.
5. THE DRAWINGS ARE SCHEMATIC IN NATURE AND SHOW INTENDED GENERAL LOCATION OF HVAC EQUIPMENT AND SYSTEMS. NOT ALL OFFSETS AND REQUIRED FITTINGS FOR ACTUAL FIELD INSTALLATION ARE INTENDED TO BE SHOWN FOR INSTALLATION OF SYSTEMS IN THE SPACE AVAILABLE IN CONSIDERATION OF WORK OF OTHER TRADES AND FIELD CONDITIONS. CONTRACTOR SHALL PROVIDE ADDITIONAL OFFSETS IN DUCTWORK AND PIPING AS REQUIRED TO AVOID SUCH INTERFERENCES OR FIELD CONDITIONS AT NO ADDITIONAL COST TO THE ORIGINAL CONTRACT AMOUNT.
6. COORDINATE THE REQUIREMENTS FOR HVAC OPENINGS AND SLEEVES IN BUILDING ELEMENTS WITH THE GENERAL CONTRACTOR.
7. CONTRACTOR SHALL REFER TO SPECIFICATION SECTION 09900 FOR PAINTING REQUIREMENTS UNLESS OTHERWISE NOTED.
8. REFER TO ELECTRICAL DRAWINGS OR SPECIFICATIONS FOR INTERLOCKING WIRING REQUIREMENTS.
9. PROVIDE ADEQUATE SUPPORT, PER THE MANUFACTURER'S RECOMMENDATIONS, FOR ALL HVAC EQUIPMENT.
10. CONTRACTOR SHALL BE RESPONSIBLE FOR CHECKING ELECTRICAL RATINGS FROM CERTIFIED DRAWINGS OF EQUIPMENT AND SHALL MAKE ANY BRANCH CIRCUIT DISTRIBUTION MODIFICATION REQUIREMENTS WITHOUT ANY ADDITIONAL COST TO OWNER. THE CONTRACTOR SHALL SUBMIT A SCHEDULE OF SUCH CHANGES FOR APPROVAL BY ENGINEER.
11. WHEREVER THE REQUIREMENTS AND REGULATIONS OF STATE, FEDERAL AND LOCAL AUTHORITIES HAVING JURISDICTION DIFFER FROM THE DRAWINGS OR SPECIFICATIONS, THEY SHALL TAKE PRECEDENCE AND SHALL BE MADE PART OF THE CONTRACT (EXCEPT WHERE THE DRAWINGS OR SPECIFICATIONS ARE MORE STRINGENT).
12. THERMOSTATS, SENSORS, AND/OR CONTROL PANEL LOCATIONS SHOWN ARE APPROXIMATE AND SHALL BE COORDINATED TO SUIT FIELD CONDITIONS.
13. INSTALL WALL MTD SENSORS, CONTROLS AND THERMOSTATS 4'-0" ABOVE FINISHED FLOOR UNLESS OTHERWISE NOTED. ALIGN WITH OTHER NEARBY ITEMS SUCH AS LIGHT SWITCHES. DO NOT INSTALL CLOSER THAN 6-INCHES FROM EDGE OF DOOR FRAME OR CORNER OF WALL. WHERE CONFLICTS MAY OCCUR WITH ITEMS SUCH AS LIGHT SWITCHES, MOUNT THE SENSOR OR CONTROL DEVICE 4'-6" ABOVE FINISHED FLOOR CENTERED ABOVE THE LIGHT SWITCH.
14. COORDINATE THE LOCATIONS OF HVAC ITEMS EXPOSED IN FINISHED SPACES WITH ARCHITECTURAL FEATURES INDICATED ON THE DRAWINGS.
15. PROVIDE ADEQUATE MEANS OF ACCESS CLEARANCE FOR ALL HVAC/MECHANICAL EQUIPMENT AND SYSTEMS THAT REQUIRE ACCESS FOR PROPER OPERATION, MAINTENANCE AND REPAIR PER RECOMMENDED MANUFACTURER CLEARANCES.
16. HVAC CONTRACTOR SHALL PROVIDE ALL FIRE STOPPING AND PIPE SLEEVES FOR ALL PIPE AND DUCT PENETRATIONS THRU FIRE RATED BUILDING ASSEMBLIES.
17. CONTRACTOR SHALL OBTAIN AND PAY ALL FEES RELATED TO PERMITTING, AND INSPECTIONS.
18. FOR ADDITIONAL REQUIREMENTS SEE SPECIFICATIONS.

FLORIDA BUILDING CODE, ENERGY CONSERVATION CODE EXEMPTION

THIS IS AN UNOCCUPIED EQUIPMENT PROCESS BUILDING. THE AIR CONDITIONING SYSTEM IS DESIGNED FOR EQUIPMENT COOLING. IT IS NOT DESIGNED FOR HUMAN OCCUPANCY OR COMFORT. NO OPERATORS WORK IN THIS BUILDING ON A REGULAR BASIS. HEATING IS NOT PROVIDED. THIS BUILDING IS EXEMPT FROM COMPLIANCE WITH THE FLORIDA BUILDING CODE 5TH EDITION (214) ENERGY CONSERVATION PER ARTICLE C101.4.8.4 EXCEPT THAT PROVISIONS OF SECTION C405 SHALL APPLY.

REV	ISSUED FOR	DATE	BY
1	BID SET	08-06-18	G.B.

PROJECT ENGINEER:
DESIGNED BY: R.A.V
DRAWN BY: R.A.V
CHECKED BY:

IF THIS BAR DOES NOT MEASURE 1" THEN DRAWING IS NOT TO FULL SCALE (0 1/2" 1")

NORMAN E. BARTLEY LICENSED No 82112 STATE OF FLORIDA PROFESSIONAL ENGINEER
NORMAN BARTLEY, PE NO. 82112

Hazen
HAZEN AND SAWYER
4000 HOLLYWOOD BOULEVARD, SUITE 750N
HOLLYWOOD, FLORIDA 33021
CERTIFICATE OF AUTHORIZATION NO. : 2771

CITY OF HALLANDALE BEACH

WATER TREATMENT PLANT
HIGH SERVICE PUMP REPLACEMENT

Hallandale Beach

HVAC NOTES AND SCHEDULES

DATE: AUGUST 2018
HAZEN NO.: 40621-000
CONTRACT NO.: 1
DRAWING NUMBER: H-01

RTA SEPT

File: C:\BWS\WA20J-PW\W0454279\H-01 Saved By: JJOHNSON Save Date: 2018/08/06 10:25 AM
PLOT DATE: 2018/08/06 10:32:52 AM BY: JJOHNSON

LOUVER SCHEDULE

MARK	QTY	BUILDING	MANUFACTURER	MODEL NO.	MATERIAL	LOUVER TYPE	FRAME		MASONRY OPENING		DAMPER		DESIGN WIND PRESSURE		FREE AREA (SQFT)	AIR FLOW (CFM)	STATIC PRESSURE DROP (IN WG)	FREE AREA VELOCITY (FPM)	OPTIONS					NOTES
							FINISH	DEPTH	WIDTH	HEIGHT	GRAVITY	FIRE	+ (PSF)	- (PSF)					BIRD SCREEN	INSECT SCREEN	SECURITY BARS	FILTER	PERIMETER FLANGE	
HS-L-1	2	HIGH SERVICE PUMP ROOM	RUSKIN	EME520MD	ALUMINUM	INTAKE, DRAINABLE, COMBINATION LOUVER	KYNAR	6"	4'-0"	6'-0"			55.0	55.0	11.77	13,440	0.15	1,250	X					1,2
HS-L-2	2	HIGH SERVICE PUMP ROOM	RUSKIN	EME520MD	ALUMINUM	EXHAUST, DRAINABLE, COMBINATION LOUVER	KYNAR	6"	4'-0"	6'-0"			55.0	55.0	11.77	13,440	0.15	1,250	X					1,2

NOTES:
1. MANUAL LOCKING QUADRANT HURRICANE DAMPER
2. MULLION BETWEEN LOUVERS

AIR HANDLING UNIT SCHEDULE

MARK No.	LOCATION	AREA SERVED	MANUFACTURER	MODEL No.	*CAPACITY BTU/HR		FAN DATA				EER/IEER	FILTER		ELECTRIC HEAT		ELECTRIC			WEIGHT LBS.	NOTES
					TOTAL	SENSIBLE	RPM/BHP	CFM	H.P.	E.S.P.		NUMBER	SIZE INCHES	STAGES	K.W.	MCA	OPD	V/P/HZ		
HS-AHU-1	ELECTRICAL ROOM	ELECTRICAL ROOM	DAIKIN	FTX36LVJU	36,000	22,890	VARIES/0.1	770	1/8	0.1	8.35/17.9	1	WASHABLE	-	-	-	-	208/1/60	39	1,2
HS-AHU-2	ELECTRICAL ROOM	ELECTRICAL ROOM	DAIKIN	FTX36LVJU	36,000	22,890	VARIES/0.1	770	1/8	0.1	8.35/17.9	1	WASHABLE	-	-	-	-	208/1/60	39	1,2
HS-AHU-3	ELECTRICAL ROOM	ELECTRICAL ROOM	DAIKIN	FTX36LVJU	36,000	22,890	VARIES/0.1	770	1/8	0.1	8.35/17.9	1	WASHABLE	-	-	-	-	208/1/60	39	1,2
HS-AHU-4	ELECTRICAL ROOM	ELECTRICAL ROOM	DAIKIN	FTX36LVJU	36,000	22,890	VARIES/0.1	770	1/8	0.1	8.35/17.9	1	WASHABLE	-	-	-	-	208/1/60	39	1,2

* 67° F EWB, 80° F EDB AND 95° F DB / 75° F WB AMBIENT

NOTES:
1. WIRED REMOTE CONTROLLER
2. INLINE CONDENSATE PUMP

AIR COOLED CONDENSING SCHEDULE

MARK No.	LOCATION	AREA SERVED	MANUFACTURER	MODEL No.	*CAPACITY BTU/HR		SEER	EER	MIN. AMBIENT TEMP.	MAX. AMBIENT TEMP.	AIRFLOW CFM	SOUND POWER dB.	REFRIGERANT	ELECTRIC			WEIGHT LBS.	NOTES
					TOTAL	SENSIBLE								MCA	OPD	V/P/HZ		
HS-CU-1	ELECTRICAL ROOM	ELECTRICAL ROOM	DAIKIN	RKS36LVJU	36,000	22,890	17.9	8.35	0° F	115° F	2,627	68	R-410A	19.5	20	208/1/60	355	1,2,3
HS-CU-2	ELECTRICAL ROOM	ELECTRICAL ROOM	DAIKIN	RKS36LVJU	36,000	22,890	17.9	8.35	0° F	115° F	2,627	68	R-410A	19.5	20	208/1/60	355	1,2,3
HS-CU-3	ELECTRICAL ROOM	ELECTRICAL ROOM	DAIKIN	RKS36LVJU	36,000	22,890	17.9	8.35	0° F	115° F	2,627	68	R-410A	19.5	20	208/1/60	355	1,2,3
HS-CU-4	ELECTRICAL ROOM	ELECTRICAL ROOM	DAIKIN	RKS36LVJU	36,000	22,890	17.9	8.35	0° F	115° F	2,627	68	R-410A	19.5	20	208/1/60	355	1,2,3

* 67° F EWB, 80° F EDB AND 95° F DB / 75° F WB AMBIENT

NOTES:
1. WIRED REMOTE CONTROLLER
2. 5 YEAR COMPRESSOR WARRANTY
3. WIND BAFFLE

FAN SCHEDULE

MARK No.	LOCATION	AREA SERVED	SERVICE	SYSTEM	TYPE	DRIVE TYPE	FAN SPEED	AIRFLOW CFM	STATIC PRESS.	SOUND SONES	MOTOR HP	MOTOR BHP	MOTOR TYPE	VOLTAGE	CONTROL	WEIGHT	MANUFACTURER	MODEL NUMBER	NOTES
HS-EF-1	HIGH SERVICE PUMP ROOM	HIGH SERVICE PUMP ROOM	DUTY	EXHAUST	PROPELLER	BELT	715	26,880	0.42"	66	5	5.72	TEFC	480/3/60	HOA	230	GREENHECK	SBE-2H42	1,2,3,4,5,6,7,8,9

NOTES:
1. PROVIDE COMBINATION DISCONNECT SWITCH/STARTER, SUPPLIED BY ELECTRICAL CONTRACTOR, COORDINATED BY VENTILATION CONTRACTOR.
2. PROVIDE PREMIUM EFFICIENCY TEFC ELECTRIC MOTOR WITH THERMAL OVERLOADS. ELECTRIC MOTOR WITH 1.5 SERVICE FACTOR.
3. FAN SHALL COMPLY WITH UL-705 "STANDARD FOR POWER VENTILATORS".
4. HEAVY GAUGE ALUMINUM HOUSING, BACKWARD INCLINED ALUMINUM, WITH SERVICE SWITCH NEMA 3R TOGGLE - JUNCTION BOX FACTORY MOUNTED AND WIRED, ENTIRE FAN AND HOUSING ASSEMBLY AND ACCESSORIES AND ROOF CURB WITH "HI-PRO" POLYESTER COATING - COLOR GRAY FOR ENTIRE FAN ASSEMBLY AND FACTORY MOUNTED ACCESSORIES, VARIABLE DRIVE ADJUSTABLE PULLEYS, ALUMINUM BIRD SCREEN, 24-INCH HIGH WIND RATED FACTORY ROOF CURB, BEARINGS WITH GREASE FITTINGS, AND LIFTING LUGS.
5. FAN SHALL BE AMCA SOUND AND AIR PERFORMANCE LABELED.
6. ENTIRE FAN ASSEMBLY SHALL BE DESIGNED TO COMPLY WITH THE FLORIDA BUILDING CODE TO WITHSTAND WIND LOADING BASED ON ASCE-7 DESIGN CRITERIA FOR WORST CASE CONDITIONS IN FLORIDA. SUBMIT SHOP DRAWINGS FOR PERMIT AND REVIEW SIGNED AND SEALED BY THE CONTRACTOR'S FLORIDA REGISTERED PROFESSIONAL ENGINEER.
7. FAN AND LOUVER SHALL BE INSTALLED IN COMPLIANCE WITH MIAMI-DADE NOTICE OF ACCEPTANCE AND SHOP DRAWINGS.
8. FANS SHALL BE CONTROLLED BY A HAND-OFF-AUTO SWITCH. IN THE "HAND" POSITION, THE FAN SHALL RUN CONTINUOUSLY. IN THE "OFF" POSITION, THE FAN WILL NOT RUN. IN THE "AUTO" POSITION, THE FAN SHALL BE CONTROLLED BY A THERMOSTAT.
9. FACTORY SUPPLIED GRAVITY TYPE BACKDRAFT DAMPER, FIELD MOUNTED.

REV	ISSUED FOR	DATE	BY
1	BID SET	08-06-18	G.B.

PROJECT ENGINEER:
DESIGNED BY: R.A.V
DRAWN BY: R.A.V
CHECKED BY:
IF THIS BAR DOES NOT MEASURE 1" THEN DRAWING IS NOT TO FULL SCALE 0 1/2" 1"

NORMAN E. BARTLEY LICENSE No. 82112 STATE OF FLORIDA PROFESSIONAL ENGINEER 8-13-18

NORMAN BARTLEY, PE NO. 82112

Hazen
HAZEN AND SAWYER
4000 HOLLYWOOD BOULEVARD, SUITE 750N
HOLLYWOOD, FLORIDA 33021
CERTIFICATE OF AUTHORIZATION NO. : 2771

CITY OF HALLANDALE BEACH

WATER TREATMENT PLANT
HIGH SERVICE PUMP REPLACEMENT

Hallandale Beach

HVAC NOTES AND SCHEDULES

DATE: AUGUST 2018
HAZEN NO.: 40621-000
CONTRACT NO.: 1
DRAWING NUMBER: H-02

BID SET

File: C:\BWS\WADA-PW\BS45279\V-02 Saved By JJOHNSON Save Date: 2018/08/06 10:26 AM
PLOT DATE: 2018/08/06 10:32:36 AM BY: JJOHNSON

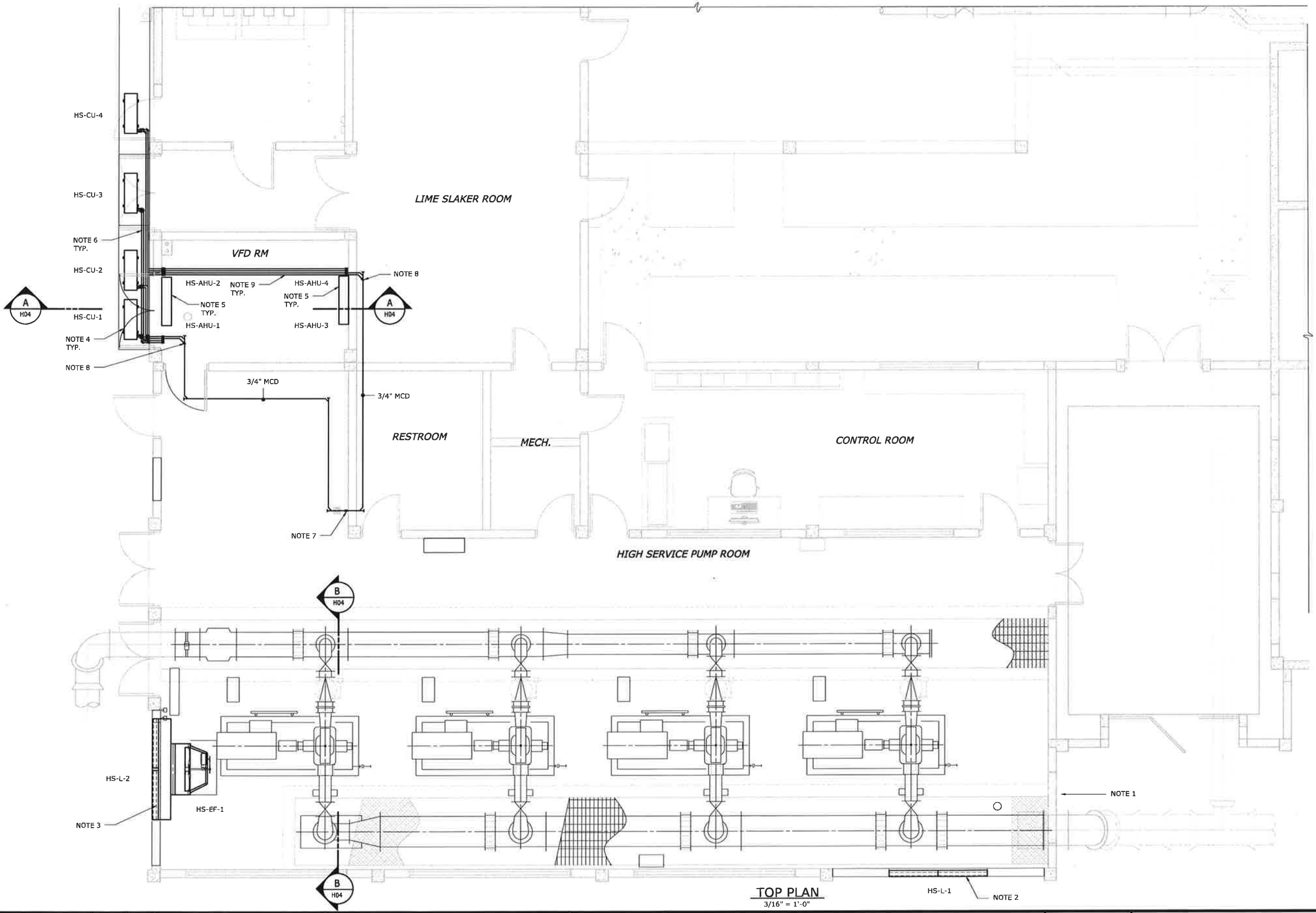

TOP PLAN
3/16" = 1'-0"

NOTES:

1. EXISTING COMBINATION LOUVER TO REMAIN.
2. INSTALL NEW COMBINATION LOUVER IN WALL. REMOVE PORTION OF WALL AS REQUIRED. COORDINATE WITH STRUCTURAL.
3. INSTALL NEW LOUVER IN WALL. REMOVE PORTION OF WINDOW AND WALL AS REQUIRED. PROVIDE 12" DEEP ALUMINUM PLENUM BEHIND LOUVER AND MOUNT EXHAUST FAN TO DISCHARGE INTO PLENUM.
4. MOUNT CONDENSING UNIT ON EXISTING CONCRETE WING. MAINTAIN ALL RECOMMENDED CLEARANCE FOR SERVICE AND OPERATION.
5. MOUNT AIR HANDLING UNIT ON WALL. MAINTAIN ALL RECOMMENDED CLEARANCE FOR SERVICE AND OPERATION.
6. ROUTE REFRIGERANT LINE PER MANUFACTURER'S RECOMMENDATIONS. INSULATE LINE SET AND PROVIDE ALUMINUM INSULATION JACKET.
7. DROP 1" MCD DOWN AND TERMINATE ABOVE EXISTING FLOOR DRAIN WITH 1" AIR GAP.
8. DROP 3/4" CONDENSATE DOWN AND CONNECT TO CONDENSATE LINE FROM UNIT BELOW.
9. AVOID ROUTING REFRIGERANT LINES OR MCD PIPING ABOVE ELECTRICAL EQUIPMENT OR IN DESIGNATED CLEAR AREAS OR ELECTRICAL EQUIPMENT. COORDINATE WITH ELECTRICAL PLANS.

LEGEND:

EXISTING

PROPOSED

1/4"=1'-0"

REV	ISSUED FOR	DATE	BY
1	BID SET	08-06-18	G.B.

PROJECT ENGINEER:
DESIGNED BY: F.A.M.
DRAWN BY: G.K.
CHECKED BY:

IF THIS BAR DOES NOT MEASURE 1" THEN DRAWING IS NOT TO FULL SCALE 0 1/2" 1"

NORMAN E. BARTLEY LICENSED No 82112 STATE OF FLORIDA PROFESSIONAL ENGINEER 8-16-18

NORMAN BARTLEY, PE NO. 82112

Hazen

HAZEN AND SAWYER
4000 HOLLYWOOD BOULEVARD, SUITE 750N
HOLLYWOOD, FLORIDA 33021
CERTIFICATE OF AUTHORIZATION NO. : 2771

CITY OF HALLANDALE BEACH

WATER TREATMENT PLANT
HIGH SERVICE PUMP REPLACEMENT

Hallandale Beach

HVAC PLAN

DATE: AUGUST 2018
HAZEN NO.: 40621-000
CONTRACT NO.: 1
DRAWING NUMBER: H-03

File: C:\PWF\VAZEN-PW\D0184279\V-03 Saved By: JJOHNSON Save Date: 2018/08/06 10:27 AM
PLOT DATE: 2018/08/06 10:33:06 AM BY: JJOHNSON

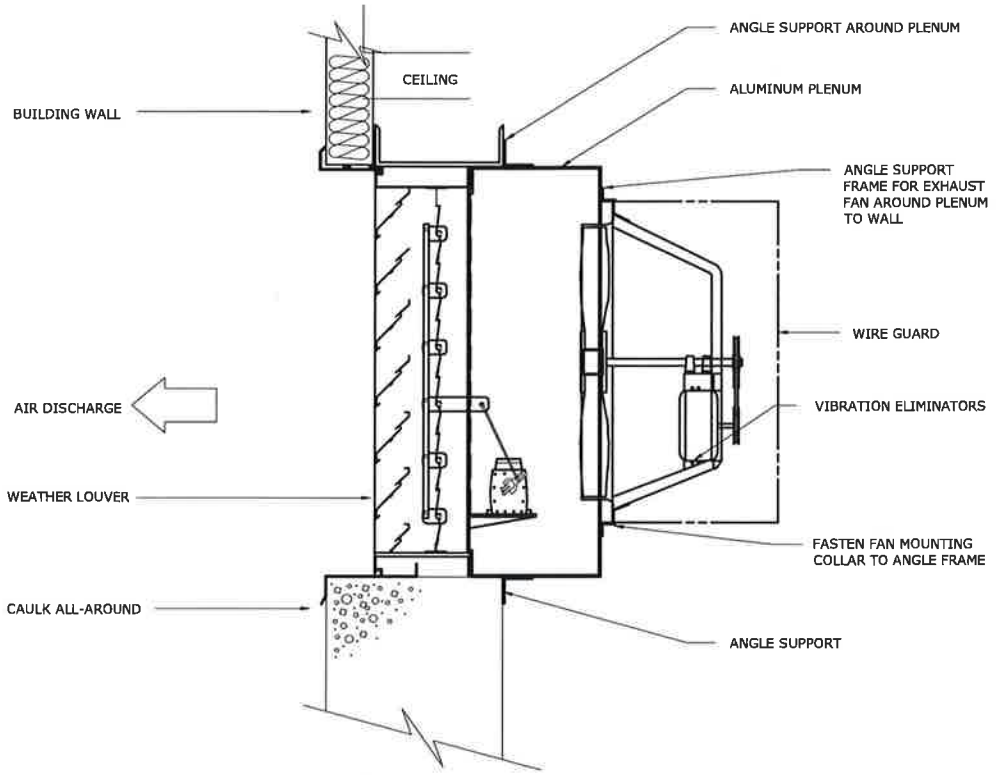

PROPELLER FAN
DETAIL 01 / H04
NO SCALE

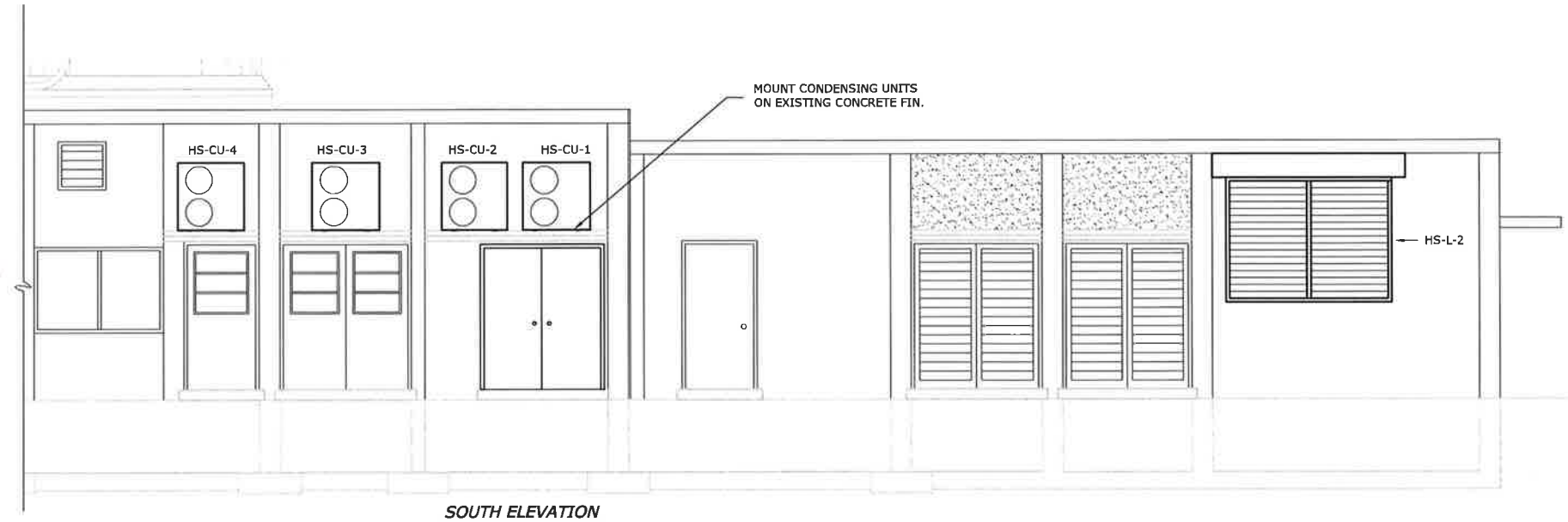

SOUTH ELEVATION
1/4" = 1'-0"

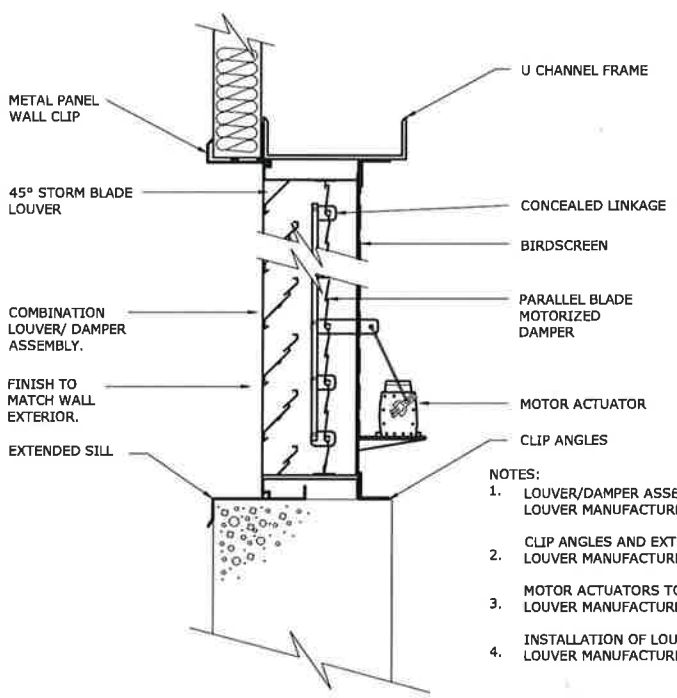

NOTES:
1. LOUVER/DAMPER ASSEMBLIES TO BE ASSEMBLED AT LOUVER MANUFACTURER FACTORY.
2. CLIP ANGLES AND EXTENDED SILL TO BE PROVIDED BY LOUVER MANUFACTURER.
3. MOTOR ACTUATORS TO BE SIZED AND INSTALLED BY LOUVER MANUFACTURER.
4. INSTALLATION OF LOUVER TO BE IN ACCORDANCE WITH LOUVER MANUFACTURER'S RECOMMENDATIONS.

COMBINATION LOUVER/DAMPER
DETAIL 02 / H04
NO SCALE

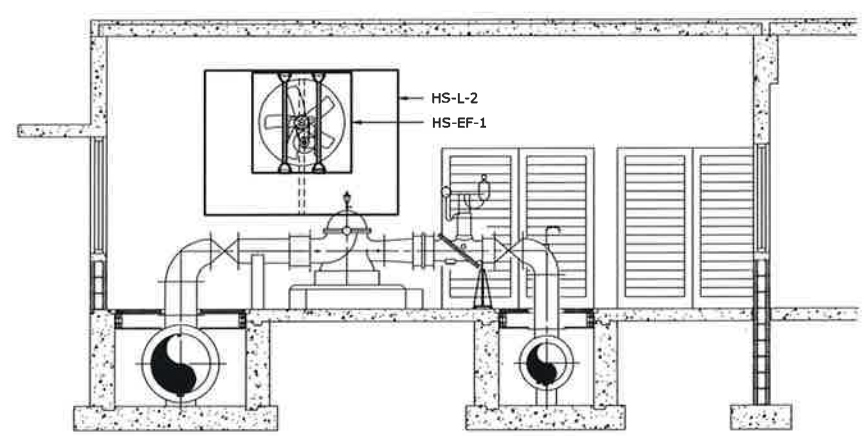

SECTION B / 1
1/4" = 1'-0"

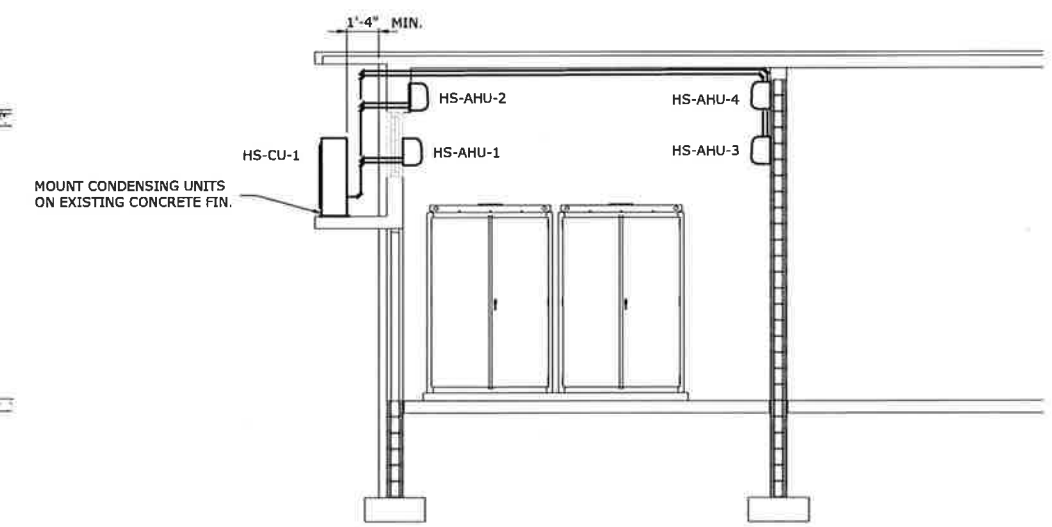

SECTION A / 1
1/4" = 1'-0"

LEGEND:
EXISTING
PROPOSED

1/4"=1'-0" 1 0 1 2 3 7'

REV	ISSUED FOR	DATE	BY
1	BID SET	08-06-18	G.B.

PROJECT ENGINEER:
DESIGNED BY: R.A.V.
DRAWN BY: R.A.V.
CHECKED BY:
IF THIS BAR DOES NOT MEASURE 1" THEN DRAWING IS NOT TO FULL SCALE 0 1/2" 1"

NORMAN E. BARTLEY LICENSE No 82112 STATE OF FLORIDA PROFESSIONAL ENGINEER 8-10-18
NORMAN BARTLEY, PE NO. 82112

Hazen
HAZEN AND SAWYER
4000 HOLLYWOOD BOULEVARD, SUITE 750N
HOLLYWOOD, FLORIDA 33021
CERTIFICATE OF AUTHORIZATION NO. : 2771

CITY OF HALLANDALE BEACH
WATER TREATMENT PLANT
HIGH SERVICE PUMP REPLACEMENT

Hallandale Beach

Elevation - HVAC

DATE: AUGUST 2018
HAZEN NO.: 40621-000
CONTRACT NO.: 1
DRAWING NUMBER: H-04

File: C:\SAFEWADA-PW\04540370\H-04 Saved By: JOHNSON Save Date: 2018/08/06 10:28 AM
Plot Date: 2018/08/06 10:33:16 AM By: JOHNSON