SHEET NO.
CVR

PUMP STATION NO. 8 REPLACEMENT

FINAL DESIGN PLANS

CITY OF HALLANDALE BEACH
BROWARD COUNTY, FL

PROJECT LOCATION

LOCATION MAP

SECTION 27, TOWNSHIP 51 SOUTH, RANGE 42 EAST

PREPARED FOR:

CITY OF HALLANDALE BEACH

Index

Sheet Number	Sheet Description	Sheet Title	REV #
01	CVR	COVER SHEET	
02	GN	GENERAL NOTES & SPECIFICATIONS	
03	SDP	SITE DEMOLITION PLAN	
04	SP	SITE PLAN	
05	D-1	PUMP STATION DETAILS	
06	D-2	PUMP STATION DETAILS	
07	D-3	PUMP STATION DETAILS	
08	D-4	PUMP STATION DETAILS	
09	D-5	PUMP STATION DETAILS	
10	D-6	PUMP STATION DETAILS	
11	D-7	PUMP STATION DETAILS	
12	D-8	PUMP STATION DETAILS	
13	OS	OFF-SITE IMPROVEMENTS	
14	E-1	ELECTRICAL GENERAL NOTES	
15	E-2	LIFT STATION ELECTRICAL LEGEND	
16	E-3	ELECTRICAL DEMO SITE PLAN	
17	E-4	ELECTRICAL SITE PLAN	
18	E-5	ELECTRICAL ONE LINE & RISER DIAGRAM	
19	E-6	ELECTRICAL SCHEMATIC	
20	E-7	ELECTRICAL SCHEMATIC	
21	E-8	ELECTRICAL VFD CABINET DETAILS	
22	E-9	ELECTRICAL RTU DETAILS	
23	E-10	ELECTRICAL CONTROL PANEL DETAILS	
24	E-11	ELECTRICAL POWER PEDESTAL DETAILS	
25	E-12	ELECTRICAL DETAILS	
26	I-1	P&ID LEGEND AND NOTES	
27	I-2	P&ID	
28	I-3	P&ID DETAILS	

REV. #	DESCRIPTION	DATE

Patrick Gibney

Digitally signed by Patrick Gibney
Date: 2019.08.19 09:18:07 -04'00'

Patrick J. Gibney, State of Florida, Professional Engineer, License No. 49428

This item has been electronically signed and sealed by Patrick J. Gibney, PE On 8/17/2019 using a SHA authentication code.

Printed copies of this document are not considered signed and sealed and the SHA authentication code must be verified on any electronic copies.

Patrick J. Gibney
Florida P.E. No. 49428

CTA PROJECT NUMBER: 17-0039-001-02

CRAVEN • THOMPSON AND ASSOCIATES, INC.
ENGINEERS • PLANNERS • SURVEYORS
3563 N.W. 53RD STREET, FORT LAUDERDALE, FLORIDA 33309
FAX: (954) 739-6409 TEL.: (954) 739-6400
FLORIDA LICENSED ENGINEERING, SURVEYING & MAPPING BUSINESS No. 271
FLORIDA LICENSED LANDSCAPE ARCHITECTURE BUSINESS No. C000114

MATERIAL SHOWN HEREON IS THE PROPERTY OF CRAVEN THOMPSON & ASSOCIATES, INC. AND SHALL NOT BE REPRODUCED IN WHOLE OR IN PART WITHOUT PERMISSION OF CRAVEN THOMPSON & ASSOCIATES, INC. WRITING CRAVEN THOMPSON & ASSOCIATES, INC. COPYRIGHT ©2019

Always call 811 two full business days before you dig
Sunshine811.com

VERTICAL INFORMATION HEREON IS RELATIVE TO THE NORTH AMERICAN VERTICAL DATUM (NAVD88).

I. APPLICABLE CODES

A. ALL CONSTRUCTION AND MATERIALS SHALL CONFORM TO CITY STANDARDS AND SPECIFICATIONS, AND ALL OTHER LOCAL, STATE AND NATIONAL CODES WHERE APPLICABLE. ALL CONSTRUCTION WITHIN FDOT R/W SHALL BE CONSTRUCTED PER FDOT MINIMUM STANDARDS. ALL CONSTRUCTION WITHIN BROWARD COUNTY R/W SHALL BE CONSTRUCTED PER BROWARD COUNTY MINIMUM STANDARDS.

B. ALL CONSTRUCTION SHALL BE DONE IN A SAFE MANNER AND IN STRICT COMPLIANCE WITH ALL THE REQUIREMENTS OF FEDERAL OCCUPATIONAL SAFETY AND HEALTH ACT OF 1970, AS AMENDED AND ALL STATE AND LOCAL SAFETY AND HEALTH REGULATIONS.

C. ALL ELEVATIONS SHOWN ON THE CONSTRUCTION DRAWINGS ARE BASED ON THE NORTH AMERICAN VERTICAL DATUM OF 1988, (N.A.V.D.), UNLESS OTHERWISE NOTED.

D. ALL MATERIALS AND CONSTRUCTION SHALL CONFORM TO CITY, BROWARD COUNTY AND/OR FDOT SPECIFICATIONS (WHICHEVER APPLIES).

E. CITY, BROWARD COUNTY AND/OR FDOT SPECIFICATIONS SHALL DICTATE WHEN IN CONFLICT WITH ANY OF THE FOLLOWING SPECIFICATIONS.

F. CONTRACTOR SHALL BE SOLELY RESPONSIBLE FOR COMPLIANCE WITH THE STATE OF FLORIDA TRENCH SAFETY ACT.

II. PRECONSTRUCTION RESPONSIBILITIES

A. UPON THE RECEIPT OF THE "NOTICE TO PROCEED", THE CONTRACTOR SHALL CONTACT THE ENGINEER OF RECORD AND ARRANGE A PRECONSTRUCTION CONFERENCE TO INCLUDE ALL INVOLVED GOVERNMENTAL AGENCIES, UTILITY OWNERS, THE OWNER AND THE ENGINEER OF RECORD.

B. THE CONTRACTOR SHALL OBTAIN A SUNSHINE STATE ONE CALL OF FLORIDA CERTIFICATION NUMBER AT LEAST 48 HOURS PRIOR TO BEGINNING ANY EXCAVATION, CALL 1-800-432-4770.

C. ALL UTILITY EASEMENTS TO BE SECURED PRIOR TO CONSTRUCTION (IF REQUIRED).

D. LOCATION OF EXISTING FACILITIES AS SHOWN ON CONSTRUCTION DRAWINGS ARE DRAWN FROM AVAILABLE RECORDS. THE ENGINEER ASSUMES NO RESPONSIBILITY FOR THE ACCURACY OF THE FACILITIES SHOWN OR FOR ANY FACILITY NOT SHOWN. THE CONTRACTOR SHALL VERIFY, IF POSSIBLE, THE ELEVATIONS AND LOCATIONS OF EXISTING FACILITIES PRIOR TO CONSTRUCTION. IF AN EXISTING FACILITY IS FOUND TO CONFLICT WITH THE PROPOSED CONSTRUCTION UPON EXCAVATION, THE CONTRACTOR SHALL IMMEDIATELY NOTIFY THE ENGINEER OF RECORD SO THAT APPROPRIATE MEASURES CAN BE TAKEN TO RESOLVE THE PROBLEM.

E. A SEPARATE CALCULATED SITE PLAN WILL BE REQUIRED PRIOR TO CONSTRUCTION TO VERIFY PROPOSED BUILDING, CURB, AND SITE WORK LOCATIONS.

F. AT LEAST TWO (2) DAYS PRIOR TO THE START OF CONSTRUCTION. THE CONTRACTOR SHALL SUBMIT A CGP "NOTICE OF INTENT (N.O.I) TO USE GENERAL PERMIT FOR STORMWATER DISCHARGE FROM CONSTRUCTION ACTIVITIES THAT DISTURB AN ACRE OR MORE OF LAND" FORM (DEP FORM 62-621.300(4)(B)) TO FDEP NOTICES CENTER. THE CONTRACTOR WILL BE RESPONSIBLE FOR: (1) IMPLEMENTATION OF A STORMWATER POLLUTION PREVENTION PLAN (SWPPP) THAT IS REQUIRED TO BE DEVELOPED PRIOR TO THE N.O.I. SUBMITTAL, AND (2) RETENTION OF RECORDS REQUIRED BY THE PERMIT, INCLUDING RETENTION OF A COPY OF THE SWPPP AT THE CONSTRUCTION SITE FROM THE DATE OF PROJECT INITIATION TO THE DATE OF FINAL SITE STABILIZATION. A "NOTICE OF TERMINATION (N.O.T.) OF GENERIC PERMIT COVERAGE" FORM (DEP FORM 62-621.300(6)) MUST BE SUBMITTED TO FDEP TO DISCONTINUE PERMIT COVERAGE, SUBSEQUENT TO COMPLETION OF CONSTRUCTION. FOR ADDITIONAL INFORMATION SEE FDEP WEBSITE: http://www.dep.state.fl.us/water/stormwater/npdes. CONTRACTOR SHALL BE RESPONSIBLE TO PREPARE A SWPPP AND SUBMIT TO THE ENGINEER FOR APPROVAL AND COMPLY WITH ALL PROVISIONS OF CHAPTER 62-621.

G. THE CONTRACTOR SHALL BE RESPONSIBLE FOR OBTAINING ALL REQUIRED DEWATERING PERMITS AND TREE REMOVAL / RELOCATION PERMITS.

III. INSPECTIONS

A. THE CONTRACTOR SHALL NOTIFY THE CITY'S ENGINEERING DEPARTMENT, BROWARD COUNTY, THE ENGINEER OF RECORD, FDOT, AND ANY OTHER GOVERNMENTAL AGENCIES HAVING JURISDICTION AT LEAST 24 HOURS PRIOR TO BEGINNING CONSTRUCTION AND PRIOR TO THE INSPECTION OF THE FOLLOWING ITEMS, WHERE APPLICABLE:

1. CLEARING AND FILLING
2. STORM DRAINAGE SYSTEM
3. SANITARY SEWER SYSTEM
4. WATER DISTRIBUTION SYSTEM
5. SUBGRADE
6. LIMEROCK BASE
7. ASPHALTIC CONCRETE / PAVER BRICK COURSE
8. SIDEWALK
9. FINAL

IV. SHOP DRAWINGS

A. PRIOR TO THEIR CONSTRUCTION OR INSTALLATION, SHOP DRAWINGS SHALL BE SUBMITTED TO AND APPROVED BY THE ENGINEER OF RECORD FOR THE FOLLOWING: SANITARY MANHOLES, STORM DRAIN MANHOLES, CATCH BASINS, FIRE HYDRANTS, PIPING, VALVES AND ALL REQUIRED ACCESSORIES. IT IS THE RESPONSIBILITY OF THE CONTRACTOR TO OBTAIN ALL OTHER AGENCY APPROVALS IF REQUIRED.

V. TEMPORARY FACILITIES

A. TEMPORARY FACILITIES:

1. IT SHALL BE THE CONTRACTOR'S RESPONSIBILITY TO ARRANGE FOR OR SUPPLY TEMPORARY WATER SERVICE, SANITARY FACILITIES, TELEPHONE SERVICE AND ELECTRICITY.

B. TRAFFIC REGULATION:

1. MAINTENANCE OF TRAFFIC IN THE PUBLIC RIGHTS-OF-WAY SHALL BE IN ACCORDANCE WITH THE MANUAL ON UNIFORM TRAFFIC CONTROL DEVICES (MUTCD).
2. ALL OPEN TRENCHES AND HOLES ADJACENT TO ROADWAYS OR WALKWAYS SHALL BE PROPERLY MARKED AND BARRICADED TO ASSURE THE SAFETY OF BOTH VEHICULAR AND PEDESTRIAN TRAFFIC.
3. NO TRENCHES OR HOLES NEAR WALKWAYS, IN ROADWAYS OR THEIR SHOULDERS ARE TO BE LEFT OPEN DURING NIGHTTIME HOURS WITHOUT EXPRESS PERMISSION OF THE CITY.
4. IT SHALL BE THE RESPONSIBILITY OF THE GENERAL CONTRACTOR FOR ANY NECESSARY CONSTRUCTION, PAVEMENT MARKING AND SIGNAGE OR ANY PEDESTRIAN SIGNALIZATION AND/OR SIGNAL MODIFICATION TO ACCOMMODATE AN ALTERNATE SAFE WALK ROUTE.

VI. WATER DISTRIBUTION AND/OR SEWAGE FORCE MAIN SYSTEM

A. CITY STANDARDS AND SPECIFICATIONS SHALL GOVERN & SUPERCEDE ALL OTHER REQUIREMENTS FOR WATERMAIN AND/0R FORCE MAIN CONSTRUCTION.

B. SEPARATION OF WATER AND SEWER MAINS

1. SANITARY SEWERS, STORM SEWERS, AND FORCE MAINS SHOULD CROSS UNDER WATER MAINS WHENEVER POSSIBLE. SANITARY SEWERS, STORM SEWERS, AND FORCE MAINS CROSSING WATER MAINS SHALL BE LAID TO PROVIDE A MINIMUM VERTICAL DISTANCE OF 18 INCHES BETWEEN THE INVERT OF THE UPPER PIPE AND THE CROWN OF THE LOWER PIPE WHENEVER POSSIBLE.
2. WHERE SANITARY SEWERS, STORM SEWERS, OR FORCE MAINS MUST CROSS A WATER MAIN WITH LESS THAN 18 INCHES VERTICAL DISTANCE, BOTH THE SEWER AND THE WATER MAIN SHALL BE CONSTRUCTED OF DUCTILE IRON PIPE (DIP) AT THE CROSSING. SUFFICIENT LENGTHS OF DIP MUST BE USED TO PROVIDE A MINIMUM SEPARATION OF 10 FEET BETWEEN ANY TWO JOINTS. ALL JOINTS ON THE WATER MAIN WITHIN 20 FEET OF THE CROSSING MUST BE MECHANICALLY RESTRAINED. A MINIMUM VERTICAL CLEARANCE OF 6 INCHES MUST BE MAINTAINED AT ALL CROSSINGS.
3. ALL CROSSING SHALL BE ARRANGED SO THAT THE SEWER PIPE JOINTS AND THE WATER MAIN PIPE JOINTS ARE EQUIDISTANT FROM THE POINT OF CROSSING (PIPES CENTERED ON THE CROSSING).
4. WHERE A NEW PIPE CONFLICTS WITH AN EXISTING PIPE WITH LESS THAN 18 INCHES VERTICAL CLEARANCE, THE NEW PIPE SHALL BE CONSTRUCTED OF DIP, AND THE CROSSING SHALL BE ARRANGED TO MEET THE REQUIREMENTS ABOVE.
5. A MINIMUM 10-FOOT HORIZONTAL SEPARATION SHALL BE MAINTAINED BETWEEN ANY TYPE OF SEWER AND WATER MAIN IN PARALLEL INSTALLATIONS WHENEVER POSSIBLE.
6. IN CASES WHERE IT IS NOT POSSIBLE TO MAINTAIN A 10 FOOT HORIZONTAL SEPARATION, THE WATER MAIN MUST BE LAID IN A SEPARATE TRENCH OR ON AN UNDISTURBED EARTH SHELF LOCATED ON ONE SIDE OF THE SEWER OR FORCE MAIN AT SUCH AN ELEVATION THAT THE BOTTOM OF THE WATER IS AT LEAST 18 INCHES ABOVE THE TOP OF THE SEWER.
7. WHERE IT IS NOT POSSIBLE TO MAINTAIN A VERTICAL DISTANCE OF 18 INCHES IN PARALLEL INSTALLATIONS, THE WATER MAIN SHALL BE CONSTRUCTED OF DIP AND THE SANITARY SEWER OR THE FORCE MAIN SHALL BE CONSTRUCTED OF DIP WITH A MINIMUM VERTICAL DISTANCE OF 6 INCHES. THE WATER MAIN SHOULD ALWAYS BE ABOVE THE SEWER. JOINTS ON THE WATER MAIN SHALL BE LOCATED AS FAR APART AS POSSIBLE FROM JOINTS ON THE SEWER OR FORCE MAIN (STAGGERED JOINTS).
8. CONTRACTOR SHALL MAINTAIN WATER SERVICE TO ALL EXISTING FACILITIES DURING CONSTRUCTION.

C. MATERIALS:

1. ALL PIPE LARGER THAN 12" DIAMETER MUST BE DUCTILE IRON (MIN. CLASS 50). 8" AND 10" DIP (MIN. CLASS 50) 4" AND 6" DIP (MIN. CLASS 52). ALL DUCTILE IRON PIPE SHALL CONFORM TO THE REQUIREMENTS OF ANSI/AWWA C151/A21.51-02. ALL POTABLE WATER MAIN SHALL BE CEMENT MORTAR LINED AND SEAL COATED PER ANSI/AWWA C104/A21.4-03. SEE CITY AND BROWARD COUNTY STANDARDS & SPECIFICATIONS FOR FURTHER D.I.P. REQUIREMENTS.
2. FITTINGS SHALL BE COMPACT DUCTILE IRON MECHANICAL JOINT TYPE AND SHALL BE CLASS 350 THROUGH 24" CONFORMING TO ANSI/AWWA C-153/A21.53-00 SPECIFICATIONS. POTABLE WATER MAIN FITTINGS MUST BE CEMENT LINED AND SEAL COATED PER ANSI/AWWA C104/A21.4-03.
3. SANITARY SEWER D.I.P. FORCE MAIN AND FITTINGS SHALL HAVE AN INTERIOR COATING OF PROTECTO 401, MINIMUM 40 MILS THICK.
4. WATER DISTRIBUTION VALVES SHALL BE GATE VALVES, IRON BODY, FULLY RESILIENT SEAT BRONZED MOUNTED NON-RISING STEM, RATED AT 150 PSI AND CONFORMING TO ANSI/AWWA C509-01 OR LATEST REVISION, AND SHALL HAVE MECHANICAL JOINTS.
   a. GATE VALVES 4" AND LARGER SHALL BE MUELLER A-2370-20, RESILIENT SEATED GATE VALVES SHALL BE AMERICAN AFR2500 LINE OR CLOW F-6100, CONFORMING TO ANSI/AWWA C500-02. SEE BROWARD COUNTY, AND CITY CONSTRUCTION STANDARDS & SPECIFICATIONS FOR ADDITIONAL REQUIREMENTS.
   b. TAPPING VALVES SHALL BE MUELLER H615 OR APPROVED EQUAL.
   c. GATE VALVES 3" OR LESS SHALL BE NIBCO T-133 OR T-136 WITH MALLEABLE HAND WHEELS. NO SUBSTITUTIONS ALLOWED.
5. SEWAGE FORCE MAIN VALVES SHALL BE ECCENTRIC PLUG VALVES COMPLYING WITH ANSI/NSF 61 AND AWWA C517, LATEST REVISIONS. PLUG VALVES SHALL BE OF THE NON-LUBRICATED, ECCENTRIC TYPE WITH RESILIENT FACED PLUGS. PORT AREAS FOR VALVES SHALL BE MINIMUM 100% OF THE FULL PIPE AREA. THE BODY SHALL BE CAST OR DUCTILE IRON MEETING OR EXCEEDING ASTM A126 OR A536. SEATS SHALL BE WELDED NICKEL ALLOY OR TYPE 316 MINIMUM STAINLESS STEEL. STAINLESS STEEL PLATE SEAT MUST BE LOCKED IN THE BODY CAVITY AND SHALL BE REPLACEABLE THROUGH THE BONNET ACCESS. BEARINGS SHALL BE PERMANENTLY LUBRICATED OF 316 MINIMUM STAINLESS STEEL, BRONZE OR TEFLON. BEARING AREAS SHALL BE ISOLATED FROM THE FLOW. PLUG VALVES SHALL HAVE PACKING BONNETS WHERE THE SHAFT PROTRUDES FROM THE VALVE AND THE PACKING SHALL BE SELF-ADJUSTING TYPE WHICH CAN BE REPLACED WITHOUT REMOVING THE BONNET. ALL NUTS, BOLTS, SPRINGS AND WASHERS SHALL BE TYPE 316 MINIMUM STAINLESS STEEL . PLUG VALVES UP TO 12" SHALL HAVE A PRESSURE RATING OF 175 PSI AND VALVES 14" AND LARGER SHALL HAVE A PRESSURE RATING OF 150 PSI MINIMUM. THE VALVE AND ACTUATOR SHALL BE CAPABLE OF SATISFACTORY OPERATION IN EITHER DIRECTION OF FLOW. VALVES SHALL BE BUBBLE TIGHT IN BOTH DIRECTIONS. PLUG VALVES OVER 10" IN DIAMETER SHALL HAVE WORM GEAR OPERATORS. THE OPERATING MECHANISM SHALL BE FOR BURIED SERVICE WITH A 2 INCH SQUARE OPERATING NUT.
6. TAPPING SLEEVES SHALL BE MUELLER H615, CLOW F-2505 OR APPROVED EQUAL. SEE BROWARD COUNTY, AND CITY CONSTRUCTION STANDARDS & SPECIFICATIONS FOR ADDITIONAL REQUIREMENTS.
7. VALVE BOXES SHALL BE US FOUNDRY SERIES 7500 OR APPROVED EQUAL.
8. RETAINER GLANDS SHALL CONFORM TO ANSI/AWWA C111/A21.11-00 OR LATEST REVISION. ALL GLANDS SHALL BE MANUFACTURED FROM DUCTILE IRON AS LISTED BY UNDERWRITERS LABORATORIES FOR 250 PSI MINIMUM WATER PRESSURE RATING. CLOW CORPORATION MODEL F-1058, STANDARD FIRE PROTECTION EQUIPMENT COMPANY OR APPROVED EQUAL.
9. DRESSER COUPLINGS SHALL BE REGULAR BLACK COUPLINGS WITH PLAIN GASKETS FOR GALVANIZED STEEL PIPE. THEY SHALL BE DRESSER STYLE 90. NO SUBSTITUTIONS ALLOWED.
10. FIRE HYDRANTS SHALL BE MUELLER CENTURION TRAFFIC TYPE A-423 WITH 5 1/4" INTERNAL VALVE OPENING OR APPROVED EQUAL. MAIN VALVE OPENING TO BE DETERMINED BY THE WATER DEPARTMENT. PUMPER NOZZLE TO BE 18" FROM FINISHED GRADE. ALL HYDRANTS TO BE INSTALLED WITH CONTROL VALVE. RETAINER GLANDS ARE PREFERRED FOR RESTRAINING. FIRE HYDRANT SHALL COMPLY WITH ANSI/AWWA C502-05. SEE BROWARD COUNTY AND CITY CONSTRUCTION STANDARDS & SPECIFICATIONS FOR ADDITIONAL REQUIREMENTS.

D. SERVICE CONNECTION:

1. SERVICE SADDLES SHALL BE STAINLESS STEEL STRAPS, SADDLES SHALL BE DOUBLE STRAP TYPE. ALL SERVICE SADDLES SHALL CONFORM TO ANSI/AWWA C111/A21.11-00 AND ASTM A-588.
2. SERVICE LINES SHALL BE POLYETHYLENE (3408), 250 PSI RATED, SDR9. PIPE JOINTS SHALL BE OF THE COMPRESSION TYPE TOTALLY CONFINED GRIP SEAL AND COUPLING NUT.
3. CORPORATION STOPS SHALL BE MANUFACTURED OF BRASS ALLOY IN ACCORDANCE WITH ASTM B-62 WITH THREADED ENDS, AS MANUFACTURED BY MUELLER B-25008 OR APPROVED EQUAL.
4. CURB STOPS SHALL BE MUELLER H10203 OR APPROVED EQUAL.
5. METER STOPS SHALL BE LOCKWING TYPE AND SHALL BE OF BRONZE CONSTRUCTION IN ACCORDANCE WITH ASTM B-62. METER STOPS SHALL BE CLOSED BOTTOM DESIGN AND RESILIENT "0" RING SEALED AGAINST EXTERNAL LEAKAGE AT THE TOP. STOPS SHALL BE EQUIPPED WITH A METER COUPLING NUT ON THE OUTLET SIDES, AS MANUFACTURED BY MUELLER OR APPROVED EQUAL.

E. INSTALLATION:

1. ALL PVC PIPE SHALL BE INSTALLED IN ACCORDANCE WITH THE UNI-BELL PLASTIC PIPE ASSOCIATIONS "GUIDE FOR INSTALLATION OF PVC PRESSURE PIPE FOR MUNICIPAL WATER DISTRIBUTION SYSTEM." SEE BROWARD COUNTY AND CITY CONSTRUCTION STANDARDS & SPECIFICATIONS FOR ADDITIONAL REQUIREMENTS.
2. ALL DIP SHALL BE INSTALLED IN ACCORDANCE WITH ANSI/AWWA C600-05 OR LATEST REVISION.
3. ALL WATER MAINS AND FORCE MAINS SHALL BE LAID WITH A MINIMUM 36" COVER FOR PVC AND 30" FOR DIP.
4. NO CONNECTIONS TO EXISTING LINES SHALL BE MADE UNTIL PRESSURE TESTS & BACTERIOLOGICAL TESTS HAVE BEEN PERFORMED AND THE SYSTEM IS ACCEPTABLE TO THE CITY OR BROWARD COUNTY BEACH AND PUBLIC HEALTH UNIT.
5. PIPE DEFLECTION SHALL NOT EXCEED 75% OF THE MAXIMUM DEFLECTION RECOMMENDED BY THE MANUFACTURER.
6. A CONTINUOUS AND UNIFORM BEDDING SHALL BE PROVIDED. BACKFILL MATERIAL SHALL BE TAMPED IN LAYERS AROUND THE PIPE AS SHOWN ON THE PLANS. STONES FOUND IN THE TRENCH SHALL BE REMOVED FOR A DEPTH OF AT LEAST 6" BELOW THE BOTTOM OF THE PIPE.
7. ALL VALVES SHALL BE INSTALLED WITH ADJUSTABLE CAST IRON VALVE BOXES WITH THE WORD "WATER" CAST IN THE COVER. U.S.F. OR APPROVED EQUAL.
8. ALL WATER MAIN INSTALLATIONS SHALL COMPLY WITH THE COLOR CODING REQUIREMENTS OF CHAPTER 62-555.320, FAC.

F. TESTING:

1. FOR TESTING REQUIREMENTS SEE CITY AND BROWARD COUNTY CONSTRUCTION STANDARDS & SPRCIFICATIONS.
2. BEFORE ANY PHYSICAL CONNECTIONS TO THE EXISTING WATER MAINS ARE MADE, THE COMPLETE WATER SYSTEM SHALL BE PRESSURE TESTED AND DISINFECTED. HYDROSTATIC TESTING OF NEW MAINS SHALL BE PERFORMED AT A MINIMUM STARTING PRESSURE OF 150 PSI FOR TWO HOURS IN ACCORDANCE WITH ANSI/AWWA C600-05 OR LATEST REVISION, THE PRESSURE TEST SHALL NOT VARY MORE THAN 5 PSI DURING THE TEST.
3. THE PRESSURE TEST SHALL BE WITNESSED BY A REPRESENTATIVE OF THE CITY OR BROWARD COUNTY AND THE ENGINEER OF RECORD.
4. BEFORE ACCEPTANCE FOR OPERATION, THE WATER SYSTEM SHALL BE DISINFECTED IN ACCORDANCE WITH THE ANSI/AWWA C651-05; 150 PSI MINIMUM STARTING PRESSURE TEST. METER RECONNECTIONS MAY BE MADE TO NEW LINES AFTER TWO CONSECUTIVE DAYS OF BACTERIOLOGICAL SAMPLES HAVE PASSED, AND COPIES OF RESULTS HAVE BEEN RECEIVED BY THE ENGINEER, CITY, AND HRS.
5. SAMPLING POINTS SHALL BE PROVIDED AT THE LOCATIONS SHOWN ON THE PLANS. IF NOT SPECIFIED, SAMPLING POINTS SHALL BE PROVIDED AT INTERVALS OF 2,000' MAXIMUM FOR LINES GREATER THAN 2,000' IN LENGTH.
6. THE ALLOWABLE LEAKAGE SHALL BE LESS THAN THE NUMBER OF GALLONS PER HOUR AS DETERMINED BY THE FORMULA:

$$L = \frac{S D \sqrt{P}}{148{,}000}$$

IN WHICH L EQUALS THE ALLOWABLE LEAKAGE IN GALLONS PER HOUR. S EQUALS LENGTH OF PIPE (LINEAR FEET), D EQUALS NOMINAL DIAMETER OF PIPE (INCHES) AND P EQUALS THE AVERAGE TEST PRESSURE(POUNDS PER SQUARE INCH).

VII. GRAVITY SEWER COLLECTION SYSTEM

A. CITY AND BROWARD COUNTY CONSTRUCTION STANDARDS & SPECIFICATIONS SHALL GOVERN & SUPERCEDE ALL OTHER REQUIREMENTS FOR SANITARY SEWER CONSTRUCTION.

B. GENERAL:

1. DISTANCE AND LENGTHS SHOWN ON PLANS ARE REFERENCED TO THE CENTER OF STRUCTURES.

C. MATERIALS:

1. ALL SEWER PIPE AND FITTINGS SHALL BE PVC PIPE CONFORMING TO ASTM D 3034, SDR-35 WITH PUSH-ON RUBBER GASKET JOINTS, UNLESS OTHERWISE NOTED, OR DUCTILE IRON PIPE SHALL BE (MIN. CLASS 52), AS INDICATED ON THE DRAWINGS.
2. MANHOLES SHALL BE PRECAST PER ASTM C 478 WITH 4,000 PSI CONCRETE AND GRADE 60 STEEL. MONOLITHICALLY POURED BASES ONLY.
3. MANHOLES ARE TO BE SEALED WITH ANTI-HYDRO CEMENT OR APPROVED EQUAL - NO MOULDING PLASTER.

D. INSTALLATION:

1. PVC SEWER PIPE SHALL BE LAID IN ACCORDANCE WITH ASTM D 2321 AND THE UNI-BELL PLASTIC PIPE ASSOCIATION'S "RECOMMENDED PRACTICE FOR THE INSTALLATION OF PVC SEWER PIPE."
2. DUCTILE IRON PIPE SHALL BE INSTALLED IN ACCORDANCE WITH ANSI/AWWA C600-05 OR LATEST REVISION.
3. PVC MANHOLE ADAPTOR SHALL BE GROUTED IN PLACE AT EACH PIPE CONNECTION INTO A MANHOLE WALL.
4. MANHOLES SHALL BE SET PLUMB TO LINE AND GRADE ON FIRM SUBGRADE PROVIDING UNIFORM BEARING UNDER THE BASE.
5. ALL OPENINGS AND JOINTS SHALL BE SEALED WATERTIGHT.
6. THE ENTIRE INSIDE AND OUTSIDE OF THE MANHOLES SHALL BE PAINTED WITH TWO COATS OF DIFFERENT COLORS (8 MILS EACH) OF KOPPERS 300-M BITUMASTIC PAINT OR ENGINEER'S APPROVED EQUAL.

E. TESTING:

1. AFTER CONSTRUCTION OF THE SEWER SYSTEM, THE ENGINEER MAY REQUIRE A VISUAL INFILTRATION AND/OR EXFILTRATION TEST TO BE PERFORMED ON THE ENTIRE SYSTEM OR ANY PART THEREOF.
2. AN AIR TEST MAY BE SUBSTITUTED FOR THE WATER EXFILTRATION TEST, UPON APPROVAL OF THE ENGINEER.
3. MANHOLE LEAKAGE TEST SHALL NOT EXCEED FOUR GALLONS PER DAY PER UNIT. NO VISIBLE LEAKAGE ALLOWED.
4. SEWER PIPE LEAKAGE ALLOWABLE SHALL NOT EXCEED 150 GALLONS PER DAY PER INCH DIAMETER PER MILE IN A TWO HOUR TEST PERIOD FOR ANY SECTION TESTED. NO VISIBLE LEAKAGE SHALL BE ALLOWED.
5. ALL SEWER PIPE SHALL BE VIDEO RECORDED AND GIVEN TO CITY FOR REVIEW AND APPROVAL AT THE CONTRACTORS EXPENSE.
6. SEE BROWARD COUNTY AND CITY CONSTRUCTION STANDARDS & SPECIFICATIONS FOR ADDITIONAL TESTING REQUIREMENTS.

VIII. STORM DRAINAGE

A. GENERAL:

1. DISTANCES AND LENGTHS SHOWN ON PLANS ARE REFERENCED TO THE CENTER OF STRUCTURES.

B. MATERIALS:

1. REINFORCED CONCRETE PIPE (R.C.P.) SHALL MEET THE REQUIREMENTS OF ASTM C-76, LATEST REVISION. RUBBER GASKETS OR OTHER MANUFACTURER SUPPLIED JOINT SEALER SHALL BE USED. FOR ADDITIONAL REQUIREMENTS SEE BROWARD COUNTY'S AND THE CITY'S STANDARDS AND SPECIFICATIONS.
2. ALL DRAINAGE CATCH BASINS AND STRUCTURES SHALL BE PRECAST CONCRETE AS MANUFACTURED BY U.S. PRECAST CORPORATION, UNLESS OTHERWISE NOTED ON THE PLANS. THE MINIMUM WALL AND SLAB THICKNESS SHALL BE 8 INCHES AND THE MINIMUM REINFORCING SHALL BE AS INDICATED ON THE STRUCTURE DETAIL. CONCRETE SHALL BE MINIMUM OF 400PSI AT 28 DAYS.

C. INSTALLATION:

1. PIPE SHALL BE PLACED ON A MINIMUM OF 8" STABLE GRANULAR MATERIAL FREE OF ROCK FORMATION AND OTHER FOREIGN FORMATIONS, AND CONSTRUCTED TO A UNIFORM GRADE AND LINE.
2. BACKFILL MATERIAL SHALL BE WELL GRADED GRANULAR MATERIAL, WELL TAMPED IN LAYERS NOT TO EXCEED 6 INCHES TO A HEIGHT OF 12 INCHES ABOVE PIPE AS SHOWN ON THE PLANS.
3. PROVIDE A MINIMUM PROTECTIVE COVER OF 18 INCHES OVER STORM SEWER AND AVOID UNNECESSARY CROSSING BY HEAVY CONSTRUCTION VEHICLES DURING CONSTRUCTION.
4. THE CONTRACTOR SHALL NOTIFY THE CITY'S ENGINEERING DEPARTMENT AT LEAST 7 DAYS PRIOR TO THE START OF THE CONSTRUCTION AND INSPECTION.

IX. PAVING

A. GENERAL:

1. THE CITY AND FDOT CONSTRUCTION STANDARDS & SPECIFICATIONS SHALL GOVERN.
2. ALL MUCK AND YIELDING MATERIAL WITHIN THE LIMIT OF CONSTRUCTION SHALL BE REMOVED AND REPLACED WITH CLEAN FILL MATERIAL WHICH SHALL BE COMPACTED AND SHAPED TO CONFORM TO THE REQUIRED SECTION. COMPACTED AREAS, AS SHOWN ON THE PLANS AND OR AS DETERMINED BY THE ENGINEER, SHALL BE COMPACTED TO NOT LESS THAN 98% OF MAXIMUM DENSITY AT OPTIMUM MOISTURE, AS DETERMINED BY AASHTO T-180, LATEST REVISION. AREAS TO BE STABILIZED, AS DETERMINED BY THE ENGINEER, SHALL HAVE A MINIMUM LBR-40.
3. ALL UNDERGROUND UTILITIES SHALL BE COMPLETED PRIOR TO CONSTRUCTION OF LIMEROCK BASE.
4. ALL EXISTING PAVEMENT, CUT OR DAMAGED BY CONSTRUCTION, SHALL BE PROPERLY RESTORED AT THE CONTRACTOR'S EXPENSE.
5. WHERE ANY PROPOSED PAVEMENT IS TO BE CONNECTED TO EXISTING PAVEMENT, THE EXISTING EDGE OF PAVEMENT SHALL BE SAW CUT.

B. MATERIALS:

1. BASE COURSE SHALL BE CRUSHED LIMEROCK WITH A MINIMUM OF 70% CARBONATES OF CALCIUM AND MAGNESIUM.
2. ASPHALT SURFACES SHALL BE SUPER PAVE ASPHALTIC CONCRETE IN FDOT RIGHT-OF-WAY AND TYPE S-III ASPHALTIC CONCRETE IN CITY RIGHT-OF-WAY, UNLESS OTHERWISE SPECIFIED ON THE PLANS. ASPHALT THICKNESS SHALL BE AS SPECIFIED ON THE PLANS.
3. MINIMUM SIDEWALK CONSTRUCTION SHALL BE 4 INCH THICK CONCRETE, MINIMUM 3000psi COMPRESSIVE STRENGTH AT 28 DAYS. SAWCUT CONSTRUCTION JOINTS 5 FOOT o.c. WITHIN 48 HOURS OF PLACING, EXPANSION JOINTS SHALL BE 20 FOOT o.c. SEE BROWARD COUNTY'S AND THE CITY'S SECTION ON CONSTRUCTION STANDARDS & SPECIFICATIONS FOR FURTHER REQUIREMENTS.
4. CURBS AND GUTTERS: CONCRETE 3000psi COMPRESSIVE STRENGTH AT 28 DAYS, SAWCUT CONSTRUCTION JOINTS 10 FOOT o.c. WITHIN 48 HOURS OF PLACING.
5. REINFORCED CONCRETE SLABS SHALL BE CONSTRUCTED OF CLASS I CONCRETE WITH A MINIMUM STRENGTH OF 3,000 PSI AND SHALL BE REINFORCED WITH A 6" x 6" NO. 6 GAUGE WIRE MESH.

C. INSTALLATION:

1. SUBGRADE FOR PAVEMENT AREAS SHALL BE COMPACTED TO A MINIMUM OF 98% OF THE MAXIMUM DENSITY (AASHTO T-99(c)), AND SHALL HAVE A MINIMUM LBR 40.
2. BASE COURSE MATERIAL FOR PAVED AREAS SHALL BE A MINIMUM THICKNESS OF 8" AND SHALL BE CONSTRUCTED IN TWO FOUR-INCH LIFTS.
3. BASE COURSE MATERIAL FOR CURBS AND GUTTERS SHALL BE A MINIMUM THICKNESS OF 6 INCH.
4. BASE COURSE SHALL BE COMPACTED TO 98% OF THE MAXIMUM DENSITY AS PER AASHTO T-180 AND SHALL HAVE A MINIMUM LBR OF 100.
5. INSTALLATION OF THE WEARING SURFACE SHALL CONFORM WITH THE REQUIREMENTS OF THE D.O.T. STANDARD SPECIFICATIONS FOR TYPE S-III ASPHALTIC CONCRETE.

D. TESTING:

1. THE FINISHED SURFACE OF THE BASE COURSE AND THAT OF THE WEARING SURFACE SHALL NOT VARY MORE THAN 1/4" FROM THE TEMPLATE. ANY IRREGULARITIES EXCEEDING THIS LIMIT SHALL BE CORRECTED.
2. DENSITY TESTS SHALL BE TAKEN BY AN INDEPENDENT TESTING LABORATORY CERTIFIED BY THE STATE OF FLORIDA, WHERE DIRECTED BY THE ENGINEER.
3. ALL TESTING COSTS (PAVING) SHALL BE PAID FOR BY THE CONTRACTOR.
4. DENSITY TESTS ON THE STABILIZED SUBGRADE SHALL BE SUPPLIED TO THE ENGINEER OF RECORD AND APPROVED BEFORE ANY LIMEROCK BASE IS CONSTRUCTED.
5. DENSITY TESTS AND AS-BUILTS ON THE FINISHED LIMEROCK BASE SHALL BE SUPPLIED TO THE ENGINEER OF RECORD, AND APPROVED BEFORE ANY ASPHALT PAVEMENT IS CONSTRUCTED.

X. DEWATERING

1. WHERE DEWATERING IS REQUIRED, THE CONTRACTOR IS RESPONSIBLE FOR DEWATERING IN SUCH A MANNER SO AS TO COMPLY WITH ANY AND ALL CITY, COUNTY, STATE AND FEDERAL DEWATERING REQULATIONS. CONTRACTOR MAY CONTACT THE BROWARD COUNTY DEPARTMENT OF PLANNING AND ENVIRONMENTAL PROTECTION AND THE FLORIDA DEPARTMENT OF ENVIRONMENTAL PROTETCION FOR FURTHER INFORMATION.

XI. PAVEMENT MARKING AND SIGNAGE

1. ALL PAVEMENT MARKINGS AND SIGNAGE SHALL BE IN ACCORDANCE WITH THE "MANUAL ON UNIFORM TRAFFIC CONTROL DEVICES FOR STREETS AND HIGHWAYS," LATEST EDITION; AND BROWARD COUNTY TRAFFIC ENGINEERING STANDARDS (CURRENT EDITION). STANDARDS & SPECIFICATIONS FOR PAVEMENT MARKING REQUIREMENTS.

XII. PROJECT CLOSEOUT

A. CLEANING UP:

1. DURING CONSTRUCTION, THE PROJECT SITE AND ALL ADJACENT AREAS SHALL BE MAINTAINED IN A NEAT AND CLEAN MANNER, AND UPON FINAL CLEAN-UP, THE PROJECT SITE SHALL BE LEFT CLEAR OF ALL SURPLUS MATERIAL OR TRASH. THE PAVED, PAVER BRICK, AND CONCRETE AREAS SHALL BE SWEPT BROOM CLEAN.
2. THE CONTRACTOR SHALL RESTORE OR REPLACE, WHEN AND AS DIRECTED, ANY PUBLIC OR PRIVATE PROPERTY DAMAGED BY HIS WORK, EQUIPMENT, OR EMPLOYEES, TO A CONDITION AT LEAST EQUAL TO THAT EXISTING IMMEDIATELY PRIOR TO THE BEGINNING OF OPERATIONS. TO THAT END, THE CONTRACTOR SHALL DO, AS REQUIRED, ALL NECESSARY HIGHWAY, DRIVEWAY, WALK AND LANDSCAPING WORK. SUITABLE MATERIALS AND METHODS SHALL BE USED FOR SUCH RESTORATION.
3. WHERE MATERIAL OR DEBRIS HAS WASHED OR FLOWED INTO OR HAS BEEN PLACED IN WATER COURSES, DITCHES, DRAINS, CATCH BASINS, OR ELSEWHERE AS A RESULT OF THE CONTRACTOR'S OPERATIONS, SUCH MATERIAL OR DEBRIS SHALL BE REMOVED AND SATISFACTORILY DISPOSED OF DURING THE PROGRESS OF THE WORK, AND THE AREA KEPT IN A CLEAN AND NEAT CONDITION.

B. ALL PROPERTY MONUMENTS OR PERMANENT REFERENCES, REMOVED OR DESTROYED BY THE CONTRACTOR DURING CONSTRUCTION SHALL BE RESTORED BY A STATE OF FLORIDA REGISTERED LAND SURVEYOR AT THE CONTRACTOR'S EXPENSE.

C. ALL UNPAVED SURFACES DISTURBED AS A RESULT OF CONSTRUCTION ACTIVITIES SHALL BE RESTORED TO A CONDITION EQUAL TO OR BETTER THAN THAT WHICH EXISTED BEFORE THE CONSTRUCTION.

XIII. ENGINEER'S AS BUILT REQUIREMENTS

1. DURING THE DAILY PROGRESS OF THE JOB, THE CONTRACTOR SHALL RECORD ON THEIR SET OF CONSTRUCTION DRAWINGS THE EXACT LOCATION, LENGTH, MATERIAL AND ELEVATION OF ANY FACILITY NOT BUILT EXACTLY ACCORDING TO PLANS.
2. AS BUILTS OF WATER LINES SHALL INCLUDE THE FOLLOWING
   a. TOP OF PIPE ELEVATIONS EVERY 100 LINEAR FEET
   b. LOCATIONS AND ELEVATIONS OF ALL FITTINGS INCLUDING BENDS, TEES, GATE VALVES, DOUBLE DETECTOR CHECK VALVES, FIRE HYDRANTS, ETC.
   c. ALL TIE INS TO EXISTING LINES SHALL BE AS BUILT
   d. THE TERMINATION OF ALL WATER SERVICES SHALL BE SHOWN
3. AS BUILTS OF ALL THE GRAVITY SANITARY SEWER LINES SHALL INCLUDE THE FOLLOWING INFORMATION
   a. RIMS, INVERTS, AND LENGTH OF PIPING BETWEEN STRUCTURES, AS WELL AS PIPE SLOPES.
   b. LOCATION OF ALL STUB ENDS OF ALL SEWER LATERALS INVERT ELEVATIONS AND LOCATION OF ALL CLEAN OUTS
   c. LIFT STATION AS BUILTS SHALL CONSIST OF THE TOP OF WET WELL ELEVATION, INVERT ELEVATIONS OF THE INCOMING LINE, BOTTOM OF THE WET WELL AND AS BUILTS OF THE COMPOUND AREA
4. FORCE MAIN AS BUILTS SHALL BE PREPARED THE SAME AS THE WATER MAIN AS BUILTS DESCRIBED ABOVE
5. AS BUILTS OF ALL DRAINAGE LINES SHALL INCLUDE THE FOLLOWING INFORMATION
   a. RIMS, INVERTS, AND LENGTH OF PIPING BETWEEN STRUCTURES, AND WEIR ELEVATIONS WHERE APPLICABLE
   b. THE SIZE OF THE PIPING SHALL BE VERIFIED BY THE SURVEY FIELD CREW AT THE TIME OF AS BUILT
   c. DRAINAGE WELL STRUCTURE AS BUILTS SHALL INCLUDE, BUT NOT BE LIMITED TO, TOP OF CASING ELEVATION, TOP AND BOTTOM ELEVATIONS OF THE BAFFLE WALLS, RIM ELEVATIONS, AND INVERTS OF PIPING
6. ALL ROCK AS BUILTS FOR PARKING LOT AREAS SHALL CONSIST OF THE FOLLOWING INFORMATION
   a. ROCK ELEVATIONS AT ALL HIGH AND LOW POINTS, AND AT ENOUGH INTERMIEDIATE POINTS TO CONFIRM SLOPE CONSISTENCY
   b. ROCK AS BUILTS SHALL BE TAKEN AT ALL LOCATIONS WHERE THERE IS A FINISHED GRADE ELEVATION SHOWN ON THE DESIGN PLANS
   c. ALL CATCH BASIN AND MANHOLE RIM ELEVATIONS SHALL BE SHOWN
   d. ELEVATIONS AROUND ISLANDS SHALL ALSO BE SHOWN
   e. WHERE CONCRETE OR PAVER BRICK IS TO BE USED AS A FINISHED PRODUCT FOR THE ROADWAY OR PARKING LOT, ROCK AS BUILTS WILL BE REQUIRED AS INDICATED ABOVE, AS WELL AS BUILTS ON THE FINISHED CONCRETE OR PAVERS AT LOCATIONS WHERE THERE IS A FINISHED GRADE ELEVATION SHOWN ON THE DESIGN PLANS
   f. AS BUILTS SHALL BE TAKEN ON ALL PAVED AND UNPAVED SWALES, PRIOR TO PLACEMENT OF ASPHALT OR TOPSOIL OR SOD, AT ENOUGH INTERMEDIATE POINTS TO CONFIRM SLOPE CONSISTENCY AND CONFORMANCE TO THE PLANS
7. UPON COMPLETION OF THE WORK, THE CONTRACTOR SHALL PREPARE RECORD DRAWINGS, ON FULL SIZE REPRODUCIBLE MATERIAL. ONE SET OF REPRODUCIBLE RECORD DRAWINGS SHALL BE SUBMITTED TO THE ENGINEER OF RECORD, ALONG WITH EIGHT SETS OF BLUE OR BLACK LINE DRAWINGS. THESE DRAWINGS SHALL BE SIGNED AND SEALED BY A FLORIDA REGISTERED LAND SURVEYOR. ADDITIONALLY, AN ELECTRONIC COPY OF THESE RECORD DRAWINGS SHALL BE SUBMITTED TO THE ENGINEER IN AUTOCAD, ".DWG" OR ".DXF" FORMAT, AND ARCGIS ".SHP" AND ".SHX" FORMAT.
8. IN ADDITION TO THE ABOVE THE CONTRACTOR SHALL ALSO CONFORM TO COUNTY AND/OR CITY AS-BUILT REQUIREMENTS.

DATE:	07-03-2019
SCALE:	AS SHOWN
DESIGN BY:	PJG
DRAWN BY:	DLC
CHECKED BY:	PJG
APPROVED BY:	PJG

BY:	DATE:	DESCRIPTION:

CRAVEN • THOMPSON AND ASSOCIATES, INC.
ENGINEERS • PLANNERS • SURVEYORS
3563 N.W. 53RD STREET, FORT LAUDERDALE, FLORIDA 33309
FAX: (954) 739-6409 TEL.: (954) 739-6400
FLORIDA LICENSED ENGINEERING, SURVEYING & MAPPING BUSINESS No. 271
FLORIDA LICENSED LANDSCAPE ARCHITECTURE BUSINESS No. C000114

PUMP STATION NO. 8 REPLACEMENT

PREPARED FOR: CITY OF HALLANDALE BEACH

GENERAL NOTES & SPECIFICATIONS

Patrick J. Gibney, State of Florida, Professional Engineer, License No. 49428

This item has been digitally signed and sealed by Patrick J. Gibney, PE. on the date adjacent to the seal.

Printed copies of this document are not considered signed and sealed and the signature must be verified on any electronic copies.

Patrick J. Gibney
Florida P.E. No. 49428

PROJECT NO.
17-0039-001-02

GN

R:\Engineering\2017\17-0039-001-02 Hallandale PS 08\Drawings\17-0039-001-02-GN.dwg [GN] Aug 17, 2019 12:22am DCHIN

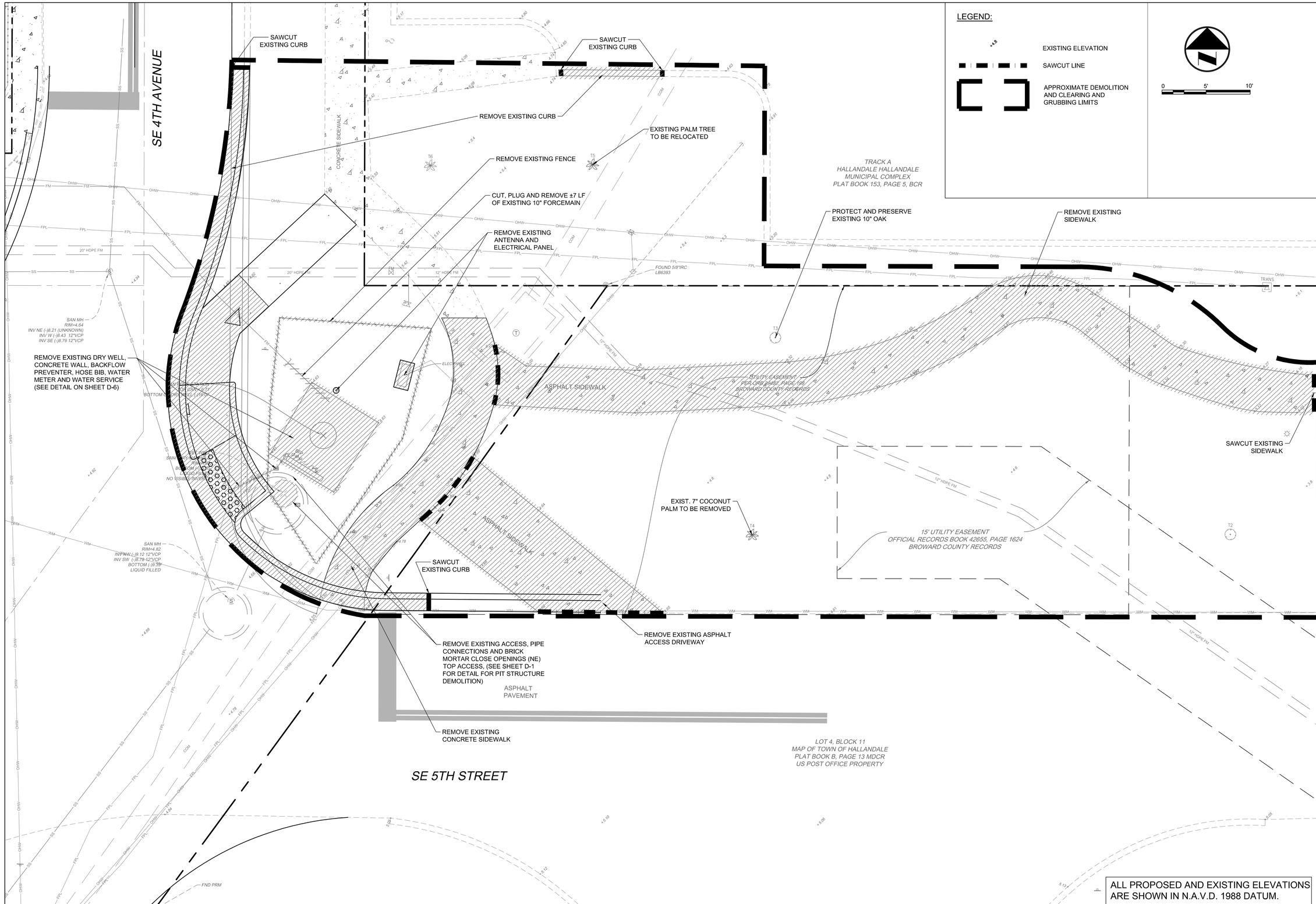

ALL PROPOSED AND EXISTING ELEVATIONS ARE SHOWN IN N.A.V.D. 1988 DATUM.

DATE:	07-03-2019
SCALE:	AS SHOWN
DESIGN BY:	PJG
DRAWN BY:	DLC
CHECKED BY:	PJG
APPROVED BY:	PJG

DESCRIPTION:	BY:	DATE:

CRAVEN • THOMPSON AND ASSOCIATES, INC.
ENGINEERS • PLANNERS • SURVEYORS
3563 N.W. 53RD STREET, FORT LAUDERDALE, FLORIDA 33309
FAX: (954) 739-6409 TEL.: (954) 739-6400
FLORIDA LICENSED ENGINEERING, SURVEYING & MAPPING BUSINESS No. 271
FLORIDA LICENSED LANDSCAPE ARCHITECTURE BUSINESS No. C000114.

MATERIAL SHOWN HEREON IS THE PROPERTY OF CRAVEN THOMPSON & ASSOCIATES, INC. AND SHALL NOT BE REPRODUCED IN WHOLE OR IN PART, WITHOUT PERMISSION OF CRAVEN THOMPSON & ASSOCIATES, INC. © 2019

PUMP STATION NO. 8 REPLACEMENT

PREPARED FOR:
CITY OF HALLANDALE BEACH

SITE DEMOLITION PLAN

Patrick J. Gibney, State of Florida, Professional Engineer, License No. 49428

This item has been digitally signed and sealed by Patrick J. Gibney, PE. on the date adjacent to the seal.

Printed copies of this document are not considered signed and sealed and the signature must be verified on any electronic copies.

Patrick J. Gibney
Florida P.E. No. 49428

PROJECT NO.
17-0039-001-02

SDP

SHEET 3 OF 28

R:\Engineering\2017\17-0039-001-02 Hallandale PS 08\Drawings\17-0039-001-02-DEMO.dwg [DEMO PLAN] Sep 03, 2019 11:56am DCHIN

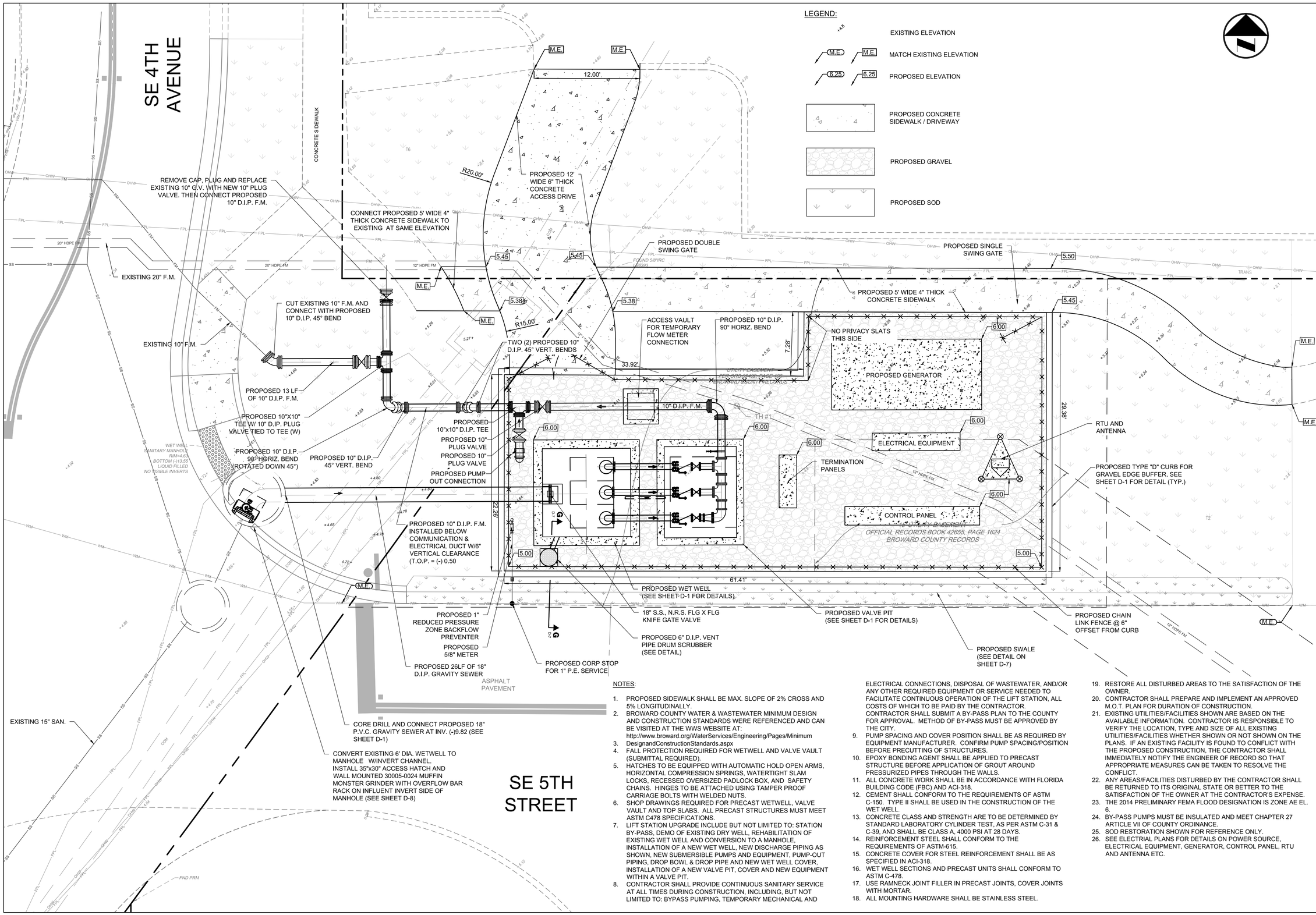

NOTES:

1. PROPOSED SIDEWALK SHALL BE MAX. SLOPE OF 2% CROSS AND 5% LONGITUDINALLY.
2. BROWARD COUNTY WATER & WASTEWATER MINIMUM DESIGN AND CONSTRUCTION STANDARDS WERE REFERENCED AND CAN BE VISITED AT THE WWS WEBSITE AT: http://www.broward.org/WaterServices/Engineering/Pages/Minimum DesignandConstructionStandards.aspx
3. FALL PROTECTION REQUIRED FOR WETWELL AND VALVE VAULT (SUBMITTAL REQUIRED).
4. HATCHES TO BE EQUIPPED WITH AUTOMATIC HOLD OPEN ARMS, HORIZONTAL COMPRESSION SPRINGS, WATERTIGHT SLAM LOCKS, RECESSED OVERSIZED PADLOCK BOX, AND SAFETY CHAINS. HINGES TO BE ATTACHED USING TAMPER PROOF CARRIAGE BOLTS WITH WELDED NUTS.
5. SHOP DRAWINGS REQUIRED FOR PRECAST WETWELL, VALVE VAULT AND TOP SLABS. ALL PRECAST STRUCTURES MUST MEET ASTM C478 SPECIFICATIONS.
6. LIFT STATION UPGRADE INCLUDE BUT NOT LIMITED TO: STATION BY-PASS, DEMO OF EXISTING DRY WELL, REHABILITATION OF EXISTING WET WELL AND CONVERSION TO A MANHOLE, INSTALLATION OF A NEW WET WELL, NEW DISCHARGE PIPING AS SHOWN, NEW SUBMERSIBLE PUMPS AND EQUIPMENT, PUMP-OUT PIPING, DROP BOWL & DROP PIPE AND NEW WET WELL COVER, INSTALLATION OF A NEW VALVE PIT, COVER AND NEW EQUIPMENT WITHIN A VALVE PIT.
7. CONTRACTOR SHALL PROVIDE CONTINUOUS SANITARY SERVICE AT ALL TIMES DURING CONSTRUCTION, INCLUDING, BUT NOT LIMITED TO: BYPASS PUMPING, TEMPORARY MECHANICAL AND ELECTRICAL CONNECTIONS, DISPOSAL OF WASTEWATER, AND/OR ANY OTHER REQUIRED EQUIPMENT OR SERVICE NEEDED TO FACILITATE CONTINUOUS OPERATION OF THE LIFT STATION, ALL COSTS OF WHICH TO BE PAID BY THE CONTRACTOR. CONTRACTOR SHALL SUBMIT A BY-PASS PLAN TO THE COUNTY FOR APPROVAL. METHOD OF BY-PASS MUST BE APPROVED BY THE CITY.
8. CONTRACTOR SHALL PROVIDE CONTINUOUS SANITARY SERVICE AT ALL TIMES DURING CONSTRUCTION, INCLUDING, BUT NOT LIMITED TO: BYPASS PUMPING, TEMPORARY MECHANICAL AND ELECTRICAL CONNECTIONS, DISPOSAL OF WASTEWATER, AND/OR ANY OTHER REQUIRED EQUIPMENT OR SERVICE NEEDED TO FACILITATE CONTINUOUS OPERATION OF THE LIFT STATION, ALL COSTS OF WHICH TO BE PAID BY THE CONTRACTOR. CONTRACTOR SHALL SUBMIT A BY-PASS PLAN TO THE COUNTY FOR APPROVAL. METHOD OF BY-PASS MUST BE APPROVED BY THE CITY.
9. PUMP SPACING AND COVER POSITION SHALL BE AS REQUIRED BY EQUIPMENT MANUFACTURER. CONFIRM PUMP SPACING/POSITION BEFORE PRECUTTING OF STRUCTURES.
10. EPOXY BONDING AGENT SHALL BE APPLIED TO PRECAST STRUCTURE BEFORE APPLICATION OF GROUT AROUND PRESSURIZED PIPES THROUGH THE WALLS.
11. ALL CONCRETE WORK SHALL BE IN ACCORDANCE WITH FLORIDA BUILDING CODE (FBC) AND ACI-318.
12. CEMENT SHALL CONFORM TO THE REQUIREMENTS OF ASTM C-150. TYPE II SHALL BE USED IN THE CONSTRUCTION OF THE WET WELL.
13. CONCRETE CLASS AND STRENGTH ARE TO BE DETERMINED BY STANDARD LABORATORY CYLINDER TEST, AS PER ASTM C-31 & C-39, AND SHALL BE CLASS A, 4000 PSI AT 28 DAYS.
14. REINFORCEMENT STEEL SHALL CONFORM TO THE REQUIREMENTS OF ASTM-615.
15. CONCRETE COVER FOR STEEL REINFORCEMENT SHALL BE AS SPECIFIED IN ACI-318.
16. WET WELL SECTIONS AND PRECAST UNITS SHALL CONFORM TO ASTM C-478.
17. USE RAMNECK JOINT FILLER IN PRECAST JOINTS, COVER JOINTS WITH MORTAR.
18. ALL MOUNTING HARDWARE SHALL BE STAINLESS STEEL.
19. RESTORE ALL DISTURBED AREAS TO THE SATISFACTION OF THE OWNER.
20. CONTRACTOR SHALL PREPARE AND IMPLEMENT AN APPROVED M.O.T. PLAN FOR DURATION OF CONSTRUCTION.
21. EXISTING UTILITIES/FACILITIES SHOWN ARE BASED ON THE AVAILABLE INFORMATION. CONTRACTOR IS RESPONSIBLE TO VERIFY THE LOCATION, TYPE AND SIZE OF ALL EXISTING UTILITIES/FACILITIES WHETHER SHOWN OR NOT SHOWN ON THE PLANS. IF AN EXISTING FACILITY IS FOUND TO CONFLICT WITH THE PROPOSED CONSTRUCTION, THE CONTRACTOR SHALL IMMEDIATELY NOTIFY THE ENGINEER OF RECORD SO THAT APPROPRIATE MEASURES CAN BE TAKEN TO RESOLVE THE CONFLICT.
22. ANY AREAS/FACILITIES DISTURBED BY THE CONTRACTOR SHALL BE RETURNED TO ITS ORIGINAL STATE OR BETTER TO THE SATISFACTION OF THE OWNER AT THE CONTRACTOR'S EXPENSE.
23. THE 2014 PRELIMINARY FEMA FLOOD DESIGNATION IS ZONE AE EL. 6.
24. BY-PASS PUMPS MUST BE INSULATED AND MEET CHAPTER 27 ARTICLE VII OF COUNTY ORDINANCE.
25. SOD RESTORATION SHOWN FOR REFERENCE ONLY.
26. SEE ELECTRIAL PLANS FOR DETAILS ON POWER SOURCE, ELECTRICAL EQUIPMENT, GENERATOR, CONTROL PANEL, RTU AND ANTENNA ETC.

DATE:	07-03-2019
SCALE:	AS SHOWN
DESIGN BY:	PJG
DRAWN BY:	DLC
CHECKED BY:	PJG
APPROVED BY:	PJG

DESCRIPTION:	BY:	DATE:

CRAVEN • THOMPSON AND ASSOCIATES, INC.
ENGINEERS • PLANNERS • SURVEYORS
3563 N.W. 53RD STREET, FORT LAUDERDALE, FLORIDA 33309
FAX: (954) 739-6409 TEL.: (954) 739-6400
FLORIDA LICENSED ENGINEERING, SURVEYING & MAPPING BUSINESS No. 271
FLORIDA LICENSED LANDSCAPE ARCHITECTURE BUSINESS No. C000114.

MATERIAL SHOWN HEREON IS THE PROPERTY OF CRAVEN THOMPSON & ASSOCIATES, INC. AND SHALL NOT BE REPRODUCED IN WHOLE OR IN PART, WITHOUT PERMISSION OF CRAVEN THOMPSON & ASSOCIATES, INC. CRAVEN THOMPSON & ASSOCIATES, INC. 2018

PUMP STATION NO. 8 REPLACEMENT

PREPARED FOR:
CITY OF HALLANDALE BEACH

SITE PLAN

Patrick J. Gibney, State of Florida, Professional Engineer, License No. 49428

This item has been digitally signed and sealed by Patrick J. Gibney, PE. on the date adjacent to the seal.

Printed copies of this document are not considered signed and sealed and the signature must be verified on any electronic copies.

Patrick J. Gibney
Florida P.E. No. 49428

PROJECT NO.
17-0039-001-02

SP

SHEET ____ OF 28

R:\Engineering\2017\17-0039-001-02 Hallandale PS 08\Drawings\17-0039-001-02-SP.dwg [SITE PLAN] Sep 03, 2019 11:58am DCHIN

BID # FY 2019-2020-001 PUMP STATION # 8 REPLACEMENT

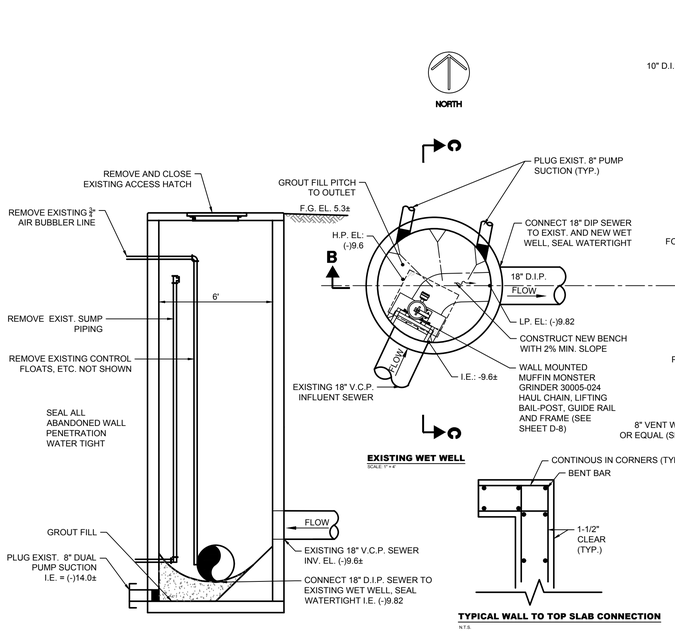

SECTION C-C
SCALE: 1"=4'

EXISTING WET WELL
SCALE: 1"=4'

TYPICAL WALL TO TOP SLAB CONNECTION
N.T.S.

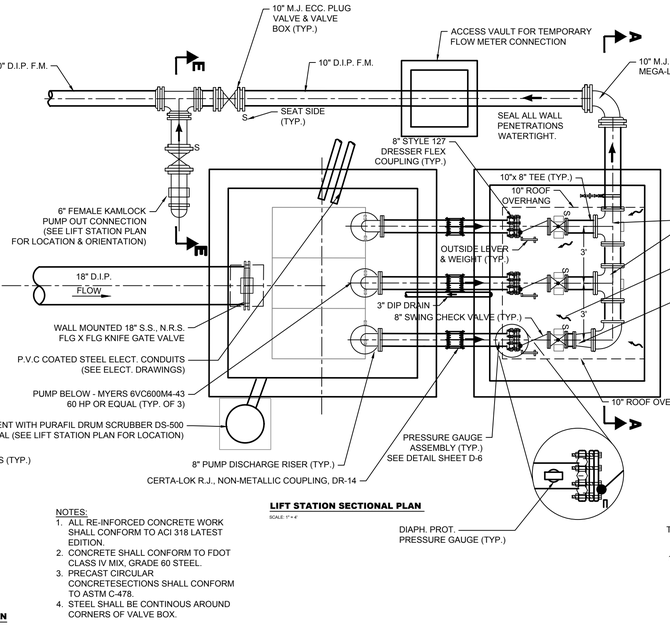

LIFT STATION SECTIONAL PLAN
SCALE: 1"=4'

NOTES:
1. ALL RE-INFORCED CONCRETE WORK SHALL CONFORM TO ACI 318 LATEST EDITION.
2. CONCRETE SHALL CONFORM TO FDOT CLASS IV MIX, GRADE 60 STEEL.
3. PRECAST CIRCULAR CONCRETESECTIONS SHALL CONFORM TO ASTM C-478.
4. STEEL SHALL BE CONTINOUS AROUND CORNERS OF VALVE BOX.

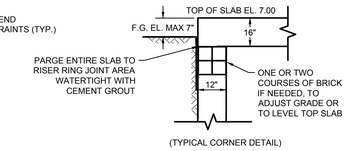

(TYPICAL CORNER DETAIL)

SECTION D-D
N.T.S.

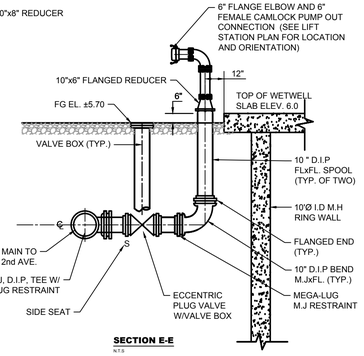

SECTION E-E
N.T.S.

NOTE:
SOUTH PUMP-OUT CONNECTION IS SIMILAR.

GENERAL NOTES:

1. LIFT STATION UPGRADE INCLUDES BUT NOT LIMITED TO: STATION BY-PASS, DEMO OF EXISTING PUMPS, PANELS, PIPING, AND ELECTRICAL EQUIPMENT AS SHOWN, INSTALLATION OF NEW WETWELL, VALVE VAULT, PUMPS, PIPING AND FITTINGS AS SHOWN, INSTALLATION OF NEW ACCESS HATCHES WITH ODOR REDUCTION GASKET, CONVERSION OF EXISTING WET WELL TO A MANHOLE AS SHOWN, COATINGS AS SPECIFIED, ALL ELECTRICAL EQUIPMENT, AND NEW WATER SERVICE AND BACKFLOW PREVENTER AS SHOWN.
2. CONTRACTOR SHALL PROVIDE CONTINUOUS SANITARY SERVICE AT ALL TIMES DURING CONSTRUCTION, INCLUDING, BUT NOT LIMITED TO: BYPASS PUMPING, TEMPORARY MECHANICAL AND ELECTRICAL CONNECTIONS, DISPOSAL OF WASTEWATER, AND/OR ANY OTHER REQUIRED EQUIPMENT OR SERVICE NEEDED TO FACILITATE CONTINUOUS OPERATION OF THE LIFT STATION, ALL COSTS OF WHICH TO BE PAID BY THE CONTRACTOR. CONTRACTOR SHALL SUBMIT A BY-PASS PLAN TO THE CITY FOR APPROVAL. METHOD OF BY-PASS MUST BE APPROVED BY THE CITY. BYPASS PUMPING MUST BE IN OPERATION FOR A FULL WEEK AND SATISFACTORY TO THE CITY AND ENGINEER PRIOR TO PROCEEDING WITH DEMOLITION OF THE EXISTING EQUIPMENT.
3. WETWELL AND VALVE VAULT ACCESS HATCHES SHALL BE US FOUNDRY TYPE "THD" ALUMINUM ACCESS HATCHES (OR APPROVED EQUAL). ALL HARDWARE TO BE 316 STAINLESS STEEL.
4. FALL PROTECTION REQUIRED FOR WETWELL AND VALVE VAULT (SUBMITTAL REQUIRED).
5. HATCHES TO BE EQUIPPED WITH AUTOMATIC HOLD OPEN ARMS, HORIZONTAL COMPRESSION SPRINGS, WATERTIGHT SLAM LOCKS, RECESSED OVERSIZED PADLOCK BOX, AND SAFETY CHAINS. HINGES TO BE ATTACHED USING TAMPER PROOF CARRIAGE BOLTS WITH WELDED NUTS.
6. ALL PRECAST STRUCTURES MUST MEET ASTM C478 SPECIFICATIONS. WETWELL AND CONCRETE STRUCTURES SHALL BE DESIGNED BY A STRUCTURAL ENGINEER REGISTERED IN FLORIDA. SHOP DRAWINGS FOR WETWELL, VALVE VAULT, AND TOP SLABS SHALL BE SUBMITTED TO THE ENGINEER OF RECORD ALONG WITH STRUCTURAL AND UPLIFT CALCULATIONS FOR APPROVAL.
7. ALL DEWATERING REQUIRED TO CONSTRUCT THIS PROJECT IS EXCLUSIVELY THE RESPONSI BILITY OF THE CONTRACTOR AND SHALL BE INCLUDED IN THE BID AMOUNT. THE PROSPECTIVE BIDDER SHALL VISIT THE LIFT STATION AND BE FAMILIAR WITH THE GROUNDWATER CONDITIONS IN THE AREA. PRIOR TO BIDDING, THE PROSPECTIVE BIDDER SHALL RECOGNIZE DEWATERING.
8. TWO FLOAT HANGERS TO BE INSTALLED ON SIDES OF HATCH OPENING. HANGERS SHALL BE TYPE 316 STAINLESS STEEL W/ MIN. 1/2" DIA. HOOKS, INSTALL ON SHORT SIDES OF HATCH OPENING. FLOATS SHALL BE POSITIONED TO MINIMIZE INTERFERENCE WITH ULTRASONIC TRANSDUCER AND THE PUMP CABLES. IF POSSIBLE, PLACE FLOATS ON OPPOSITE SIDE OF WET WELL FROM SANITARY SEWER INLET.
9. PIPE PENETRATIONS TO BE LOCATED 12" MIN FROM JOINTS IN WET WELL AND VALVE VAULT.
10. CONTRACTOR MUST PROVIDE A 24 HOUR 7 DAY EMERGENCY CONTACT TELEPHONE NUMBER TO CONTACT A RESPONSIBLE PERSON IN CASE OF AN EMERGENCY.
11. EPOXY BONDING AGENT SHALL BE APPLIED TO PRECAST STRUCTURE BEFORE APPLICATION OF GROUT AROUND PRESSURIZED PIPES THROUGH THE WALLS.
12. ALL CONCRETE WORK SHALL BE IN ACCORDANCE WITH FLORIDA BUILDING CODE(FBC) AND ACI 318
13. CEMENT SHALL CONFORM TO THE REQUIREMENTS OF ASTM C-150.
14. CONCRETE CLASS AND STRENGTH ARE TO BE DETERMINED BY STANDARD LABORATORY CYLINDER TEST, AS PER ASTM C-31 & C-39, AND SHALL BE CLASS A, 4000 PSI AT 28 DAYS.
15. REINFORCEMENT STEEL SHALL BE DEFORMED, NEW BILLET STEEL AND SHALL CONFORM TO THE REQUIREMENTS OF ASTM A-615, GRADE 60.
16. CONCRETE COVER FOR STEEL REINFORCEMENT SHALL BE AS SPECIFIED IN ACI 318.
17. WET WELL SECTIONS AND PRECAST UNITS SHALL CONFORM TO ASTM C478.
18. USE RAMNECK JOINT FILLER IN PRECAST JOINTS, COVER JOINTS WITH MORTAR.
19. ALL MOUNTING HARDWARE SHALL BE STAINLESS STEEL, TYPE 304 MIN.
20. CONTRACTOR SHALL PREPARE, GET APPROVAL FROM THE REQUIRED AGENCIES, AND IMPLEMENT THE APPROVED M.O.T. PLAN FOR THE DURATION OF CONSTRUCTION.
21. EXISTING UTILITIES/FACILITIES SHOWN ARE BASED ON THE AVAILABLE INFORMATION. CONTRACTOR IS RESPONSIBLE TO VERIFY THE LOCATION, TYPE AND SIZE OF ALL EXISTING UTILITIES/FACILITIES WHETHER SHOWN OR NOT SHOWN ON THE PLANS. IF AN EXISTING FACILITY IS FOUND TO CONFLICT WITH THE PROPOSED CONSTRUCTION, THE CONTRACTOR SHALL IMMEDIATELY NOTIFY THE ENGINEER OF RECORD SO THAT APPROPRIATE MEASURES CAN BE TAKEN TO RESOLVE THE CONFLICT.
22. CONTRACTOR SHALL PRESERVE EXISTING FEATURES OF ADJACENT PROPERTIES (PAVING, CURBING, FENCING, LANDSCAPING ETC...). ANY AREAS/ FACILITIES DISTURBED BY THE CONTRACTOR SHALL BE REPAIRED TO ITS ORIGINAL STATE OR BETTER TO THE SATISFACTION OF THE OWNER AT THE CONTRACTOR'S OWN EXPENSE.
16. BY-PASS PUMPS MUST MEET NOISE REQUIREMENTS PER CITY OF HALLANDALE CODE OF ORDINANCES.
17. EXISTING WATER METER SHALL BE RELOCATED BY THE CITY OF HALLANDALE. CONTRACTOR SHALL COORDINATE WITH CITY.
18. PROVIDING HEAVY EQUIPMENT ACCESS TO THE SITE IS EXCLUSIVELY THE RESPONSIBILITY OF THE CONTRACTOR AND SHALL BE INCLUDED IN THE BID AMOUNT. THE PROSPECTIVE BIDDER SHALL VISIT THE LIFT STATION SITE AND BE FAMILIAR WITH THE SITE CONDITIONS. NO ADDITIONAL PAYMENT FOR HEAVY EQUIPMENT CONFLICT WITH TREES, STRUCTURES, UTILITIES, ETC. SHALL BE PROVIDED TO THE CONTRACTOR. NO ADDITIONAL COMPLETION TIME EXTENSIONS SHALL BE GRANTED DUE TO DELAYS RELATED TO THE ABOVE INDICATED ITEMS.
19. CONTRACTOR SHALL PREPARE A STORMWATER POLLUTION PREVENTION PLAN AS PART OF NPDES REQUIREMENT.

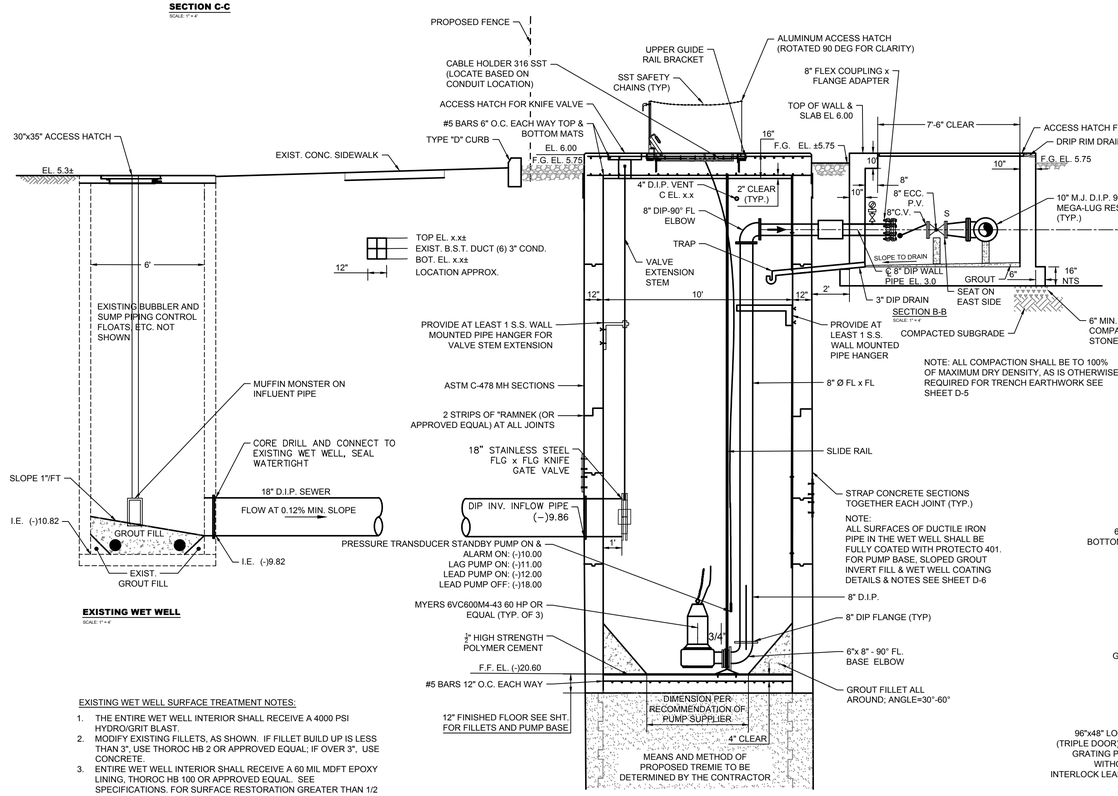

LIFT STATION ELEVATION SECTION B-B
SCALE: 1"=4'

EXISTING WET WELL SURFACE TREATMENT NOTES:

1. THE ENTIRE WET WELL INTERIOR SHALL RECEIVE A 4000 PSI HYDRO/GRIT BLAST.
2. MODIFY EXISTING FILLETS, AS SHOWN. IF FILLET BUILD UP IS LESS THAN 3", USE THOROC HB 2 OR APPROVED EQUAL; IF OVER 3", USE CONCRETE.
3. ENTIRE WET WELL INTERIOR SHALL RECEIVE A 60 MIL MDFT EPOXY LINING. THOROC HB 100 OR APPROVED EQUAL. SEE SPECIFICATIONS. FOR SURFACE RESTORATION GREATER THAN 1/2 INCH THICK, PRE APPLY THOROC SP 15.

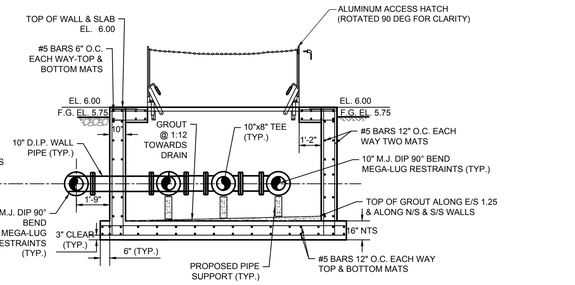

SECTION A-A
SCALE: 1"=4'

PAINTINGS AND COATINGS NOTES:

1. THE INTERIOR CONCRETE SURFACES OF THE WETWELL, VALVE VAULT, THE INTERIOR OF THE CONVERTED MANHOLE INCLUDING THE EXPOSED BOTTOM OF TOP SLABS, AND DUCTILE IRON PIPE AND FITTINGS INSIDE THE WET WELL SHALL BE COATED WITH EPOXYTEC UROFLEX (ITEM# UME38), APPLIED PER MANUFACTURER RECOMMENDATIONS. UROFLEX SHALL BE APPLIED IN A MINIMUM OF TWO (2) COATS, 50 MILS DFT TOTAL. FIRST COAT COLOR TO BE TAN; FINAL COLOR TO BE RED. SURFACE PREPARATION, PRIMING AND APPLICATION SHALL BE IN ACCORDANCE WITH THE MANUFACTURER'S SPECIFICATIONS AND SHALL BE WARRANTED FOR A PERIOD OF FIVE YEARS BY THE MANUFACURER. COATING MANUFACTURER SHALL INSPECT AND CERTIFY THE CEMENT WORK AND COATING. THE EXTERIOR OF THE WET WELL SHALL BE COATED WITH A COAL TAR EPOXY SUCH AS CARBOLINE 300M OR APPROVED EQUAL.
2. DUCTILE IRON PIPE AND FITTINGS: DIP EXTERIOR SURFACES SHALL BE COATED WITH A 100% POLYAMINE EPOXY SPECIFICALLY DESIGNED FOR WASTEWATER IMMERSION AND LOW PERMEATION TO H2S GAS. MATERIAL SHALL BE TNEMEC PERMA-GLAZE, SERIES 435, OR APPROVED EQUAL, APPLIED IN TWO (2) COATS 20 MILS (DFT) EACH (40.0 MIL DFT, TOTAL). DIP INTERIOR SURFACES SHALL BE COATED WITH 40 MILS (DFT) OF PROTECTO 401. SURFACE PREPARATION AND APPLICATION SHALL BE IN ACCORDANCE WITH THE MANUFACTURER'S RECOMMENDATION. CERTIFICATION OF MANUFACTURER SHALL BE PROVIDED.
3. VALVES SHALL RECEIVE ONLY THE FINAL 20 MIL (DFT) COAT. FINAL COLOR TO BE BEIGE. SURFACE PREPARATION, PRIMING AND APPLICATION SHALL BE IN ACCORDANCE WITH THE MANUFACTURER'S RECOMMENDATIONS. CERTIFICATION OF MANUFACTURER SHALL BE PROVIDED.
4. PUMPS SHALL BE PROTECTED BY A FACTORY APPLIED SPRAY COATING OF ACRYLIC DISPERSION ZINC PHOSPHATE PRIMER WITH A POLYESTER RESIN PAINT FINISH ON THE EXTERIOR OF THE PUMP.

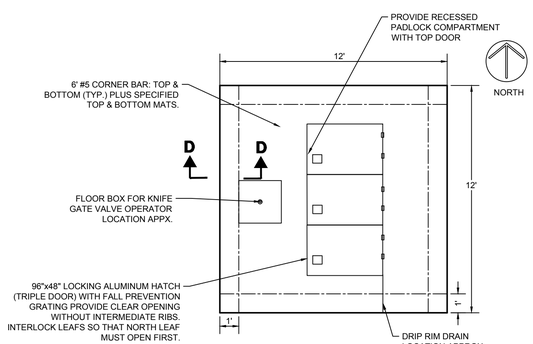

WET WELL ROOF PLAN
SCALE: 1"=4'

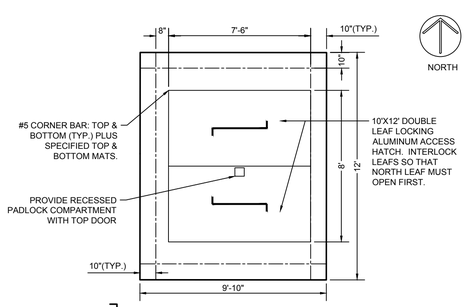

VALVE VAULT ROOF PLAN
SCALE: 1"=4'

SHEAR RING DETAIL
N.T.S.

DATE:	07-03-2019
SCALE:	AS SHOWN
DESIGN BY:	PJG
DRAWN BY:	DLC
CHECKED BY:	PJG
APPROVED BY:	PJG

DATE:	BY:	DESCRIPTION:

CRAVEN • THOMPSON AND ASSOCIATES, INC.
ENGINEERS • PLANNERS • SURVEYORS
3563 N.W. 53RD STREET, FORT LAUDERDALE, FLORIDA 33309
FAX: (954) 739-6409 TEL.: (954) 739-6400
FLORIDA LICENSED ENGINEERING, SURVEYING & MAPPING BUSINESS No. 271
FLORIDA LICENSED LANDSCAPE ARCHITECTURE BUSINESS No. C000114

MATERIAL SHOWN HEREON IS THE PROPERTY OF CRAVEN, THOMPSON & ASSOCIATES, INC. AND SHALL NOT BE REPRODUCED IN WHOLE OR IN PART WITHOUT WRITTEN PERMISSION OF CRAVEN THOMPSON & ASSOCIATES, INC.

PUMP STATION NO. 8 REPLACEMENT

PREPARED FOR:
CITY OF HALLANDALE BEACH

PUMP STATION DETAILS

Patrick J. Gibney, State of Florida, Professional Engineer, License No. 49428

This item has been digitally signed and sealed by Patrick J. Gibney, PE. on the date adjacent to the seal.

Printed copies of this document are not considered signed and sealed and the signature must be verified on any electronic copies.

Patrick J. Gibney
Florida P.E. No. 49428

PROJECT NO.
17-0039-001-02

D-1

SHEET 5 OF 28

R:\Engineering\2017\17-0039-001-02 Hallandale PS 08\Drawings\17-0039-001-02-D-1.dwg [D-1] Sep 03, 2019 12:03pm DCHIN

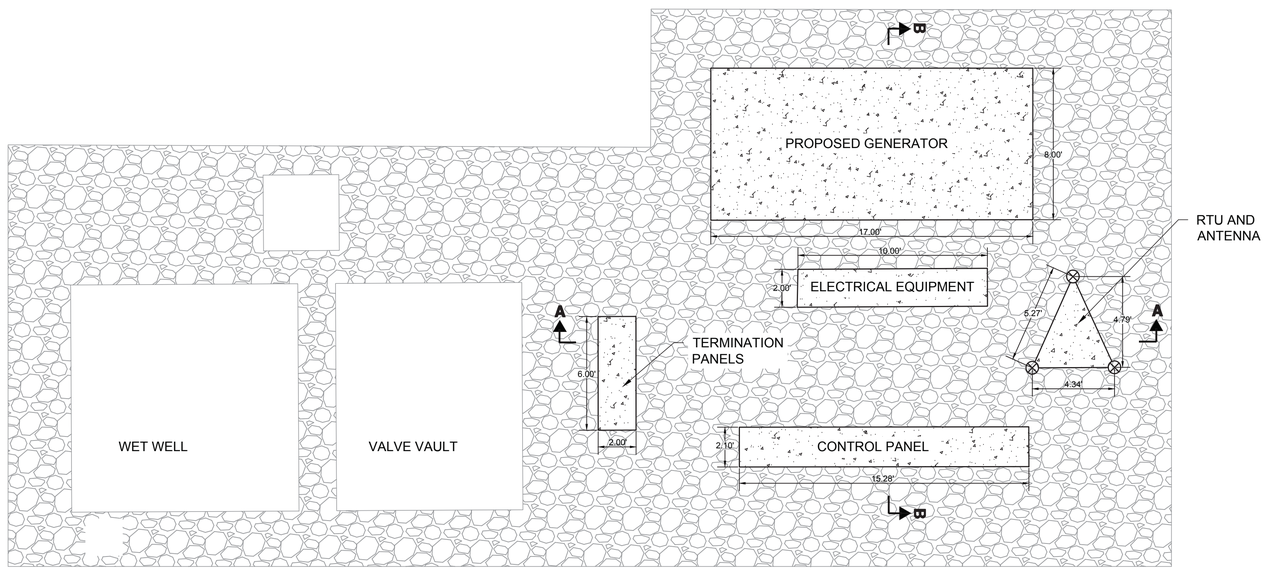

NOTES:

1. CONCRETE PADS ARE SHOWN FOR REFERENCE ONLY. NO STRUCTURAL CALCULATIONS WERE DONE FOR THE DESIGN OF THESE CONCRETE PADS.
2. 12" COMPACTED CRUSHED STONE BEDDING UNDER GENERATOR CONCRETE PAD.
3. 6" COMPACTED CRUSHED STONE BEDDING UNDER CONTROL PANEL, ELECTRICAL EQUIPMENT AND TERMINATION PANEL CONCRETE PADS.
4. COMPACTED SUBGRADE SHALL BE PLACED UNDER THE COMPACTED CRUSHED STONE.

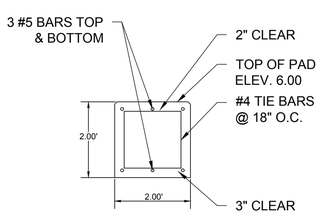

TERMINATION PANEL PAD

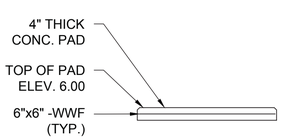

RTU AMD ANTENNA PAD

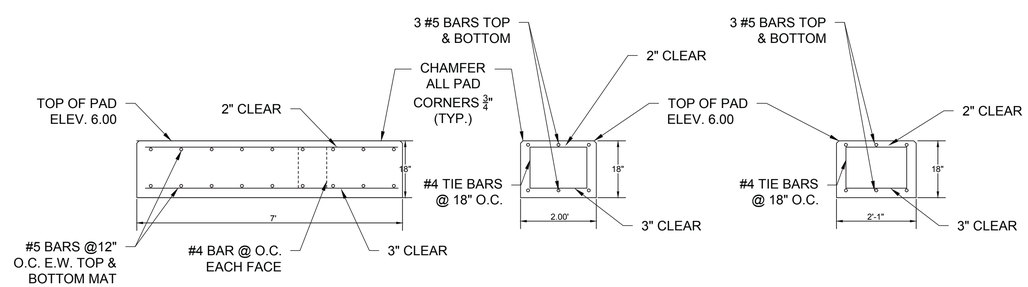

GENERATOR PAD **ELECTRICAL EQUIPMENT PAD** **CONTROL PANEL PAD**

SECTION A-A
N.T.S.

SECTION B-B
N.T.S.

ALL PROPOSED AND EXISTING ELEVATIONS ARE SHOWN IN N.A.V.D. 1988 DATUM.

DATE:	07-03-2019
SCALE:	AS SHOWN
DESIGN BY:	PJG
DRAWN BY:	DLC
CHECKED BY:	PJG
APPROVED BY:	PJG

BY:	DATE:	DESCRIPTION:

CRAVEN • THOMPSON AND ASSOCIATES, INC.
ENGINEERS • PLANNERS • SURVEYORS
3563 N.W. 53RD STREET, FORT LAUDERDALE, FLORIDA 33309
FAX: (954) 739-6409 TEL.: (954) 739-6400
FLORIDA LICENSED ENGINEERING, SURVEYING & MAPPING BUSINESS No. 271
FLORIDA LICENSED LANDSCAPE ARCHITECTURE BUSINESS No. C000114

MATERIAL SHOWN HEREON IS THE PROPERTY OF CRAVEN THOMPSON & ASSOCIATES, INC. AND SHALL NOT BE REPRODUCED IN WHOLE OR IN PART WITHOUT PERMISSION OF CRAVEN THOMPSON & ASSOCIATES, INC.
CRAVEN THOMPSON & ASSOCIATES, INC. ARCHITECT. ALL RIGHTS RESERVED © 2019

PUMP STATION NO. 8
REPLACEMENT

PREPARED FOR:
CITY OF HALLANDALE BEACH

PUMP STATION DETAILS

Patrick J. Gibney, State of Florida, Professional Engineer, License No. 49428

This item has been digitally signed and sealed by Patrick J. Gibney, PE. on the date adjacent to the seal.

Printed copies of this document are not considered signed and sealed and the signature must be verified on any electronic copies.

Patrick J. Gibney
Florida P.E. No. 49428

PROJECT NO.
17-0039-001-02

D-2

R:\Engineering\2017\17-0039-001-02 Hallandale PS 08\Drawings\17-0039-001-02-D-2.dwg [D-2] Aug 17, 2019 12:23am DCHIN

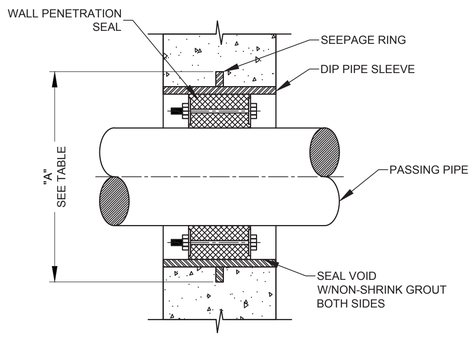

NOTES:

1. ALL DIMENSIONS ARE GIVEN IN INCHES.
2. USE ON NEW CONSTRUCTION, UNLESS OTHERWISE APPROVED BY BCWWS.

PIPE SIZE	NOMINAL SLEEVE DIA	"A"	PIPE SIZE	NOMINAL SLEEVE DIA	"A"
2	4	6	12	16	19
2-1/2	4	7	14	18	21
3	5	7-1/2	16	20	23-1/2
4	6	9	18	22	25
6	10	13	20	24	27-1/2
8	12	15	24	28	32
10	14	17			

WALL SLEEVE PENETRATION DETAIL
NTS

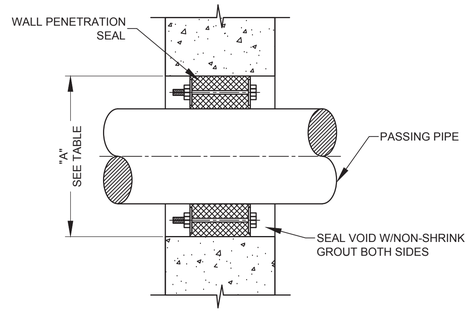

NOTES:

1. ALL DIMENSIONS ARE GIVEN IN INCHES.
2. USE ON EXISTING CONSTRUCTION.

PIPE SIZE	"A"	PIPE SIZE	"A"
2	4	12	16
2-1/2	4	14	18
3	5	16	20
4	6	18	24
6	10	20	24
8	12	24	30
10	14		

CORE DRILL PENETRATION DETAIL
NTS

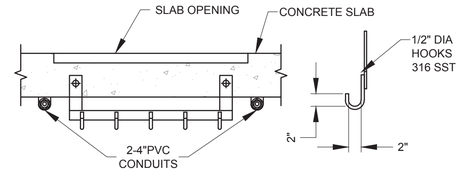

CABLE HOLDER / CONDUIT DETAIL
DETAIL
NTS

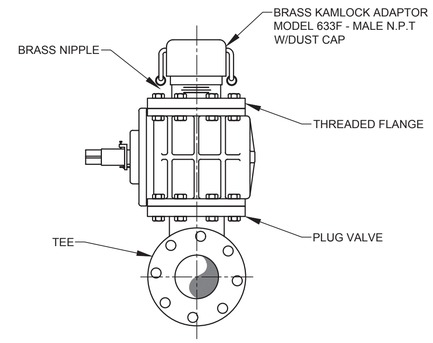

PUMP OUT CONNECTION DETAIL
NTS

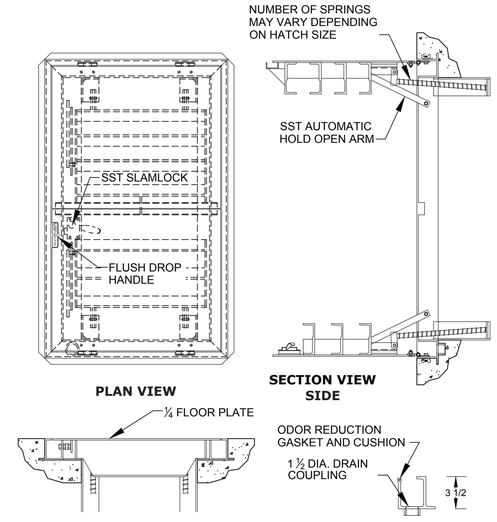

NOTE: ALL STRUCTURES LOCATED IN THE RIGHT-OF-WAY MUST USE THIS COVER UNLESS WWS DIRECTS OTHERWISE.

TROUGH FRAME, HEAVY-DUTY, DOUBLE ACCESS DOOR COVER (THD)
DETAIL
NTS

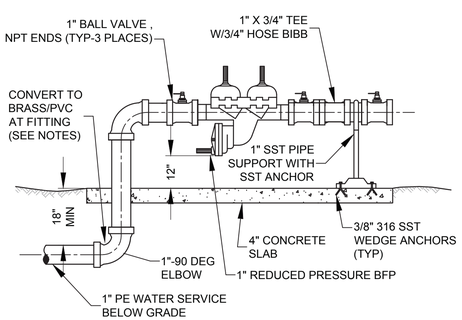

NOTES:

1. BACKFLOW PREVENTER LOCATED INSIDE FENCED AREA SHALL BE FEBCO MODEL 825YA (OR APPROVED EQUAL) AND SHALL USE SCHED 40 BRASS FOR ALL ABOVEGROUND PIPE/FITTINGS AND VALVES.
2. BACKFLOW PREVENTER LOCATED OUTSIDE FENCED AREA SHALL BE UV RESISTANT COMPOSITE PLASTIC UBS RP-500 (OR APPROVED EQUAL) AND SHALL USE SCHED 40 PVC FOR ALL ABOVE GROUND PIPE/FITTINGS.

BACKFLOW PREVENTER DETAILS
NTS

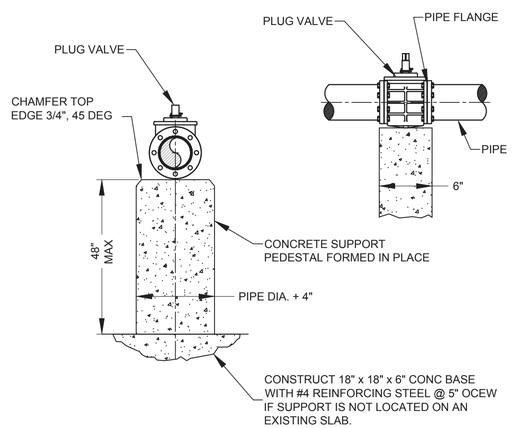

NOTES:

1. CONCRETE SHALL BE 4000 PSI, UNREINFORCED.
2. SEE PLANS AND SECTIONS FOR PIPE ELEVATION REQUIREMENT.
3. PIPE SUPPORT SUITABLE FOR PIPE SIZES 3" THROUGH 24" DIA.
4. SUPPORT STRAIGHT PIPE SECTION, FITTING OR PLUG VALVE. DO NOT PLACE UNDER CHECK VALVE.

PIPE SUPPORT - CONCRETE PEDESTAL DETAIL
NTS

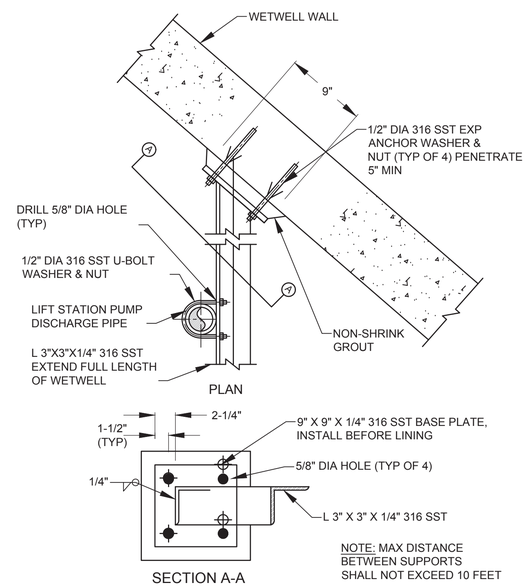

NOTE: MAX DISTANCE BETWEEN SUPPORTS SHALL NOT EXCEED 10 FEET

LIFT STATION PUMP DISCHARGE PIPE SUPPORT DETAIL
NTS

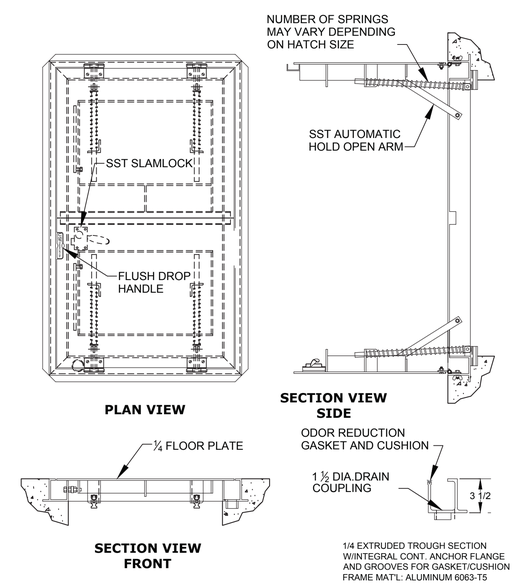

NOTE: ALL STRUCTURES LOCATED IN EASEMENTS MUST USE THIS COVER UNLESS WWS DIRECTS OTHERWISE.

TROUGH FRAME, PEDESTRIAN, DOUBLE ACCESS DOOR COVER (TPD)
DETAIL
NTS

DATE:	07-03-2019
SCALE:	AS SHOWN
DESIGN BY:	PJG
DRAWN BY:	DLC
CHECKED BY:	PJG
APPROVED BY:	PJG

DATE:	BY:	DESCRIPTION:

CRAVEN • THOMPSON AND ASSOCIATES, INC.
ENGINEERS • PLANNERS • SURVEYORS
3563 N.W. 53RD STREET, FORT LAUDERDALE, FLORIDA 33309
FAX: (954) 739-6409 TEL.: (954) 739-6400
FLORIDA LICENSED ENGINEERING, SURVEYING & MAPPING BUSINESS No. 271
FLORIDA LICENSED LANDSCAPE ARCHITECTURE BUSINESS No. C000114

MATERIAL SHOWN HEREON IS THE PROPERTY OF CRAVEN THOMPSON & ASSOCIATES, INC. AND SHALL NOT BE REPRODUCED IN WHOLE OR IN PART WITHOUT PERMISSION OF CRAVEN THOMPSON & ASSOCIATES, INC. CRAVEN THOMPSON & ASSOCIATES, INC. COPYRIGHT © 2019

PUMP STATION NO. 8 REPLACEMENT

PREPARED FOR:
CITY OF HALLANDALE BEACH

PUMP STATION DETAILS

Patrick J. Gibney, State of Florida, Professional Engineer, License No. 49428

This item has been digitally signed and sealed by Patrick J. Gibney, PE. on the date adjacent to the seal.

Printed copies of this document are not considered signed and sealed and the signature must be verified on any electronic copies.

Patrick J. Gibney
Florida P.E. No. 49428

PROJECT NO.
17-0039-001-02

D-3

SHEET 7 OF 28

R:\Engineering\2017\17-0039-001-02 Hallandale PS 08\Drawings\17-0039-001-02-D-3.dwg [D-3] Aug 17, 2019 12:24am DCHIN

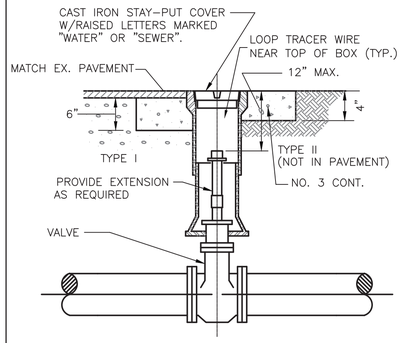

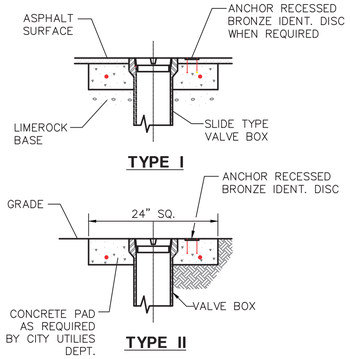

NOTE:

1. VALVE BOX RISERS SHALL BE PLACED AND MAINTAINED IN VERTICAL POSITION.
2. ALL VALVE BOXES SHALL BE RATED FOR VEHICULAR TRAFFIC.

VALVE AND BOX

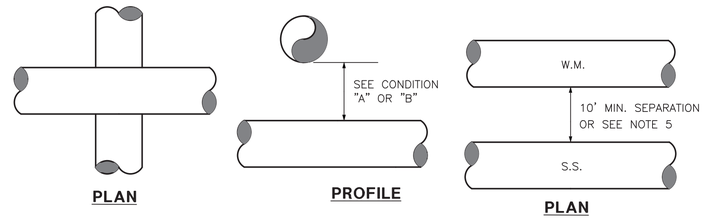

MAINS CROSSING

HORIZONTAL SEPARATION

CONDITION "A"

MINIMUM VERTICAL SEPARATION SHALL BE 18" OR SEWER MAIN MUST BE DUCTILE IRON OR AWWA C-900 P.V.C. PRESSURE PIPE FOR A CONTINUOUS LENGTH OF 20' CENTERED AT THE WATER MAIN ON BOTH TYPES OF PIPE.

CONDITION "B"

SEWER MAIN MUST BE DUCTILE IRON PIPE OR AWWA C-900 P.V.C. PRESSURE PIPE FOR A CONTINUOUS LENGTH OF 20' CENTERED AT THE WATER MAIN REGARDLESS OF VERTICAL CLEARANCE.

1) ALL SANITARY SEWER LATERALS SHALL CONFORM TO CONDITION "A".
2) WHEN BOTH MAINS ARE DUCTILE IRON PIPE OR AWWA C-900 PVC PRESSURE PIPE, MINIMUM VERTICAL CLEARANCE SHALL BE 6".
3) WHEN USING TYPE PSM SDR-35 PVC. A 20' LENGTH OF DUCTILE IRON PIPE MAY BE USED AS A CASING PIPE IN LIEU OF THE ABOVE. SEAL BOTH ENDS WITH GROUT.
4) CONCRETE ENCASEMENT SHALL NOT BE ACCEPTED BY THE DEPARTMENT IN LIEU OF THE ABOVE. DUCTILE IRON PIPE (D.I.P.) MAY BE UTILIZED.
5) THE SEWER MAIN MUST BE DUCTILE IRON PIPE OR AWWA C-900 PVC PRESSURE PIPE UNTIL 10' SEPARATION IS OBTAINED.

WATER & SANITARY SEWER MAINS CROSSING

N.T.S.

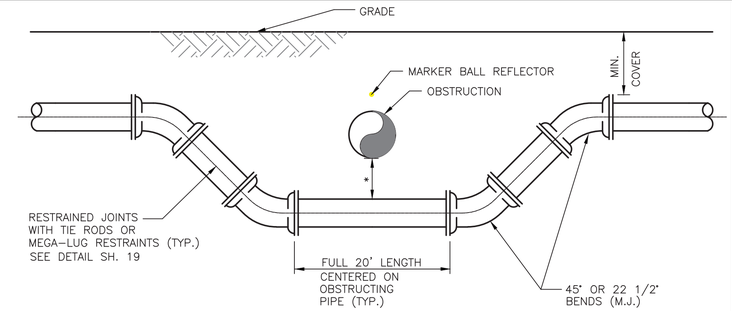

SPECIAL UTILITY CROSSING-FITTING TYPE

* 18" MIN. CLEARANCE REQUIRED FOR WATER AND SEWER MAIN CROSSINGS.
12" MIN. CLEARANCE REQUIRED FOR OTHER TYPE UTILITIES CROSSINGS.
6" MIN. IF 20' LONG D.I.P. USED UNDER OBSTRUCTION.

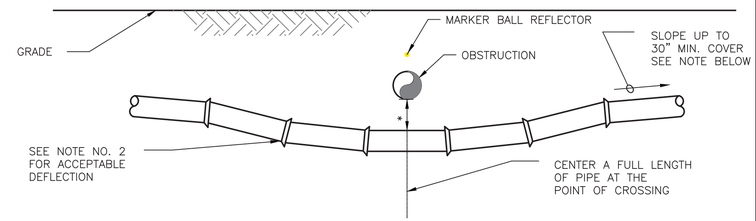

STANDARD UTILITY CROSSING-DEFLECTION TYPE

NOTE:

1) THE DEFLECTION TYPE CROSSING SHALL BE USED WHEREVER POSSIBLE. ONLY WITH APPROVAL OR DIRECTION BY THE ENGINEER SHALL THE FITTING TYPE CROSSING BE ALLOWED.
2) CONSTRUCT STANDARD CROSSING USING 75% OF MANUFACTURER'S MAXIMUM JOINT DEFLECTION.
3) TIE RODS MAY BE OMITTED WHEN OTHER APPROVED METHODS OF RESTRAINING ARE UTILIZED, SUCH AS MEGA-LUG RESTRAINTS.

UTILITY CROSSINGS

N.T.S.

NOTE: APPROPRIATE MEGA-LUG JOINT RESTRAINTS AND/OR PUSH-ON JOINT HARNESSES MAY BE USED IN LIEU OF TIE RODS.

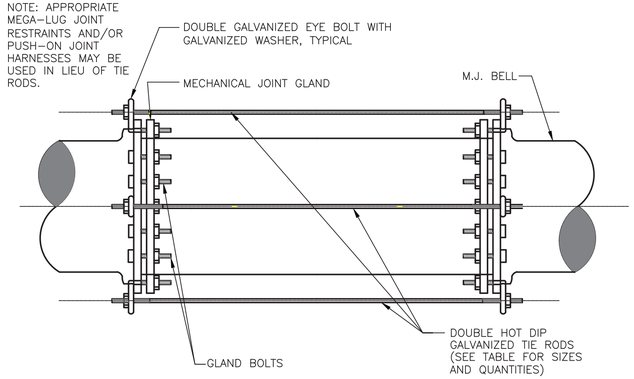

NOTE: EYE BOLT = GLAND BOLT

COAT ALL TIE RODS WITH AN APPROVED COAL TAR EPOXY ENAMEL AFTER ASSEMBLY, 2 COATS MIN.

PRESSURE AT 100 P.S.I.			PRESSURE AT 150 P.S.I.		
PIPE SIZE	ROD DIAMETER	No. OF RODS	PIPE SIZE	ROD DIAMETER	No. OF RODS
8" & SMALLER	3/4"	2	6"	3/4"	2
12"	3/4"	2	8"	3/4"	3
16"	3/4"	4	12"	3/4"	4
20"	3/4"	6			
24"	3/4"	10			
30"	1"	8			
36"	1"	12			
40"	1 1/4"	10			
48"	1 1/4"	12			

TYPICAL TIE-ROD DETAILS

N.T.S

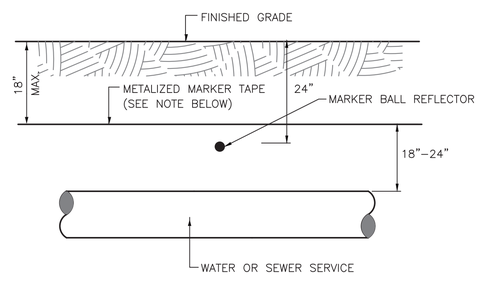

NOTES:

1. MARKING TAPE SHALL BE INSTALLED WITH ALL NEW WATER OR FORCE MAINS CONTINUOUSLY FOR THE ENTIRE LENGTH OF THE LINE. THE TAPE SHALL BE METALLIZED AND SHALL BE IMPRINTED WITH THE CONTINUOUS MESSAGE "CAUTION (WATER)(SEWAGE FORCE MAIN) BURIED BELOW". THE TAPE MUST CONFORM TO ALLEN SYSTEMS, INC. DETECTABLE, THE TAPE MUST CONFORM TO ALLEN SYSTEMS, INC. DETECTABLE TERRA-TYPE OR AN APPROVED EQUAL, MINIMUM WIDTH SHALL BE" AND THE MAXIMUM DEPTH OF BURIAL SHALL BE 18". (NOTE: CHOOSE APPROPRIATE LEGEND)
2. USE MARKER TAPE FOR 6" AND LARGER WATER OR FORCE MAINS.

MARKER TAPE DETAIL

N.T.S

USE OF RESTRAINED JOINTS TO RESIST THRUST AT FITTINGS AND VALUES					
REQUIRED MINIMUM LENGTH OF STRAIGHT PIPE BEFORE DEAD ENDS AND BEFORE AND AFTER BENDS					
FOR WATER MAINS AND FORCE MAINS (WATER, RECLAIMED WATER, SEWAGE, STORM MAINS)"					
PIPE SIZE	DEAD END: TEE, VALVE & PLUG	90° BEND	45° BEND	22-1/2° BEND	11-1/4° BEND
4"	30'	20'	10'	4'	2'
6"	40'	30'	15'	8'	4'
8"	50'	36'	16'	10'	6'
10"	60'	45'	20'	12'	6'
12"	70'	50'	24'	14'	7'
14"	84'	60'	27'	15'	7'
16"	90'	66'	28'	16'	8'
18"	98'	74'	33'	17'	8'
20"	102'	78'	36'	18'	8'
24"	115'	88'	38'	20'	10'

1. GENERALLY THRUST BLOCKS SHALL BE USED TO RESTRAIN FITTING REACTION FORCES.
2. STRINGS OF HARNESSED & RESTRAINED JOINT PIPES SHALL ONLY BE USED WHERE DIRECTED AND TO RESTRAIN IN-LINE VALVES WHICH MIGHT BLOW OFF OR ON THE TOP ELBOW OF A BEND DOWN, WHERE PLACEMENT OF A THRUST BLOCK IS NOT PRACTICAL.

MINIMUM LENGTHS OF RESTRAINED JOINT (MEGA-LUG) PIPE FOR VARIOUS FITTINGS

DATE:	07-03-2019
SCALE:	AS SHOWN
DESIGN BY:	PJG
DRAWN BY:	DLC
CHECKED BY:	PJG
APPROVED BY:	PJG
DATE:	
BY:	
DESCRIPTION:	

CRAVEN • THOMPSON AND ASSOCIATES, INC.
ENGINEERS • PLANNERS • SURVEYORS
3563 N.W. 53RD STREET, FORT LAUDERDALE, FLORIDA 33309
FAX: (954) 739-6409 TEL.: (954) 739-6400
FLORIDA LICENSED ENGINEERING, SURVEYING & MAPPING BUSINESS No. 271
FLORIDA LICENSED LANDSCAPE ARCHITECTURE BUSINESS No. C000114

MATERIAL SHOWN HEREON IS THE PROPERTY OF CRAVEN THOMPSON & ASSOCIATES, INC. AND SHALL NOT BE REPRODUCED IN WHOLE OR IN PART WITHOUT PERMISSION OF CRAVEN THOMPSON & ASSOCIATES, INC. CRAVEN THOMPSON & ASSOCIATES, INC. COPYRIGHT © 2019

PUMP STATION NO. 8 REPLACEMENT

PREPARED FOR:
CITY OF HALLANDALE BEACH

PUMP STATION DETAILS

Patrick J. Gibney, State of Florida, Professional Engineer, License No. 49428

This item has been digitally signed and sealed by Patrick J. Gibney, PE. on the date adjacent to the seal.

Printed copies of this document are not considered signed and sealed and the signature must be verified on any electronic copies.

Patrick J. Gibney
Florida P.E. No. 49428

PROJECT NO.
17-0039-001-02

D-4

SHEET 8 OF 28

R:\Engineering\2017\17-0039-001-02 Hallandale PS 08\Drawings\17-0039-001-02-D-4.dwg [D-4] Aug 17, 2019 12:24am DCHIN

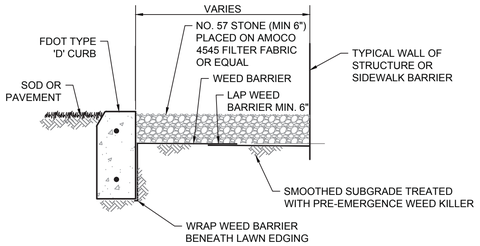

NOTE:
1. GALVANIZED STEEL LAWN EDGING TO BE COL-MET AS MANUFACTURED BY COLLIER METAL SPECIALTIES OR APPROVED EQUAL.

GRAVEL BUFFER & EDGING DETAIL
NOT TO SCALE

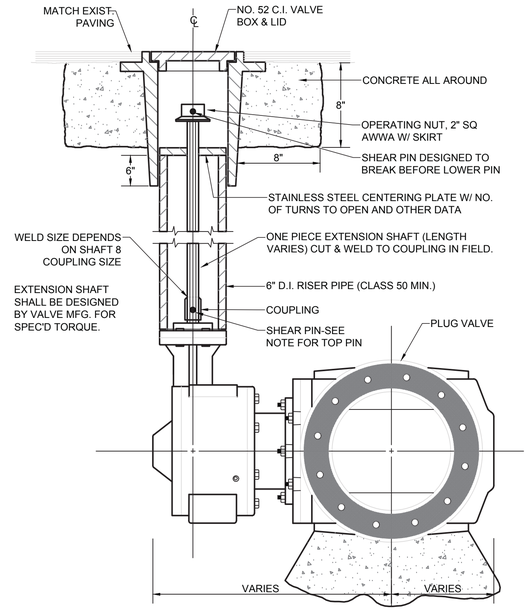

CONCRETE SUPPORT PAD
PLASTIC SHEET BETWEEN VALVE AND CONCRETE

TYPICAL PLUG VALVE INSTALLATION

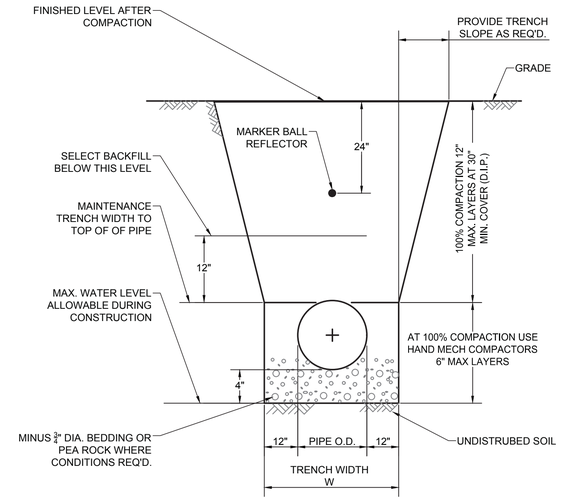

UNPAVED AREAS

TRENCH DETAIL
N.T.S.

GENERAL FOUNDATION NOTE

IF SOFT, COMPRESSABLE MATERIAL IS ENCOUNTERED AT THE PIPE, STRUCTURE OR EQUIPMENT PAD SUBGRADE LEVEL, THE CONTRACTOR SHALL REMOVE AND DISPOSE OF UP TO 2 VERTICAL FEET OF THAT MATERIAL, IF NECESSARY, UNTIL FIRM MATERIAL IS ENCOUNTERED, AND REPLACE IT WITH SAND OR BROKEN STONE COMPACTED TO 100% OF DRY MAXIMUM DENSITY AT NO ADDITIONAL COST TO THE CITY.

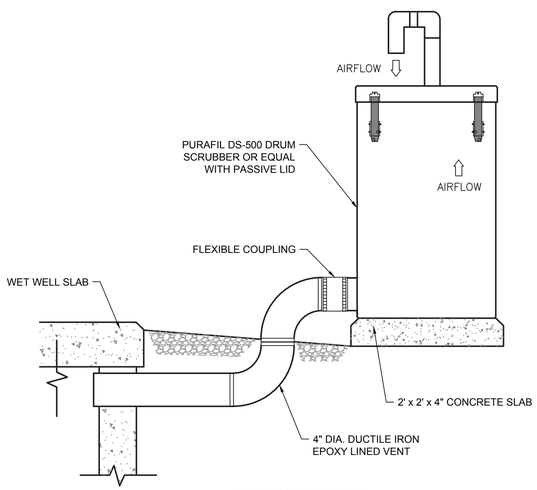

WET WELL VENT DETAIL
N.T.S.

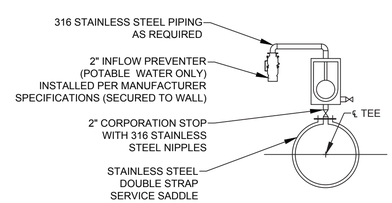

AIR RELEASE VALVE DETAIL (INSIDE VALVE VAULT)
N.T.S.

DATE:	07-03-2019
SCALE:	AS SHOWN
DESIGN BY:	PJG
DRAWN BY:	DLC
CHECKED BY:	PJG
APPROVED BY:	PJG

DESCRIPTION:	BY:	DATE:

CRAVEN • THOMPSON AND ASSOCIATES, INC.
ENGINEERS • PLANNERS • SURVEYORS
3563 N.W. 53RD STREET, FORT LAUDERDALE, FLORIDA 33309
FAX: (954) 739-6409 TEL.: (954) 739-6400
FLORIDA LICENSED ENGINEERING, SURVEYING & MAPPING BUSINESS No. 271
FLORIDA LICENSED LANDSCAPE ARCHITECTURE BUSINESS No. C000114

MATERIAL SHOWN HEREON IS THE PROPERTY OF CRAVEN THOMPSON & ASSOCIATES, INC. AND SHALL NOT BE REPRODUCED IN WHOLE OR IN PART, WITHOUT PERMISSION OF CRAVEN THOMPSON & ASSOCIATES, INC.
CRAVEN THOMPSON & ASSOCIATES, INC. COPYRIGHT © 2019

PUMP STATION NO. 8
REPLACEMENT

PREPARED FOR:
CITY OF HALLANDALE BEACH

PUMP STATION DETAILS

Patrick J. Gibney, State of Florida, Professional Engineer, License No. 49428

This item has been digitally signed and sealed by Patrick J. Gibney, PE. on the date adjacent to the seal.

Printed copies of this document are not considered signed and sealed and the signature must be verified on any electronic copies.

Patrick J. Gibney
Florida P.E. No. 49428

PROJECT NO.
17-0039-001-02

D-5

SHEET 9 OF 28

R:\Engineering\2017\17-0039-001-02 Hallandale PS 08\Drawings\17-0039-001-02-D-5.dwg [D-5] Aug 17, 2019 12:24am DCHN

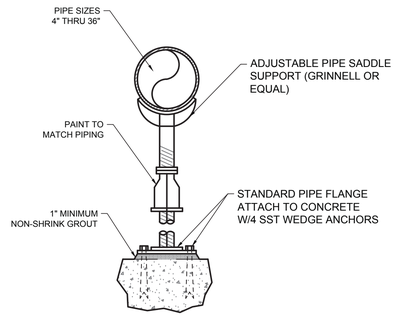

PIPE SUPPORT
N.T.S.

NOTE:

DURING FILLING & CALIBRATING GAUGE & DIAPHRAGM ASSEMBLY, SAFETY WIRE GAUGE BODY & DIAPRAGM TO PREVENT ROTATING GAUGE RELATIVE TO DIAPHRAGM.

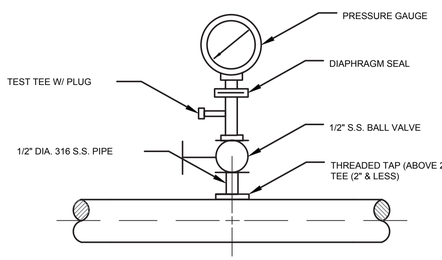

PRESSURE GAUGE DETAIL
N.T.S.

GENERAL NOTES:

1. ALL FENCE POSTS, BRACES, AND HARDWARE (LESS GROUNDING MATERIALS) SHALL BE HOT DIPPED VINYL COATED ALUMINIZED STEEL COLORED GREEN.
2. CONTRACTOR SHALL INSTALL GREEN PVC PRIVACY SLATS, FULL LENGTH OF FABRIC.
3. OVERALL HEIGHT OF FENCE SHALL BE 8'-0".
4. FABRIC & FABRIC TIES: 6 GAUGE CHAIN LINK, ALUMINUM, GREEN VINYL COATED.
5. GATE POSTS: 6-5/8" DIAM. STD. WEIGHT, WALL THICKNESS = .280".
6. TERMINAL POSTS: 4" DIAM. STD. WEIGHT, WALL THICKNESS = .226".
7. LINE POSTS: 2-1/2" DIAM. HYP. 40 PIPE, WALL THICKNESS = 0.130".
8. TOP RAIL: 1-5/8" DIAM. HYP. 40 PIPE, WALL THICK. = 0.111".
9. THE CONTRACTOR SHALL HAVE THE OPTION OF SUBSTITUTING BRACE ASSEMBLIES FOR 1264 L.F. OF MIDDLE RAIL: 1-5/8" DIAM. HYP. 40 PIPE, WALL THICK. = 0.111".
10. CONTRACTOR SHALL PROVIDE SINGLE OR DOUBLE LEAF GATES, AS REQUIRED. SIZES ARE SHOWN ON THE SITE PLAN.
11. TENSION WIRE SHALL BE 7-GAUGE COILED SPRING WIRE COATED SIMILARLY TO FABRIC.
12. WIRE FABRIC TIES SHALL BE HOG RINGS OR ALUMINIZED WIRE NOT LESS THAN 6-GAUGE.
13. CONCRETE SHALL BE COMMERCIAL GRADE WITH A MINIMUM 28-DAY COMPRESSIVE STRENGTH 0F 2500 PSI.
14. CONTRACTOR SHALL ENSURE THAT EACH ELEMENT OF THE FENCE IS GROUNDED. CONTRACTOR SHALL CLAMP A NO. 4 SOLID COPPER CONDUCTOR TO THE ROD AND THE FENCE AND GROUND GATE SECTIONS TO GATE POSTS WITH 4/0 WELDING LEAD.
15. ALL ALUMINUM ITEMS SHALL BE INSULATED FROM DIRECT CONTACT WITH DISSIMILAR METALS OR CONCRETE.
16. PROVIDE 3/8" ALUMINUM TRUSS ROD AND TURNBUCKLE ON GATES AND ON FIRST SPAN ON EACH SIDE OF CORNER POST.

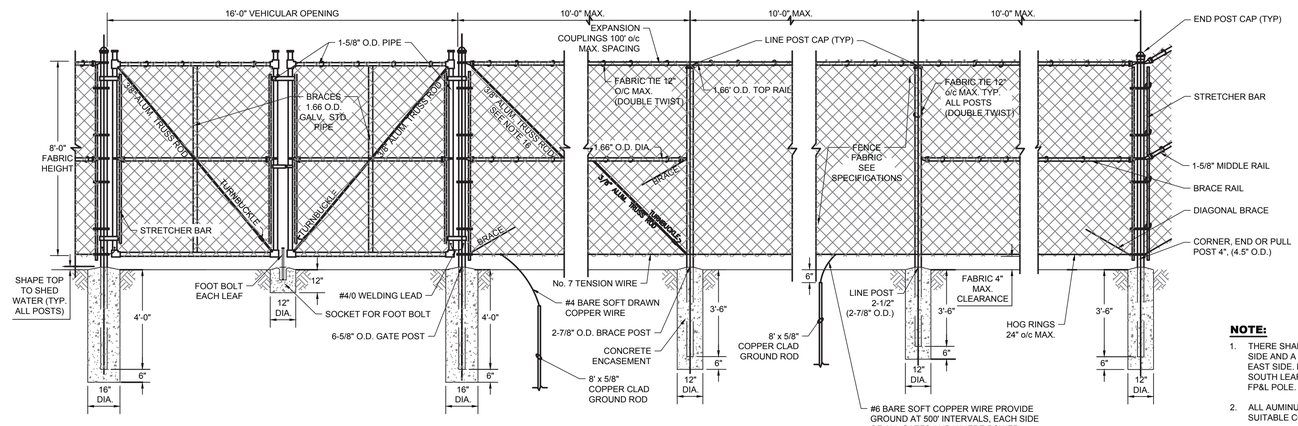

CHAIN LINK FENCE DETAIL
N.T.S

NOTE:

1. THERE SHALL BE A SINGLE LEAF 4' GATE ON THE SOUTH SIDE AND A FULL SPAN DOUBLE LEAF GATE ON THE EAST SIDE. NORTH LEAF SHALL BE SMALLER THAN THE SOUTH LEAF TO PREVENT INTERFERENCE WITH NEW FP&L POLE. SEE PLAN FOR DETAILS.
2. ALL AUMINUM IN CONTACT WITH CONCRETE SHALL BE SUITABLE COATED TO PREVENT GALVANIC ACTION.

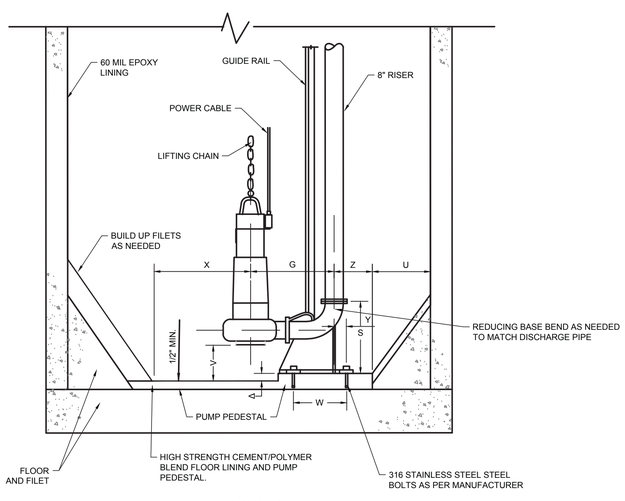

PUMP BASE DETAIL
N.T.S.

NOTES

1. THE ENTIRE WET WELL INTERIOR SHALL RECEIVE A 4000 PSI HYDRO/GRIT BLAST.
2. MODIFY EXISTING FILETS TO OBTAIN MANUFACTURE'S RECOMMENDED DIMENSIONS, IF FILET BUILD UP IS LESS THAN 3" USE FOSROC SP14 OR APPROVED EQUAL, IF OVER 3" USE CONCRETE.
3. CONCRETE FLOOR LINING SHALL BE HIGH STRENGTH, 7000 PSI, CEMENT/POLYMER BLEND, FOSROC SD-2 OR APPROVED EQUAL.
4. DIMENSIONS Δ , G, S, U, V, W, X, Y, & Z SHALL BE PER PUMP MANUFACTURE RECOMMENDATION.
5. ENTIRE WET WELL INTERIOR SHALL RECEIVE A 60 MIL MDFT EPOXY LINING, FOSROC HBS 100 OR APPROVED EQUAL. SEE SPECIFICATIONS.

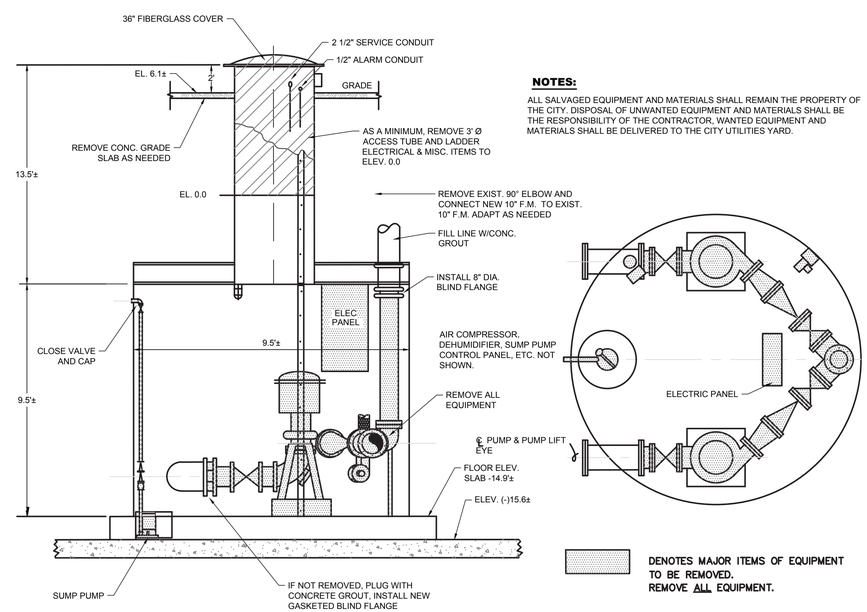

NOTES:

ALL SALVAGED EQUIPMENT AND MATERIALS SHALL REMAIN THE PROPERTY OF THE CITY. DISPOSAL OF UNWANTED EQUIPMENT AND MATERIALS SHALL BE THE RESPONSIBILITY OF THE CONTRACTOR. WANTED EQUIPMENT AND MATERIALS SHALL BE DELIVERED TO THE CITY UTILITIES YARD.

TYPICAL EXISTING DRY PIT STRUCTURE DEMOLITION
N.T.S.

DATE:	07-03-2019
SCALE:	AS SHOWN
DESIGN BY:	PJG
DRAWN BY:	DLC
CHECKED BY:	PJG
APPROVED BY:	PJG
DATE:	
BY:	
DESCRIPTION:	

CRAVEN • THOMPSON AND ASSOCIATES, INC.
ENGINEERS • PLANNERS • SURVEYORS
3563 N.W. 53RD STREET, FORT LAUDERDALE, FLORIDA 33309
TEL.: (954) 739-6400
FAX: (954) 739-6409
FLORIDA LICENSED ENGINEERING, SURVEYING & MAPPING BUSINESS No. 271
FLORIDA LICENSED LANDSCAPE ARCHITECTURE BUSINESS No. C000114

MATERIAL SHOWN HEREON IS THE PROPERTY OF CRAVEN THOMPSON & ASSOCIATES, INC. AND SHALL NOT BE REPRODUCED IN WHOLE OR IN PART WITHOUT PERMISSION OF CRAVEN THOMPSON & ASSOCIATES, INC. CRAVEN THOMPSON & ASSOCIATES, INC. ARCHITECTS AND ENGINEERS © 2019

PUMP STATION NO. 8 REPLACEMENT

PREPARED FOR:
CITY OF HALLANDALE BEACH

PUMP STATION DETAILS

Patrick J. Gibney, State of Florida, Professional Engineer, License No. 49428

This item has been digitally signed and sealed by Patrick J. Gibney, PE. on the date adjacent to the seal.

Printed copies of this document are not considered signed and sealed and the signature must be verified on any electronic copies.

Patrick J. Gibney
Florida P.E. No. 49428

PROJECT NO.
17-0039-001-02

D-6

SHEET 10 OF 28

R:\Engineering\2017\17-0039-001-02 Hallandale PS 08\Drawings\17-0039-001-02-D-6.dwg [D-6] Aug 17, 2019 12:24am DCHIN

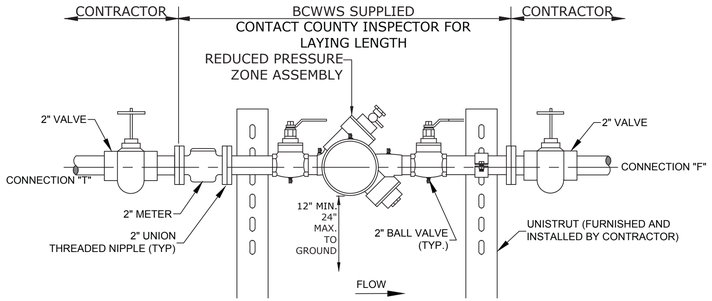

JUMPER ASSEMBLY

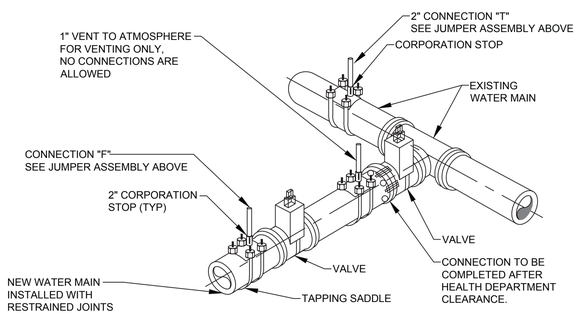

NOTES:
1. A BCWWS SUPPLIED FIRE HYDRANT BACKFLOW METER WITH RPZ MAY BE USED IN LIEU OF THE JUMPER ASSEMBLY.
2. SEE DETAIL 205B FOR ADDITIONAL REQUIREMENTS.

FILLING AND FLUSHING CONNECTION

BCWWS DETAIL 205 (N.T.S.)

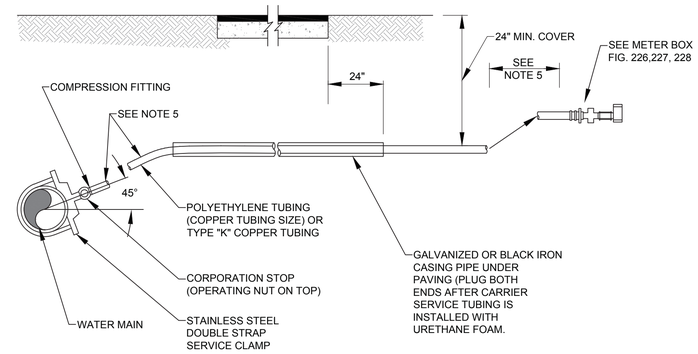

NOTES:

1. SUCCESSIVE TAPS INTO THE WATER MAIN SHALL BE SPACED NOT LESS THAN 18" ON CENTER. NO TAPS SHALL BE CLOSER THAN 18" TO A JOINT.
2. 1" SERVICE REQUIRE A 2" MINIMUM INSIDE DIAMETER CASING PIPE.
3. 2" SERVICE REQUIRE A 3" MINIMUM INSIDE DIAMETER CASING PIPE.
4. ALL CASING PIPE SHALL EXTEND A MINIMUM OF 2' BEYOND THE EDGE OF PAVED STREETS.
5. FOR 1" SERVICE LINES THE MINIMUM RADIUS SHALL BE 14".
   FOR 2" SERVICE LINES THE MINIMUM RADIUS SHALL BE 21".
6. ALL CASING PIPE ENDS SHALL BE FILED SMOOTH WITH NO BURRS AND SEALED WITH URETHANE FOAM.
7. THE POLYETHYLENE OR COPPER TUBING SHALL BE ONE CONTINUOUS PIECE FROM THE CORPORATION STOP TO THE CHECK VALVE. NO JOINTS WILL BE PERMITTED BETWEEN THESE POINTS.

THIS DETAIL APPLIES ONLY TO RESIDENTIAL ROADS WITH LESS THAN 70' R.O.W. (NO MEDIAN) OR WITHIN EASEMENTS

TYPE 1 WATER SERVICE CONNECTION

BCWWS DETAIL 221 (N.T.S.)

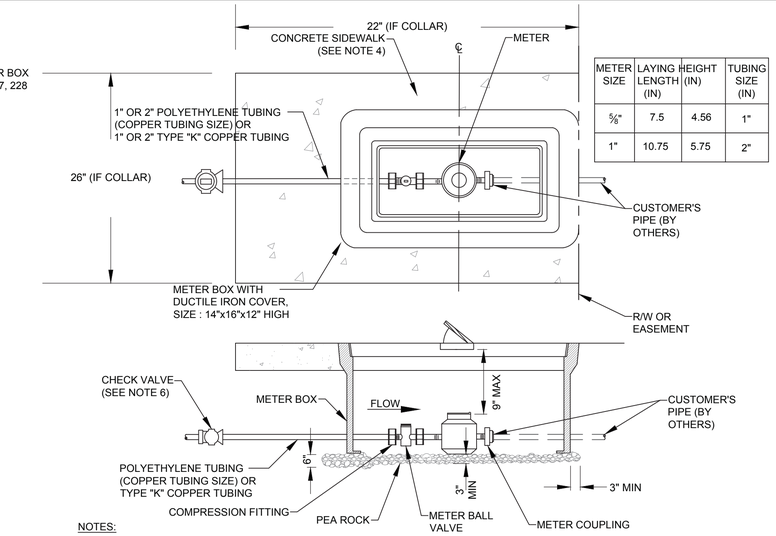

METER SIZE	LAYING LENGTH (IN)	HEIGHT (IN)	TUBING SIZE (IN)
⅝"	7.5	4.56	1"
1"	10.75	5.75	2"

NOTES:

1. ALL STRUCTURES TO BE TRAFFIC BEARING TYPE.
2. WWS RESPONSIBILITY ENDS AT THE CUSTOMER'S SIDE OF METER COUPLING.
3. CURVE IN SERVICE LINE SHALL BE AS CLOSE TO METER BOX AS PRACTICAL, WITH A MINIMUM RADIUS OF BE 14" FOR 1" TUBING AND 21" FOR 2" TUBING.
4. ALL METERS WILL BE SUPPLIED AND INSTALLED BY WWS. METER HAS IRON PIPE THREAD MALE CONNECTION ON EACH END.
5. WHEN SIDEWALKS ARE PRESENT, OR PLANNED FOR IN THE R/W, THE BACK EDGE OF THE METER BOX SHALL LINE UP WITH THE BACK EDGE OF THE SIDEWALK.
6. METER SHALL BE CENTERED IN BOX DIRECTLY UNDER THE ACCESS LID.
7. THE CHECK VALVE IS TO BE INSTALLED 5 FEET BEFORE THE METER BALL VALVE.
8. WHEN THERE ARE NO SIDEWALKS, CONSTRUCT 6" WIDE x 6" THICK CONCRETE COLLAR AT GRADE.

WATER METER INSTALLATION FOR FOR ⅝" AND 1" METER

BCWWS DETAIL 226 (N.T.S.)

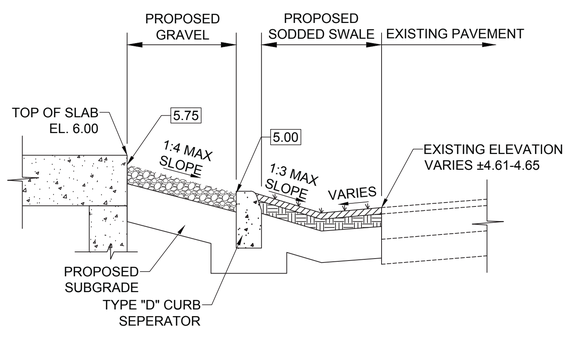

SECTION G-G

TYPICAL CONDITION ADJACENT TO GRAVEL (N.T.S.)

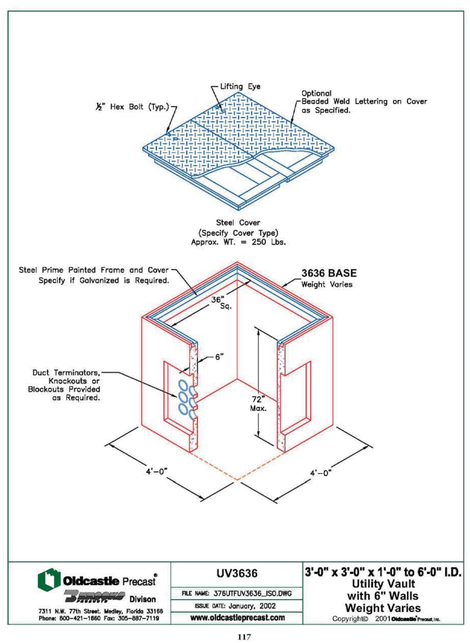

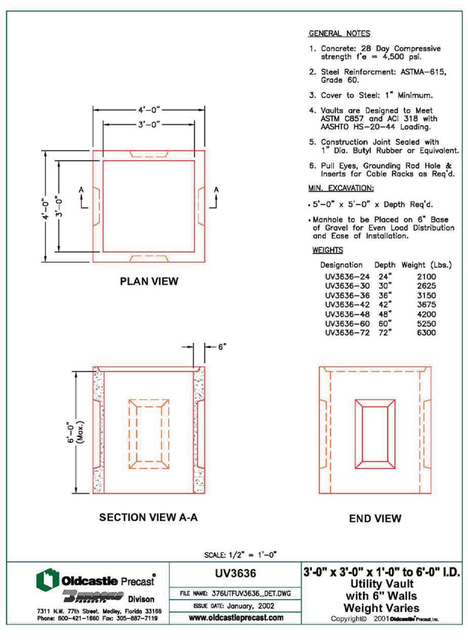

DATE:	07-03-2019
SCALE:	AS SHOWN
DESIGN BY:	PJG
DRAWN BY:	DLC
CHECKED BY:	PJG
APPROVED BY:	PJG

DATE:	BY:	DESCRIPTION:

CRAVEN • THOMPSON AND ASSOCIATES, INC.
ENGINEERS • PLANNERS • SURVEYORS
3563 N.W. 53RD STREET, FORT LAUDERDALE, FLORIDA 33309
FAX: (954) 739-6409 TEL.: (954) 739-6400
FLORIDA LICENSED ENGINEERING, SURVEYING & MAPPING BUSINESS No. 271
FLORIDA LICENSED LANDSCAPE ARCHITECTURE BUSINESS No. C000114

MATERIAL SHOWN HEREON IS THE PROPERTY OF CRAVEN THOMPSON & ASSOCIATES, INC. AND SHALL NOT BE REPRODUCED IN WHOLE OR IN PART WITHOUT PERMISSION OF CRAVEN THOMPSON & ASSOCIATES, INC.
CRAVEN THOMPSON AND ASSOCIATES, INC. COPYRIGHT © 2000

PUMP STATION NO. 8
REPLACEMENT

PREPARED FOR:
CITY OF HALLANDALE BEACH

PUMP STATION DETAILS

Patrick J. Gibney, State of Florida, Professional Engineer, License No. 49428

This item has been digitally signed and sealed by Patrick J. Gibney, PE. on the date adjacent to the seal.

Printed copies of this document are not considered signed and sealed and the signature must be verified on any electronic copies.

Patrick J. Gibney
Florida P.E. No. 49428

PROJECT NO.
17-0039-001-02

D-7

SHEET 11 OF 28

R:\Engineering\2017\17-0039-001-02 Hallandale PS 08\Drawings\17-0039-001-02-D-7.dwg [D-7] Aug 17, 2019 12:24am DCHIN

DRAWING NO. 32597R-CD-HALLANDALE

ZONE	REV	REVISION HISTORY DESCRIPTION	REVISED	CKD	CHKD	IN	DWN	CHK
ALL	NR1	INITIAL RELEASE						

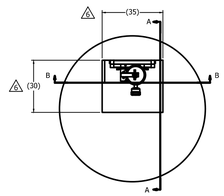

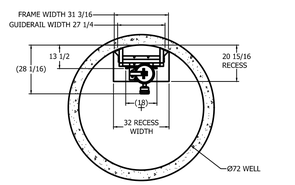

SECTION C-C

NOTES: UNLESS OTHERWISE SPECIFIED
1. Ø1/2" ANCHOR BOLTS ARE PROVIDED BY OTHERS.
2. CONTRACTOR SHALL GROUT OR SEAL GAPS BETWEEN FRAME AND WALL TO PREVENT ANY LARGE PARTICLES FROM PASSING.
3. SEE DRAWING 30005-CD FOR GRINDER DIMENSIONS AND DETAILS.
4. **ALL DIMENSIONS NEED TO BE CONFIRMED TO ENSURE PROPER FIT.**
5. APPROXIMATE WEIGHTS:
   FRAME: 175 LBS.
   GUIDERAIL: 237 LBS.
   GRINDER WITH LIFTING BAIL: 589 LBS.

△5 MINIMUM HATCH DIMENSIONS ARE SHOWN.

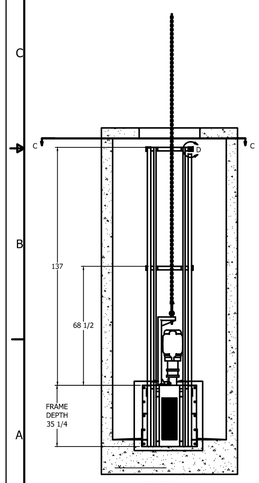

SECTION B-B

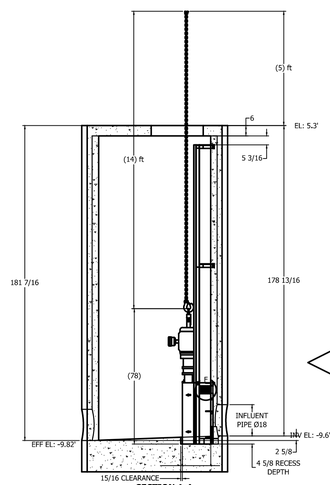

SECTION A-A

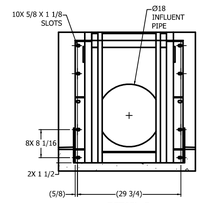

DETAIL E

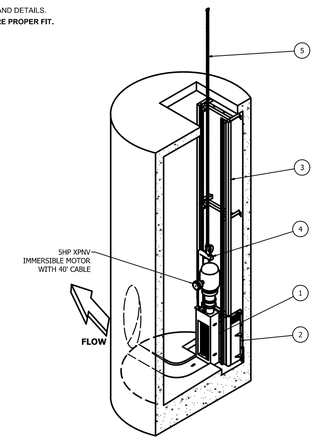

FLOW

ITEM	QTY	PART / ASSEMBLY NUMBER	DESCRIPTION	MATERIAL
5	1	A311115-0168-06-SU	HAUL CHAIN, 14FT LONG	316 SST
4	1	A351064-SU	LIFTING BAIL-POST	316 SST
3	1	325978-0137-072-SS	GUIDE RAIL - ROUND WALL MOUNTED	304 SST
2	1	325378-HALLANDALE	FRAME - ROUND WALL MOUNTED	304 SST
1	1	30005-0024-01	MUFFIN MONSTER GRINDER	DUCTILE IRON

PARTS LIST

THIS DRAWING AND DATA ARE FULLY PROTECTED BY COPYRIGHT OWNED BY JWC ENVIRONMENTAL. THIS DRAWING AND DATA EMBODY PROPRIETARY INFORMATION WHICH IS THE CORPORATE PROPERTY OF JWC ENVIRONMENTAL. THIS DATA MAY NOT BE COPIED, REPRODUCED, DISCLOSED, TRANSFERRED OR USED IN WHOLE OR IN PART FOR ANY PURPOSE WITHOUT THE EXPRESS WRITTEN PERMISSION FROM JWCE. THIS DRAWING IS LOANED IN CONFIDENCE WITH THE UNDERSTANDING THAT IT SHALL BE RETURNED UPON DEMAND.

UNLESS OTHERWISE SPECIFIED DIMENSIONS ARE IN INCHES [MM]
FRACTIONS ± 1/16 | DECIMALS .XX ±.05 .XXX ±.030 | ANGLES ± 1/2°
MATERIAL AS NOTED
FINISH
DO NOT SCALE DRAWING

CONTRACT NO.
APPROVALS | DATE
DRAWN H. LOO 9-30-19
CHECKED
ENGR.
QA
MFG.

JWC ENVIRONMENTAL
290 PALAUNG AVE, COSTA MESA, CA 92626

MUFFIN MONSTER INSTALLATION
HALLANDALE FL PS
PS#8

SIZE D | DRAWING NO. 32597R-CD-HALLANDALE | REV NR1
SCALE: NONE | SHEET 1 OF 2

ALL RIGHTS RESERVED.

DRAWING NO. 32597R-CD-HALLANDALE

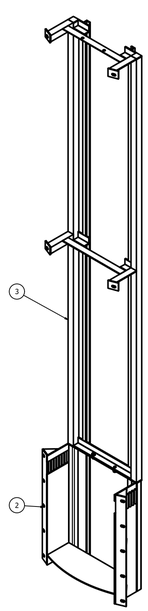

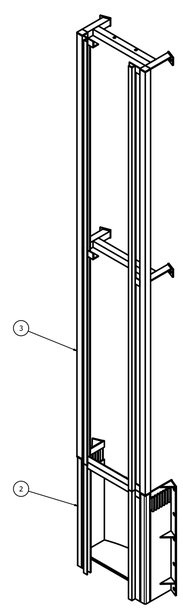

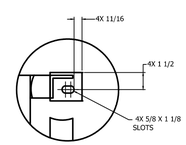

DETAIL D

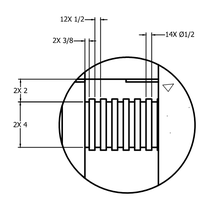

DETAIL F

JWC ENVIRONMENTAL
290 PALAUNG AVE, COSTA MESA, CA 92626

MUFFIN MONSTER INSTALLATION
HALLANDALE FL PS
PS#8

SIZE D | DRAWING NO. 32597R-CD-HALLANDALE | REV NR1
SCALE: NONE | SHEET 2 OF 2

ALL RIGHTS RESERVED

R:\Engineering\2017\17-0039-001-02 Hallandale PS #8\Drawings\17-0039-001-02-D-8.dwg [D-8] Sep 03, 2019 11:06am DCHIN

DATE:	07-03-2019
SCALE:	AS SHOWN
DESIGN BY:	PJG
DRAWN BY:	DLC
CHECKED BY:	PJG
APPROVED BY:	PJG

BY:	DATE:	DESCRIPTION:

CRAVEN • THOMPSON AND ASSOCIATES, INC.
ENGINEERS • PLANNERS • SURVEYORS
3563 N.W. 53RD STREET, FORT LAUDERDALE, FLORIDA 33309
FAX: (954) 739-6409 TEL.: (954) 739-6400
FLORIDA LICENSED ENGINEERING, SURVEYING & MAPPING BUSINESS No. 271
FLORIDA LICENSED LANDSCAPE ARCHITECTURE BUSINESS No. C000114

MATERIAL SHOWN HEREON IS THE PROPERTY OF CRAVEN THOMPSON & ASSOCIATES, INC. AND SHALL NOT BE REPRODUCED IN WHOLE OR IN PART WITHOUT THE PERMISSION OF CRAVEN THOMPSON & ASSOCIATES, INC.
CRAVEN THOMPSON & ASSOCIATES, INC. COPYRIGHT © 2019

PUMP STATION NO. 8 REPLACEMENT

PREPARED FOR:
CITY OF HALLANDALE BEACH

PUMP STATION DETAILS

Patrick J. Gibney, State of Florida, Professional Engineer, License No. 49428

This item has been digitally signed and sealed by Patrick J. Gibney, PE. on the date adjacent to the seal.

Printed copies of this document are not considered signed and sealed and the signature must be verified on any electronic copies.

Patrick J. Gibney
Florida P.E. No. 49428

PROJECT NO.
17-0039-001-02

D-8

SHEET 12 OF 28

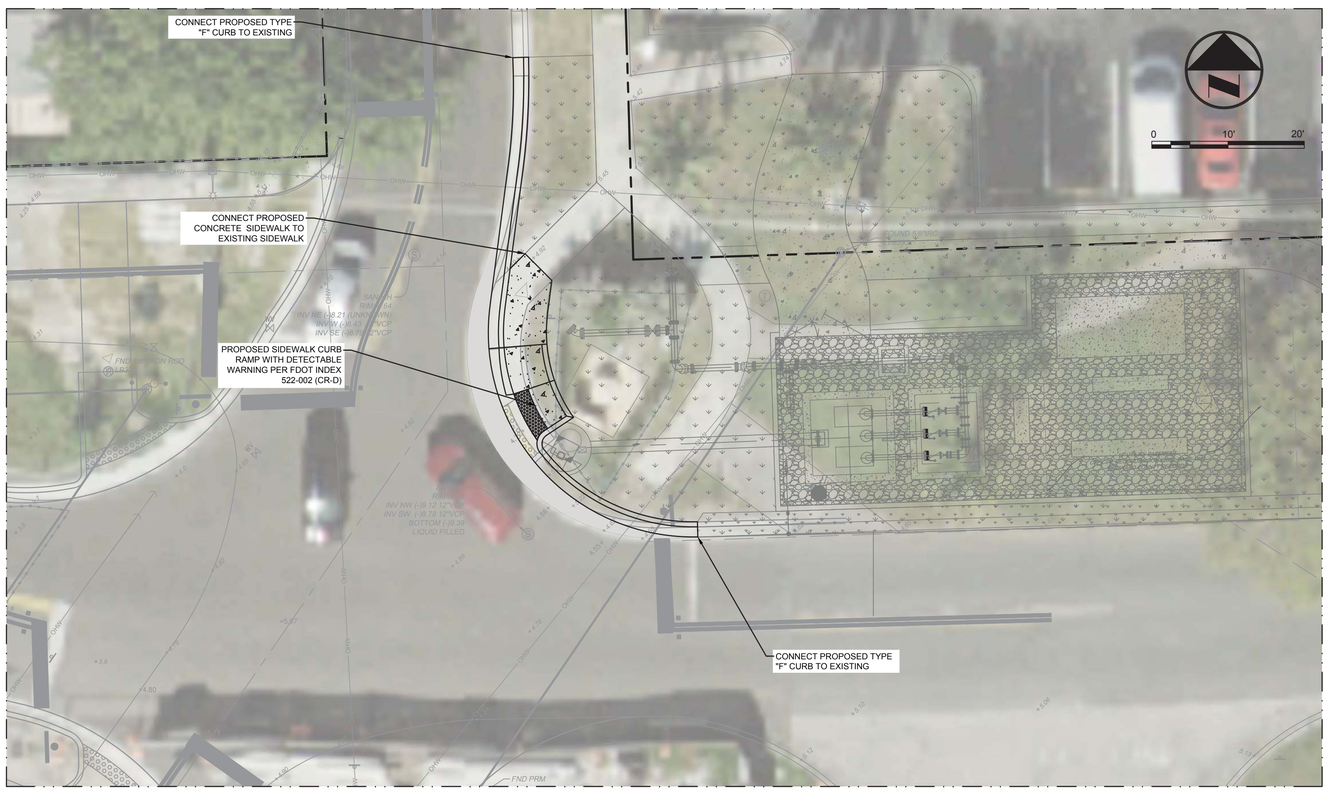

DETAIL "A"

PROPOSED DRAINAGE LEGEND:

1" MILL AND OVERLAY W/SP-9.5 EXISTING PAVEMENT

SAWCUT PAVEMENT LINE

NOTES:

1. LOCATIONS OF ALL EXISTING UTILITIES ARE APPROXIMATE AND SHOULD BE FIELD VERIFIED PRIOR TO CONSTRUCTION.
2. CONTRACTOR TO ADJUST ALL EXISTING RIM/GRATES OF EXISTING UTILITY APPURTENANCES TO REMAIN TO MATCH PROPOSED GRADES.
3. THE CROSS SLOPE ON A.D.A. ACCESSIBLE ROUTES SHALL NOT EXCEED 2.0%, THE LONGITUDINAL SLOPE ON A.D.A. ACCESSIBLE ROUTES (NOT INCLUDING RAMPS) SHALL NOT EXCEED 5.0%. THE LONGITUDINAL SLOPE FOR CURB RAMPS SHALL NOT EXCEED 12:1 (8.33%).
4. VERTICAL INFORMATION HEREON IS RELATIVE TO THE NORTH AMERICAN VERTICAL DATUM (NAVD88).
5. CONTRACTOR SHALL REPLACE ALL PAVEMENT MARKING DUE TO CONSTRUCTION OPERATIONS AND MILLING & RESURFACING.
7. ALL EXISTING SIDEWALKS AND MEDIANS ARE TO BE PRESSURE WASHED UPON THE COMPLETION OF THE PROJECT.

VERTICAL INFORMATION HEREON IS RELATIVE TO THE NORTH AMERICAN VERTICAL DATUM (NAVD88).

DATE:	07-03-2019	
SCALE:	AS SHOWN	
DESIGN BY:	PJG	
DRAWN BY:	DLC	
CHECKED BY:	PJG	
APPROVED BY:	PJG	
DATE:		
BY:		
DESCRIPTION:		

CRAVEN • THOMPSON AND ASSOCIATES, INC.
ENGINEERS • PLANNERS • SURVEYORS
3563 N.W. 53RD STREET, FORT LAUDERDALE, FLORIDA 33309
FAX: (954) 739-6409 TEL.: (954) 739-6400
FLORIDA LICENSED ENGINEERING, SURVEYING & MAPPING BUSINESS No. 271
FLORIDA LICENSED LANDSCAPE ARCHITECTURE BUSINESS No. C000114

MATERIAL SHOWN HEREON IS THE PROPERTY OF CRAVEN THOMPSON & ASSOCIATES, INC. AND SHALL NOT BE REPRODUCED IN WHOLE OR IN PART WITHOUT PERMISSION OF CRAVEN THOMPSON & ASSOCIATES, INC.
CRAVEN THOMPSON & ASSOCIATES, INC. COPYRIGHT © 2019

PUMP STATION NO. 8 REPLACEMENT

PREPARED FOR:
CITY OF HALLANDALE BEACH

OFF-SITE IMPROVEMENTS

Patrick J. Gibney, State of Florida, Professional Engineer, License No. 49428

This item has been digitally signed and sealed by Patrick J. Gibney, PE. on the date adjacent to the seal.

Printed copies of this document are not considered signed and sealed and the signature must be verified on any electronic copies.

Patrick J. Gibney
Florida P.E. No. 49428

PROJECT NO.
17-0039-001-02

OS

SHEET 13 OF 28

R:\Engineering\2017\17-0039-001-02 Hallandale PS 08\Drawings\17-0039-001-02 OS.dwg [OS] Aug 17, 2019 12:38pm DCHIN

ELECTRICAL GENERAL NOTES

1. THE SCOPE OF WORK SHALL CONSIST PRIMARILY OF THE FOLLOWING:

   A. NEW LIFT STATION ELECTRICAL EQUIPMENT INSTALLATION AS SHOWN ON DRAWINGS FOR A COMPLETE WORKING SYSTEM IN PLACE.

2. THE CONTRACTOR SHALL PROVIDE ALL MATERIALS AND LABOR TO INSTALL THE ELECTRICAL SYSTEMS AS INDICATED ON THE DRAWINGS. ITEMS NOT SHOWN BUT OBVIOUSLY NECESSARY FOR COMPLETION OF THE WORK SHALL BE INCLUDED.

3. THE INSTALLATION SHALL BE IN ACCORDANCE WITH THE NATIONAL ELECTRICAL CODE, NATIONAL ELECTRICAL SAFETY CODE, LOCAL CODES AND FLORIDA BUILDING CODE.

4. THE CONTRACTOR SHALL OBTAIN ALL NECESSARY PERMITS, INSPECTIONS AND APPROVALS AND INCLUDE ALL FEES AS PART OF THEIR BID IF NOT OTHERWISE NOTED.

5. THE CONTRACTOR SHALL COORDINATE THEIR WORK WITH THE CONSULTANT AND CITY OF HALLANDALE.

6. THE CONTRACTOR SHALL, BEFORE SUBMITTING THEIR BID, VISIT THE SITE OF THE PROJECT AND BECOME FAMILIAR WITH THE EXISTING CONDITIONS. NO ALLOWANCE WILL BE MADE FOR EXISTING CONDITIONS OR FAILURE OF THE CONTRACTOR TO OBSERVE THEM.

7. CONTRACTOR SHALL NOTIFY OWNER 72 HOURS IN ADVANCE OF ANY WORK THAT REQUIRES A POWER SHUTDOWN, IN ORDER TO GET THE AUTHORIZATION TO COMMENCE THE WORK. CONTRACTOR SHALL PROVIDE A WORKING SCHEDULE IN WRITING TO OWNER SHOWING THE PROPOSED SCHEDULE OF WORK WITH THE ANTICIPATED TIME DURATIONS.

8. IT IS THE CONTRACTOR'S RESPONSIBILITY TO COORDINATE WITH ALL LOCAL UTILITIES, INCLUDING THE POWER AND TELEPHONE UTILITIES TO MEET ALL OF THEIR INSTALLATION REQUIREMENTS. ALL LABOR, EQUIPMENT OR MATERIALS NECESSARY TO MEET THESE REQUIREMENTS ARE TO BE INCLUDED IN THE BID. THE CONTRACTOR SHALL OBTAIN, DELIVER AND INSTALL ALL CONDUITS, PULL-BOXES AND EQUIPMENT AS REQUIRED BY THE UTILITIES TO MEET THEIR SPECIFICATIONS.

9. ALL EQUIPMENT AND MATERIAL SHALL BE UNUSED AND U.L. LISTED. ALL REFERENCES TO A PARTICULAR MANUFACTURER ARE GIVEN ON AN "APPROVED ALTERNATE" BASIS.

10. THE CONTRACTOR IS RESPONSIBLE TO TEST ALL SYSTEMS INSTALLED OR MODIFIED UNDER THIS PROJECT AND REPAIR OR REPLACE ALL DEFECTIVE WORK TO THE SATISFACTION OF THE CONSULTANT AND CITY OF HALLANDALE.

11. ALL EQUIPMENT FURNISHED AND INSTALLED BY THE CONTRACTOR UNLESS OTHERWISE NOTED IN THE SPECIFICATIONS SHALL BE GUARANTEED AGAINST DEFECTS IN MATERIAL AND WORK PRODUCT FOR A PERIOD OF ONE YEAR FROM DATE OF SUBSTANTIAL COMPLETION.

12. ALL CONDUCTORS SHALL BE COPPER. NO ALUMINUM ALLOWED UNLESS SPECIFICALLY INDICATED ON DRAWINGS. SEE SPECIFICATIONS FOR ADDITIONAL INFORMATION ON CONDUCTORS.

13. SHOP DRAWINGS SHALL BE SUBMITTED FOR ALL ELECTRICAL AND SPECIAL SYSTEMS EQUIPMENT AND MATERIAL.

14. ALL CONTROL PANELS SHALL BE CONSTRUCTED UNDER UL 508A STANDARD, BY THE APPROVED PANEL VENDOR AND THE VENDOR SHALL BEAR A UL 508A LABEL ON THE PANEL.

15. ELECTRICAL AND COMMUNICATION REPRESENTATIVES ARE AS FOLLOWS:
    FPL REPRESENTATIVE - LENIN VARGAD - 954-442-6362

16. THE DRAWINGS ARE NOT INTENDED TO SHOW THE EXACT LOCATION OF CONDUIT RUNS. THESE ARE TO BE COORDINATED WITH THE OTHER TRADES SO THAT CONFLICTS ARE AVOIDED PRIOR TO INSTALLATIONS.

17. ALL LOCATIONS OF EQUIPMENT, PANELS ETC. ARE SHOWN FOR ILLUSTRATION PURPOSES. CONTRACTOR SHALL VERIFY AND COORDINATE EXACT LOCATION AND SIZE WITH ALL SUBCONTRACTORS AND EQUIPMENT SUPPLIERS PRIOR TO ANY INSTALLATION AND THEN INSTALL AS SUCH WITH CORRESPONDING CONDUIT STUB-UPS.

18. SEE OTHER DISCIPLINE DRAWINGS FOR COORDINATION OF ALL DRAWINGS. ANY CONFLICTS SHALL BE BROUGHT TO THE CONSULTANT'S ATTENTION AND MOVEMENT OF CONDUITS OR OTHER ELECTRICAL EQUIPMENT SHALL BE ACCOMPLISHED WITHOUT ANY ADDITIONAL COST FOR THE CITY OF HALLANDALE.

19. LOCATIONS OF HANDHOLES AND PULL BOXES ARE APPROXIMATE. CONTRACTOR SHALL COORDINATE EXACT LOCATION WITH EXISTING AND NEW PIPING OR CONDUIT AND ADJUST ACCORDINGLY.

20. NOT ALL CONDUITS SHOWN ON RISER AND ONE-LINE DIAGRAMS ARE SHOWN ON BUILDING LAYOUTS. CONTRACTOR SHALL SUPPLY ALL CONDUITS AND CABLES AS SHOWN ON RISER AND ONE-LINE DIAGRAMS.

21. ALL CIRCUITS SHALL BE IDENTIFIED IN JUNCTION BOXES, PULL BOXES, CONTROL PANELS, PANELBOARDS, LIGHTING POLES, CONTROLLERS AND SERVICE POINTS. IDENTIFICATION SHALL MATCH PANELBOARD SCHEDULES.

22. CONDUCTOR PULLING TENSIONS SHALL NOT EXCEED MANUFACTURER'S RECOMMENDATION. CONTRACTOR SHALL INSTALL PULL BOXES TO MEET MANUFACTURER'S REQUIREMENTS.

23. THE CONTRACTOR SHALL BE RESPONSIBLE FOR ALL CONDUIT AND WIRING INSTALLATION FOR ALL VENDOR PROVIDED EQUIPMENT (PACKAGE SYSTEMS). IF THE SHOP DRAWINGS DIFFER FROM THE DESIGNED FACILITIES, THE CONTRACTOR SHALL REDESIGN THE FACILITIES AND SUBMIT THE REVISED DESIGN FOR THE CONSULTANT'S APPROVAL ALONG WITH THE SHOP DRAWINGS. THERE SHALL BE NO ADDITIONAL COST TO THE OWNER FOR THE REDESIGN NOR FOR ANY ADDITIONAL CONDUITS AND WIRING. DURING SUBMITTAL THE CONTRACTOR SHALL VERIFY ALL SUPPLIED BREAKER SIZES FOR ALL PACKAGED SYSTEMS AND MODIFY ALL BREAKERS IN PANELBOARDS ACCORDINGLY WITHOUT ANY ADDITIONAL COST TO THE CITY OF HALLANDALE.

24. GROUNDING SHALL BE INSTALLED IN ACCORDANCE WITH NEC, ARTICLE 250. THE GROUNDING SYSTEM TEST SHALL NOT EXCEED A 48 HOUR SPAN DRY RESISTANCE OF 10 OHMS. ADDITIONAL GROUNDING TO MEET THIS REQUIREMENT SHALL BE INSTALLED AT NO EXTRA COST. GROUNDING AND BONDING CONNECTIONS SHALL NOT BE PAINTED. ALL GROUNDING CONNECTIONS SHALL BE EXOTHERMIC UNLESS SPECIFICALLY INDICATED OTHERWISE.

25. AN EQUIPMENT GROUND WIRE SIZED PER NEC SHALL BE PULLED IN ALL ELECTRICAL CONDUITS, POWER AND CONTROL, WHETHER OR NOT INDICATED ON THE PLANS.

26. ALL ENCLOSURES, TJB, WIREWAY, PULL BOXES ETC. SHALL CONTAIN A GROUNDING BUS. CONNECT ALL RACEWAY BONDS TO THIS BUS VIA GROUNDING BUSHING AND EXTEND BONDING JUMPER FROM THIS BUS TO THE ENCLOSURE.

27. PROVIDE CONDUIT DUCT SEAL AT ALL CONDUIT ENDS.

28. ALL SPARE CONDUITS SHALL BE SEALED WITH A CAP AT BOTH ENDS AND A PULL STRING INSTALLED WITH IDENTIFICATION ON BOTH ENDS.

29. TYPEWRITTEN PANEL SCHEDULES SHALL BE INSTALLED IN EACH PANELBOARD, AND TYPEWRITTEN TERMINAL BLOCK SCHEDULES IN EACH CONTROL CABINET.

30. CONTRACTOR SHALL BALANCE PANELBOARD LOADS AT THE END OF THE PROJECT.

31. ALL EXPOSED CONDUITS SHALL BE RIGID ALUMINUM. ALL UNDERGROUND CONDUITS SHALL BE PVC SCHEDULE 40(FOR FPL) OR RIGID ALUMINUM(FOR LIFT STATION).

32. COMBINING OF NEUTRAL CONDUCTORS SHALL NOT BE ALLOWED.

33. THE CONTRACTOR MAY COMBINE CONDUCTORS TO LIMIT THE NUMBER OF CONDUITS LEAVING THE PANELBOARD. CONTRACTOR SHALL DERATE THE WIRES AS PER NEC AND INCREASE THE SIZE OF THE WIRES ACCORDINGLY.

34. BRANCH AND FEEDER CONDUCTORS ARE SIZED FOR MAXIMUM VOLTAGE DROP OF 5 PERCENT COMBINED AT DESIGN LOAD PER THE 2017 FLORIDA BUILDING CODE -ENERGY CONSERVATION-C405.6.3.

35. THE OWNER SHALL HAVE THE RIGHT TO SALVAGE MATERIALS THAT ARE TO BE REMOVED IN THE DEMOLITION PLANS. THE CONTRACTOR SHALL COORDINATE WITH THE OWNER PRIOR TO DEMOLITION AND DELIVER SALVAGE MATERIAL TO THE OWNER/MAINTENANCE GROUP.

36. FOR CABLE COLOR CODE PLEASE REFER TO SPECIFICATION 16120.

37. CONTRACTOR SHALL PROVIDE TO THE OWNER WITHIN 30 DAYS AFTER THE DATE OF SYSTEM ACCEPTANCE RECORD DRAWINGS DEPICTING THE COMPLETED INSTALLATION AS INSTALLED INCLUDING A SINGLE LINE DIAGRAM OF THE BUILDING ELECTRICAL DISTRIBUTION AND FLOOR PLANS INDICATING THE LOCATION AND AREA SERVED BY ALL INSTALLED DISTRIBUTIONS PER THE 2017 FLORIDA BUILDING CODE-ENERGY

38. CONSERVATION-C405.6.4.1.
    CONTRACTOR SHALL PROVIDE TO THE OWNER OPERATING AND MAINTENANCE MANUALS (O&M MANUALS) FOR ALL EQUIPMENT PER THE 2017 FLORIDA BUILDING CODE, DIVISION C405.6.4.2. THE MANUALS SHALL INCLUDE:
    1. SUBMITTAL DATA STATING EQUIPMENT RATING AND SELECTED OPTIONS FOR EACH PIECE OF EQUIPMENT REQUIRING MAINTENANCE.
    2. O&M MANUALS FOR EACH PIECE OF EQUIPMENT REQUIRING MAINTENANCE. REQUIRED ROUTINE MAINTENANCE ACTIONS SHALL BE CLEARLY IDENTIFIED.
    3. NAMES AND ADDRESSES OF AT LEAST ONE QUALIFIED SERVICE AGENCY

39. ALL REFERENCES TO SS OR STAINLESS STEEL SHALL MEAN 316 STAINLESS STEEL.

40. ALL ELECTRICAL EQUIPMENT SHALL BE PERMANENTLY IDENTIFIED AND SIGNED PER THE REQUIREMENTS OF THE NEC AND THE FLORIDA BUILDING CODE.

41. MINIMUM DISTANCE ALLOWED BETWEEN POWER CONDUITS AND INSTRUMENTATION/COMMUNICATION CONDUITS SHALL BE:

VOLTAGE	DISTANCE
480V	2 FT
120V	1 FT

42. THE CONTRACTOR SHALL FURNISH AN ARC FLASH HAZARD ANALYSIS STUDY PER 2018 NFPA 70E - STANDARD FOR ELECTRICAL SAFETY IN THE WORKPLACE, REFERENCE ARTICLE 130.5 (C)(1) AND ANNEX D, SEE SPECIFICATION 16015.

43. CONTRACTOR SHALL PROVIDE AND INSTALL FIELD INSTALLED LABEL ON SERVICE EQUIPMENT WITH MAXIMUM AVAILABLE FAULT CURRENT. THE FIELD MARKING SHALL INCLUDE THE DATE THE FAULT CURRENT CALCULATION WAS PERFORMED AND BE OF SUFFICIENT DURABILITY TO WITHSTAND THE ENVIRONMENT INSTALLED PER NEC ARTICLE 110.24A AND 110.24B.

AMY L. CHAMPAGNE-BAKER, STATE OF FLORIDA, PROFESSIONAL ENGINEER, LICENSE NO. 73735 THIS ITEM HAS BEEN ELECTRONICALLY SIGNED AND SEALED BY **AMY L. CHAMPAGNE-BAKER, P.E.** ON **THE DATE INDICATED HERE** USING A **SHA AUTHENTICATION CODE**. PRINTED COPIES OF THIS DOCUMENT ARE NOT CONSIDERED SIGNED AND SEALED AND THE **SHA AUTHENTICATION CODE** MUST BE VERIFIED ON ANY ELECTRONIC COPIES.

HILLERS ELECTRICAL ENGINEERING, INC.
23257 STATE ROAD 7, SUITE 100
BOCA RATON, FLORIDA 33428
(561) 451-9165
(561) 451-4886 FAX
LICENSE NO: EB 0006877

DATE:	7/3/19
SCALE:	NONE
DESIGN BY:	ALC
DRAWN BY:	DEU
CHECKED BY:	JWK
APPROVED BY:	ALC

BY:	DATE:	DESCRIPTION:

CRAVEN • THOMPSON AND ASSOCIATES, INC.
ENGINEERS • PLANNERS • SURVEYORS
3563 N.W. 53RD STREET, FORT LAUDERDALE, FLORIDA 33309
FAX: (954) 739-6409 TEL.: (954) 739-6400
FLORIDA LICENSED ENGINEERING, SURVEYING & MAPPING BUSINESS No. 271
FLORIDA LICENSED LANDSCAPE ARCHITECTURE BUSINESS No. C000114

MATERIAL SHOWN HEREON IS THE PROPERTY OF CRAVEN THOMPSON & ASSOCIATES, INC. AND SHALL NOT BE REPRODUCED IN WHOLE OR IN PART WITHOUT PERMISSION OF CRAVEN THOMPSON & ASSOCIATES, INC. CRAVEN THOMPSON & ASSOCIATES, INC. COPYRIGHT © 2019

PUMP STATION NO. 8
REPLACEMENT

PREPARED FOR:
CITY OF HALLANDALE BEACH

ELECTRICAL GENERAL NOTES

Amy L. Champagne-Baker,PE
Digitally signed by Amy L. Champagne-Baker,PE
Reason: This item has been digitally signed and sealed
Date: 2019.08.06 15:58:01 -04'00'

Amy L. Champagne-Baker
Florida P.E. No. 73735

PROJECT NO.
17-0039-001-02

E-1

SHEET 14 OF 28

C:\Users\duruijo\AppData\Local\Temp\AcPublish_10076\17-0039-001-01-E01.dwg [E-1] Jul 03, 2019 4:06pm DURUIJO

ELECTRICAL PLAN/LAYOUT

SYMBOL	DESCRIPTION
	ELECTRICAL EQUIPMENT
	LUMINAIRE AND POLE - SEE SCHEDULE FOR TYPE
	SCHEDULE 40 PVC DIRECT BURIED CONDUIT, HAND EXCAVATED NOTE: ALL UNMARKED CONDUIT RUNS CONSIST OF 2#10, 1#10G IN 3/4"C.
	CONCRETE ENCASED CONDUIT, INSTALL UNDER EXISTING PAVEMENT, 36" DEEP
UGE	DIRECT BURIED UNDERGROUND FPL CONDUIT(S), 36" DEEP
OHE	OVERHEAD FPL POWER
TEL/TV	DIRECT BURIED UNDERGROUND ATT AND COMCAST 6-4" CONDUIT(S) 36" DEEP
P	DIRECT BURIED POWER DUCTBANK
COM	DIRECT BURIED COMMUNICATION DUCTBANK
	CONDUIT, STUBBED AND CAPPED AS SHOWN, MIN OF 36" DEEP WITH CONCRETE MONUMENT
G	GROUND WIRE, 4/0 BTC UNLESS OTHERWISE NOTED, 30" DEEP IN EARTH/EXISTING PAVEMENT
	GROUND ROD - 3/4" x 20' COPPER CLAD UNLESS OTHERWISE NOTED: TW- TESTWELL
S a	WALL SWITCH: 2- DOUBLE POLE; 3- THREE WAY; 4- FOUR WAY; WP- WEATHERPROOF; P- PILOT LIGHT; K- KEY OPERATED; D- DIMMER; CRE- CORROSION RESISTANT. a-LOWERCASE LETTER DESIGNATES SWITCH ID
	CONVENIENCE RECEPTACLE - 20A DUPLEX UNLESS SPECIFIED OTHERWISE. WP- WEATHERPROOF; TL- TWIST LOCK; GFI-GROUND FAULT INTERRUPTER; C- CLOCK HANGER; CRE- CORROSION RESISTANT
	CONVENIENCE RECEPTACLE - 20A QUADROPLEX UNLESS SPECIFIED OTHERWISE
	CONVENIENCE RECEPTACLE - 20A DUPLEX UNLESS SPECIFIED OTHERWISE. LOCATED ABOVE COUNTER TOP GFI-GROUND FAULT INTERRUPTER
30	RECEPTACLE, SPECIAL PURPOSE - AMPERAGE AS INDICATED.
J	JUNCTION BOX NEMA 12 ENCLOSURE UNLESS INDICATED OTHERWISE. 4X = NEMA 4X 316 SS
E	POWER PULL BOX
C	COMMUNICATION PULL BOX
F	FPL HANDHOLE

ABBREVIATIONS

ABBREVIATIONS	DESCRIPTION
A	AMMETER, AMPERE
AC	ALTERNATING CURRENT
AF	AMPERE FRAME
AFD	ADJUSTABLE FREQUENCY DRIVE
AFF	ABOVE FINISHED FLOOR
AFG	ABOVE FINISHED GRADE
AS	AMMETER SWITCH, AMPERE SENSOR
ASU	AIR SUPPLY UNIT
ATS	AUTOMATIC TRANSFER SWITCH
BC	BYPASS CONTACTOR
BRKR	BREAKER
BTC	BARE TINED COPPER
C	CONDUIT, CONTACTOR
CB	CIRCUIT BREAKER
CKT	CIRCUIT
CMS	COMBINATION MOTOR STARTER
CPT	CONTROL POWER TRANSFORMER
CR	CONTROL RELAY
CRE	CORROSION RESISTANT
CT	CURRENT TRANSFORMER
DC	DIRECT CURRENT
DIV	DIVISION
DP	DISTRIBUTION PANEL (480V)
ECB	EMERGENCY CIRCUIT BREAKER
EF	EXHAUST FAN
EG	ELECTRICAL GROUND
ETM	ELAPSED TIME METER
EXST	EXISTING
FDR	FEEDER
F, FU	FUSE
FI	FLOW INDICATOR
FLR	FLOOR
FLUOR	FLUORESCENT
FM	FLOW METER
FO	FIBER OPTIC
FS	FLOAT SWITCH, FLOW SWITCH
FT	FLOW TRANSMITTER
FUT	FUTURE
FVNR	FULL VOLTAGE NON-REVERSING STARTER
G	GREEN, GROUND
GEN	GENERATOR
GFI	GROUND FAULT INTERRUPTER
GFR	GROUND FAULT RELAY
GND	GROUND
HH	HANDHOLE
HID	HIGH INTENSITY DISCHARGE
HOA	HAND/OFF/AUTO
HOR	HAND/OFF/REMOTE
HPS	HIGH PRESSURE SODIUM
HVAC	HEATING, VENTILATING & AIR CONDITIONING
IC	INTERRUPTING CAPACITY
I & C	INSTRUMENTATION AND CONTROL
IMH	INSTRUMENTATION MANHOLE
INST	INSTANTANEOUS
IP	INSTRUMENT PANEL (PANELBOARD)
J, J-BOX	JUNCTION BOX
K	KEY INTERLOCK
KK	KIRK KEY INTERLOCK
LA	LIGHTNING ARRESTER
LC	LIGHTING CONTACTOR
LP	LIGHTING PANEL (PANELBOARD)
LR	LOCAL/REMOTE, LATCHING RELAY
LS	LIMIT SWITCH
LT FLEX	LIQUID TIGHT FLEX CONDUIT
LTG	LIGHTING
M	MAGNETIC CONTACTOR COIL OR MOTOR
MA	MILLIAMPS
LSIG	LONG TIME, SHORT TIME, INSTANTANEOUS, GROUND FAULT

ABBREVIATIONS	DESCRIPTION
MCB	MAIN CIRCUIT BREAKER
MCC	MOTOR CONTROL CENTER
MCC	MOTOR CIRCUIT PROTECTOR
MDP	MAIN DISTRIBUTION PANEL
MERC	MERCURY VAPOR
MH	MOTOR HEATER, CONCRETE PULLBOX
MLO	MAIN LUGS ONLY
MPZ	MINI POWER ZONE
MPR	MOTOR PROTECTION RELAY
MS	MOTOR STARTER
MSC	MANUFACTURER SUPPLIED CABLE
MT	MOUNT
MTD	MOTOR TEMPERATURE DETECTOR
N	NEUTRAL
NC	NORMALLY CLOSED
NEMA	NATIONAL ELECTRIC MANUFACTURER'S ASSOCIATION
NO	NORMALLY OPEN
NP	NAMEPLATE
NTS	NOT TO SCALE
OL	OVERLOAD RELAY
OLM	OPTICAL LINK MODULE
P	POLE
PB	PULL BOX
PC	PHOTOCELL
PH	PHASE
PM	PHASE MONITOR,POWER METER
PNL	PANEL
PP	POWER POLE
PR	PAIR
PS	PRESSURE SWITCH
PT	POTENTIAL TRANSFORMER
PVC	POLYVINYL CHLORIDE CONDUIT
RCPT	RECEPTACLE
RMS	ROOT MEAN SQUARE
RS	RIGID STEEL CONDUIT
RGS	RIGID GALVANIZED STEEL CONDUIT
RTU	REMOTE TELEMETRY UNIT
SC	SURGE CAPACITOR
SF	SUPPLY FAN
SH	SPACE HEATER
S/N	SOLID NEUTRAL
SPD	SURGE PROTECTIVE DEVICE
SSRVS	SOLID STATE REDUCED VOLTAGE STARTER
SS	STAINLESS STEEL
SV	SOLENOID VALVE
SW	SWITCH
SWBD	SWITCHBOARD
SWGR	SWITCHGEAR
SYM	SYMMETRICAL
T	THERMOSTAT
TB	TERMINAL BOARD
TDR	TIME DELAY RELAY
TJB	TERMINAL JUNCTION BOX
TS	THERMAL SWITCH
TSP	TWISTED SHIELDED PAIR
TYP	TYPICAL
UPS	UNINTERRUPTIBLE POWER SUPPLY
UVR	UNDER VOLTAGE RELAY
V	VOLTMETER, VOLT
VFD	VARIABLE FREQUENCY DRIVE
VS	VOLTMETER SWITCH
W	WATT
WHD	WATTHOUR DEMAND METER
WP	WEATHERPROOF
XFMR	TRANSFORMER

ONE LINE DIAGRAMS, RISER DIAGRAMS AND SCHEMATICS

SYMBOL	DESCRIPTION
5	MOTOR, SQUIRREL CAGE INDUCTION UNLESS OTHERWISE NOTED - HORSEPOWER INDICATED
	OVERLOAD RELAY HEATER
1	MAGNETIC STARTER WITH NEMA SIZE INDICATED
M	MOTOR CIRCUIT PROTECTOR, MAGNETIC, 3 POLE UNLESS INDICATED OTHERWISE.
400	CIRCUIT BREAKER, THERMAL MAGNETIC TRIP SHOWN, 3 POLE UNLESS INDICATED OTHERWISE.
400 225	FUSED SWITCH, SWITCH AND FUSE CURRENT RATING INDICATED, 3 POLE UNLESS INDICATED OTHERWISE.
100	SWITCH - CURRENT RATING INDICATED, 3 POLE UNLESS INDICATED OTHERWISE.
400/600	DRAWOUT CIRCUIT BREAKER, LOW VOLTAGE 600= FRAME RATING, 400=TRIP SETTING
400/600	DRAWOUT CIRCUIT BREAKER, MEDIUM VOLTAGE 600= FRAME RATING, 400=TRIP SETTING
600 400	DRAWOUT FUSED SWITCH, LOW OR MEDIUM VOLTAGE 600= FRAME RATING, 400=FUSE RATING
(3)	CURRENT TRANSFORMER, NUMBER OF WINDINGS INDICATED
480-120 /208V 15 KVA, 3Ø K-4 RATED	TRANSFORMER, VOLTAGES, PHASE AND RATING INDICATED AS APPLICABLE
	LIGHTNING ARRESTER
	CAPACITOR OR SURGE CAPACITOR
M	UTILITY METER
G	GENERATOR
X 0-600V	METER SCALE RANGE SHOWN IF REQUIRED. A - AMPS; V - VOLTS; PM - PHASE MONITOR; P - POWER METER
	FUSE
SPD	SURGE PROTECTIVE DEVICE
	GROUND
CPT 120V	CONTROL TRANSFORMER
GFR	GROUND FAULT RELAY WITH C.T.
	PUSH-BUTTON SWITCH, MOMENTARY CONTACT, NORMALLY OPEN
	PUSH-BUTTON SWITCH, MOMENTARY CONTACT, NORMALLY CLOSED
	PUSH BUTTON SWITCH, MAINTAINED CONTACTS WITH MECHANICAL INTERLOCK
	REMOTE DEVICE
A	INDICATING LIGHT - LETTER INDICATES COLOR. A - AMBER; B - BLUE; C - CLEAR; G - GREEN; R - RED; W - WHITE
A	PUSH TO TEST AND CONNECT INDICATING LIGHT SCHEMATIC DIAGRAMS ONLY. A - AMBER; B - BLUE; C - CLEAR; G - GREEN; R - RED; W - WHITE

SYMBOL	DESCRIPTION
S M	MANUAL MOTOR STARTER SWITCH, NEMA 1 UNLESS OTHERWISE NOTED. NUMBER OF POLES AS REQUIRED
PB 4X	PUSH-BUTTON STATION, NEMA 12 ENCLOSURE UNLESS INDICATED OTHERWISE. 4X = NEMA 4X 316 STAINLESS STEEL ENCLOSURE. SEE CONTROL DIAGRAMS FOR TYPE PUSH BUTTON REQUIRED
30 4X	NONFUSED DISCONNECT SWITCH, SIZE INDICATED, 3 POLE UNLESS INDICATED OTHERWISE, NEMA 12 ENCLOSURE, 4X = NEMA 4X 316 STAINLESS STEEL
F 40/60 4X	FUSED DISCONNECT SWITCH, SIZE INDICATED (60 = SWITCH RATING: 40 = FUSE RATING) 3 POLE UNLESS INDICATED OTHERWISE, NEMA 12 ENCLOSURE, 4X = NEMA 4X 316 STAINLESS STEEL
LC 30 4X	LIGHTING CONTACTOR, CURRENT RATING INDICATED, NEMA 12 ENCLOSURE UNLESS INDICATED OTHERWISE. SEE CONTROL DIAGRAM FOR NUMBER OF POLES. 4X = NEMA 4X 316 STAINLESS STEEL
2 4X	MAGNETIC STARTER, NEMA SIZE INDICATED, NEMA 12 ENCLOSURE, UNLESS INDICATED OTHERWISE. SEE CONTROL DIAGRAM. 4X = NEMA 4X 316 STAINLESS STEEL
2 4X	COMBINATION (FUSE OR CIRCUIT BREAKER AS INDICATED). MAGNETIC STARTER, NEMA SIZE INDICATED, NEMA 12 ENCLOSURE UNLESS INDICATED OTHERWISE. SEE CONTROL SCHEMATIC DIAGRAM. 4X = NEMA 4X 316 STAINLESS STEEL
CRX	CONTACT - NORMALLY OPEN WITH COIL INDICATED
CRX	CONTACT - NORMALLY CLOSED WITH COIL INDICATED
H O A XOO OOX	SELECTOR SWITCH: MAINTAINED CONTACT WITH CONTACT POSITION INDICATED, CHART IDENTIFIES OPERATION

CKT.	POSITION HAND	OFF	AUTO
1	X	O	O
2	O	O	X

X - CLOSED CONTACT
O - OPEN CONTACT

GENERAL

SYMBOL	DESCRIPTION
	CONNECTION POINT TO EQUIPMENT SPECIFIED, FURNISHED AND INSTALLED UNDER OTHER DDISCIPLINES RACEWAYS, CONDUCTORS AND CONNECTIONS BY THIS ELECTRICAL CONTRACTOR.
1"C,2#12,1#12G 1"C,1-25/C TYPE 1	INDICATES RACEWAY AND CIRCUIT CONDUCTORS. FIRST NUMBER IS RACEWAY SIZE. THE FOLLOWING NUMBERS ARE THE CONDUCTOR QUANTITIES, SIZES, AND TYPES.
	DEMOLITION TO BE REMOVED OR DELETED

LINE WEIGHT

NEW — EXISTING

NOTE:
THIS IS A STANDARD LEGEND SHEET. SOME SYMBOLS OR ABBREVIATIONS MAY APPEAR ON THIS SHEET AND NOT BE UTILIZED ON PROJECT.

AMY L. CHAMPAGNE-BAKER, STATE OF FLORIDA, PROFESSIONAL ENGINEER, LICENSE NO. 73735 THIS ITEM HAS BEEN ELECTRONICALLY SIGNED AND SEALED BY **AMY L. CHAMPAGNE-BAKER, P.E.** ON **THE DATE INDICATED HERE** USING A **SHA AUTHENTICATION CODE**. PRINTED COPIES OF THIS DOCUMENT ARE NOT CONSIDERED SIGNED AND SEALED AND THE **SHA AUTHENTICATION CODE** MUST BE VERIFIED ON ANY ELECTRONIC COPIES.

HILLERS ELECTRICAL ENGINEERING, INC.
23257 STATE ROAD 7, SUITE 100
BOCA RATON, FLORIDA 33428
(561) 451-9165
(561) 451-4886 FAX
LICENSE NO: EB 0006877

DATE:	7/3/19
SCALE:	NONE
DESIGN BY:	ALC
DRAWN BY:	DEU
CHECKED BY:	JWK
APPROVED BY:	ALC
DATE:	
BY:	
DESCRIPTION:	

CRAVEN • THOMPSON AND ASSOCIATES, INC.
ENGINEERS • PLANNERS • SURVEYORS
3563 N.W. 53RD STREET, FORT LAUDERDALE, FLORIDA 33309
FAX: (954) 739-6409 TEL.: (954) 739-6400
FLORIDA LICENSED ENGINEERING, SURVEYING & MAPPING BUSINESS No. 271
FLORIDA LICENSED LANDSCAPE ARCHITECTURE BUSINESS No. C000114

MATERIAL SHOWN HEREON IS THE PROPERTY OF CRAVEN THOMPSON & ASSOCIATES, INC. AND SHALL NOT BE REPRODUCED IN WHOLE OR IN PART WITHOUT PERMISSION OF CRAVEN THOMPSON & ASSOCIATES, INC. CRAVEN THOMPSON & ASSOCIATES, INC. ©2019

PUMP STATION NO. 8 REPLACEMENT

PREPARED FOR:
CITY OF HALLANDALE BEACH

LIFT STATION ELECTRICAL LEGEND

Amy L. Champagne-Baker,PE
Digitally signed by Amy L. Champagne-Baker,PE
Reason: This item has been digitally signed and sealed
Date: 2019.08.06 15:58:51 -04'00'
Amy L. Champagne-Baker
Florida P.E. No. 73735

PROJECT NO.
17-0039-001-02

E-2

SHEET 15 OF 28

E:\PROJECTS\CA\CA81\dwg\100\17-0039-001-01-E02.dwg [E-2] Jul 03, 2019 4:11pm DUROUJO

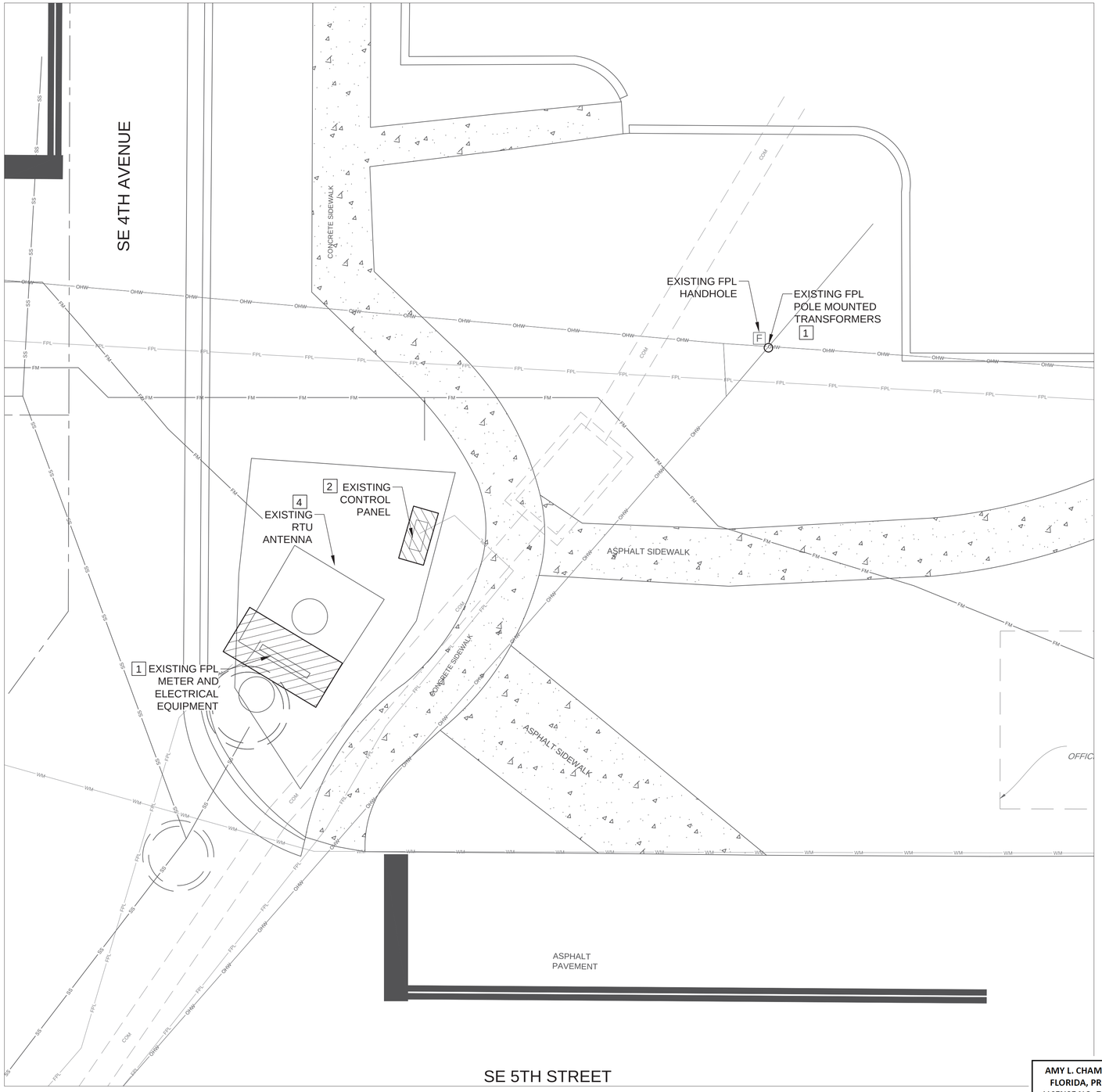

DEMOLITION NOTES:

1. CONTRACTOR SHALL COORDINATE WITH FPL, AND SHALL DISCONNECT AND REMOVE THE EXISTING POWER CONDUCTORS FROM FPL HANDHOLE TO THE EXISTING FPL METER, COMPLETE.
2. CONTRACTOR SHALL DISCONNECT, REMOVE AND DISPOSE OF THE CONTROL PANEL AND CONDUCTOR/CONDUIT SYSTEM, COMPLETE.
3. EXISTING LIFT STATION AND RTU ARE TO REMAIN IN SERVICE DURING CONSTRUCTION OF THE NEW LIFT STATION. CONTRACTOR SHALL PROVIDE TEMPORARY POWER AS NEEDED TO MAINTAIN ELECTRICAL SERVICE IN OPERATION.
4. CONTRACTOR SHALL DISCONNECT, REMOVE AND DELIVER EXISTING RTU CONTROL PANEL AND ANTENNA TO THE OWNER.

0 5' 10'

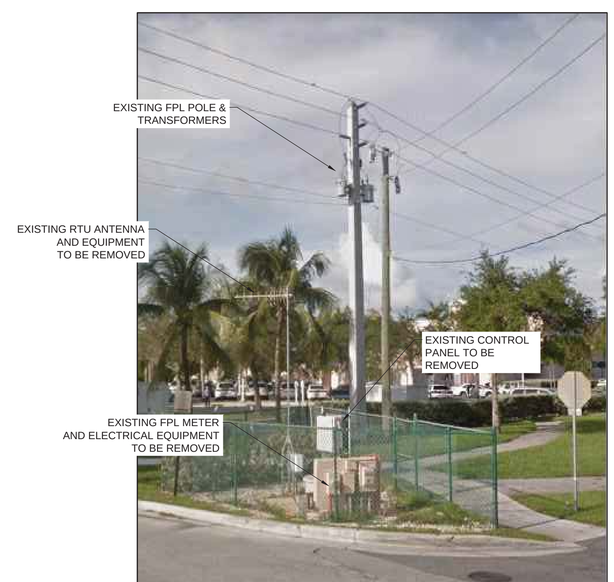

EXISTING LIFT STATION 8

NOT TO SCALE

WARNING!!! WARNING!!! WARNING!!!
THERE ARE A NUMBER OF PUBLIC UTILITIES, COMMUNICATIONS, UNDERGROUND CABLES AND PIPES TRAVERSING THE PROJECT SITE. THE ENGINEER HAS MADE EVERY ATTEMPT TO SHOW THE APPROXIMATE LOCATION OF ALL ITEMS. HOWEVER, THE ENGINEER IS NOT RESPONSIBLE FOR SHOWING OR LOCATING EVERY ITEM CURRENTLY IN PLACE. IT SHALL BE THE RESPONSIBILITY OF THE CONTRACTOR TO HAVE EVERY ITEM LOCATED, FLAGGED, AND IDENTIFIED PRIOR TO STARTUP OF CONSTRUCTION. ANY DAMAGE DONE TO ANY OF THE EXISTING ITEMS SHALL BE THE RESPONSIBILITY OF THE CONTRACTOR. THE CONTRACTOR SHALL REPAIR ANY ITEM DAMAGED, CAUSED BY HIS ACTIONS, WITH NO ADDITIONAL COMPENSATION.

CALL 48 HOURS BEFORE YOU DIG
IT'S THE LAW! DIAL 811
811 Know what's below. Call before you dig.
SUNSHINE STATE ONE CALL OF FLORIDA, INC.

AMY L. CHAMPAGNE-BAKER, STATE OF FLORIDA, PROFESSIONAL ENGINEER, LICENSE NO. 73735 THIS ITEM HAS BEEN ELECTRONICALLY SIGNED AND SEALED BY **AMY L. CHAMPAGNE-BAKER, P.E.** ON **THE DATE INDICATED HERE** USING A **SHA AUTHENTICATION CODE**. PRINTED COPIES OF THIS DOCUMENT ARE NOT CONSIDERED SIGNED AND SEALED AND THE **SHA AUTHENTICATION CODE** MUST BE VERIFIED ON ANY ELECTRONIC COPIES.

HILLERS ELECTRICAL ENGINEERING, INC.
23257 STATE ROAD 7, SUITE 100
BOCA RATON, FLORIDA 33428
(561) 451-9165
(561) 451-4886 FAX
LICENSE NO: EB 0006877

DATE:	7/3/19
SCALE:	1"=5'
DESIGN BY:	ALC
DRAWN BY:	DEU
CHECKED BY:	JWK
APPROVED BY:	ALC

BY:	DATE:	DESCRIPTION:

CRAVEN • THOMPSON AND ASSOCIATES, INC.
ENGINEERS • PLANNERS • SURVEYORS
3563 N.W. 53RD STREET, FORT LAUDERDALE, FLORIDA 33309
FAX: (954) 739-6409 TEL.: (954) 739-6400
FLORIDA LICENSED ENGINEERING, SURVEYING & MAPPING BUSINESS No. 271
FLORIDA LICENSED LANDSCAPE ARCHITECTURE BUSINESS No. C000114

MATERIAL SHOWN HEREON IS THE PROPERTY OF CRAVEN THOMPSON & ASSOCIATES, INC. AND SHALL NOT BE REPRODUCED IN WHOLE OR IN PART WITHOUT PERMISSION OF CRAVEN THOMPSON & ASSOCIATES, INC. CRAVEN THOMPSON & ASSOCIATES, INC. COPYRIGHT © 2019

PUMP STATION NO. 8 REPLACEMENT

PREPARED FOR:
CITY OF HALLANDALE BEACH

ELECTRICAL DEMO SITE PLAN

Amy L. Champagne-Baker,PE
Digitally signed by Amy L. Champagne-Baker,PE
Reason: This item has been digitally signed and sealed
Date: 2019.08.06 15:59:12 -04'00'
Amy L. Champagne-Baker
Florida P.E. No. 73735

PROJECT NO.
17-0039-001-02

E-3

SHEET 16 OF 28

E:\PROJECTS\CA\CA81\dwg\100\17-0039-001-01-E03.dwg [E-3] Jul 03, 2019 4:07pm DURQUJO

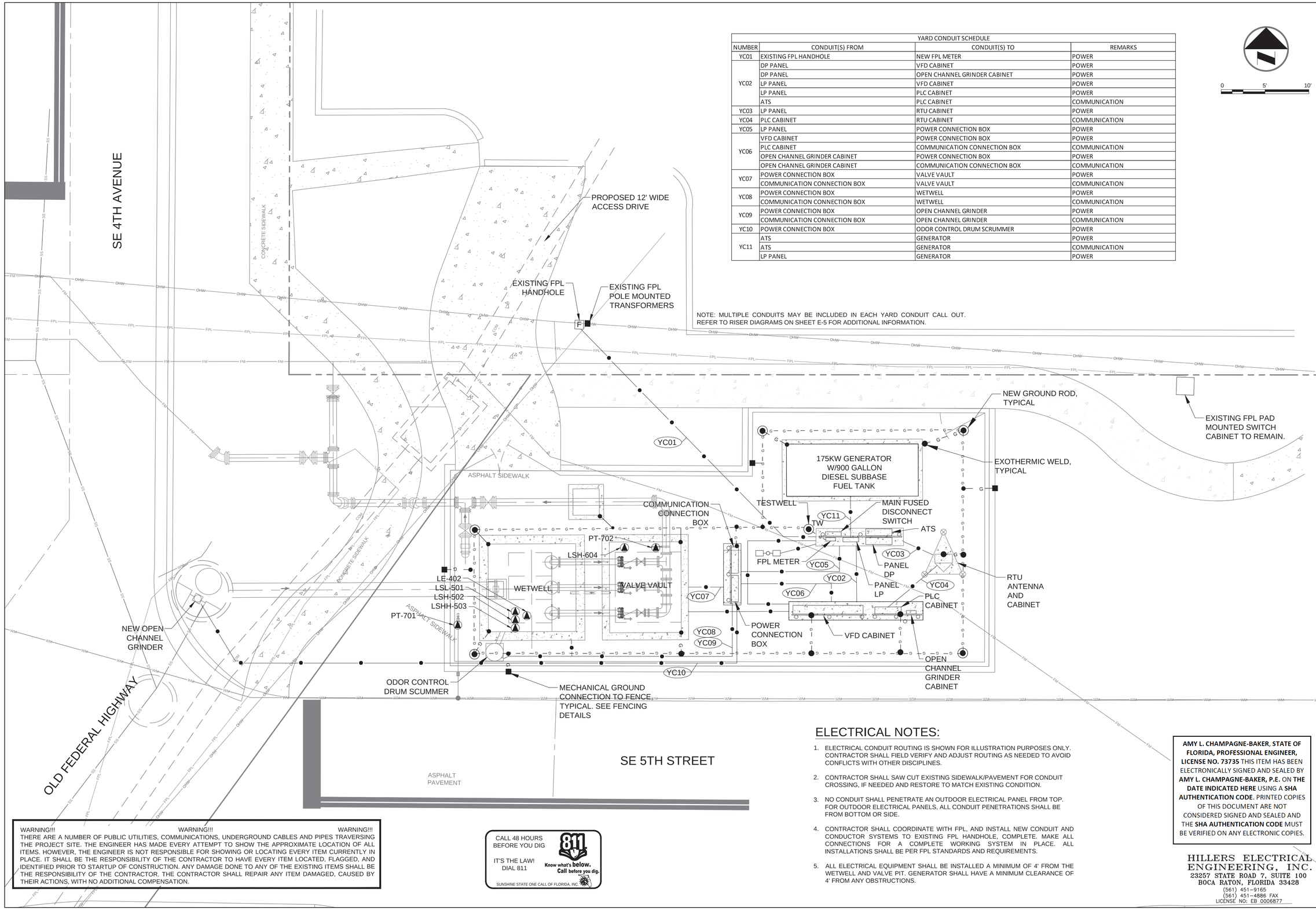

YARD CONDUIT SCHEDULE			
NUMBER	CONDUIT(S) FROM	CONDUIT(S) TO	REMARKS
YC01	EXISTING FPL HANDHOLE	NEW FPL METER	POWER
YC02	DP PANEL	VFD CABINET	POWER
	DP PANEL	OPEN CHANNEL GRINDER CABINET	POWER
	LP PANEL	VFD CABINET	POWER
	LP PANEL	PLC CABINET	POWER
	ATS	PLC CABINET	COMMUNICATION
YC03	LP PANEL	RTU CABINET	POWER
YC04	PLC CABINET	RTU CABINET	COMMUNICATION
YC05	LP PANEL	POWER CONNECTION BOX	POWER
YC06	VFD CABINET	POWER CONNECTION BOX	POWER
	PLC CABINET	COMMUNICATION CONNECTION BOX	COMMUNICATION
	OPEN CHANNEL GRINDER CABINET	POWER CONNECTION BOX	POWER
	OPEN CHANNEL GRINDER CABINET	COMMUNICATION CONNECTION BOX	COMMUNICATION
YC07	POWER CONNECTION BOX	VALVE VAULT	POWER
	COMMUNICATION CONNECTION BOX	VALVE VAULT	COMMUNICATION
YC08	POWER CONNECTION BOX	WETWELL	POWER
	COMMUNICATION CONNECTION BOX	WETWELL	COMMUNICATION
YC09	POWER CONNECTION BOX	OPEN CHANNEL GRINDER	POWER
	COMMUNICATION CONNECTION BOX	OPEN CHANNEL GRINDER	COMMUNICATION
YC10	POWER CONNECTION BOX	ODOR CONTROL DRUM SCRUMMER	POWER
YC11	ATS	GENERATOR	POWER
	ATS	GENERATOR	COMMUNICATION
	LP PANEL	GENERATOR	POWER

ELECTRICAL NOTES:

1. ELECTRICAL CONDUIT ROUTING IS SHOWN FOR ILLUSTRATION PURPOSES ONLY. CONTRACTOR SHALL FIELD VERIFY AND ADJUST ROUTING AS NEEDED TO AVOID CONFLICTS WITH OTHER DISCIPLINES.
2. CONTRACTOR SHALL SAW CUT EXISTING SIDEWALK/PAVEMENT FOR CONDUIT CROSSING, IF NEEDED AND RESTORE TO MATCH EXISTING CONDITION.
3. NO CONDUIT SHALL PENETRATE AN OUTDOOR ELECTRICAL PANEL FROM TOP. FOR OUTDOOR ELECTRICAL PANELS, ALL CONDUIT PENETRATIONS SHALL BE FROM BOTTOM OR SIDE.
4. CONTRACTOR SHALL COORDINATE WITH FPL, AND INSTALL NEW CONDUIT AND CONDUCTOR SYSTEMS TO EXISTING FPL HANDHOLE, COMPLETE. MAKE ALL CONNECTIONS FOR A COMPLETE WORKING SYSTEM IN PLACE. ALL INSTALLATIONS SHALL BE PER FPL STANDARDS AND REQUIREMENTS.
5. ALL ELECTRICAL EQUIPMENT SHALL BE INSTALLED A MINIMUM OF 4' FROM THE WETWELL AND VALVE PIT. GENERATOR SHALL HAVE A MINIMUM CLEARANCE OF 4' FROM ANY OBSTRUCTIONS.

WARNING!!! WARNING!!! WARNING!!!
THERE ARE A NUMBER OF PUBLIC UTILITIES, COMMUNICATIONS, UNDERGROUND CABLES AND PIPES TRAVERSING THE PROJECT SITE. THE ENGINEER HAS MADE EVERY ATTEMPT TO SHOW THE APPROXIMATE LOCATION OF ALL ITEMS. HOWEVER, THE ENGINEER IS NOT RESPONSIBLE FOR SHOWING OR LOCATING EVERY ITEM CURRENTLY IN PLACE. IT SHALL BE THE RESPONSIBILITY OF THE CONTRACTOR TO HAVE EVERY ITEM LOCATED, FLAGGED, AND IDENTIFIED PRIOR TO STARTUP OF CONSTRUCTION. ANY DAMAGE DONE TO ANY OF THE EXISTING ITEMS SHALL BE THE RESPONSIBILITY OF THE CONTRACTOR. THE CONTRACTOR SHALL REPAIR ANY ITEM DAMAGED, CAUSED BY THEIR ACTIONS, WITH NO ADDITIONAL COMPENSATION.

CALL 48 HOURS BEFORE YOU DIG
IT'S THE LAW! DIAL 811
811 Know what's below. Call before you dig.
SUNSHINE STATE ONE CALL OF FLORIDA, INC.

AMY L. CHAMPAGNE-BAKER, STATE OF FLORIDA, PROFESSIONAL ENGINEER, LICENSE NO. 73735 THIS ITEM HAS BEEN ELECTRONICALLY SIGNED AND SEALED BY **AMY L. CHAMPAGNE-BAKER, P.E.** ON **THE DATE INDICATED HERE** USING A **SHA AUTHENTICATION CODE**. PRINTED COPIES OF THIS DOCUMENT ARE NOT CONSIDERED SIGNED AND SEALED AND THE **SHA AUTHENTICATION CODE** MUST BE VERIFIED ON ANY ELECTRONIC COPIES.

HILLERS ELECTRICAL ENGINEERING, INC.
23257 STATE ROAD 7, SUITE 100
BOCA RATON, FLORIDA 33428
(561) 451-9165
(561) 451-4886 FAX
LICENSE NO: EB 0006877

DATE:	7/3/19
SCALE:	1"=5'
DESIGN BY:	ALC
DRAWN BY:	DEU
CHECKED BY:	JWK
APPROVED BY:	ALC

DESCRIPTION:	BY:	DATE:

CRAVEN • THOMPSON AND ASSOCIATES, INC.
ENGINEERS • PLANNERS • SURVEYORS
3563 N.W. 53RD STREET, FORT LAUDERDALE, FLORIDA 33309
FAX: (954) 739-6409 TEL.: (954) 739-6400
FLORIDA LICENSED ENGINEERING, SURVEYING & MAPPING BUSINESS No. 271
FLORIDA LICENSED LANDSCAPE ARCHITECTURE BUSINESS No. C000114

MATERIAL SHOWN HEREON IS THE PROPERTY OF CRAVEN THOMPSON & ASSOCIATES, INC. AND SHALL NOT BE REPRODUCED IN WHOLE OR IN PART WITHOUT PERMISSION OF CRAVEN THOMPSON & ASSOCIATES, INC. CRAVEN THOMPSON & ASSOCIATES, INC. COPYRIGHT © 2019

PUMP STATION NO. 8 REPLACEMENT

PREPARED FOR:
CITY OF HALLANDALE BEACH

ELECTRICAL SITE PLAN

Amy L. Champagne-Baker,PE
Digitally signed by Amy L. Champagne-Baker,PE
Reason: This item has been digitally signed and sealed
Date: 2019.08.06 15:59:31 -04'00'
Amy L. Champagne-Baker
Florida P.E. No. 73735

PROJECT NO.
17-0039-001-02

E-4

SHEET 17 OF 28

E:\PROJECTS\CA\CA81\dwg\100\17-0039-001-01-E04.dwg [E-4] Jul 03, 2019 4:07pm DURQUJO

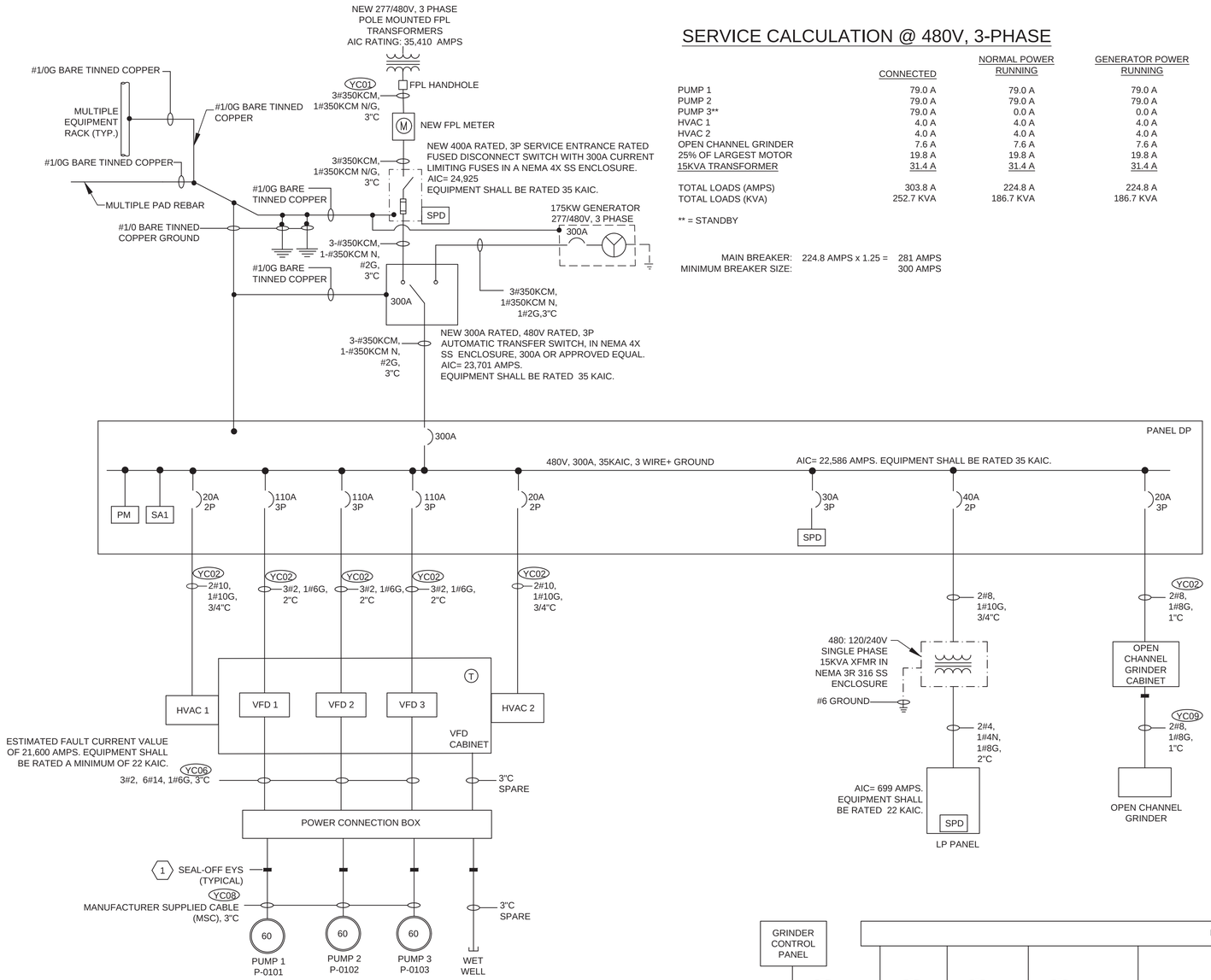

ELECTRICAL ONE LINE DIAGRAM

NOT TO SCALE

SERVICE CALCULATION @ 480V, 3-PHASE

	CONNECTED	NORMAL POWER RUNNING	GENERATOR POWER RUNNING
PUMP 1	79.0 A	79.0 A	79.0 A
PUMP 2	79.0 A	79.0 A	79.0 A
PUMP 3**	79.0 A	0.0 A	0.0 A
HVAC 1	4.0 A	4.0 A	4.0 A
HVAC 2	4.0 A	4.0 A	4.0 A
OPEN CHANNEL GRINDER	7.6 A	7.6 A	7.6 A
25% OF LARGEST MOTOR	19.8 A	19.8 A	19.8 A
15KVA TRANSFORMER	31.4 A	31.4 A	31.4 A
TOTAL LOADS (AMPS)	303.8 A	224.8 A	224.8 A
TOTAL LOADS (KVA)	252.7 KVA	186.7 KVA	186.7 KVA

** = STANDBY

MAIN BREAKER: 224.8 AMPS x 1.25 = 281 AMPS
MINIMUM BREAKER SIZE: 300 AMPS

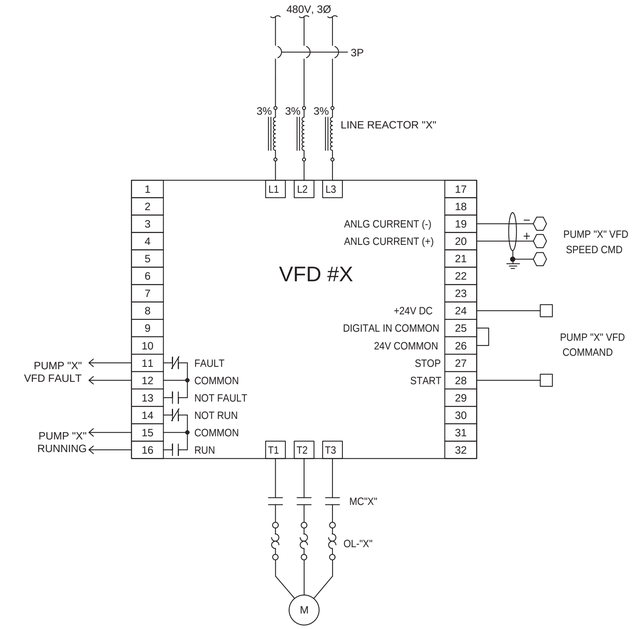

VFD"X" SCHEMATIC DIAGRAM

NOT TO SCALE
NOTE: X= 1, 2, 3

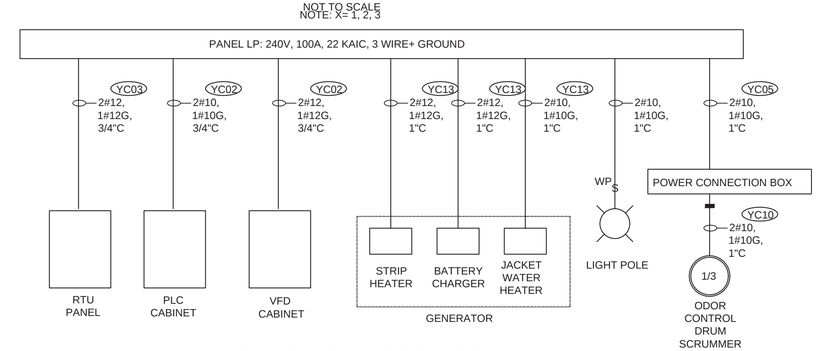

PANEL LP RISER DIAGRAM

NOT TO SCALE

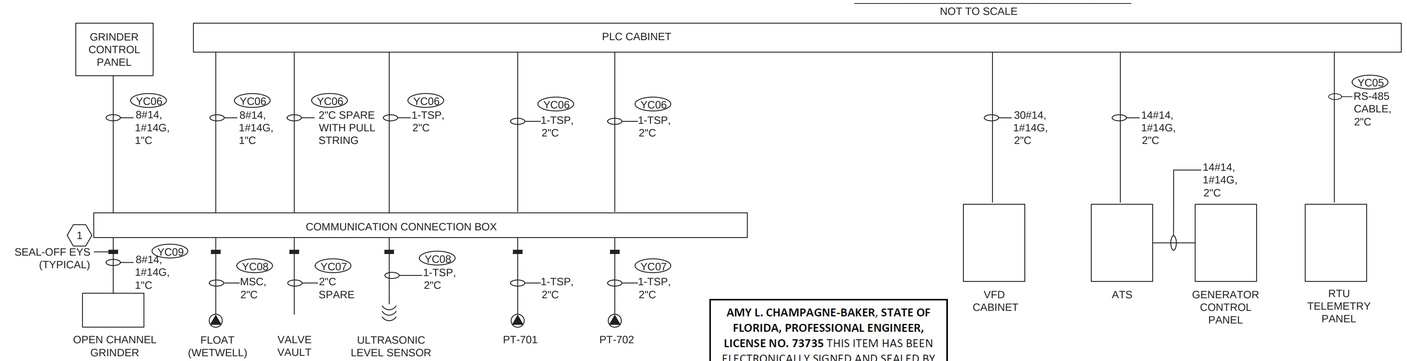

CONTROL RISER DIAGRAM

NOT TO SCALE

KEYED NOTES:

1. AREA INSIDE WETWELL IS CONSIDERED A CLASS 1, DIVISION 2 AREA IN ACCORDANCE WITH THE NATIONAL ELECTRICAL CODE, SEAL-OFFS MUST BE USED ON ALL CONDUIT SYSTEMS AS REQUIRED BY THE NEC.

AMY L. CHAMPAGNE-BAKER, STATE OF FLORIDA, PROFESSIONAL ENGINEER, LICENSE NO. 73735 THIS ITEM HAS BEEN ELECTRONICALLY SIGNED AND SEALED BY **AMY L. CHAMPAGNE-BAKER, P.E.** ON **THE DATE INDICATED HERE** USING A **SHA AUTHENTICATION CODE**. PRINTED COPIES OF THIS DOCUMENT ARE NOT CONSIDERED SIGNED AND SEALED AND THE **SHA AUTHENTICATION CODE** MUST BE VERIFIED ON ANY ELECTRONIC COPIES.

HILLERS ELECTRICAL ENGINEERING, INC.
23257 STATE ROAD 7, SUITE 100
BOCA RATON, FLORIDA 33428
(561) 451-9165
(561) 451-4886 FAX
LICENSE NO: EB 0006877

DATE:	7/3/19
SCALE:	NONE
DESIGN BY:	ALC
DRAWN BY:	DEU
CHECKED BY:	JWK
APPROVED BY:	ALC
DATE:	
BY:	
DESCRIPTION:	

CRAVEN • THOMPSON AND ASSOCIATES, INC.
ENGINEERS • PLANNERS • SURVEYORS
3563 N.W. 53RD STREET, FORT LAUDERDALE, FLORIDA 33309
FAX: (954) 739-6409 TEL.: (954) 739-6400
FLORIDA LICENSED ENGINEERING, SURVEYING & MAPPING BUSINESS No. 271
FLORIDA LICENSED LANDSCAPE ARCHITECTURE BUSINESS No. C000114

MATERIAL SHOWN HEREON IS THE PROPERTY OF CRAVEN THOMPSON & ASSOCIATES, INC. AND SHALL NOT BE REPRODUCED IN WHOLE OR IN PART, WITHOUT THE WRITTEN PERMISSION OF CRAVEN THOMPSON & ASSOCIATES, INC. CRAVEN THOMPSON & ASSOCIATES, INC. COPYRIGHT © 2019

PUMP STATION NO. 8 REPLACEMENT

PREPARED FOR:
CITY OF HALLANDALE BEACH

ELECTRICAL ONE LINE & RISER DIAGRAM

Amy L. Champagne-Baker,PE
Digitally signed by Amy L. Champagne-Baker,PE
Reason: This item has been digitally signed and sealed
Date: 2019.08.06 15:59:50 -04'00'
Amy L. Champagne-Baker
Florida P.E. No. 73735

PROJECT NO.
17-0039-001-02

E-5

SHEET 18 OF 28

E:\PROJECTS\CA\CA81\dwg\100\17-0039-001-01-E05.dwg [E-5] Jul 03, 2019 4:07pm DUROUJO

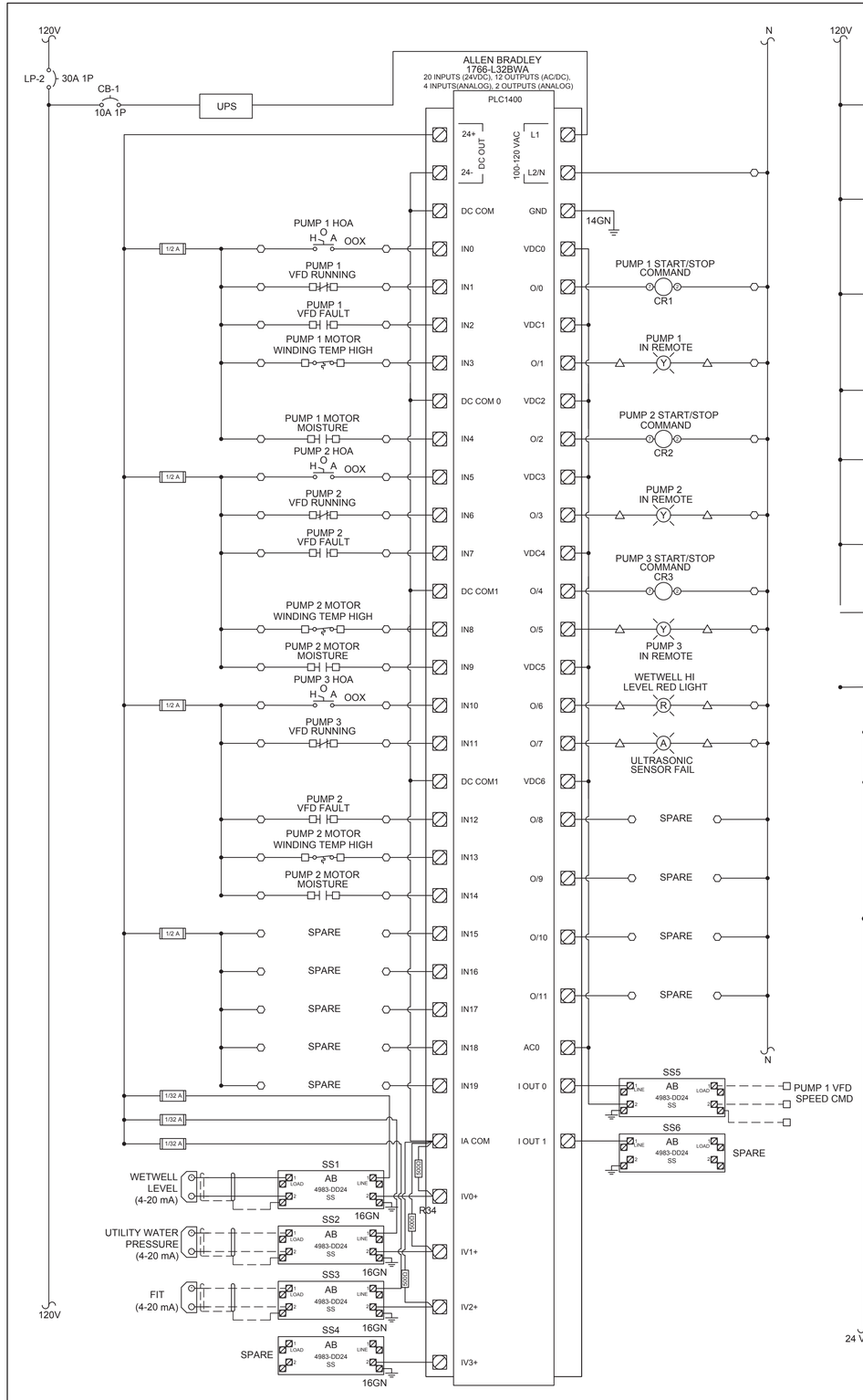

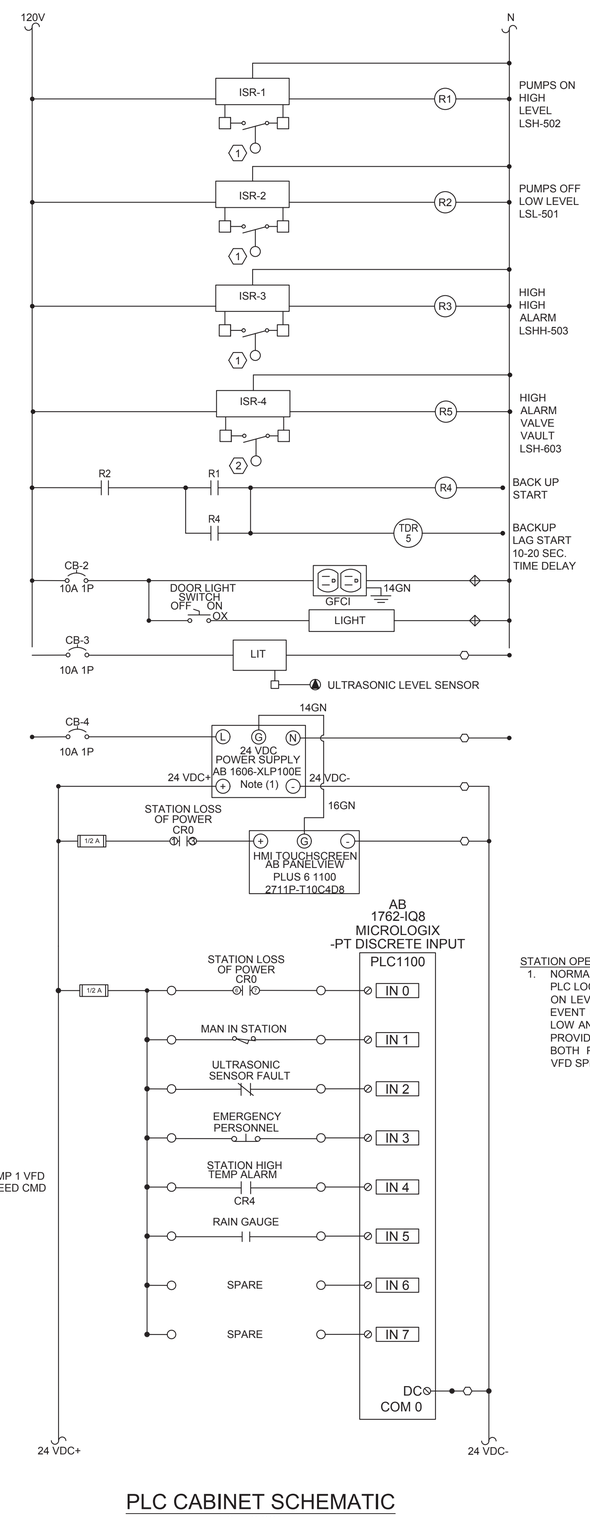

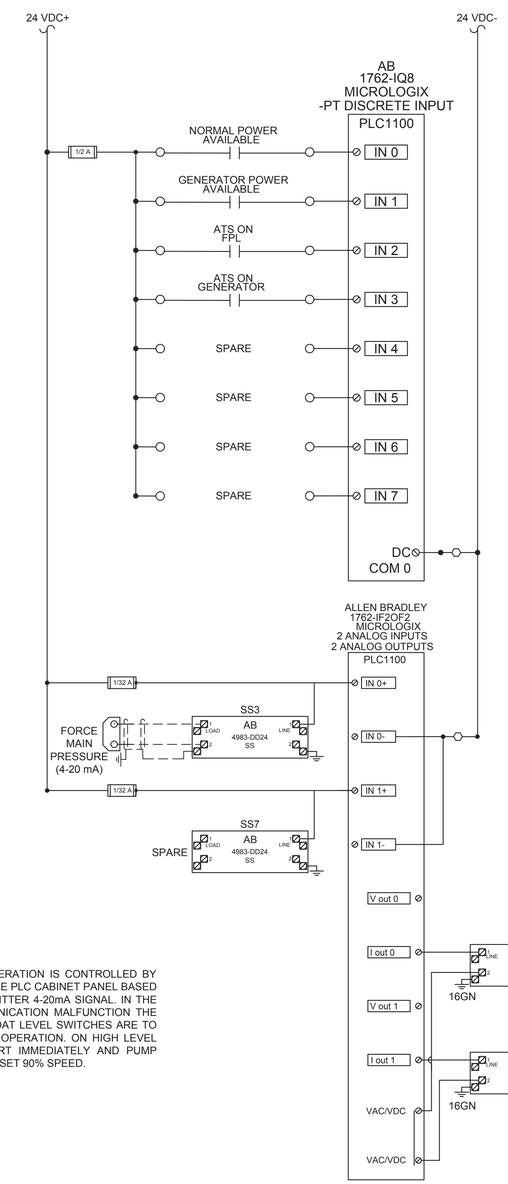

STATION OPERATION:

1. NORMAL PUMP OPERATION IS CONTROLLED BY PLC LOCATED IN THE PLC CABINET PANEL BASED ON LEVEL TRANSMITTER 4-20mA SIGNAL. IN THE EVENT OF COMMUNICATION MALFUNCTION THE LOW AND HIGH FLOAT LEVEL SWITCHES ARE TO PROVIDE BACK-UP OPERATION. ON HIGH LEVEL BOTH PUMPS START IMMEDIATELY AND PUMP VFD SPEED TO PRESET 90% SPEED.

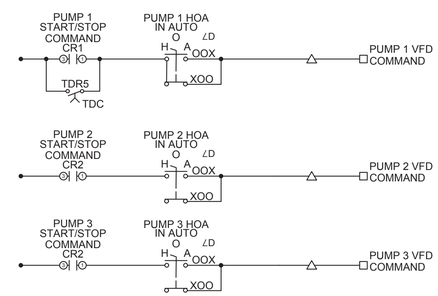

PLC CABINET SCHEMATIC

NOT TO SCALE

AMY L. CHAMPAGNE-BAKER, STATE OF FLORIDA, PROFESSIONAL ENGINEER, LICENSE NO. 73735 THIS ITEM HAS BEEN ELECTRONICALLY SIGNED AND SEALED BY **AMY L. CHAMPAGNE-BAKER, P.E.** ON **THE DATE INDICATED HERE** USING A **SHA AUTHENTICATION CODE**. PRINTED COPIES OF THIS DOCUMENT ARE NOT CONSIDERED SIGNED AND SEALED AND THE **SHA AUTHENTICATION CODE** MUST BE VERIFIED ON ANY ELECTRONIC COPIES.

HILLERS ELECTRICAL ENGINEERING, INC.
23257 STATE ROAD 7, SUITE 100
BOCA RATON, FLORIDA 33428
(561) 451-9165
(561) 451-4886 FAX
LICENSE NO: EB 0006877

DATE:	7/3/19
SCALE:	NONE
DESIGN BY:	ALC
DRAWN BY:	DEU
CHECKED BY:	JWK
APPROVED BY:	ALC
DATE:	
BY:	
DESCRIPTION:	

CRAVEN • THOMPSON AND ASSOCIATES, INC.
ENGINEERS • PLANNERS • SURVEYORS
3563 N.W. 53RD STREET, FORT LAUDERDALE, FLORIDA 33309
FAX: (954) 739-6409 TEL.: (954) 739-6400
FLORIDA LICENSED ENGINEERING, SURVEYING & MAPPING BUSINESS No. 271
FLORIDA LICENSED LANDSCAPE ARCHITECTURE BUSINESS No. C000114

MATERIAL SHOWN HEREON IS THE PROPERTY OF CRAVEN THOMPSON & ASSOCIATES, INC. AND SHALL NOT BE REPRODUCED IN WHOLE OR IN PART WITHOUT PERMISSION OF CRAVEN THOMPSON & ASSOCIATES, INC. OR HIS/HER PROJECT PARTNER. COPYRIGHT © CTA INC.

PUMP STATION NO. 8 REPLACEMENT

PREPARED FOR: CITY OF HALLANDALE BEACH

ELECTRICAL SCHEMATIC

Amy L. Champagne-Baker,PE

Digitally signed by Amy L. Champagne-Baker,PE
Reason: This item has been digitally signed and sealed
Date: 2019.08.06 16:00:06 -04'00'

Amy L. Champagne-Baker
Florida P.E. No. 73735

PROJECT NO.
17-0039-001-02

E-6

SHEET 19 OF 28

E:\PROJECTS\CA\CA81\dwg\100\17-0039-001-01-E06.dwg [E-6] Jul 03, 2019 4:07pm DUROUIJO

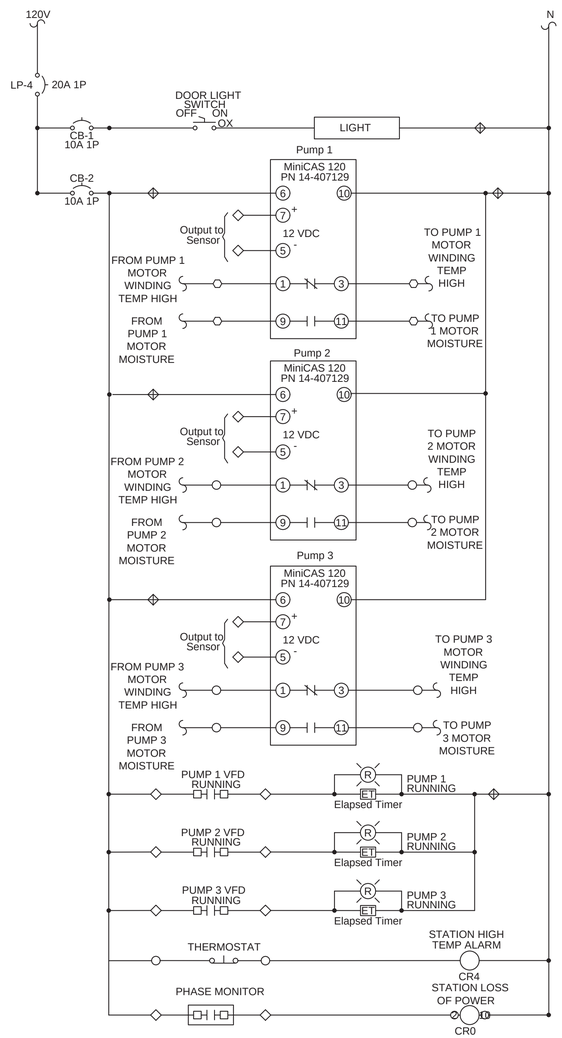

VFD CABINET SCHEMATIC

NOT TO SCALE

AMY L. CHAMPAGNE-BAKER, STATE OF FLORIDA, PROFESSIONAL ENGINEER, LICENSE NO. 73735 THIS ITEM HAS BEEN ELECTRONICALLY SIGNED AND SEALED BY **AMY L. CHAMPAGNE-BAKER, P.E.** ON **THE DATE INDICATED HERE** USING A **SHA AUTHENTICATION CODE**. PRINTED COPIES OF THIS DOCUMENT ARE NOT CONSIDERED SIGNED AND SEALED AND THE **SHA AUTHENTICATION CODE** MUST BE VERIFIED ON ANY ELECTRONIC COPIES.

HILLERS ELECTRICAL ENGINEERING, INC.
23257 STATE ROAD 7, SUITE 100
BOCA RATON, FLORIDA 33428
(561) 451-9165
(561) 451-4886 FAX
LICENSE NO: EB 0006877

DATE:	7/3/19
SCALE:	NONE
DESIGN BY:	ALC
DRAWN BY:	DEU
CHECKED BY:	JWK
APPROVED BY:	ALC

BY:	DATE:	DESCRIPTION:

CRAVEN • THOMPSON AND ASSOCIATES, INC.
ENGINEERS • PLANNERS • SURVEYORS
3563 N.W. 53RD STREET, FORT LAUDERDALE, FLORIDA 33309
FAX: (954) 739-6409 TEL.: (954) 739-6400
FLORIDA LICENSED ENGINEERING, SURVEYING & MAPPING BUSINESS No. 271
FLORIDA LICENSED LANDSCAPE ARCHITECTURE BUSINESS No. C000114

MATERIAL SHOWN HEREON IS THE PROPERTY OF CRAVEN THOMPSON & ASSOCIATES, INC. AND SHALL NOT BE REPRODUCED IN WHOLE OR IN PART WITHOUT PERMISSION OF CRAVEN THOMPSON & ASSOCIATES, INC. CRAVEN THOMPSON & ASSOCIATES, INC. COPYRIGHT © 2019

PUMP STATION NO. 8 REPLACEMENT

PREPARED FOR:
CITY OF HALLANDALE BEACH

ELECTRICAL SCHEMATIC

Amy L. Champagne-Baker,PE
Digitally signed by Amy L. Champagne-Baker,PE
Reason: This item has been digitally signed and sealed
Date: 2019.08.06 16:00:24 -04'00'

Amy L. Champagne-Baker
Florida P.E. No. 73735

PROJECT NO.
17-0039-001-02

E-7

SHEET 20 OF 28

E:\PROJECTS\CA\CA81\dwg\100\17-0039-001-01-E06.dwg [E-7] Jul 03, 2019 4:07pm DURQUJO

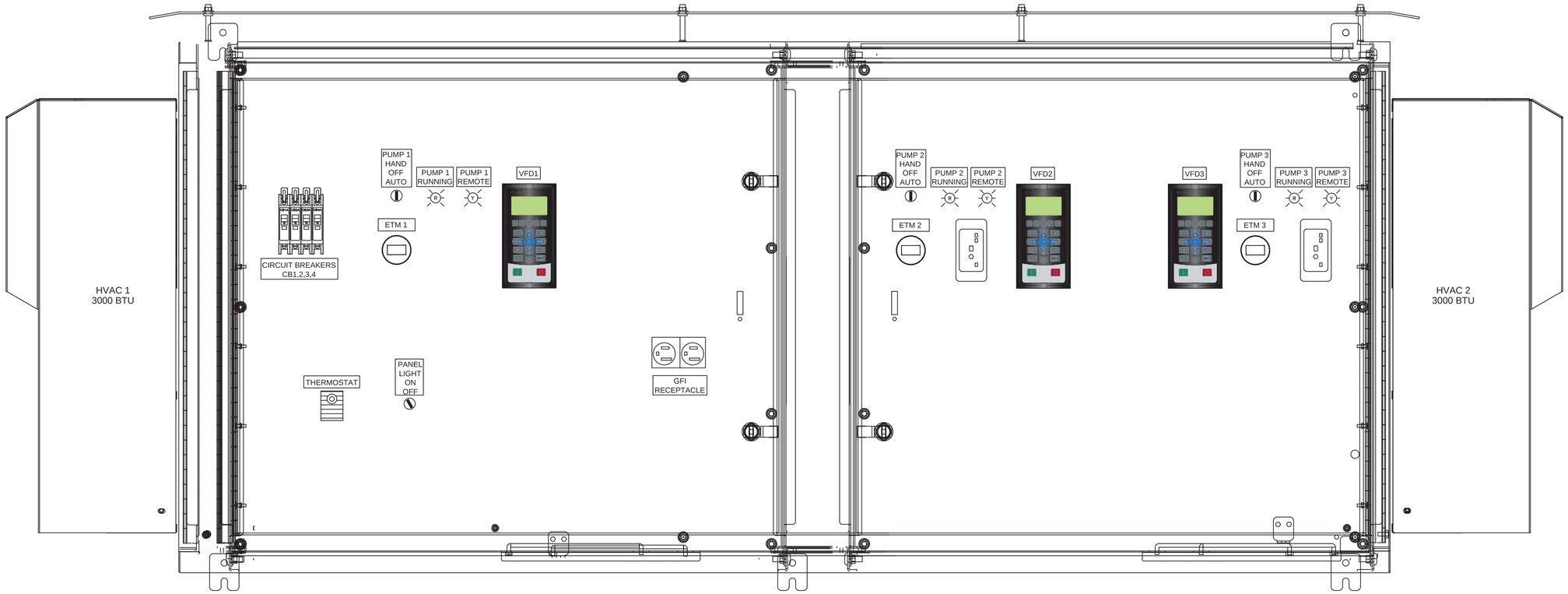

DEADFRONT VIEW

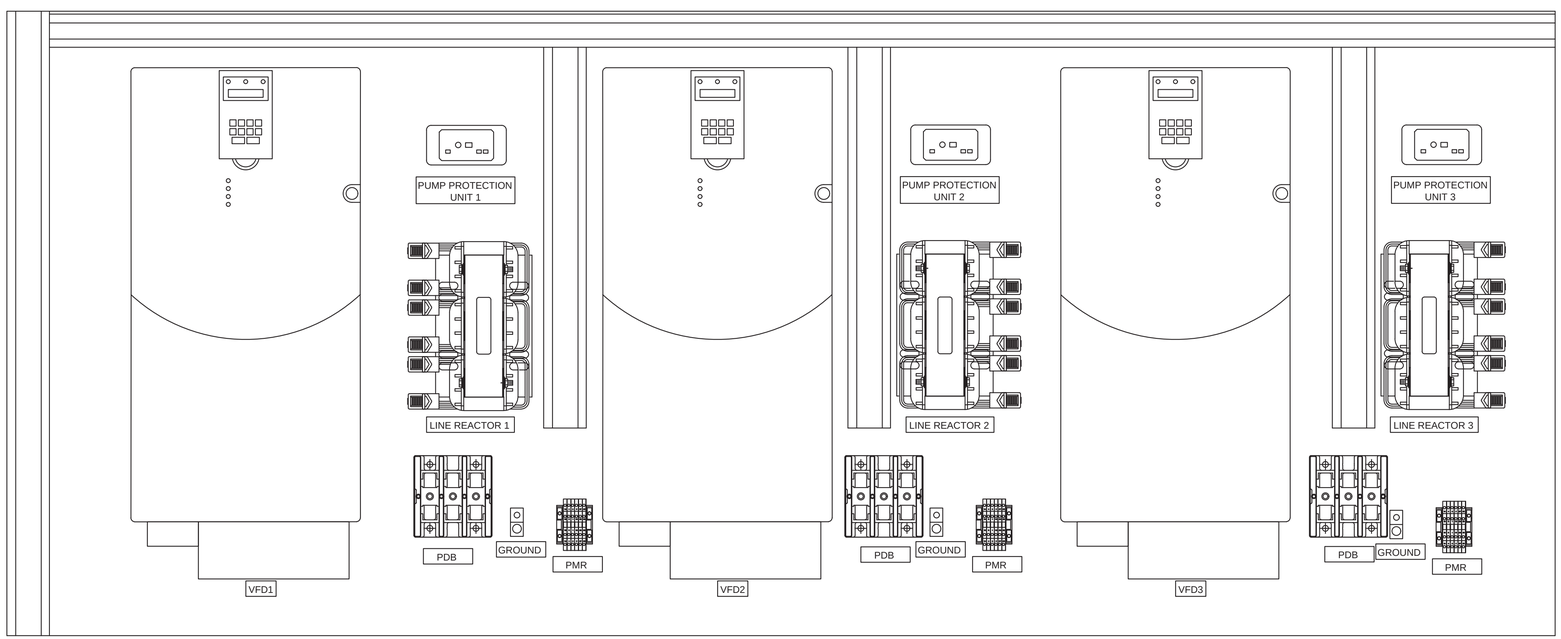

INTERNAL VIEW

VFD CABINET LAYOUT

NOT TO SCALE

NOTE:

VFD CABINET TO BE A NEMA 4X STAINLESS STEEL 316 ENCLOSURE, MINIMUM DIMENSIONS SHALL BE 80"W x 36"H x 20"D. ENCLOSURE SHALL BE PAINTED WHITE WITH SUNSHIELDS LOCATED AT THE TOP OF THE CABINET.

AMY L. CHAMPAGNE-BAKER, STATE OF FLORIDA, PROFESSIONAL ENGINEER, LICENSE NO. 73735 THIS ITEM HAS BEEN ELECTRONICALLY SIGNED AND SEALED BY **AMY L. CHAMPAGNE-BAKER, P.E.** ON **THE DATE INDICATED HERE** USING A **SHA AUTHENTICATION CODE**. PRINTED COPIES OF THIS DOCUMENT ARE NOT CONSIDERED SIGNED AND SEALED AND THE **SHA AUTHENTICATION CODE** MUST BE VERIFIED ON ANY ELECTRONIC COPIES.

HILLERS ELECTRICAL ENGINEERING, INC.
23257 STATE ROAD 7, SUITE 100
BOCA RATON, FLORIDA 33428
(561) 451-9165
(561) 451-4886 FAX
LICENSE NO: EB 0006877

DATE:	7/3/19
SCALE:	NONE
DESIGN BY:	ALC
DRAWN BY:	DEU
CHECKED BY:	JWK
APPROVED BY:	ALC

BY:	DATE:	DESCRIPTION:

CRAVEN • THOMPSON AND ASSOCIATES, INC.
ENGINEERS • PLANNERS • SURVEYORS
3563 N.W. 53RD STREET, FORT LAUDERDALE, FLORIDA 33309
FAX: (954) 739-6409 TEL.: (954) 739-6400
FLORIDA LICENSED ENGINEERING, SURVEYING & MAPPING BUSINESS No. 271
FLORIDA LICENSED LANDSCAPE ARCHITECTURE BUSINESS No. C000114

MATERIAL SHOWN HEREON IS THE PROPERTY OF CRAVEN THOMPSON & ASSOCIATES, INC. AND SHALL NOT BE REPRODUCED IN WHOLE OR IN PART WITHOUT PERMISSION OF CRAVEN THOMPSON & ASSOCIATES, INC.
CRAVEN THOMPSON & ASSOCIATES, INC. COPYRIGHT © 2019

PUMP STATION NO. 8 REPLACEMENT

PREPARED FOR:
CITY OF HALLANDALE BEACH

ELECTRICAL VFD CABINET DETAILS

Amy L. Champagne-Baker,PE
Digitally signed by Amy L. Champagne-Baker,PE
Reason: This item has been digitally signed and sealed
Date: 2019.08.06 16:00:47 -04'00'
Amy L. Champagne-Baker
Florida P.E. No. 73735

PROJECT NO.
17-0039-001-02

E-8

SHEET 21 OF 28

E:\PROJECTS\CA\CA81\dwg\100\17-0039-001-01-E08.dwg [E-8] Jul 03, 2019 4:07pm DURQUUJO

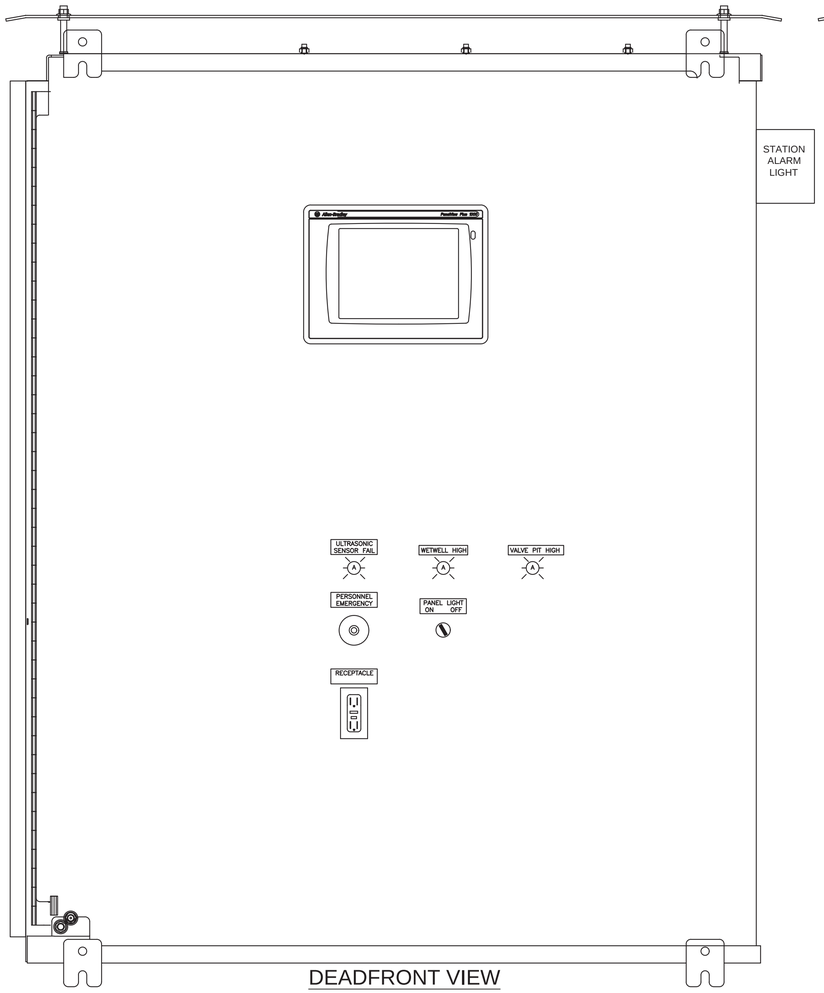

DEADFRONT VIEW

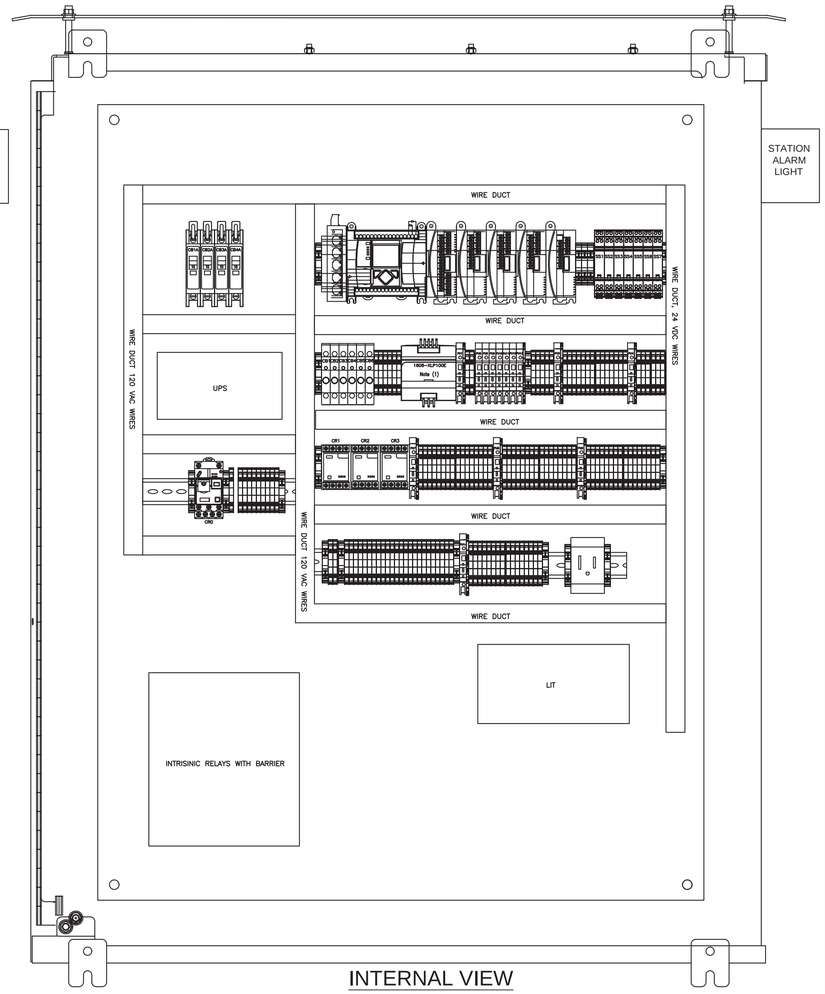

INTERNAL VIEW

PLC CABINET LAYOUT

NOT TO SCALE

NOTE:

PLC CABINET TO BE A NEMA 4X STAINLESS STEEL 316 ENCLOSURE, MINIMUM DIMENSIONS SHALL BE 48"W x 48"H x 15"D. ENCLOSURE SHALL BE PAINTED WHITE WITH SUNSHIELDS LOCATED AT THE TOP AND SIDES OF THE CABINET.

QUANTITY SHOWN ON BILL OF MATERIAL IS MINIMUM REQUIREMENTS. PROVIDE AND INSTALL ADDITIONAL COMPONENTS AS NEEDED FOR A COMPLETE AND FUNCTIONAL LIFT STATION CONTROL PANEL IN PLACE.

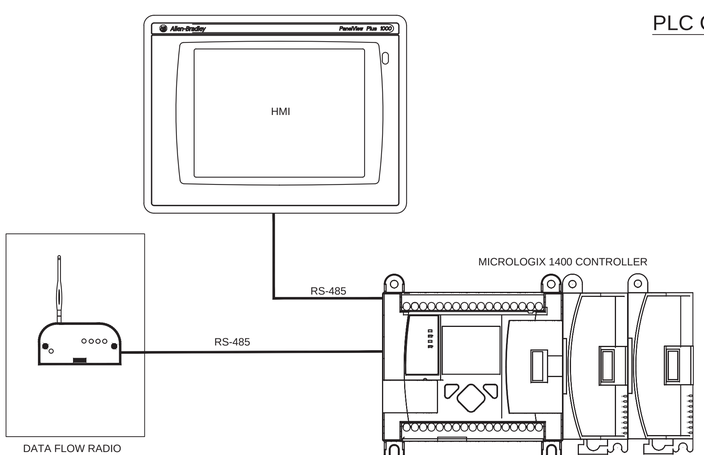

COMMUNICATIONS SCHEMATIC

NOT TO SCALE

NOTE:

CONTRACTOR SHALL COORDINATE WITH DATA FLOW SYSTEMS(DFS) FOR NEW CABINET, RADIO AND CONTROLLER. CONTRACTOR SHALL SUBCONTRACT DFS FOR ALL PROGRAMMING AND COMPONENTS FOR TELEMETRY SYSTEM. PROVIDE ALL MODULES, POWER SUPPLIES AND CONNECTIONS VIA MODBUS BETWEEN DFS AND MICROLOGIX 1400 CONTROL INSIDE PLC CABINET FOR A COMPLETE WORKING SYSTEM IN PLACE. SEE SPECIFICATIONS FOR ADDITIONAL INFORMATION.

BILL OF MATERIAL

ITEM NO.	DESCRIPTION	MANUFACTURER & PART NUMBER
1	MICROLOGIX 1400 PROGRAMABLE CONTROLLER	ALLEN-BRADLEY, 1766-L32BWA
2	8-POINT SINK/SOURCE 24V INPUT MODULE	ALLEN-BRADLEY, 1762-IQ8
3	4-CHANNEL VOLTAGE/CURR. 2ANALOG INPUT/2ANALOG OUTPUT MODULE	ALLEN-BRADLEY, 1762-IF20F2
4	COMPACT POWER SUPPLY, 24-28V DC, 100W, 100/240V AC,/220-375V DC INPUT VOLTAGE	ALLEN-BRADLEY, 1606-XLP100E
5	END ANCHOR, USED W/ STANDARD 35MM DIN RAIL, GRAY	ALLEN-BRADLEY, 1492-EAJ35
6	FINGER-SAFE SINGLE CIRCUIT FUSE BLOCK, NO BLOWN FUSE INDICATOR, #30 - #12 AWG, BLACK	ALLEN-BRADLEY, 1492-H6
7	1/2 A, FAST-ACTING GLASS BODY FUSE, 1/4IN X 1 1/4IN	LITTELFUSE, 0312.500
8	1/32 A, FAST-ACTING GLASS BODY FUSE, 1/4IN X 1 1/4IN	GRAINGER, ICM28
9	2 A, SLO-BLO GLASS BODY FUSE, 1/4IN X 1 1/4 IN	LITTELFUSE, 0313.002
10	END BARRIER SINGLE CIRCUIT FUSE OR ISOLATION BLOCKS, BLACK	ALLEN-BRADLEY, 1492-N37
11	IEC 1-CIRCUIT FEED-THROUGH BLOCK, 4MM² MAX. WIRE, GRAY	ALLEN-BRADLEY, 1492-J4
12	END BARRIER, GRAY	ALLEN-BRADLEY, 1492-EBJ3
13	SURGE/FILTER PROTECTION, DIN RAIL MOUNT, DATALINE UL 497B, 24V DC.	ALLEN-BRADLEY, 4983-DD24
14	DRY CONTACT RELAY KIT	SOLA, RELAYCARD-SDU
15	DIN RAIL TVSS MODULE	SOLA, STV25K10S
16	OCTAL POWER RELAY, 8 PIN / DPDT, 16 AMP RATING, 120 VAC	MAGNECRAFT, 750XBXM4L-120A
17	DIN RAIL MOUNT RELAY SOCKET SCREW TYPE, 8 PIN	IDEC, SR2P-06
18	CENTER JUMPERS	ALLEN-BRADLEY, 1492-CJJ6-10
19	SNAP-IN MARKER CARD, WHITE	ALLEN-BRADLEY, 1492-M6X12
20	GROUND BAR KIT, 10 POSITION #14-4AWG	ELECTRICENTER, ECGB10
21	DIN RAIL 35MM ALUMINUM 1M	IDEC, BNDN-1000
22	PANDUCT TYPE MC METRIC NARROW SLOT WIRING DUCT, GRAY 0.97 X 2.85 IN, 2M	PANDUIT, MC25X75IG2
23	WIRING DUCT COVER, 2M	PANDUIT, C25IG2
24	OUTLET	PHOENIX CONTACT SD-US/SC/LA/GY
25	500 OHM RESISTORS, 1/2 WATT	
26	CAT SE ETHERNET WIRE	
27	PIN TERMINALS - BLUE	PANDUIT, FSD80-8-DSL6
28	PIN TERMINALS - RED	PANDUIT, FS78-8-DSL2
29	PANELVIEW PLUS 6 1000 TERMINAL, TOUCH SCREEN, 10.4-INCH, DC INPUT	ALLEN-BRADLEY, 2711P-T10C4D8
30	MINI-CAS 102V RELAYS FOR PUMP THERMAL/SEAL FAIL PROTECTION	ALLEFLYGT MINI-CAS 120, 14-407129 N-BRADLEY, 1763-L16BWA
31	YELLOW, PILOT LIGHT, LED, 120 VAC	ALLEN-BRADLEY, 800FD-P5N5
32	RED, PILOT LIGHT, LED, 120 VAC	ALLEN-BRADLEY, 800FD-P4N5
33	AMBAR, PILOT LIGHT, LED, 120 VAC	ALLEN-BRADLEY, 800FD-P0N5
34	UWZ SERIES AC HOUR METERS, FLUSH MOUNT, 120 VAC	INTERMATIC, UWZ52E-120U
35	LED SINGLE TUBE LIGHT, 20 WATT	ANY
36	GFI DUAL RECEPTACLE, 20 AMP	HUBBLE
37	750 OCTAL RELAYS, 11 PIN / 3PDT, 16 AMP RATING	MAGNECRAFT, 750XCXM4L
38	RELAY SOCKET 300 VAC 10 AMP TYPE K	SQUARE D, 8501NR62
39	HIM BEZEL, HIGH POWER DRIVES	ALLEN BRADLEY, SK-H9-BZL1
40	30MM SELECTOR SWITCH 3 POSITION, TYPE K, BLACK KNOB	SQUARE D, 9001KS43B/LEGENT PLAT
41	30MM CONTACT BLOCK 1N/O 1N/C	SQUARE D, 9001KA1
42	SELECTOR PADLOCK	SQUARE D, 9001K7
43	PANEL LIGHT SWITCH	SQUARE D, 9001SKS11BH5
44	40MM MUSHROOM HEAD BUTTON, TWO POSITIONS, NON-ILLUMINATED	CUTLER-HAMMER, HT8DBR
45	PRESSURE GAUGE, 6" DIAL, 1/4" PROCESS CONNECTION, RANGE 0-200", PANEL MOUNT WITH FRONT FLANGE.	MCDANIEL CONTROLS, F200" P
46	ANCHOR COUPLING SHORT	
47	THERMOSTAT	INGRAM PRODUCTS, MODEL CTS
48	FORCE MAIN PRESSURE TRANSMITTER	ABB, AB261GS.D.K.B.N.S.1.L.1 261 GS WITH A 1/2-14NPT FEMALE 316LSST
49	LINE REACTOR, 3%	
50	VARIABLE FREQUENCY DRIVE(VFD), RATED FOR 75HP AND FLA OF MOTOR	ALLEN BRADLEY, POWERFLEX 700
51	HVAC, 3000 BTUS	
52	POWER DISTRIBUTION BLOCK	SQUARE D, 9080LBC365208
53	POTABLE WATER PRESSURE TRANSMITTER	WICA, F-20
54	SURGE PROTECTION DEVICE	
55	ISOLATION CONTACTORS	
56	OVERLOAD PROTECTION RELAYS	
57	LIGHTNING ARRESTOR	
	PHASE MONITOR	
58	PRESSURE GAGE	ASHCROFT
59	LEVEL SWITCH(SUSPENDED FLOAT)	ANCHOR SCIENTIFIC INC. ROTOFLOAT
60	PRESSURE TRANSMITTER	WICA F-21
61	LEVEL TRANSMITTER/CONTROLLER	PULSAR BLACKBOX SERIES
62	ULTRASONIC TRANSDUCER	PULSAR DBS60 SERIES
63	STATION ALARM LIGHT	
64	INTRISNIC RELAYS WITH BARRIER	
65	UPS	ALLEN BRADLEY, 1690-B1000N

AMY L. CHAMPAGNE-BAKER, STATE OF FLORIDA, PROFESSIONAL ENGINEER, LICENSE NO. 73735 THIS ITEM HAS BEEN ELECTRONICALLY SIGNED AND SEALED BY **AMY L. CHAMPAGNE-BAKER, P.E.** ON **THE DATE INDICATED HERE** USING A **SHA AUTHENTICATION CODE**. PRINTED COPIES OF THIS DOCUMENT ARE NOT CONSIDERED SIGNED AND SEALED AND THE **SHA AUTHENTICATION CODE** MUST BE VERIFIED ON ANY ELECTRONIC COPIES.

HILLERS ELECTRICAL ENGINEERING, INC.
23257 STATE ROAD 7, SUITE 100
BOCA RATON, FLORIDA 33428
(561) 451-9165
(561) 451-4886 FAX
LICENSE NO: EB 0006877

DATE:	7/3/19	
SCALE:	NONE	
DESIGN BY:	ALC	
DRAWN BY:	DEU	
CHECKED BY:	JWK	
APPROVED BY:	ALC	
DATE:		
BY:		
DESCRIPTION:		

CRAVEN • THOMPSON AND ASSOCIATES, INC.
ENGINEERS • PLANNERS • SURVEYORS
3563 N.W. 53RD STREET, FORT LAUDERDALE, FLORIDA 33309
FAX: (954) 739-6409 TEL.: (954) 739-6400
FLORIDA LICENSED ENGINEERING, SURVEYING & MAPPING BUSINESS No. 271
FLORIDA LICENSED LANDSCAPE ARCHITECTURE BUSINESS No. C000114

MATERIAL SHOWN HEREON IS THE PROPERTY OF CRAVEN THOMPSON & ASSOCIATES, INC. AND SHALL NOT BE REPRODUCED IN WHOLE OR IN PART WITHOUT PERMISSION OF CRAVEN THOMPSON & ASSOCIATES, INC. CRAVEN THOMPSON & ASSOCIATES, INC. COPYRIGHT © 2019

PUMP STATION NO. 8 REPLACEMENT

PREPARED FOR:
CITY OF HALLANDALE BEACH

ELECTRICAL RTU DETAILS

Amy L. Champagne-Baker,PE
Digitally signed by Amy L. Champagne-Baker,PE
Reason: This item has been digitally signed and sealed
Date: 2019.08.06 16:01:05 -04'00'

Amy L. Champagne-Baker
Florida P.E. No. 73735

PROJECT NO.
17-0039-001-02

E-9

SHEET 22 OF 28

E:\PROJECTS\CA\CA81\dwg\100\17-0039-001-01-E08.dwg [E-9] Jul 03, 2019 4:07pm DUROUJO

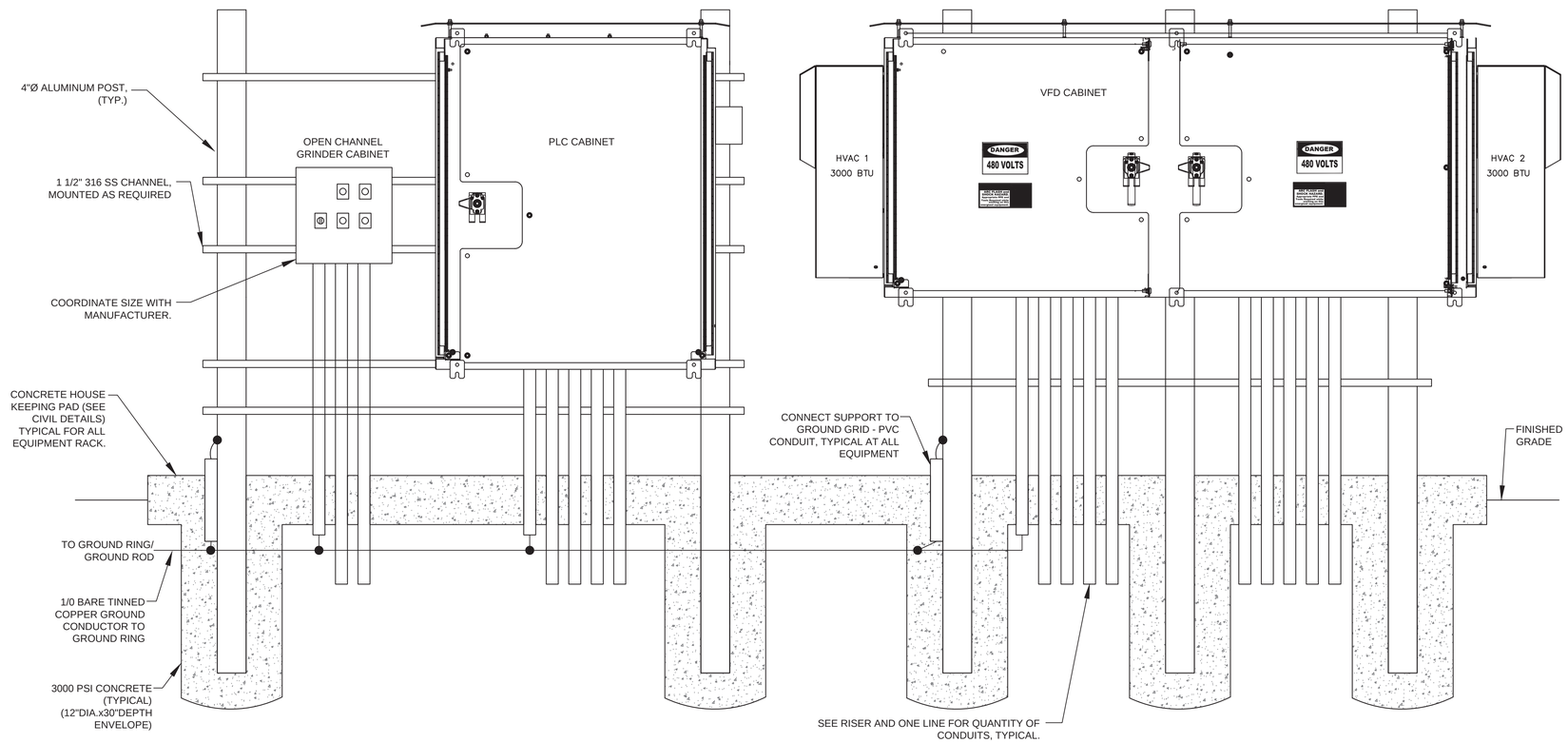

LIFT STATION EQUIPMENT LAYOUT

NOT TO SCALE

NOTE:

ELECTRICAL EQUIPMENT RACK INSTALLATION SHALL MEET FLORIDA BUILDING CODE WIND LOADING REQUIREMENT WITH APPROPRIATE WIND GUST FACTOR FOR THE LOCATION OF INSTALLATION. THE CONTRACTOR SHALL INCLUDE THE SHOP DRAWING SUBMITTAL, A WIND LOADING CALCULATION SIGNED AND SEALED BY A STRUCTURAL ENGINEER REGISTERED IN THE STATE OF FLORIDA SHOWING THAT THE ELECTRICAL EQUIPMENT RACK INSTALLATION WILL MEET THE GIVEN WIND LOADING REQUIREMENT.

MAXIMUM DISTANCE BETWEEN TWO POSTS SHALL BE 5 FEET.

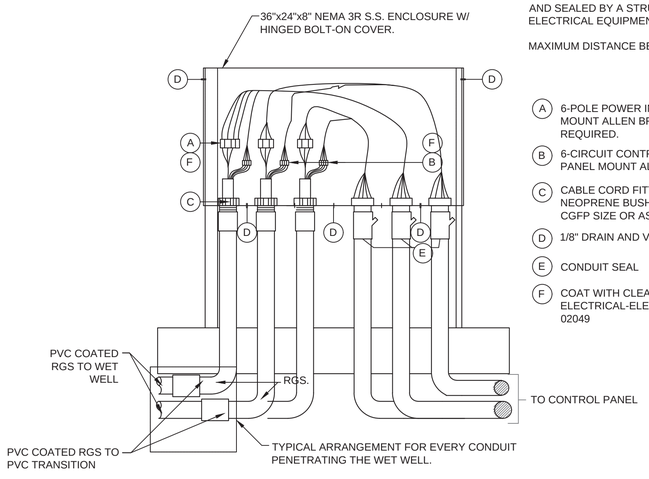

(A) 6-POLE POWER INSULATED TERM BLOCK PANEL MOUNT ALLEN BRADLEY BULLETIN 1492 SIZED AS REQUIRED.

(B) 6-CIRCUIT CONTROL INSULATED TERM BLOCK PANEL MOUNT ALLEN BRADLEY BULLETIN 1492

(C) CABLE CORD FITTING WITH GLAND NUT & NEOPRENE BUSHING EQUAL TO CROUSE HINDS CGFP SIZE OR AS REQUIRED FOR CABLE O.D.

(D) 1/8" DRAIN AND VENTILATION HOLES

(E) CONDUIT SEAL

(F) COAT WITH CLEAR URETHANE SEAL ELECTRICAL-ELECTRONIC INSULATOR AS CRC 'U' 02049

POWER/COMMUNICATION CONNECTION BOX DETAIL

NOT TO SCALE

NOTES:

1. PROVIDE 3/4"Ø CONDUIT FROM BOX TO WET WELL FOR CONTROL WIRING (IF NECESSARY).
2. PROVIDE PADLOCK CAPABLE COVER.

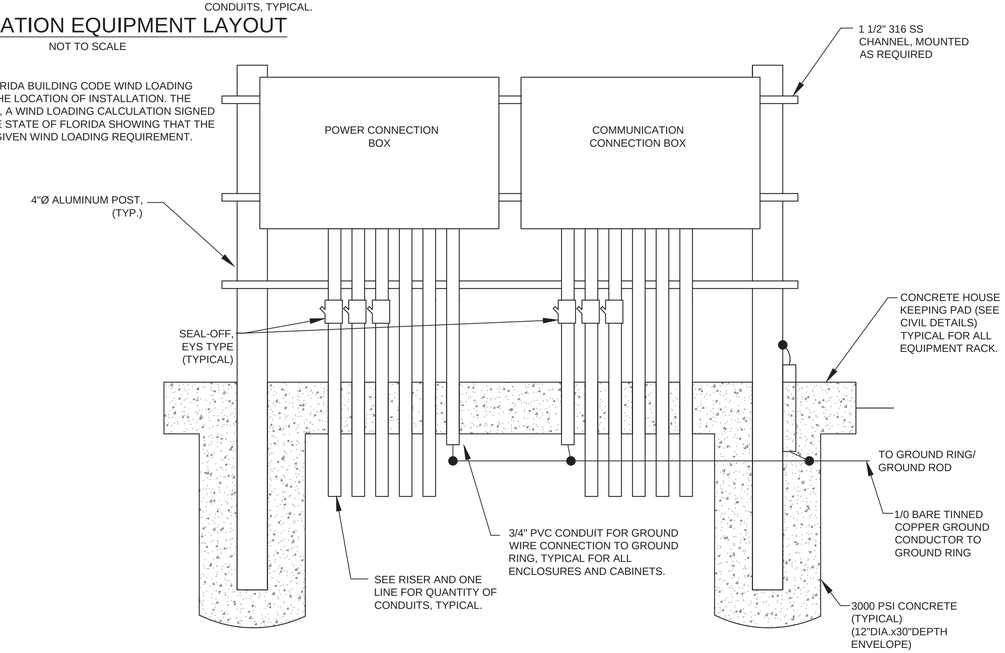

POWER/COMMUNICATION CONNECTION BOX LAYOUT

NOT TO SCALE

AMY L. CHAMPAGNE-BAKER, STATE OF FLORIDA, PROFESSIONAL ENGINEER, LICENSE NO. 73735 THIS ITEM HAS BEEN ELECTRONICALLY SIGNED AND SEALED BY **AMY L. CHAMPAGNE-BAKER, P.E.** ON **THE DATE INDICATED HERE** USING A **SHA AUTHENTICATION CODE**. PRINTED COPIES OF THIS DOCUMENT ARE NOT CONSIDERED SIGNED AND SEALED AND THE **SHA AUTHENTICATION CODE** MUST BE VERIFIED ON ANY ELECTRONIC COPIES.

HILLERS ELECTRICAL ENGINEERING, INC.
23257 STATE ROAD 7, SUITE 100
BOCA RATON, FLORIDA 33428
(561) 451-9165
(561) 451-4886 FAX
LICENSE NO: EB 0006877

DATE:	7/3/19
SCALE:	NONE
DESIGN BY:	ALC
DRAWN BY:	DEU
CHECKED BY:	JWK
APPROVED BY:	ALC

BY:	DATE:	DESCRIPTION:

CRAVEN • THOMPSON AND ASSOCIATES, INC.
ENGINEERS • PLANNERS • SURVEYORS
3563 N.W. 53RD STREET, FORT LAUDERDALE, FLORIDA 33309
FAX: (954) 739-6409 TEL.: (954) 739-6400
FLORIDA LICENSED ENGINEERING, SURVEYING & MAPPING BUSINESS No. 271
FLORIDA LICENSED LANDSCAPE ARCHITECTURE BUSINESS No. C000114

MATERIAL SHOWN HEREON IS THE PROPERTY OF CRAVEN THOMPSON & ASSOCIATES, INC. AND SHALL NOT BE REPRODUCED IN WHOLE OR IN PART WITHOUT PERMISSION OF CRAVEN THOMPSON & ASSOCIATES, INC. CRAVEN THOMPSON & ASSOCIATES, INC. COPYRIGHT © 2019

PUMP STATION NO. 8 REPLACEMENT

PREPARED FOR:
CITY OF HALLANDALE BEACH

ELECTRICAL CONTROL PANEL DETAILS

Amy L. Champagne-Baker,PE
Digitally signed by Amy L. Champagne-Baker,PE
Reason: This item has been digitally signed and sealed
Date: 2019.08.06 16:01:20 -04'00'
Amy L. Champagne-Baker
Florida P.E. No. 73735

PROJECT NO.
17-0039-001-02

E-10

SHEET 23 OF 28

E:\PROJECTS\CA\CA81\dwg\100\17-0039-001-01-E10.dwg [E-10] Jul 03, 2019 4:07pm DUROUJO

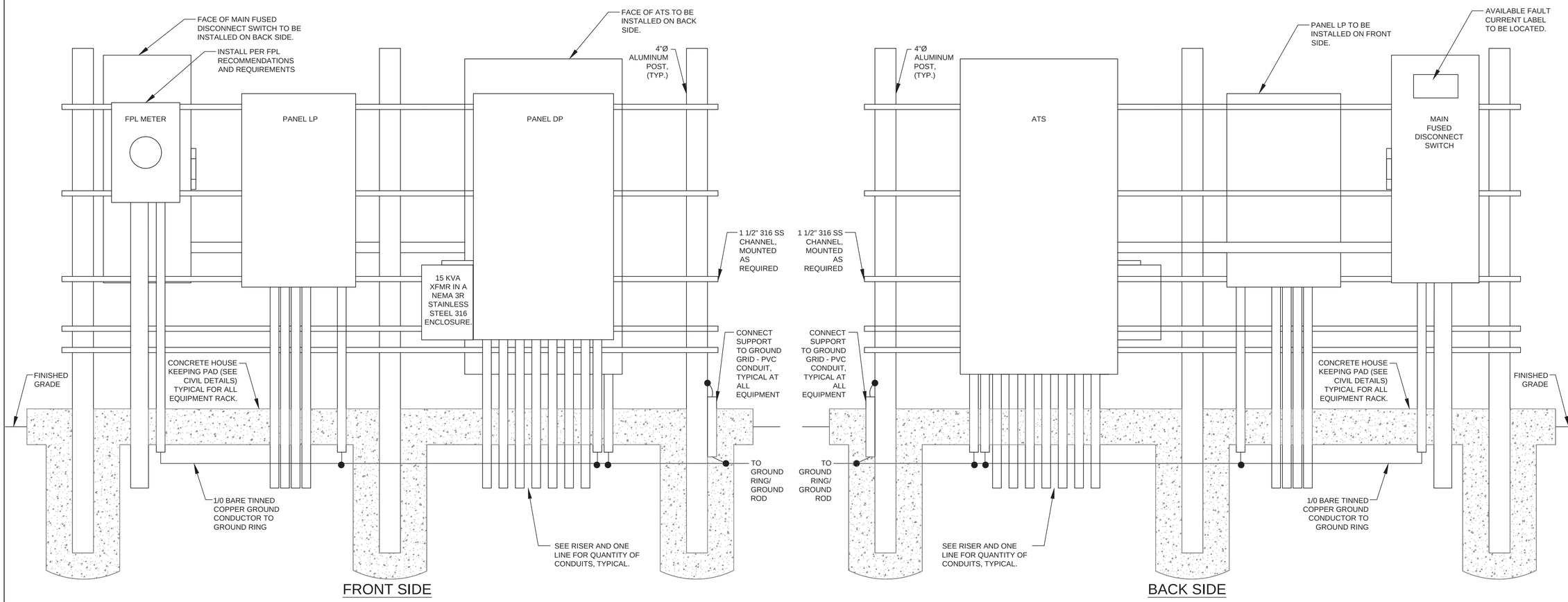

POWER EQUIPMENT LAYOUT

NOT TO SCALE

PANEL LP

BUS AMPS A	BUS AMPS B	CIRCUIT NAME	POLES	AMPS	BUS A	BUS B	AMPS	POLES	CIRCUIT NAME	BUS AMPS A	BUS AMPS B
1		GENERATOR STRIP HEATER	1	20	1	2	30	1	PLC CABINET	15	
	12.5	GENERATOR JACKET WATER HEATER	1	20	3	4	20	1	VFD CABINET		10
6		BATTERY CHARGER	1	20	5	6	20	1	RTU PANEL	5	
	2	ODOR CONTROL DRUM SCRUMMER	1	20	7	8	20	1	SPARE		
7.2		LIGHT POLE	1	20	9	10	20	1	SPARE		
		SPARE	1	20	11	12	20	1	SPARE		
		SPARE	1	20	13	14	20	1	SPARE		
		SPARE	1	20	15	16	20	1	SPARE		
		SPARE	1	20	17	18	20	2	SPD		
		SPARE	1	20	19	20	I	I	I		

TOTAL AMPS: BUS A 34.2 BUS B 24.5 KVA 8.208

RATED VOLTAGE ❒ 120/208 ❒ 277/480 ■ 120/240	Branch Poles ❒12 ■20 ❒24 ❒30			Switchboard: ❒
RATED AMPS ■100 ❒225 ❒400 ❒600	Cabinet: ■Surface ❒Flush			
NEUTRAL BUS ■100% ❒150% ❒200%	■GROUND BUS	■HINGED DOOR	■KEYED DOOR LATCH	LOCATION:
CIRCUIT BREAKER (BOLT IN) BRANCH DEVICES	■SPD	Enclosure Type	❒Nema 1 ■Nema 3R 316 SS ENCLOSURE	❒Nema 4X
❒ MAIN LUGS ONLY	UPSTREAM BREAKER _____AMPS	MAIN 80 AMPS ■BREAKER	❒ _____ TO BE GFI	
PANEL BOARD MUST BE RATED TO INTERRUPT A SHORT CIRCUIT OF 22,000 AMPS SYMETRICAL				
SEE SPECIFICATIONS FOR APPROVED MANUFACTURERS	COPPER BUSSES	MAIN LUGS	SET SIZE:	

NOTE:

ELECTRICAL EQUIPMENT RACK INSTALLATION SHALL MEET FLORIDA BUILDING CODE WIND LOADING REQUIREMENT WITH APPROPRIATE WIND GUST FACTOR FOR THE LOCATION OF INSTALLATION. THE CONTRACTOR SHALL INCLUDE THE SHOP DRAWING SUBMITTAL, A WIND LOADING CALCULATION SIGNED AND SEALED BY A STRUCTURAL ENGINEER REGISTERED IN THE STATE OF FLORIDA SHOWING THAT THE ELECTRICAL EQUIPMENT RACK INSTALLATION WILL MEET THE GIVEN WIND LOADING REQUIREMENT.

MAXIMUM DISTANCE BETWEEN TWO SUPORTS SHALL BE 5 FEET.

AMY L. CHAMPAGNE-BAKER, STATE OF FLORIDA, PROFESSIONAL ENGINEER, LICENSE NO. 73735 THIS ITEM HAS BEEN ELECTRONICALLY SIGNED AND SEALED BY **AMY L. CHAMPAGNE-BAKER, P.E.** ON **THE DATE INDICATED HERE** USING A **SHA AUTHENTICATION CODE**. PRINTED COPIES OF THIS DOCUMENT ARE NOT CONSIDERED SIGNED AND SEALED AND THE **SHA AUTHENTICATION CODE** MUST BE VERIFIED ON ANY ELECTRONIC COPIES.

HILLERS ELECTRICAL ENGINEERING, INC.
23257 STATE ROAD 7, SUITE 100
BOCA RATON, FLORIDA 33428
(561) 451-9165
(561) 451-4886 FAX
LICENSE NO: EB 0006877

DATE:	7/3/19
SCALE:	NONE
DESIGN BY:	ALC
DRAWN BY:	DEU
CHECKED BY:	JWK
APPROVED BY:	ALC
DATE:	
BY:	
DESCRIPTION:	

CRAVEN • THOMPSON AND ASSOCIATES, INC.
ENGINEERS • PLANNERS • SURVEYORS
3563 N.W. 53RD STREET, FORT LAUDERDALE, FLORIDA 33309
FAX: (954) 739-6409 TEL.: (954) 739-6400
FLORIDA LICENSED ENGINEERING, SURVEYING & MAPPING BUSINESS No. 271
FLORIDA LICENSED LANDSCAPE ARCHITECTURE BUSINESS No. C000114

MATERIAL SHOWN HEREON IS THE PROPERTY OF CRAVEN THOMPSON & ASSOCIATES, INC. AND SHALL NOT BE REPRODUCED IN WHOLE OR IN PART, WITHOUT PERMISSION OF CRAVEN THOMPSON & ASSOCIATES, INC. CRAVEN THOMPSON & ASSOCIATES, INC. COPYRIGHT © 2019

PUMP STATION NO. 8 REPLACEMENT

PREPARED FOR: CITY OF HALLANDALE BEACH

ELECTRICAL POWER PEDESTAL DETAIL

Amy L. Champagne-Baker,PE

Digitally signed by Amy L. Champagne-Baker,PE
Reason: This item has been digitally signed and sealed
Date: 2019.08.06 16:01:38 -04'00'

Amy L. Champagne-Baker
Florida P.E. No. 73735

PROJECT NO.
17-0039-001-02

E-11

SHEET 24 OF 28

E:\PROJECTS\CA\CA81\dwg\100\17-0039-001-01-E10.dwg [E-11] Jul 03, 2019 4:07pm DURQUJO

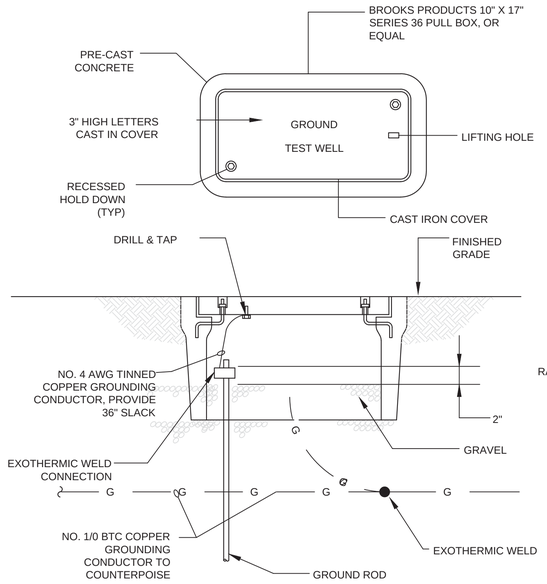

GROUND TEST WELL

NOT TO SCALE

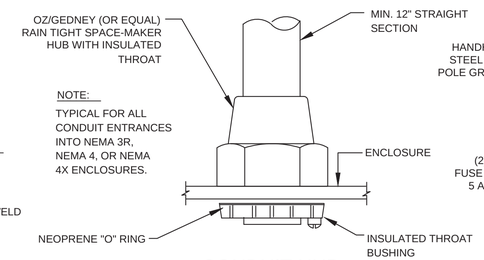

CONDUIT HUB

NOT TO SCALE

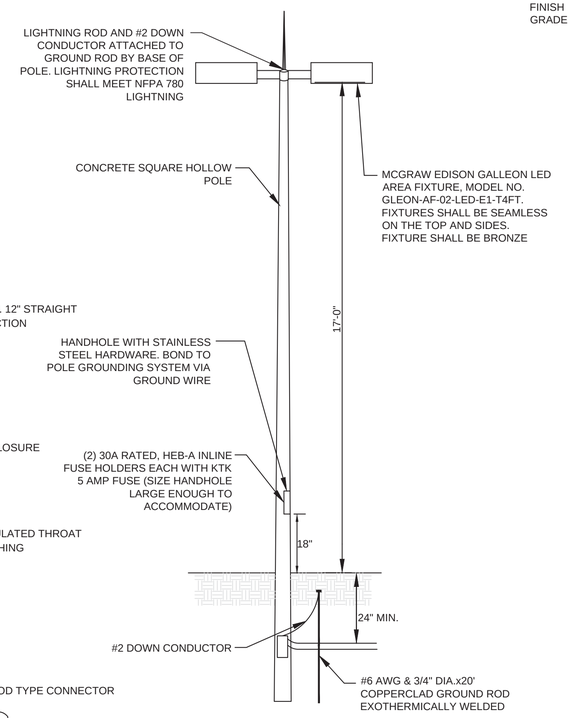

SITE LIGHTING FIXTURE AND POLE DETAIL

NOT TO SCALE

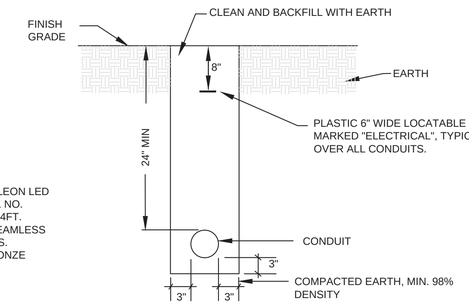

SINGLE CONDUIT IN EARTH

NOT TO SCALE

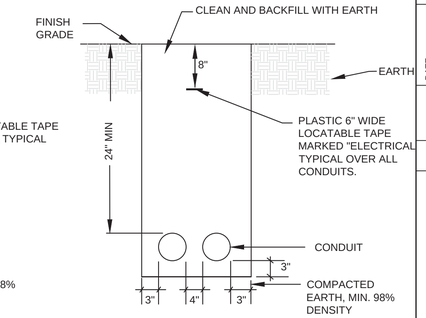

MULTIPLE CONDUIT IN EARTH

NOT TO SCALE

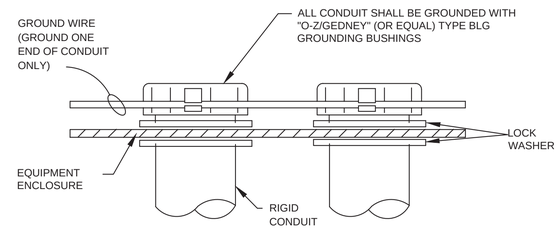

CONDUIT GROUNDING

NOT TO SCALE

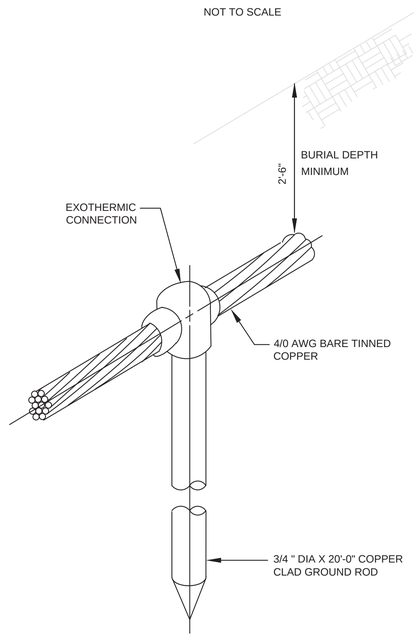

GROUND ROD DETAIL

NOT TO SCALE

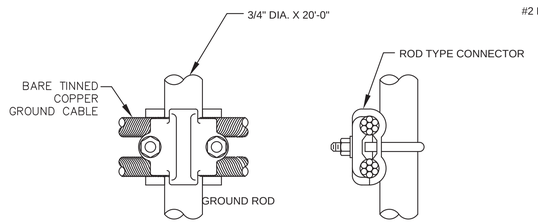

CABLE TO ROD CONNECTION

NOT TO SCALE

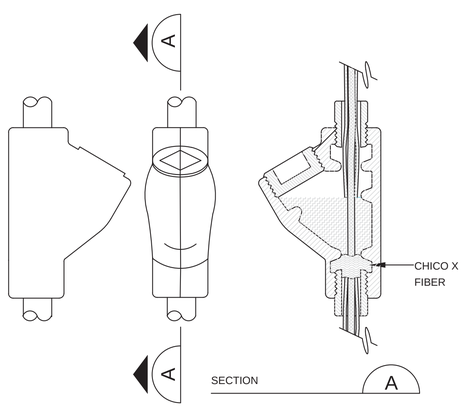

CONDUIT SEAL OFF (SPLIT TYPE)

NOT TO SCALE

NOTE: PROVIDE CONDUIT SEAL OFF FOR ALL CONDUITS LEAVING WETWELL.

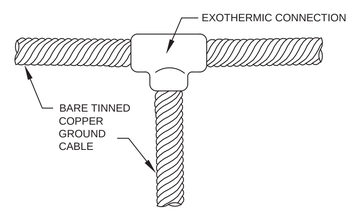

GROUND CABLE CONNECTION

NOT TO SCALE

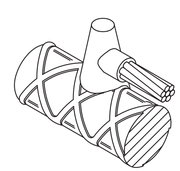

HORIZONTAL COPPER CONDUCTOR TAP TO HORIZONTAL REINFORCING BAR (REBAR). MAXIMUM CONDUCTOR SIZE IS 4/0 AWG. REBAR CHARACTERISTICS AND LOCATION OF WELD MUST BE CONSIDERED WHEN SELECTING CONNECTIONS TO REBAR. WHEN POSSIBLE, CONNECTIONS SHOULD BE MADE CLOSE TO THE END OF THE REBAR.

GROUND CABLE EXOTHERMIC WELD TO REBAR

NOT TO SCALE

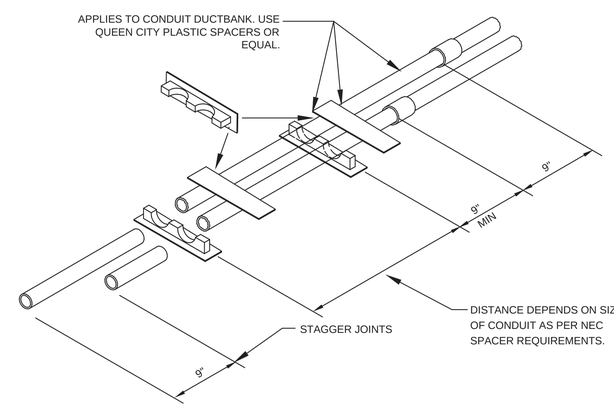

HORIZONTAL STAGGERING OF SPACERS AND JOINTS

NOT TO SCALE

AMY L. CHAMPAGNE-BAKER, STATE OF FLORIDA, PROFESSIONAL ENGINEER, LICENSE NO. 73735 THIS ITEM HAS BEEN ELECTRONICALLY SIGNED AND SEALED BY **AMY L. CHAMPAGNE-BAKER, P.E.** ON **THE DATE INDICATED HERE** USING A **SHA AUTHENTICATION CODE**. PRINTED COPIES OF THIS DOCUMENT ARE NOT CONSIDERED SIGNED AND SEALED AND THE **SHA AUTHENTICATION CODE** MUST BE VERIFIED ON ANY ELECTRONIC COPIES.

HILLERS ELECTRICAL ENGINEERING, INC.
23257 STATE ROAD 7, SUITE 100
BOCA RATON, FLORIDA 33428
(561) 451-9165
(561) 451-4886 FAX
LICENSE NO: EB 0006877

DATE:	7/3/19
SCALE:	NONE
DESIGN BY:	ALC
DRAWN BY:	DEU
CHECKED BY:	JWK
APPROVED BY:	ALC

DATE:	BY:	DESCRIPTION:

CRAVEN • THOMPSON AND ASSOCIATES, INC.
ENGINEERS • PLANNERS • SURVEYORS
3563 N.W. 53RD STREET, FORT LAUDERDALE, FLORIDA 33309
FAX: (954) 739-6409 TEL.: (954) 739-6400
FLORIDA LICENSED ENGINEERING, SURVEYING & MAPPING BUSINESS No. 271
FLORIDA LICENSED LANDSCAPE ARCHITECTURE BUSINESS No. C000114

MATERIAL SHOWN HEREON IS THE PROPERTY OF CRAVEN THOMPSON & ASSOCIATES, INC. AND SHALL NOT BE REPRODUCED IN WHOLE OR IN PART, WITHOUT PERMISSION OF CRAVEN THOMPSON & ASSOCIATES, INC. CRAVEN THOMPSON & ASSOCIATES, INC. ©2019

PUMP STATION NO. 8 REPLACEMENT

PREPARED FOR:
CITY OF HALLANDALE BEACH

ELECTRICAL DETAILS

Amy L. Champagne-Baker,PE

Digitally signed by Amy L. Champagne-Baker,PE
Reason: This item has been digitally signed and sealed
Date: 2019.08.06 16:01:54 -04'00'

Amy L. Champagne-Baker
Florida P.E. No. 73735

PROJECT NO.
17-0039-001-02

E-12

SHEET 25 OF 28

E:\PROJECTS\CA\CA81\dwg\100\17-0039-001-01-E12.dwg [E-12] Jul 03, 2019 4:07pm DURQUJO

INSTRUMENTATION LEGEND

INSTRUMENT SOCIETY OF AMERICA TABLE

LETTER	FIRST LETTER: PROCESS OR INITIATING VARIABLE	FIRST LETTER: MODIFIER	SUCCEEDING LETTERS: READOUT OR PASSIVE FUNCTION	SUCCEEDING LETTERS: OUTPUT FUNCTION	SUCCEEDING LETTERS: MODIFIER
A	ANALYSIS (*)		ALARM		USERS CHOICE (*)
B	BURNER FLAME		USERS CHOICE (*)	USERS CHOICE (*)	
C	CONDUCTIVITY			CONTROL	CLOSE
D	DENSITY (S.G.)	DIFFERENTIAL			
E	VOLTAGE		PRIMARY ELEMENT		
F	FLOW RATE	RATIO			
G	GAUGE		GLASS	GATE	
H	HAND (MANUAL)				HIGH
I	CURRENT		INDICATE		
J	POWER	SCAN			
K	TIME OR SCHEDULE			CONTROL STATION	
L	LEVEL		LIGHT (PILOT)		LOW
M	MOTION				MIDDLE
N	STROKE		USERS CHOICE (*)	USERS CHOICE (*)	NORMAL
O	LOOP VEH. DETECTOR		OFFICE		OPEN
P	PRESSURE OR VACUUM		POINT (TEST CONNECTION)		
Q	QUANTITY OR EVENT		INTEGRATE		
R	RATIO		RECORD OR PRINT		
S	SPEED OR FREQUENCY	SAFETY		SWITCH	
T	TEMPERATURE			TRANSMIT	
U	MULTIVARIABLE (*)		MULTIFUNCTION (*)		
V	VIBRATION			VALVE	
W	WEIGHT OR FORCE		WELL		
X	UNCLASSIFIED (*)		UNCLASSIFIED (*)	UNCLASSIFIED (*)	UNCLASSIFIED (*)
Y	PHOTO CELL		LIGHT SOURCE	RELAY OR COMPUTE (*)	
Z	POSITION			DRIVE, ACTUATE OR UNCLASSIFIED FINAL CONTROL ELEMENT	

(*) WHEN USED, EXPLANATION IS SHOWN ADJACENT TO INSTRUMENT SYMBOL

INSTRUMENT IDENTIFICATION

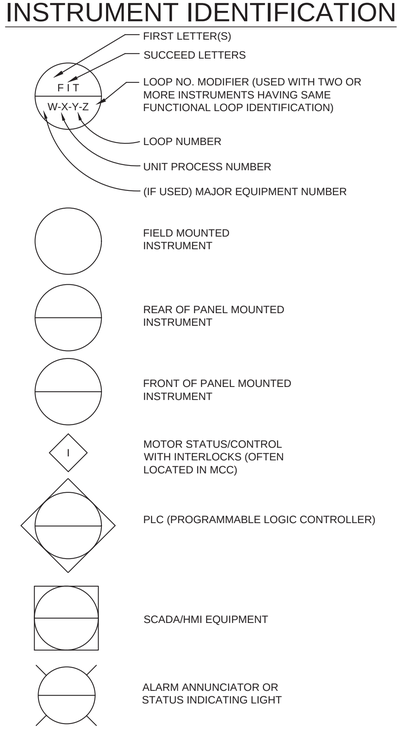

NOTES:

1. COMPONENTS AND PANELS SHOWN WITH A DIAMOND (◆) ARE TO BE PROVIDED UNDER SECTION "INSTRUMENTATION & CONTROLS".
2. COMPONENTS AND PANELS SHOWN WITH A DOUBLE ASTERISK (**) ARE TO BE PROVIDED AS PART OF A PACKAGED OR MECHANICAL SYSTEM.
3. COMPONENTS AND PANELS SHOWN WITH A TRIANGLE (▲) ARE EXISTING. COMPONENTS AND PANELS WHICH HAVE NO SYMBOL ATTACHED TO IT ARE EXISTING.
4. COMPONENTS AND PANELS SHOWN WITH A HEXAGON (⬢) ARE EXISTING TO BE MODIFIED AND/OR RELOCATED.
5. COMPONENTS AND PANELS SHOWN WITH A SQUARE (■) ARE FUTURE.
6. DURING SHOP DRAWING PREPARATION, THE CONTRACTOR SHALL FIELD VERIFY ALL THE EXISTING ANALOG AND DISCRETE POINTS FOR DETAILED INTERFACE AND INCLUDE IT AS PART OF SUBMITTAL.
7. THE SINGLE INSTRUMENT & CONTROL SUPPLIER SHALL HAVE A U.L. APPROVED SHOP.
8. ALL PROCESS TUBING AND ISOLATION VALVES SHALL BE 1/4"- 316 S.S., UNLESS OTHERWISE NOTED.
9. ALL CONTROL PANELS SHALL BE FURNISHED AND INSTALLED WITH A 1P-15A CIRCUIT BREAKER, UNLESS OTHERWISE NOTED.
10. SEE MECHANICAL PLANS AND SPECIFICATIONS FOR EQUIPMENT NUMBERS.

INSTRUMENT LINE SYMBOLS

- PRIMARY PROCESS FLOW
- FUTURE PRIMARY PROCESS FLOW
- SECONDARY PROCESS FLOW, CONNECTION TO PROCESS FLOW, MECHANICAL LINK OR INSTRUMENT SUPPLY
- ELECTRICAL SIGNAL (DISCRETE)
- A — ELECTRICAL SIGNAL (ANALOG)
- PNEUMATIC SIGNAL
- FIBER OPTIC
- X — PROCESS OR SIGNAL CONTINUED SOMEWHERE ELSE (X=1,2,3,...)

AMY L. CHAMPAGNE-BAKER, STATE OF FLORIDA, PROFESSIONAL ENGINEER, LICENSE NO. 73735 THIS ITEM HAS BEEN ELECTRONICALLY SIGNED AND SEALED BY **AMY L. CHAMPAGNE-BAKER, P.E.** ON **THE DATE INDICATED HERE** USING A **SHA AUTHENTICATION CODE**. PRINTED COPIES OF THIS DOCUMENT ARE NOT CONSIDERED SIGNED AND SEALED AND THE **SHA AUTHENTICATION CODE** MUST BE VERIFIED ON ANY ELECTRONIC COPIES.

INSTRUMENT ABBREVIATION

ACC	ACCELATOR
BFP	BELT FILTER PRESS
CL2	CHLORINE
CLW	CLEARWELL
COM	COMMON
COND	CONDUCTIVITY
CP	CONTROL PANEL
DI, AI	DISCRETE INPUT, ANALOG INPUT
DO, AO	DISCRETE OUTPUT, ANALOG OUTPUT
D.O.	DISSOLVED OXYGEN
DR	DISTANCE RELAY
EFFL	EFFLUENT
EP	ELECTRICAL PANEL
ES	EMERGENCY STOP
ETM	ELAPSED TIME METER
FD	CHEMICAL FEEDER
FIL	FILTER
GEN	GENERATOR
HLO	HIGH-LOW-OFF
HLOR	HIGH-LOW-OFF-REMOTE
HOA	HAND-OFF-AUTO
HOR	HAND-OFF-REMOTE
HOTC	HAND-OFF-TIMER-COMPUTER
H/L	HIGH/LOW
HSP	HIGH SERVICE PUMP
INFL	INFLUENT
JP	JOCKEY PUMP
LOS	LOCK-OUT-STOP
LPU	LINE PROTECTION UNIT
MCC	MOTOR CONTROL CENTER
MCP	MAIN CONTROL PANEL
ME	MISCELLANEOUS EQUIPMENT
M.G.	MILLION GALLON
MOV	MOTOR OPERATED VALVE
OCA	OPEN-CLOSE-AUTO
OC	OPEN-CLOSE
OO	ON-OFF
ORP	OXIDATION REDUCTION POTENTIAL
OSC	OPEN-STOP-CLOSE
OSCR	OPEN-STOP-CLOSE-REMOTE
PH	HYDROGEN ION CONCENTRATION
PRES	PRESSURE
RES	RESTORE
RF	RF (ADMITTANCE) LEVEL MONITOR
RIP, RIO	REMOTE I/O PANEL
R/L	REMOTE/LOCAL
RSP	REMOTE SETPOINT
SA	SURGE ARRESTER
SEC	SECONDARY
SL	SLAKER
SF	SONIC FLOWMETER
SP	SETPOINT
SS	START/STOP
ST	STEP
STOR	STORAGE
SUS	SUSPENDED SOLIDS
SSRVS	SOLID STATE REDUCED VOLTAGE STARTER
TD	THERMAL DISPERSION
TP	TRANSFER PUMP
TURB	TURBIDITY
VFD	VARIABLE FREQUENCY DRIVE

PUMPS & COMPRESSORS

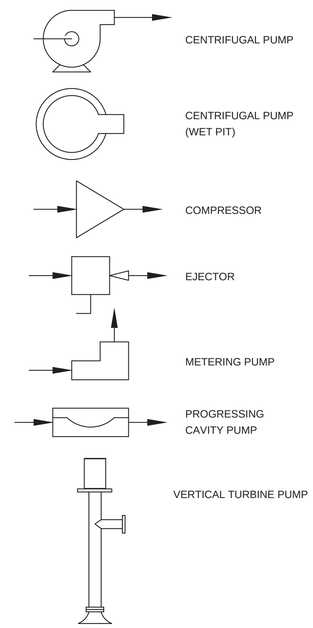

VALVES & GATES

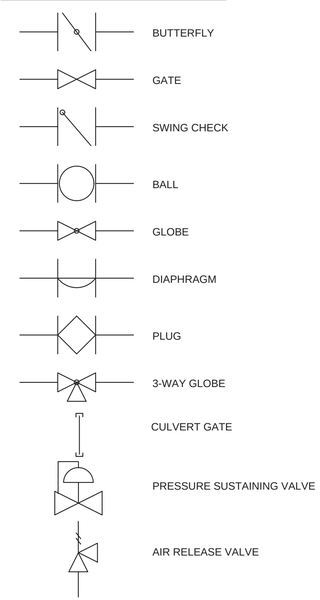

ACTUATOR OR OPERATORS

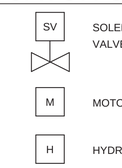

PRIMARY ELEMENTS

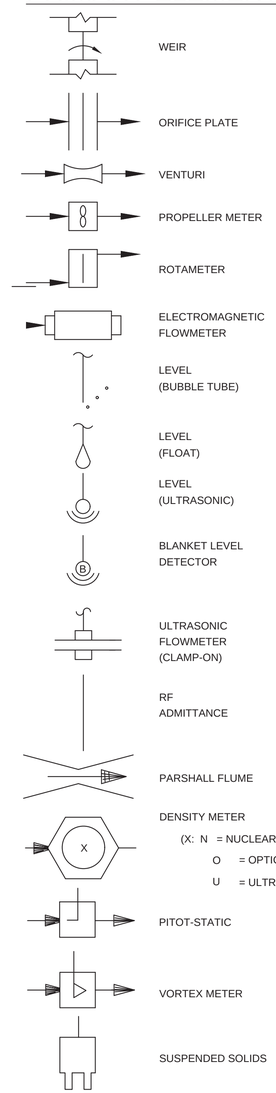

HILLERS ELECTRICAL ENGINEERING, INC.
23257 STATE ROAD 7, SUITE 100
BOCA RATON, FLORIDA 33428
(561) 451-9165
(561) 451-4886 FAX
LICENSE NO: EB 0006877

DATE:	7/3/19
SCALE:	NONE
DESIGN BY:	ALC
DRAWN BY:	DEU
CHECKED BY:	JWK
APPROVED BY:	ALC

DESCRIPTION:	BY:	DATE:

CRAVEN • THOMPSON AND ASSOCIATES, INC.
ENGINEERS • PLANNERS • SURVEYORS
3563 N.W. 53RD STREET, FORT LAUDERDALE, FLORIDA 33309
FAX: (954) 739-6409 TEL.: (954) 739-6400
FLORIDA LICENSED ENGINEERING, SURVEYING & MAPPING BUSINESS No. 271
FLORIDA LICENSED LANDSCAPE ARCHITECTURE BUSINESS No. C000114

MATERIAL SHOWN HEREON IS THE PROPERTY OF CRAVEN THOMPSON & ASSOCIATES, INC. AND SHALL NOT BE REPRODUCED IN WHOLE OR IN PART, WITHOUT PERMISSION OF CRAVEN THOMPSON & ASSOCIATES, INC. CRAVEN THOMPSON & ASSOCIATES, INC. ARCHITECTS ENGINEERS LANDSCAPE ARCHITECTS PLANNERS SURVEYORS © 2009

PUMP STATION NO. 8 REPLACEMENT

PREPARED FOR:
CITY OF HALLANDALE BEACH

P&ID LEGEND AND NOTES

Amy L. Champagne-Baker,PE
Digitally signed by Amy L. Champagne-Baker,PE
Reason: This item has been digitally signed and sealed
Date: 2019.08.06 16:02:19 -04'00'
Amy L. Champagne-Baker
Florida P.E. No. 73735

PROJECT NO.
17-0039-001-02

I-1

SHEET 26 OF 28

E:\PROJECTS\CA\CA81\dwg\100\17-0039-001-01-I01.dwg [I-1] Jul 03, 2019 4:06pm DURQUJO

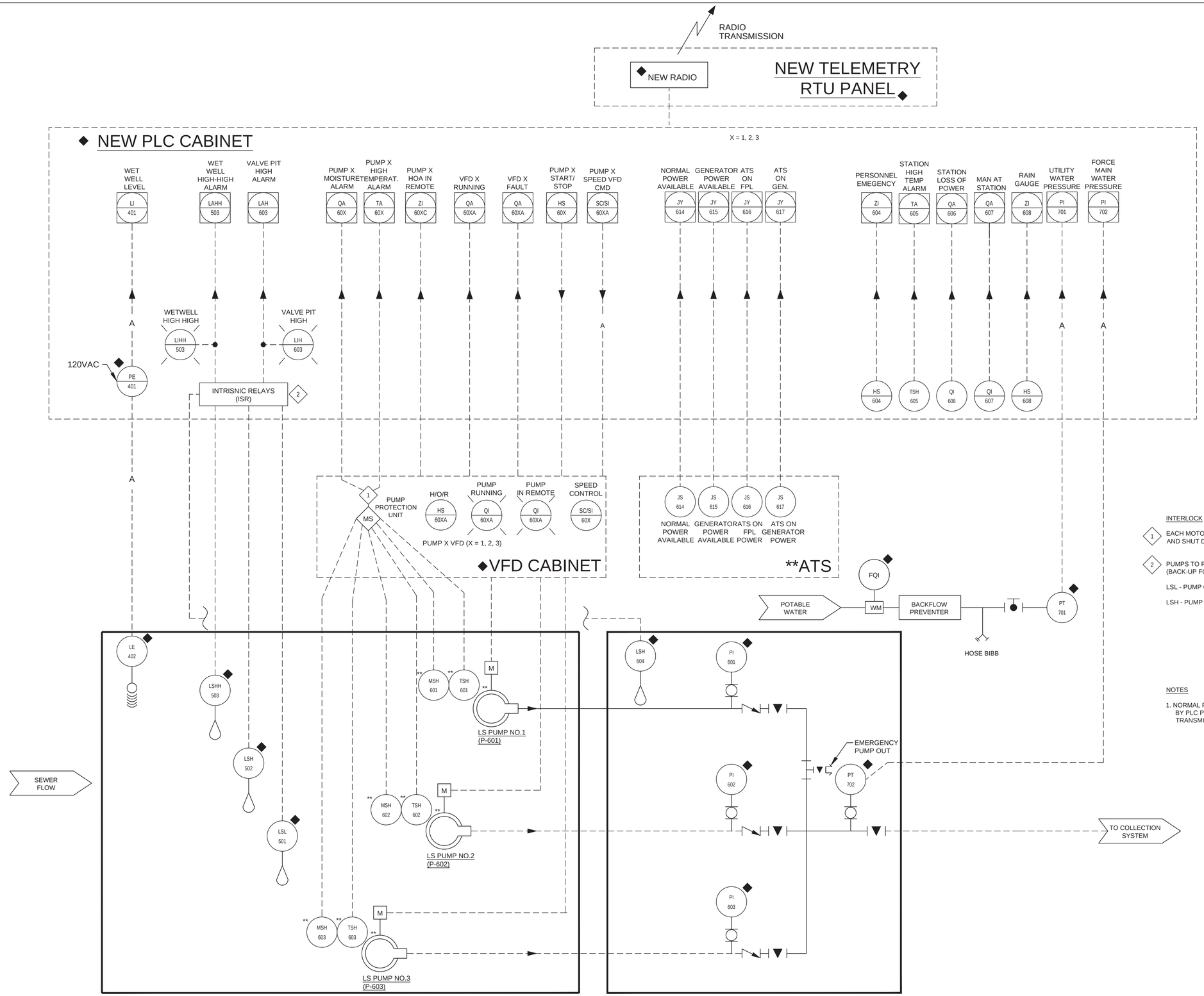

INTERLOCK

1. EACH MOTOR TEMPERATURE AND MOISTURE SENSOR TO ALARM AND SHUT DOWN EACH ASSOCIATED VFD (HARDWIRED).
2. PUMPS TO RUN BASED ON WATER LEVEL FLOATS FOR BACK-UP. (BACK-UP FOR NORMAL PLC CONTROL):

   LSL - PUMP OFF

   LSH - PUMP RUN

NOTES

1. NORMAL PUMP START-STOP CONTROL BY PLC PROGRAM BASED ON LEVEL TRANSMITTER SIGNAL.

AMY L. CHAMPAGNE-BAKER, STATE OF FLORIDA, PROFESSIONAL ENGINEER, LICENSE NO. 73735 THIS ITEM HAS BEEN ELECTRONICALLY SIGNED AND SEALED BY **AMY L. CHAMPAGNE-BAKER, P.E.** ON **THE DATE INDICATED HERE** USING A **SHA AUTHENTICATION CODE**. PRINTED COPIES OF THIS DOCUMENT ARE NOT CONSIDERED SIGNED AND SEALED AND THE **SHA AUTHENTICATION CODE** MUST BE VERIFIED ON ANY ELECTRONIC COPIES.

HILLERS ELECTRICAL ENGINEERING, INC.
23257 STATE ROAD 7, SUITE 100
BOCA RATON, FLORIDA 33428
(561) 451-9165
(561) 451-4886 FAX
LICENSE NO: EB 0006877

DATE:	7/3/19
SCALE:	NONE
DESIGN BY:	ALC
DRAWN BY:	DEU
CHECKED BY:	JWK
APPROVED BY:	ALC

DESCRIPTION:	BY:	DATE:

CRAVEN • THOMPSON AND ASSOCIATES, INC.
ENGINEERS • PLANNERS • SURVEYORS
3563 N.W. 53RD STREET, FORT LAUDERDALE, FLORIDA 33309
FAX: (954) 739-6409 TEL.: (954) 739-6400
FLORIDA LICENSED ENGINEERING, SURVEYING & MAPPING BUSINESS No. 271
FLORIDA LICENSED LANDSCAPE ARCHITECTURE BUSINESS No. C000114

MATERIAL SHOWN HEREON IS THE PROPERTY OF CRAVEN THOMPSON & ASSOCIATES, INC. AND SHALL NOT BE REPRODUCED IN WHOLE OR IN PART WITHOUT PERMISSION OF CRAVEN THOMPSON & ASSOCIATES, INC. © 2019

PUMP STATION NO. 8 REPLACEMENT

PREPARED FOR:
CITY OF HALLANDALE BEACH

P&ID

Amy L. Champagne-Baker
Florida P.E. No. 73735

PROJECT NO.
17-0039-001-02

I-2

SHEET 27 OF 28

E:\PROJECTS\CA\CA81\dwg\100\17-0039-001-01-I01.dwg [I-2] Jul 03, 2019 4:06pm DUROUJO

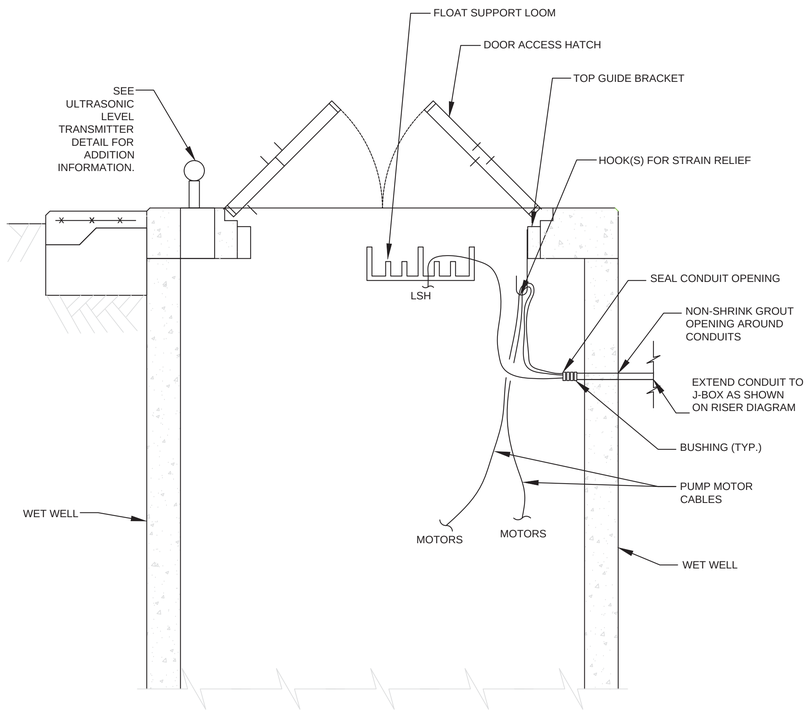

NOTES:

1. RIGID CONDUITS SHALL BE STUBBED INTO WALL OF WET WELL 24" MIN. BELOW GROUND LEVEL TO PROVIDE ACCESS TO CABLES AND CONTROL WIRING.
2. THE HOLE IN THE WET WELL WALL FOR CONDUIT STUBS SHALL BE SIZED AND BORED FOR THE CONDUIT TO FIT. THE HOLE SHALL BE GROUTED.
3. WHEN CONDUIT STUB IS 12" OR OVER IN LENGTH, THE STUB SHALL BE SUPPORTED BY HANGERS.
4. THE STUBS INSIDE THE WET WELL SHALL BE BROUGHT OUT TO THE HATCH OPENING TO ALLOW CABLES TO BE INSTALLED FROM GRADE WITHOUT ENTERING THE WET WELL. STUBS SHALL NOT PROTRUDE OR INTERFERE WITH THE CLEARANCE OF THE ACCESS HATCH'S OPENING AND FALL THROUGH PREVENTION GRATE SYSTEM, NOR HINDER THE REMOVAL OF THE PUMPS.
5. ALL CABLES SHALL HAVE A STRAIN RELEASE CLAMP FIXED TO THE WET WELL STRUCTURE WITH HANGERS. HEAVY DUTY STAINLESS STEEL BRAIDED SLEEVE FOR ALL PUMP CABLES.
6. FLOAT SWITCH CABLES SHALL BE INSTALLED IN THE SAME WAY AS THE PUMP CABLES ARE INSTALLED. FLOATS SHALL HAVE EXTERNAL WEIGHTS.
7. FILL CONDUITS FROM WET WELL WITH SEALING PUTTY.
8. SPARE CONDUIT INTO WET WELL SHALL BE CAPPED.
9. WRAP CABLE FOR LEVEL TRANSDUCER AROUND WET WELL WALL OPENING TO THE LEVEL TRANSDUCER.
10. DRAWING IS REPRESENTATIVE OF EQUIPMENT IN WET WELL. COORDINATE LOCATION OF LOOMS (HOOKS), LEVEL TRANSDUCER, AND CABLES WITH FALL THROUGH PREVENTION GRATE SYSTEM.

WET WELL LEVEL, FLOATS, AND CABLE INSTALLATION DETAIL

NOT TO SCALE

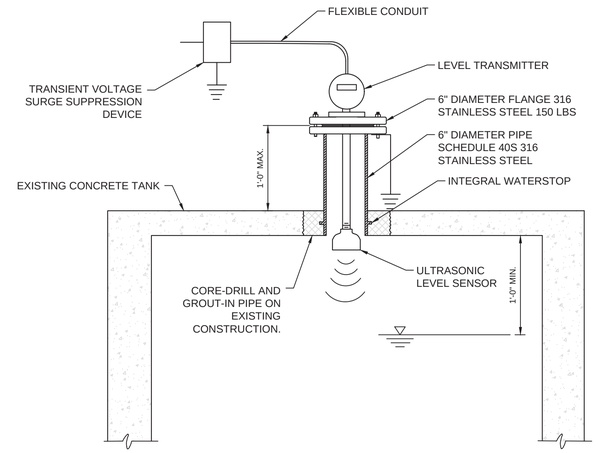

ULTRASONIC LEVEL TRANSMITTER-FLANGE MOUNT IN CONCRETE STRUCTURE

NOT TO SCALE

NOTES:

1. COORDINATE LIMIT SWITCH INSTALLATION WITH HATCH SUPPLIER FOR LIMIT SWITCH ANCHORING PROCEDURE. ALL MOUNTING HARDWARE SHALL BE TYPE 316 STAINLESS STEEL.

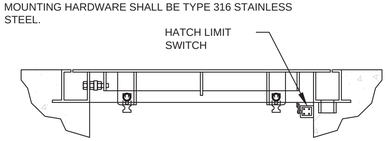

HATCH LIMIT SWITCH

NOT TO SCALE

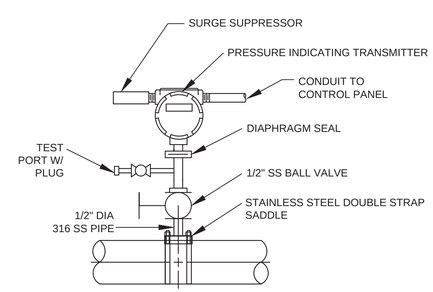

PRESSURE TRANSMITTER INSTALLATION

NOT TO SCALE

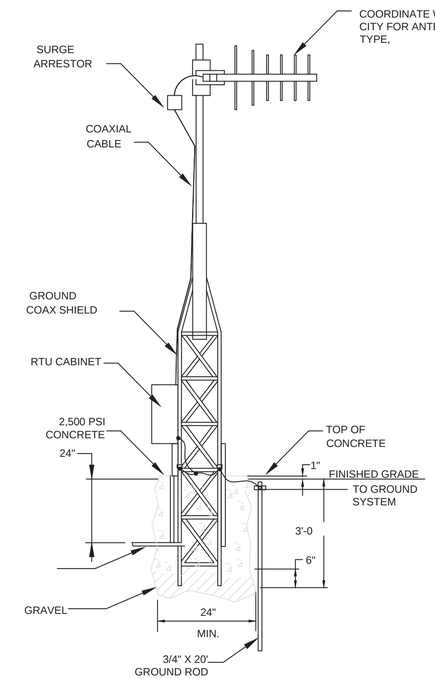

RADIO ANTENNA MOUNTING DETAIL

NOT TO SCALE

ANTENNA NOTES:

1. GRAVEL SHOULD EXTEND 6" BELOW BOTTOM OF TOWER BASE.
2. COAX CONNECTORS SHOULD BE WRAPPED IN ALPHA HEAT SHRINK FIT-321-1INCH.
3. A SERVICE LOOP SHOULD BE LEFT IN THE COAX CABLE AT THE TOP OF THE TOWER SECTION TO ALLOW FOR ANTENNA ROTATION.
4. ANTENNA HEIGHT SHALL BE DETERMINED BY THE RADIO SURVEY. FINAL CONCRETE BASE SIZE TO BE ADJUSTED AS REQUIRED BY FINAL ANTENNA HEIGHT (MIN. 12 FEET).
5. MAST & METAL STRUCTURE SHALL BE GROUNDED IN ACCORDANCE WITH N.E.C. SECTION 810-21.
6. ALL POLE INSTALLATIONS SHALL BE SUITABLE FOR WIND LOADING AND APPROPRIATE GUST FACTOR PER APPLICABLE ZONE OF INSTALLATION AS DEFINED IN THE FLORIDA BUILDING CODE. THE CONTRACTOR SHALL INCLUDE WITH THE SHOP DRAWING SUBMITTAL, A MAST WIND LOADING CALCULATION SIGNED & SEALED BY A STRUCTURAL ENGINEER REGISTERED IN THE STATE OF FLORIDA SHOWING THAT THE PROPOSED MAST AND FOUNDATION WILL MEET THE GIVEN WIND LOADING REQUIREMENT.
7. SEE ELECTRICAL DRAWINGS FOR LIGHTNING PROTECTION REQUIREMENTS AND GROUNDING SPECIFICATIONS/INSTRUCTIONS.
8. INSTALL GROUND CLAMP ON EACH LEG AND INTERCONNECT WITH #4/0 BARE COPPER GROUNDING CONDUCTOR.

AMY L. CHAMPAGNE-BAKER, STATE OF FLORIDA, PROFESSIONAL ENGINEER, LICENSE NO. 73735 THIS ITEM HAS BEEN ELECTRONICALLY SIGNED AND SEALED BY **AMY L. CHAMPAGNE-BAKER, P.E.** ON **THE DATE INDICATED HERE** USING A **SHA AUTHENTICATION CODE**. PRINTED COPIES OF THIS DOCUMENT ARE NOT CONSIDERED SIGNED AND SEALED AND THE **SHA AUTHENTICATION CODE** MUST BE VERIFIED ON ANY ELECTRONIC COPIES.

HILLERS ELECTRICAL ENGINEERING, INC.
23257 STATE ROAD 7, SUITE 100
BOCA RATON, FLORIDA 33428
(561) 451-9165
(561) 451-4886 FAX
LICENSE NO: EB 0006877

DATE:	7/3/19
SCALE:	NONE
DESIGN BY:	ALC
DRAWN BY:	DEU
CHECKED BY:	JWK
APPROVED BY:	ALC

DATE:	BY:	DESCRIPTION:

CRAVEN • THOMPSON AND ASSOCIATES, INC.
ENGINEERS • PLANNERS • SURVEYORS
3563 N.W. 53RD STREET, FORT LAUDERDALE, FLORIDA 33309
TEL.: (954) 739-6400
FAX: (954) 739-6409
FLORIDA LICENSED ENGINEERING, SURVEYING & MAPPING BUSINESS No. 271
FLORIDA LICENSED LANDSCAPE ARCHITECTURE BUSINESS No. C000114

MATERIAL SHOWN HEREON IS THE PROPERTY OF CRAVEN THOMPSON & ASSOCIATES, INC. AND SHALL NOT BE REPRODUCED IN WHOLE OR IN PART, WITHOUT PERMISSION OF CRAVEN THOMPSON & ASSOCIATES, INC. CRAVEN THOMPSON & ASSOCIATES, INC. COPYRIGHT © 2019

PUMP STATION NO. 8 REPLACEMENT

PREPARED FOR: CITY OF HALLANDALE BEACH

P&ID DETAILS

Amy L. Champagne-Baker
Florida P.E. No. 73735

PROJECT NO. 17-0039-001-02

I-3

SHEET 28 OF 28

E:\PROJECTS\CA\CA81\dwg\100\17-0039-001-01-I01.dwg [I-3] Jul 03, 2019 4:12pm DUROUJO