Hallandale Beach
PROGRESS. INNOVATION. OPPORTUNITY.

CITY OF HALLANDALE BEACH
WATER TREATMENT PLANT
TRANSFER PUMP REPLACEMENT

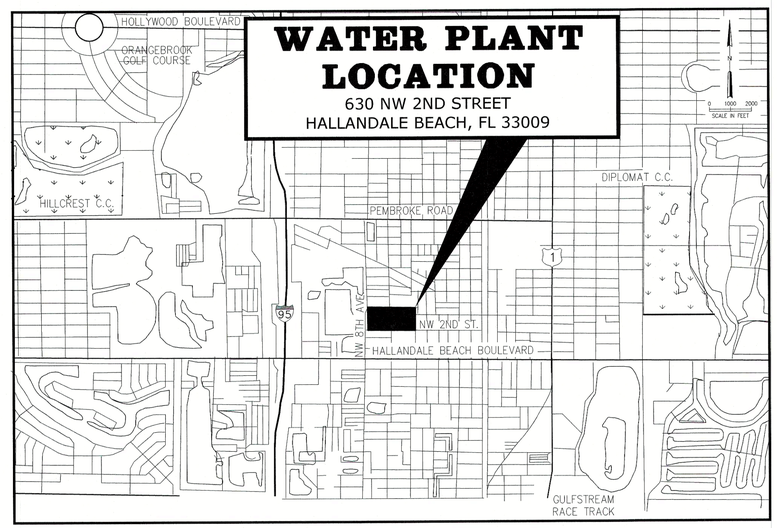

LOCATION MAP

NTS

BID SET

OCTOBER 2019

Hazen
HAZEN AND SAWYER
4000 HOLLYWOOD BOULEVARD, SUITE 750N
HOLLYWOOD, FLORIDA 33021
CERTIFICATE OF AUTHORIZATION NO. : 2771

10/30/19

GEORGE A. BROWN
LICENSE
No 56076
STATE OF FLORIDA
PROFESSIONAL ENGINEER

TITLE SHEET AND LOCATION MAP
SHEET 1 OF 40
DRAWING No. G-01

BID SET

LIST OF DRAWINGS

GENERAL

Sheet Number	Sheet Title
G-01	TITLE SHEET AND LOCATION MAP
G-02	LIST OF DRAWINGS
G-03	NOTES
G-04	ABBREVIATIONS, SYMBOLS AND LEGEND
G-05	STAGING PLAN

CIVIL

C-01	OVERALL SITE PLAN
C-02	PROPOSED SITE PLAN
C-03	YARD PIPING
C-04	TRANSFER PUMP ISOLATION PLAN
C-05	CIVIL DETAILS SHEET 1

MECHANICAL

M-01	TRANSFER PUMPS DEMOLITION PLAN AT EL. 14.00
M-02	TRANSFER PUMPS DEMOLITION PLAN AT EL. 20.00
M-03	TRANSFER PUMPS DEMOLITION SECTION SHEET 1
M-04	TRANSFER PUMPS DEMOLITION SECTION SHEET 2
M-05	TRANSFER PUMPS DEMOLITION SECTION SHEET 3
M-06	TRANSFER PUMPS DEMOLITION PHOTOS SHEET 1
M-07	TRANSFER PUMPS DEMOLITION PHOTOS SHEET 2
M-08	TRANSFER PUMPS PROPOSED PLAN
M-09	TRANSFER PUMPS PROPOSED SECTION SHEET 1
M-10	TRANSFER PUMPS PROPOSED SECTION SHEET 2
M-11	TRANSFER PUMPS PROPOSED SECTION SHEET 3
M-12	TRANSFER PUMPS PROPOSED SECTION SHEET 4
M-13	MECHANICAL DETAILS SHEET 1
M-14	MECHANICAL DETAILS SHEET 2

STRUCTURAL

S-01	STRUCTURAL DEMOLITION PLAN
S-02	STRUCTURAL PROPOSED PLAN
S-03	STRUCTURAL SECTIONS
S-04	STRUCTURAL DETAILS SHEET 1
S-05	STRUCTURAL DETAILS SHEET 2

ELECTRICAL

E-01	LEGEND, SYMBOLS, ABBREVIATIONS, AND GENERAL NOTES
E-02	OVERALL PLANT SINGLE LINE DIAGRAM
E-03	OVERALL ELECTRICAL SITE PLAN
E-04	PARTIAL SITE PLAN AND DUCTBANCK SCHEDULE
E-05	GENERATOR BUILDING POWER PLAN
E-06	HIGH SERVICE PUMP STATION POWER PLAN
E-07	TRANSFER PUMP AREA DEMOLITION PLAN
E-08	TRANSFER PUMP AREA DEMOLITION SECTION
E-09	TRANSFER PUMP AREA DEMOLITION PHOTOS
E-10	TRANSFER PUMP AREA POWER AND LIGHTING PLAN
E-11	MEMBRANE MCC-1 SINGLE LINE DIAGRAMS
E-12	LIME PLANT MCC-2 SINGLE LINE DIAGRAMS
E-13	MEMBRANE MCC-1 & LIME PLANT MCC-2 ELEVATIONS
E-14	PANEL SCHEDULES AND RISER DIAGRAMS
E-15	ELEMENTARY CONTROL SCHEMATIC AND CONTROL ONE LINE
E-16	CONDUIT AND WIRE SCHEDULES
E-17	ELECTRICAL DETAILS SHEET 1
E-18	ELECTRICAL DETAILS SHEET 2

INSTRUMENTATION

I-01	INSTRUMENTATION SYMBOLS AND LEGEND
I-02	SCADA NETWORK DIAGRAM
I-03	TRANSFER PUMP STATION PROCESS AND INSTRUMENTATION DIAGRAM
I-04	INSTRUMENTATION DETAILS SHEET 1
I-05	INSTRUMENTATION DETAILS SHEET 2

10/30/19

GEORGE A. BROWN LICENSE No 56076 STATE OF FLORIDA PROFESSIONAL ENGINEER

REV	ISSUED FOR	DATE	BY
1	100% SET FOR PERMITTING	2/15/19	GAB

PROJECT ENGINEER:	L.Z.M.
DESIGNED BY:	A.H.
DRAWN BY:	G.B.
CHECKED BY:	G.A.B

IF THIS BAR DOES NOT MEASURE 1" THEN DRAWING IS NOT TO FULL SCALE 0 1/2" 1"

GEORGE A. BROWN, PE NO. 56076

Hazen

HAZEN AND SAWYER
4000 HOLLYWOOD BOULEVARD, SUITE 750N
HOLLYWOOD, FLORIDA 33021
CERTIFICATE OF AUTHORIZATION NO. : 2771

CITY OF HALLANDALE BEACH

WATER TREATMENT PLANT
TRANSFER PUMP REPLACEMENT

Hallandale Beach PROSPERITY, INNOVATION, OPPORTUNITY

LIST OF DRAWINGS

DATE:	OCTOBER 2019
HAZEN NO.:	40621-001
CONTRACT NO.:	1
DRAWING NUMBER:	G-02

BID SET

File: C:\BMS\HAZEN-PW\DMS57878\G-02 Saved By USUARIO Save Date: 2019/02/13 10:30 AM
PLOT DATE: 2019/10/24 3:37:55 PM BY: TBOCAS

GENERAL NOTES

1. DRAWINGS THAT ILLUSTRATE EXISTING SITE, STRUCTURES, PIPING, ELECTRICAL AND EQUIPMENT ARE BASED UPON RECORD DRAWINGS AVAILABLE UPON REQUEST FOR GENERAL INFORMATIONAL PURPOSES ONLY. REFERENCE THE SECTION ENTITLED "SUMMARY OF WORK".
2. FIELD OBSERVATIONS INDICATE THAT FIELD CONDITIONS DO NOT FULLY MATCH THE ABOVE REFERENCED RECORD DRAWINGS.
3. ALL ELEVATIONS ARE BASED ON THE NATIONAL GEODETIC VERTICAL DATUM OF 1929 (NGVD '29)
4. LOCATION, SIZE, MATERIAL, ALIGNMENT AND ELEVATIONS OF EXISTING FACILITIES HAVE BEEN DETERMINED FROM AVAILABLE RECORDS. THIS INFORMATION IS FURNISHED AS A GUIDE FOR THE CONTRACTOR. THE ENGINEER AND THE OWNER DO NOT GUARANTEE THE ACCURACY OF THESE DATA. THE CONTRACTOR SHALL BE FULLY RESPONSIBLE FOR DETERMINING THE LOCATION AND PROTECTING ALL TYPES OF UTILITIES AND STRUCTURES ENCOUNTERED DURING THE COURSE OF OPERATION ON THIS PROJECT.
5. CONTRACTOR RETAINS FULL RESPONSIBILITY FOR FIELD VERIFICATION OF ALL IMPROVEMENTS INCLUDED AS PART OF THIS WORK. VERIFICATION SHALL INCLUDE STRUCTURAL, ARCHITECTURAL, HVAC, PLUMBING, PROCESS PIPING, ELECTRICAL, IRRIGATION, CONTROLS, EQUIPMENT, FILTER MEDIA AND ANY AND ALL OTHER EXISTING EQUIPMENT WITHIN THE BOUNDARY OF THE WORK, WHETHER SHOWN OR NOT.
6. THE CONTRACTOR IS REQUIRED TO OBTAIN WRITTEN APPROVAL FROM THE ENGINEER FOR ANY DEVIATIONS FROM THE PLANS AND/OR SPECIFICATIONS.
7. THE CONTRACTOR SHALL FIELD VERIFY ALL DIMENSIONS AND ELEVATIONS PRIOR TO COMMENCEMENT OF CONSTRUCTION AND SHALL NOTIFY THE ENGINEER IMMEDIATELY OF ANY REQUIRED PLAN DEVIATIONS.
8. THE CONTRACTOR SHALL BE RESPONSIBLE FOR OBTAINING A DEWATERING PERMIT FROM THE SOUTH FLORIDA WATER MANAGEMENT DISTRICT IF REQUIRED.
9. RESTRAINED JOINT PIPE SHALL BE USED FOR ALL PIPING ON THIS PROJECT. THRUST BLOCKS SHALL NOT BE PERMITTED.
10. CONTRACTOR SHALL PROVIDE A MINIMUM VERTICAL CLEARANCE OF 6" BETWEEN ALL LINES THAT CROSS. CROSSINGS WITH POTABLE WATER LINES SHALL BE AS SHOWN ON THE DRAWINGS.
11. THE CONTRACTOR SHALL RECORD ELEVATIONS OF EXISTING BURIED UTILITIES AT ALL ENCOUNTERED CROSSINGS WITH NEW WORK.
12. ALL CONNECTIONS TO EXISTING PIPING SHALL BE MADE UNDER THE DIRECTION OF THE CITY.
13. MINIMUM DEPTH OF COVER FOR ALL UNDERGROUND PIPING SHALL BE 36" EXCEPT WHERE SHOWN OTHERWISE ON PLANS.
14. PIPE DEFLECTION SHALL NOT EXCEED 75% OF THE MAXIMUM DEFLECTION RECOMMENDED BY THE MANUFACTURER.
15. THE CONTRACTOR SHALL BE RESPONSIBLE AT ALL TIMES THROUGHOUT THE DURATION OF CONSTRUCTION AND UNTIL ACCEPTANCE OF THE WORK FOR THE PROTECTION OF EXISTING AND NEWLY INSTALLED UTILITIES FROM DAMAGE OR DISRUPTION OF SERVICE.
16. THE CONTRACTOR SHALL ADJUST TO FINAL GRADE ALL EXISTING UTILITY CASTINGS INCLUDING VALVE BOXES, MANHOLES, HAND HOLES, PULL BOXES, INLETS AND SIMILAR STRUCTURES IN CONSTRUCTION AREA TO BE OVERLAID WITH ASPHALT.
17. EXISTING BURIED PIPE AND CONDUIT 2" DIAMETER AND SMALLER IS NOT NECESSARILY SHOWN. ELECTRICAL AND INSTRUMENTATION DUCT BANKS NOT SHOWN. WHEN EXCAVATING, THE CONTRACTOR SHALL TAKE ALL NECESSARY PRECAUTIONS TO AVOID DAMAGE TO UNDERGROUND UTILITIES.
18. THE CONTRACTOR SHALL MAKE EXPLORATORY EXCAVATIONS TO VERIFY LOCATIONS AND ELEVATIONS OF UNDERGROUND UTILITIES THAT MAY INTERFERE WITH THE WORK. THE NUMBER OF EXPLORATORY EXCAVATIONS SHALL BE SUFFICIENT TO DETERMINE ALIGNMENT, LOCATION AND ELEVATION.
19. THE WORK TO BE PERFORMED UNDER THESE CONTRACT DOCUMENTS IS AT A FUNCTIONING WATER TREATMENT PLANT WITH A PERMITTED WATER SUPPLY WELLFIELD. THE CONTRACTOR SHALL COMPLY WITH REQUIREMENTS OF THE SPECIFICATIONS, REGULATORY AGENCIES, AND FACILITY OPERATIONS STAFF AT ALL TIMES.
20. THE CONTRACTOR IS ADVISED THAT ALL FITTINGS THAT MAY BE REQUIRED TO MAKE UP VERTICAL ALIGNMENT MAY NOT BE SHOWN ON THE YARD PIPING PLANS.
21. CONTRACTOR SHALL RESTORE ALL LANDSCAPING AND SODDING IMPACTED BY CONSTRUCTION TO ITS ORIGINAL CONDITION OR BETTER.
22. CONTRACTOR SHALL DISPOSE OF ALL DEMOLISHED MATERIALS IN ACCORDANCE WITH LOCAL, STATE AND FEDERAL REGULATIONS.
23. ALL IMPACTED CONSTRUCTION AREAS SHALL BE RETURNED TO PRECONSTRUCTION CONDITIONS OR BETTER BY CONTRACTOR.

EROSION AND SEDIMENT CONTROL NOTES

1. THE CONTRACTOR SHALL PREPARE, OBTAIN APPROVAL OF AND IMPLEMENT A STORM WATER POLLUTION PREVENTION PLAN PER THE SPECIFICATION TITLED "TEMPORARY EROSION AND SEDIMENT CONTROL".
2. CONTRACTOR SHALL EMPLOY BEST MANAGEMENT PRACTICES THROUGHOUT CONSTRUCTION IN ORDER TO ENSURE POLLUTION PREVENTION. CONTRACTOR SHALL COMPLY WITH ALL LOCAL STATE AND OTHER GOVERNMENTAL ENVIRONMENTAL REGULATIONS THROUGHOUT CONSTRUCTION.
3. DURING CONSTRUCTION ALL CATCH BASINS TO BE EQUIPPED WITH FILTER FABRIC AND HAY BALES OVER GRATES.
4. SILT FENCES SHALL BE INSTALLED AS NECESSARY TO CONTROL OR PREVENT DISCHARGE OF SEDIMENT ONTO ADJACENT UNDISTURBED AREAS, OR OFF-SITE AREAS.
5. ALL AREAS DISTURBED DURING CONSTRUCTION SHALL BE STABILIZED WITHIN A REASONABLE PERIOD OF TIME TO ASSURE MINIMUM EROSION OF SOILS.
6. NO LAND CLEARING OR GRADING SHALL BEGIN UNTIL ALL EROSION CONTROL MEASURES HAVE BEEN INSTALLED.
7. ALL EXPOSED AREAS SHALL BE SODDED AS SPECIFIED WITHIN 30 DAYS OF FINAL GRADING.
8. MAINTAIN EROSION CONTROL MEASURES AFTER EACH RAIN AND AT LEAST ONCE A WEEK.
9. THIS PLAN SHALL NOT BE CONSIDERED ALL INCLUSIVE AS THE CONTRACTOR SHALL TAKE ALL NECESSARY PRECAUTIONS TO PREVENT SOIL SEDIMENT FROM LEAVING THE SITE.
10. CONTRACTOR SHALL COMPLY WITH ALL STATE AND LOCAL ORDINANCES THAT APPLY.
11. ADDITIONAL EROSION AND SEDIMENT CONTROL MEASURES WILL BE INSTALLED IF DEEMED NECESSARY BY CITY, COUNTY, AND STATE OF FLORIDA ON SITE INSPECTION, AT NO ADDITIONAL COST TO THE OWNER.
12. LAND DISTURBING ACTIVITIES SHALL NOT COMMENCE UNTIL APPROVAL TO DO SO HAS BEEN RECEIVED BY GOVERNING AUTHORITIES.
13. IF INSTALLATION OF STORM DRAINAGE SYSTEM (WHERE SHOWN ON THE DRAWINGS) SHOULD BE INTERRUPTED BY WEATHER OR NIGHTFALL, THE PIPE ENDS SHALL BE COVERED WITH FILTER FABRIC.
14. ALL EXISTING STRUCTURES, FENCING, TREES, AND ETC. SHOW TO BE REMOVED ON THE DEMOLITION DRAWINGS SHALL BE REMOVED AND DISPOSED OF OFF SITE. BURNING WILL NOT BE ALLOWED ON-SITE.
15. CONTRACTOR SHALL BE RESPONSIBLE TO TAKE WHATEVER MEANS NECESSARY TO ESTABLISH PERMANENT SOIL STABILIZATION.
16. CONTRACTOR IS TO PROVIDE EROSION CONTROL/SEDIMENTATION BARRIER (HAY BALES OR SILTATION CURTAIN) TO PREVENT SILTATION OF ADJACENT PROPERTY, STREETS, STORM SEWERS AND WATER WAYS. IN ADDITION CONTRACTOR SHALL PLACE STRAW, MULCH OR OTHER SUITABLE MATERIAL ON GROUND IN AREAS WHERE CONSTRUCTION RELATED TRAFFIC IS TO ENTER AND EXIT SITE IF IN THE OPINION OF THE ENGINEER AND/OR LOCAL AUTHORITIES IF EXCESSIVE QUANTITIES OF EARTH ARE TRANSPORTED OFF-SITE EITHER BY NATURAL DRAINAGE OR BY VEHICULAR TRAFFIC. THE CONTRACTOR IS TO REMOVE AND CLEAN SAID EARTH TO THE SATISFACTION OF THE ENGINEER AND/OR AUTHORITIES. EROSION CONTROL BARRIER SHALL BE ESTABLISHED AS THE FIRST ITEM OF WORK.

PROPERTY AND FLOOD NOTES

PROPERTY INFO:

FOLIO No.: 514228010010

ADDRESS:

630 NW 2ND STREET
HALLANDALE BEACH, FL 33009

LOCATION INFO:

TOWNSHIP: 51S
RANGE: 42E
SECTION: 28
LATITUDE: N25° 59' 18.24"
LONGITUDE: W80° 09' 18"

FLOOD INFO:

1. 100 YEAR FLOOD ELEVATION: 8.3 (NGVD 1929)
   SOURCE: BROWARD COUNTY FLOOD MAP MARCH, 2000.
2. FLOOD ZONE X (ABOVE 500 YEAR FLOOD PLAIN) PER FEMA DESIGNATIONS EFFECTIVE 8/18/2014.
3. FLOOD PANEL: 12011C0732H

10/30/19

GEORGE A. BROWN LICENSE No 56076 STATE OF FLORIDA PROFESSIONAL ENGINEER

REV	ISSUED FOR	DATE	BY
1	100% SET FOR PERMITTING	2/15/19	GAB

PROJECT ENGINEER:	L.Z.M.
DESIGNED BY:	A.H.
DRAWN BY:	G.B.
CHECKED BY:	G.A.B

IF THIS BAR DOES NOT MEASURE 1" THEN DRAWING IS NOT TO FULL SCALE 0 1/2" 1"

GEORGE A. BROWN, PE NO. 56076

Hazen

HAZEN AND SAWYER
4000 HOLLYWOOD BOULEVARD, SUITE 750N
HOLLYWOOD, FLORIDA 33021
CERTIFICATE OF AUTHORIZATION NO. : 2771

CITY OF HALLANDALE BEACH

WATER TREATMENT PLANT
TRANSFER PUMP REPLACEMENT

Hallandale Beach
PROGRESS. INNOVATION. OPPORTUNITY.

NOTES

DATE:	OCTOBER 2019
HAZEN NO.:	40621-001
CONTRACT NO.:	1
DRAWING NUMBER:	G-03

BID SET

File: C:\BMS\HAZEN-PW\DMS27878\G-03 Saved By USUARIO Save Date: 2019/02/13 10:30 AM
PLOT DATE: 2019/10/24 3:38:00 PM BY: TBOCAS

SYMBOLS

- SOLENOID
- MOTOR OPERATED
- BALL VALVE
- BUTTERFLY VALVE/DAMPER
- CHECK VALVE
- GATE VALVE
- PLUG VALVE
- THREE WAY VALVE
- PRESSURE REDUCING/ RELIEF VALVE
- PRESSURE REGULATING VALVE
- VENTURI METER
- FLAME ARRESTER
- HOSE BIBB (PLAN)
- HOSE BIBB (ELEVATION)
- MECHANICAL COUPLING
- HARNESSED MECHANICAL COUPLING
- GROOVED COUPLING
- HARNESSED EXPANSION JOINT
- EXPANSION JOINT
- GAUGE
- UNION
- MAGNETIC METER
- VENTURI METER
- FIRE HYDRANT
- MANHOLE
- SEALED MANHOLE
- PROPOSED PIPELINE/STRUCTURE
- EXISTING UTILITIES/STRUCTURE
- PROPOSED PIPELINE (DOUBLE LINE IF SCALE OF DRAWING PERMITS)
- WELDED JOINT
- FLANGED JOINT
- MECHANICAL JOINT
- SOCKET WELDED JOINT
- PROPOSED STRUCTURE OR FACILITY
- REDUCER (SINGLE LINE)
- REDUCER (DOUBLE LINE)
- CONCRETE PIPE SUPPORT

ABBREVIATIONS

VALVES, FITTINGS, ETC.

ARV	AIR RELIEF VALVE
BV	BALL VALVE
BF	BLIND FLANGE
BFV	BUTTERFLY VALVE
CGV	CHLORINE GAS VALVE UNDER VACUUM
CV	CHECK VALVE
CPLG	COUPLING
ED	EQUIPMENT DRAIN
EXP JT	EXPANSION JOINT
FH	FIRE HYDRANT
FTG	FITTING
FLG	FLANGE
FD	FLOOR DRAIN
GV	GATE VALVE
HB	HOSE BIBB
LR	LONG RADIUS
MJ	MECHANICAL JOINT
MOV	MOTOR OPERATED VALVE
NPT	NATIONAL PIPE THREAD
PE	PLAIN END
PV	PLUG VALVE
PS	PUMP STATION
PRV	PRESSURE RELIEF VALVE
RD	ROOF DRAIN
SOV	SOLENOID OPERATED VALVE
THD	THREADED
VAC	VACUUM

PIPING

CU	COPPER OR CUBIC
DIP	DUCTILE IRON PIPE
FM	FORCE MAIN
GSP	GALVANIZED STEEL PIPE
IPS	IRON PIPE SIZE
PVC	POLYVINYLCHLORIDE
PCCP	PRECAST CONCRETE CYLINDER PIPE
RCP	REINFORCED CONCRETE PIPE

GENERAL

A/C	AIR CONDITIONER
AL, ALUM	ALUMINUM
APPROX	APPROXIMATE
AFF	ABOVE FINISHED FLOOR
A.K.A.	AS KNOWN AS
ARCH	ARCHITECTURAL
AS	ANTISCALANT
BD	BLOWDOWN
BLK	BLOCK
BOTT	BOTTOM
BP	BID PACKAGE
BLDG	BUILDING
BSP	BACTERIOLOGICAL SAMPLING POINT
BWD	BACKWASH DRAIN
CB	CATCH BASIN
CA	SODIUM HYDROXIDE (CAUSTIC)
CC	CENTER TO CENTER
CHK'D	CHECKERED
CL	CENTER LINE
CLG	CHLORINE GAS
CLS	CHLORINE SOLUTION
CO	CLEAN OUT
CN	CONCENTRATE WATER
CLGV	CHLORINE GAS - VACUUM
CLR	CLEAR
COL	COLUMN
CO	COMPANY
CONC	CONCRETE
CONST	CONSTRUCTION
CONT	CONTINUOUS
CSD	CLEANING SOLUTION DRAIN
CSR	CLEANING SOLUTION RETURN
CS	CHLORINE SOLUTION
CSS	CLEANING SOLUTION SUPPLY
CW	CONDITIONED WATER
D	DRAIN
DET	DETAIL
DIAG	DIAGONAL
DIA	DIAMETER
DIM	DIMENSION
DISCH	DISCHARGE
DWL	DOWEL
DN	DOWN
DWG	DRAWING
EA	EACH
EE	EACH END
EF	EACH FACE
EW	EACH WAY
ECC	ECCENTRIC
EFF	EFFLUENT
ELEC	ELECTRIC
EL, ELEV	ELEVATION
EOP	EDGE OF PAVEMENT
EQUIP	EQUIPMENT
EXH	EXHAUST
EXIST, EX	EXISTING
EXP	EXPANSION
EXT	EXTERIOR
FIN	FINISH
FE	FIRE EXTINGUISHER
FL	FLOOR
FF	FINISH FLOOR
FLG	FLANGED
FM	FORCE MAIN
FR	FUEL RETURN
FS	FUEL SUPPLY
FSS	FLUSHING SOLUTION SUPPLY
FTG	FOOTING
FW	FINISHED WATER
GALV	GALVANIZED
GPM	GALLONS PER MINUTE
HP	HIGH POINT
HWL	HIGH WATER LEVEL
HORIZ	HORIZONTAL
HWH	HOT WATER HEATER
INFL	INFLUENT
INJ	INJECTION
ID	INSIDE DIAMETER
INSUL	INSULATION
INV	INVERT
JT	JOINT
LG	LONG
LN	LINE
LP	LOW POINT
LWL	LOW WATER LEVEL
MH	MANHOLE
MANUF	MANUFACTURER
MGD	MILLION GALLONS PER DAY
MO	MASONRY OPENING
MAX	MAXIMUM
MECH	MECHANICAL
MIN	MINIMUM
MJ	MECHANICAL JOINT
MOV	MOTOR OPERATED VALVE
NAVD	NORTH AMERICAN VERTICAL DATUM
NF	NANOFILTRATION
NPW	NON POTABLE WATER
NIC	NOT IN CONTRACT
NTS	NOT TO SCALE
NO	NUMBER
OC	ON CENTER
OPNG	OPENING
OD	OUTSIDE DIAMETER
OF	OUTSIDE FACE
OF	OVERFLOW
ORP	OXIDATION REDUCTION POTENTIAL
PCSR	PERMEATE CLEANING SOLUTION RETURN
PM	PERMEATE WATER
PW	POTABLE WATER
LBS/FT	POUNDS PER FOOT
P/L	PROPERTY LINE
RAD, R	RADIUS
RECIR	RECIRCULATION
RED	REDUCING
REHAB	REHABILITATION
REINF	REINFORCING
REQ'D	REQUIRED
RJ	RESTRAINED JOINT
RO	REVERSE OSMOSIS
ROT	ROTATED
R/W, ROW	RIGHT OF WAY
RW	RAW WATER
S	SAMPLE
SAN	SANITARY
SFA	SULFURIC ACID
SECT	SECTION
SEQ	SEQUESTRANT
SH	SODIUM HYPOCHLORITE
SHT	SHEET
SI	SCALE INHIBITOR
SL	SLUDGE
SOF	SOFTENED WATER
SPD	SUMP PUMP DISCHARGE
SPEC	SPECIFICATION
SQ	SQUARE
SS	SANITARY SEWER
SST	STAINLESS STEEL
STL	STEEL
STRUC	STRUCTURAL
SYMM	SYMMETRICAL
TBD	TO BE DETERMINED
TEMP	TEMPORARY
THK	THICK
TI	TEMPERATURE INDICATOR
TOC	TOP OF CONCRETE
TOS	TOP OF SLAB
TYP	TYPICAL
VTR	VENT THROUGH ROOF
VERT	VERTICAL
WTR	WATER
W/L	WATER LEVEL
WWF	WELDED WIRE FABRIC
W/	WITH

SECTION AND DETAIL IDENTIFICATION

SECTION IDENTIFICATION

(1) SECTION CUT ON DRAWING G-1:

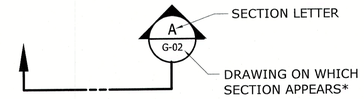

(2) ON DRAWING G-2 THIS SECTION IS IDENTIFIED AS:

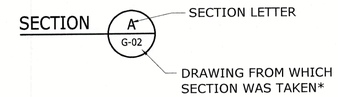

DETAIL IDENTIFICATION

(1) DETAIL CALL-OUT ON DRAWING G-1 AS:

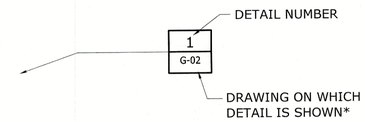

(2) ON DRAWING G-2 THIS DETAIL IDENTIFIED AS:

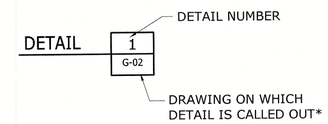

STANDARD DETAIL IDENTIFICATION

(1) DETAIL CALL-OUT ON PLAN OR SECTION:

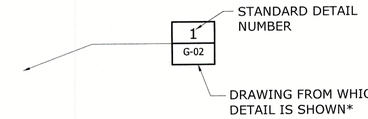

(2) ON DRAWING G-4 THIS DETAIL IDENTIFIED AS:

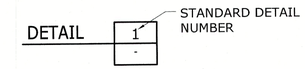

NOTE: IF PLAN AND SECTION (OR DETAIL CALL-OUT AND DETAIL) ARE SHOWN ON SAME DRAWING, DRAWING NUMBER IS REPLACE BY A LINE.

NOTES:

1. ELECTRICAL SYMBOLS SHOWN ON ELECTRICAL SHEETS.
2. FOR WELDING SYMBOLS USE AMERICAN WELDING SOCIETY STANDARD SYMBOLS. SEE AMERICAN INSTITUTE OF STEEL CONSTRUCTION MANUAL.

REV	ISSUED FOR	DATE	BY
1	100% SET FOR PERMITTING	2/15/19	GAB

PROJECT ENGINEER:	L.Z.M.
DESIGNED BY:	A.H.
DRAWN BY:	G.B.
CHECKED BY:	G.A.B

IF THIS BAR DOES NOT MEASURE 1" THEN DRAWING IS NOT TO FULL SCALE 0 1/2" 1"

GEORGE A. BROWN LICENSE No. 56076 STATE OF FLORIDA PROFESSIONAL ENGINEER

10/30/19

GEORGE A. BROWN, PE NO. 56076

Hazen

HAZEN AND SAWYER
4000 HOLLYWOOD BOULEVARD, SUITE 750N
HOLLYWOOD, FLORIDA 33021
CERTIFICATE OF AUTHORIZATION NO. : 2771

CITY OF HALLANDALE BEACH

WATER TREATMENT PLANT
TRANSFER PUMP REPLACEMENT

Hallandale Beach
PRESERVE, INNOVATION, OPPORTUNITY

ABBREVIATIONS, SYMBOLS AND LEGEND

DATE:	OCTOBER 2019
HAZEN NO.:	40621-001
CONTRACT NO.:	1
DRAWING NUMBER:	G-04

BID SET

File: C:\SMS\HAZEN-PW\DMS27879\G-04 Saved By USUARIO Save Date: 2019/02/13 10:30 AM
PLOT DATE: 2019/10/24 3:38:04 PM BY: TBOCAS

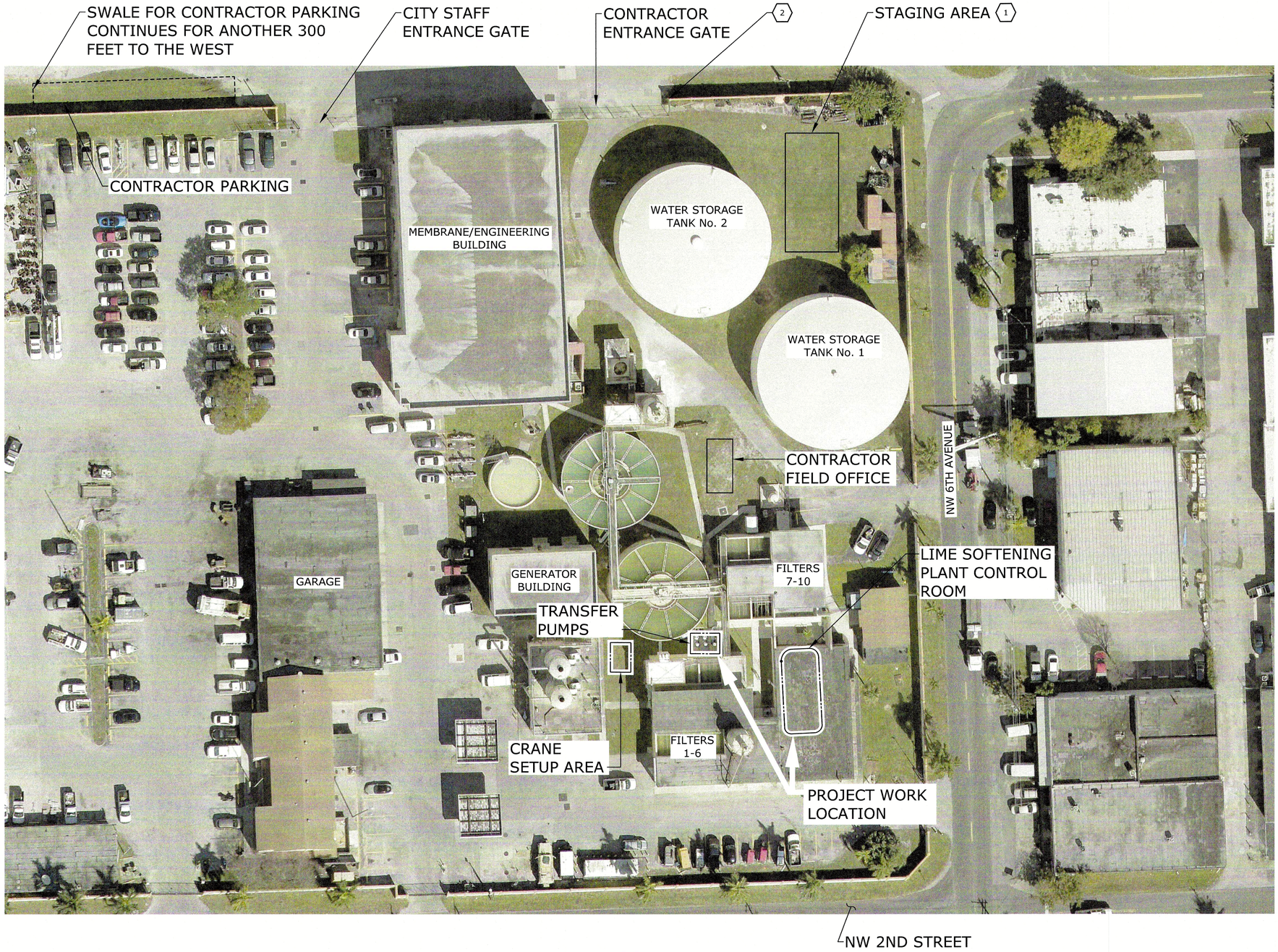

AERIAL PHOTO
NTS

N

ADDRESS:

630 NW 2ND STREET HALLANDALE BEACH, FL 33009

PROJECT SCOPE:

THE FOLLOWING IS A BRIEF LISTING OF THE MAJOR SCOPE ITEMS AND IS PRESENTED FOR INFORMATIONAL PURPOSES FOR THE PERMIT AGENCY REVIEWERS.

1. REMOVE AND REPLACE THREE EXISTING WATER TRANSFER PUMPS AND ALL ASSOCIATED PIPING AND ELECTRICAL.

STAGING AREA NOTES:

1. CONTRACTOR TO ENSURE THAT PLANT ACCESS ROADWAY IS KEPT OPEN. OBTAIN PRIOR WRITTEN APPROVAL BY THE CITY BEFORE RESTRICTING OR BLOCKING ACCESS.
2. CONTRACTOR SHALL REFER TO SPECIFICATION 01550 FOR ADDITIONAL REQUIREMENTS REGARDING SITE ACCESS AND STORAGE.
3. CONTRACTOR SHALL REFER TO SPECIFICATION 01510 FOR TEMPORARY UTILITIES AND SERVICES DURING CONSTRUCTION.

CONTRACTOR PARKING NOTES:

1. CONTRACTOR PARKING SHALL BE LIMITED TO THE SWALE AREA ALONG THE NORTHERN PERIMETER OF THE WATER PLANT.
2. DO NOT BLOCK ACCESS ROAD OR GATES.

CONTRACTOR FIELD OFFICE NOTES:

1. WATER CONNECTION IS AVAILABLE WITHIN 100' OF THE FIELD OFFICE. FURNISH AND INSTALL ALL NEEDED TEMPORARY PIPING. OBTAIN CITY PROVIDED WATER METER.
2. CONNECTION OF THE CONTRACTOR FIELD OFFICE TO THE SANITARY SEWER SYSTEM MAY NOT BE AVAILABLE. ASSUME PROVIDING A WASTE HOLDING TANK AND PUMP-OUT SERVICE.
3. CONTRACTOR SHALL DESIGN, FURNISH AND INSTALL ALL NEEDED PANELS AND WIRING FOR TEMPORARY POWER TO FIELD OFFICE.

KEYED NOTES:

1. COORDINATE WITH THE CITY TO REMOVE ITS VEHICLES AND EQUIPMENT FROM THIS LOCATION DURING CONSTRUCTION ACTIVITY.
2. TEMPORARY CONSTRUCTION ENTRANCE SIGN TO BE DESIGNED, FURNISHED AND INSTALLED BY THE CONTRACTOR. PROVIDE A MINIMUM OF FIVE SIGNS AROUND THE PERIMETER OF THE WATER PLANT TO DIRECT CONSTRUCTION TRAFFIC TO THE CONTRACTOR PARKING AND STAGING AREA.

10/30/19

GEORGE A. BROWN LICENSE No 56076 STATE OF FLORIDA PROFESSIONAL ENGINEER

REV	ISSUED FOR	DATE	BY
1	100% SET FOR PERMITTING	2/15/19	GAB

PROJECT ENGINEER:	L.Z.M.
DESIGNED BY:	A.H.
DRAWN BY:	G.B.
CHECKED BY:	G.A.B.

IF THIS BAR DOES NOT MEASURE 1" THEN DRAWING IS NOT TO FULL SCALE 0 1/2" 1"

GEORGE A. BROWN, PE NO. 56076

Hazen

HAZEN AND SAWYER
4000 HOLLYWOOD BOULEVARD, SUITE 750N
HOLLYWOOD, FLORIDA 33021
CERTIFICATE OF AUTHORIZATION NO. : 2771

CITY OF HALLANDALE BEACH

WATER TREATMENT PLANT
TRANSFER PUMP REPLACEMENT

Hallandale Beach
PROSPERITY. INNOVATION. OPPORTUNITY.

STAGING PLAN

DATE:	OCTOBER 2019
HAZEN NO.:	40621-001
CONTRACT NO.:	1
DRAWING NUMBER:	G-05

BID SET

File: C:\BMS\HAZEN-PW\DMS37878\G-05 Saved By USUARIO Save Date: 2019/02/13 10:29 AM
PLOT DATE: 2019/10/24 3:38:20 PM BY: TBOCAS

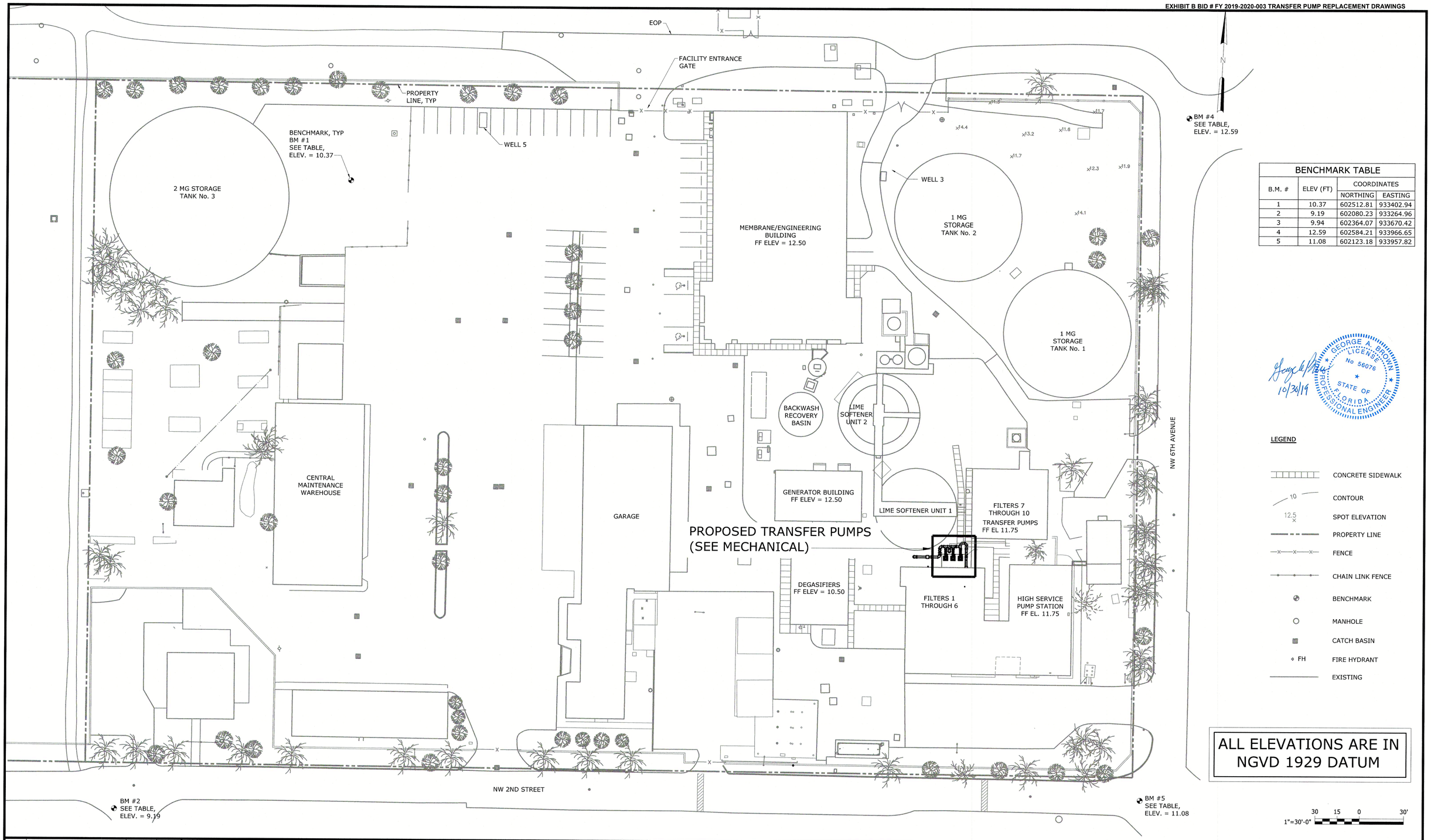

BENCHMARK TABLE			
B.M. #	ELEV (FT)	COORDINATES	
		NORTHING	EASTING
1	10.37	602512.81	933402.94
2	9.19	602080.23	933264.96
3	9.94	602364.07	933670.42
4	12.59	602584.21	933966.65
5	11.08	602123.18	933957.82

GEORGE A. BROWN LICENSE No 56076 STATE OF FLORIDA PROFESSIONAL ENGINEER

10/30/19

LEGEND

- CONCRETE SIDEWALK
- CONTOUR (10)
- SPOT ELEVATION (12.5)
- PROPERTY LINE
- FENCE
- CHAIN LINK FENCE
- BENCHMARK
- MANHOLE
- CATCH BASIN
- FH FIRE HYDRANT
- EXISTING

ALL ELEVATIONS ARE IN NGVD 1929 DATUM

REV	ISSUED FOR	DATE	BY
1	100% SET FOR PERMITTING	2/15/19	GAB

PROJECT ENGINEER:	L.Z.M.
DESIGNED BY:	A.H.
DRAWN BY:	G.B.
CHECKED BY:	G.A.B.

IF THIS BAR DOES NOT MEASURE 1" THEN DRAWING IS NOT TO FULL SCALE 0 1/2" 1"

GEORGE A. BROWN, PE No. 56076

Hazen

HAZEN AND SAWYER
4000 HOLLYWOOD BOULEVARD, SUITE 750N
HOLLYWOOD, FLORIDA 33021
CERTIFICATE OF AUTHORIZATION NO. : 2771

CITY OF HALLANDALE BEACH

WATER TREATMENT PLANT
TRANSFER PUMP REPLACEMENT

Hallandale Beach
PROSPERITY. INNOVATION. OPPORTUNITY

OVERALL SITE PLAN

DATE: OCTOBER 2019
HAZEN NO.: 40621-001
CONTRACT NO.: 1
DRAWING NUMBER: C-01

BID SET

File: C:\BMS\HAZEN-PW\DMS37875\C-01 Saved By USUARIO Save Date: 2019/02/13 10:44 AM
PLOT DATE: 2019/10/24 3:41:28 PM BY: IBOCAS

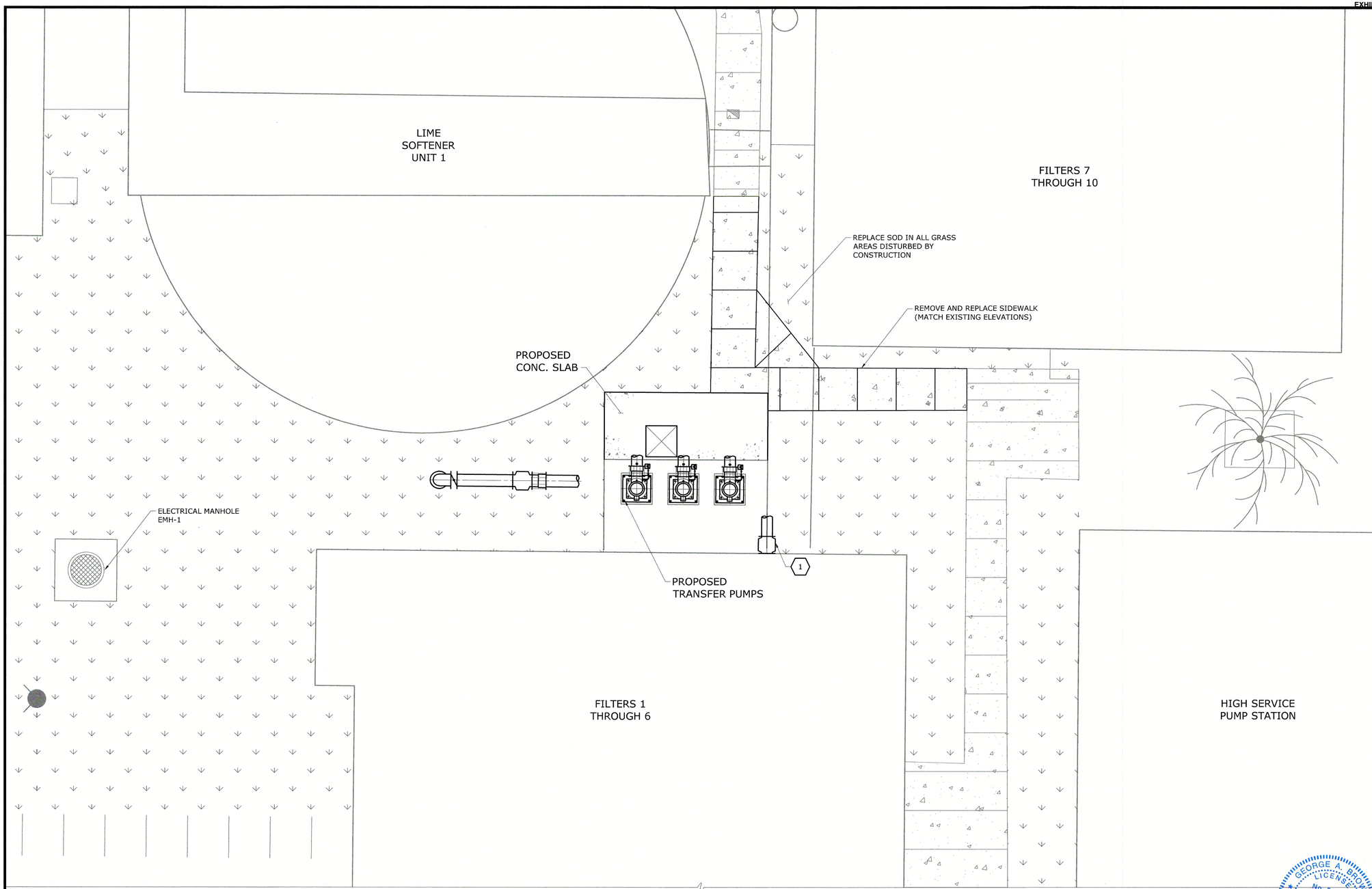

ALL ELEVATIONS ARE IN NGVD 1929 DATUM

KEYED NOTES:

1. ALL ABOVE GROUND PIPING AND STRUCTURES ARE NOT SHOWN FOR CLARITY.

LEGEND:

- EXISTING
- PROPOSED
- PROPOSED CONCRETE SIDEWALK
- EXISTING CONCRETE SIDEWALK
- PROPOSED SOD

811 KNOW WHAT'S BELOW ALWAYS CALL 811 BEFORE YOU DIG
It's fast. It's free. It's the law.
www.callsunshine.com

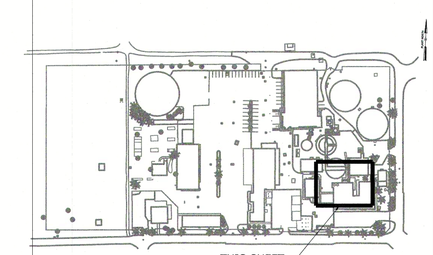

KEY MAP

GEORGE A. BROWN LICENSE No 56076 STATE OF FLORIDA PROFESSIONAL ENGINEER

10/30/19

1"=5'-0"

5 2.5 0 5'

REV	ISSUED FOR	DATE	BY
1	100% SET FOR PERMITTING	2/15/19	GAB

PROJECT ENGINEER:	L.Z.M.
DESIGNED BY:	A.H.
DRAWN BY:	G.B.
CHECKED BY:	G.A.B.

IF THIS BAR DOES NOT MEASURE 1" THEN DRAWING IS NOT TO FULL SCALE 0 1/2" 1"

GEORGE A. BROWN, PE NO. 56076

Hazen

HAZEN AND SAWYER
4000 HOLLYWOOD BOULEVARD, SUITE 750N
HOLLYWOOD, FLORIDA 33021
CERTIFICATE OF AUTHORIZATION NO. : 2771

CITY OF HALLANDALE BEACH

WATER TREATMENT PLANT
TRANSFER PUMP REPLACEMENT

Hallandale Beach
PROGRESS. INNOVATION. OPPORTUNITY

PROPOSED SITE PLAN

DATE:	OCTOBER 2019
HAZEN NO.:	40621-001
CONTRACT NO.:	1
DRAWING NUMBER:	C-02

BID SET

File: C:\BMS\HAZEN-FW\DMS57875\C-02 Saved By: USUARIO Save Date: 2019/02/13 10:44 AM
PLOT DATE: 2019/10/24 3:41:27 PM BY: TBOCAS

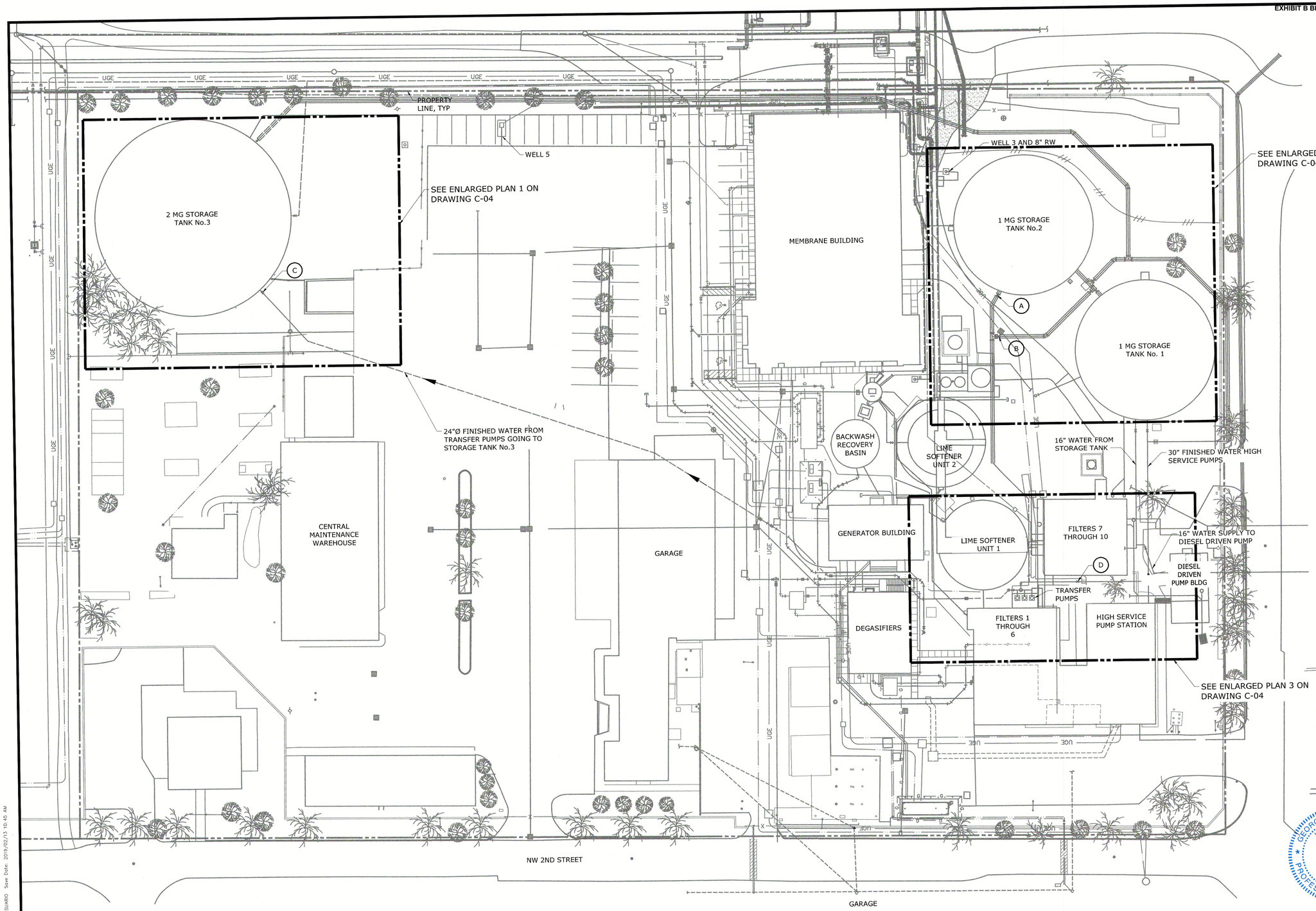

811 KNOW WHAT'S BELOW ALWAYS CALL 811 BEFORE YOU DIG
It's fast. It's free. It's the law.
www.callsunshine.com

ALL ELEVATIONS ARE IN NGVD 1929 DATUM

LEGEND:

EXISTING

PROPOSED

(X) VALVE "X" SEE DRAWING C-04

THIS SHEET

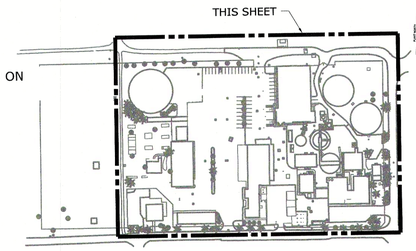

KEY MAP

GEORGE A. BROWN LICENSE No 56076 STATE OF FLORIDA PROFESSIONAL ENGINEER

George A. Brown 10/30/19

1"=30'-0"

30 15 0 30'

REV	ISSUED FOR	DATE	BY
1	100% SET FOR PERMITTING	2/15/19	GAB

PROJECT ENGINEER:	L.Z.M.
DESIGNED BY:	A.H.
DRAWN BY:	G.B.
CHECKED BY:	G.A.B.

IF THIS BAR DOES NOT MEASURE 1" THEN DRAWING IS NOT TO FULL SCALE 0 1/2" 1"

GEORGE A. BROWN, PE NO. 56076

Hazen

HAZEN AND SAWYER
4000 HOLLYWOOD BOULEVARD, SUITE 750N
HOLLYWOOD, FLORIDA 33021
CERTIFICATE OF AUTHORIZATION NO. : 2771

CITY OF HALLANDALE BEACH

WATER TREATMENT PLANT
TRANSFER PUMP REPLACEMENT

Hallandale Beach
PROGRESS. INNOVATION. OPPORTUNITY.

YARD PIPING

DATE:	OCTOBER 2019
HAZEN NO.:	40621-001
CONTRACT NO.:	1
DRAWING NUMBER:	C-03

BID SET

File: C:\BMS\HAZEN-PW\AMS57875\C-03 Saved By USUARIO Save Date: 2019/02/13 10:45 AM
PLOT DATE: 2019/10/24 3:41:33 PM BY: TBDCAS

VALVE TABLE

VALVE MARK	DESCRIPTION	VALVE DIAMETER	VALVE TYPE
A	STORAGE TANK No.1 TANK FILL SHUTOFF VALVE	18"	UNKNOWN
B	STORAGE TANK No.2 TANK FILL SHUTOFF VALVE	18"	GATE
C	STORAGE TANK No.3 TANK FILL SHUTOFF VALVE	24"	GATE
D	HIGH SERVICE PUMP SUCTION HEADER INTERCONNECT SHUTOFF VALVE	18"	BUTTERFLY

TRANSFER PUMP STATION ISOLATION PLAN:

1. LOCATE VALVES "A", "B", "C" AND "D".
2. CLOSING VALVES "A", "B", "C" AND "D" WILL ISOLATE THE TRANSFER PUMPS FROM THE STORAGE TANKS AND THE HIGH SERVICE PUMP STATION.
3. TEMPORARY CLOSURES OF VALVES "A", "B", "C" AND "D" SHALL BE ALLOWED ON A LIMITED BASIS. THE LIMITATIONS ARE AS DESCRIBED IN THE SPECIFICATION SECTION TITLED "MAINTENANCE OF UTILITY OPERATIONS DURING CONSTRUCTION".
4. AS DESCRIBED IN THE SPECIFICATION SECTION TITLED "MAINTENANCE OF UTILITY OPERATIONS DURING CONSTRUCTION", COORDINATE WITH THE CITY TO OPERATE VALVES "A", "B", "C" AND "D".

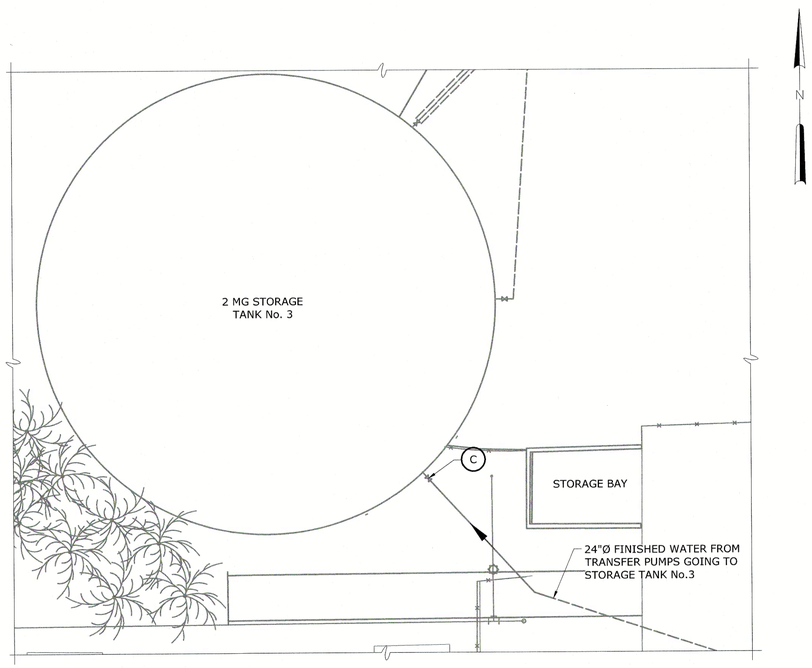

ENLARGED PLAN 1
1"=20'-0"

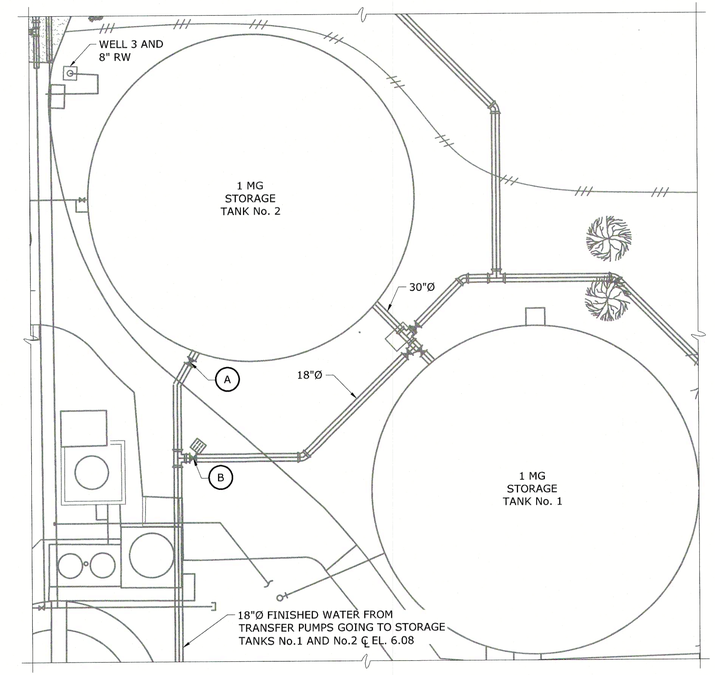

ENLARGED PLAN 2
1"=20'-0"

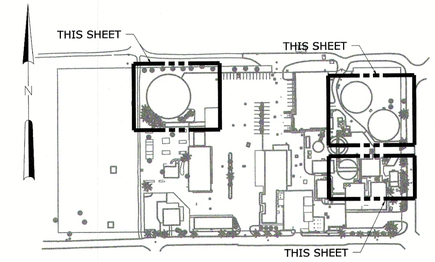

KEY MAP

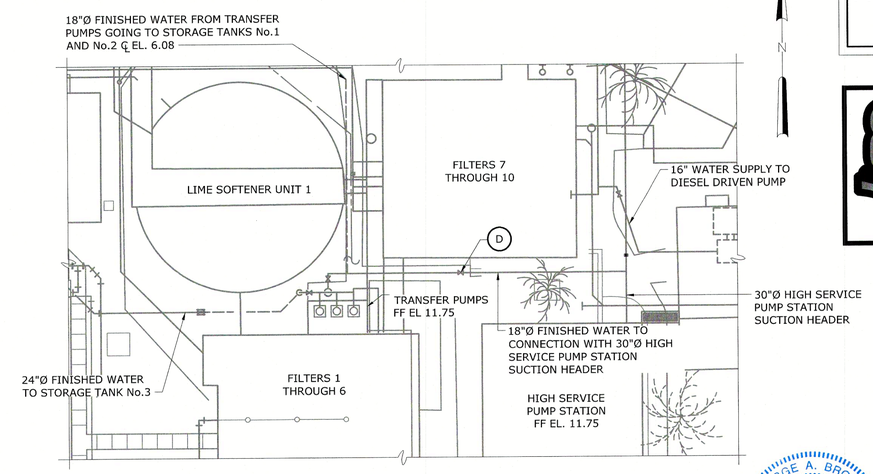

ENLARGED PLAN 3
1"=20'-0"

ALL ELEVATIONS ARE IN NGVD 1929 DATUM

811 KNOW WHAT'S BELOW ALWAYS CALL 811 BEFORE YOU DIG
It's fast. It's free. It's the law.
www.callsunshine.com

LEGEND:
- EXISTING
- PROPOSED
- TO BE REMOVED

GEORGE A. BROWN LICENSE No 56076 STATE OF FLORIDA PROFESSIONAL ENGINEER
10/30/19

1"=20'-0" 20 10 0 20'

REV	ISSUED FOR	DATE	BY
1	100% SET FOR PERMITTING	2/15/19	GAB

PROJECT ENGINEER:	L.Z.M.
DESIGNED BY:	A.H.
DRAWN BY:	G.B.
CHECKED BY:	G.A.B.

IF THIS BAR DOES NOT MEASURE 1" THEN DRAWING IS NOT TO FULL SCALE 0 1/2" 1"

GEORGE A. BROWN, PE NO. 56076

Hazen
HAZEN AND SAWYER
4000 HOLLYWOOD BOULEVARD, SUITE 750N
HOLLYWOOD, FLORIDA 33021
CERTIFICATE OF AUTHORIZATION NO. : 2771

CITY OF HALLANDALE BEACH

WATER TREATMENT PLANT
TRANSFER PUMP REPLACEMENT

Hallandale Beach
PROSPERITY, INNOVATION, OPPORTUNITY

TRANSFER PUMP
ISOLATION PLAN

DATE:	OCTOBER 2019
HAZEN NO.:	40621-001
CONTRACT NO.:	1
DRAWING NUMBER:	C-04

BID SET

File: C:\BAS\HAZEN-PW\DMS27875\C-04 Saved By USUARIO Save Date: 2019/02/13 10:45 AM
PLOT DATE: 2019/10/24 3:41:39 PM BY: TBOCAS

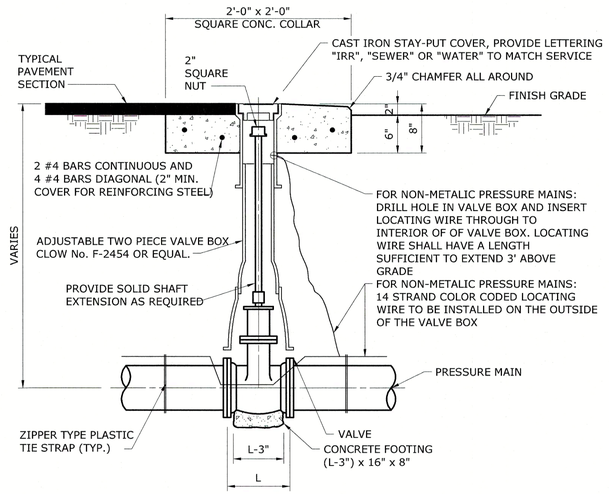

VALVE BOX

DETAIL	1
NTS	-

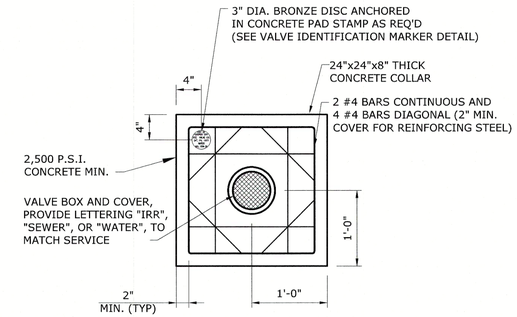

VALVE BOX COLLAR

DETAIL	2
NTS	-

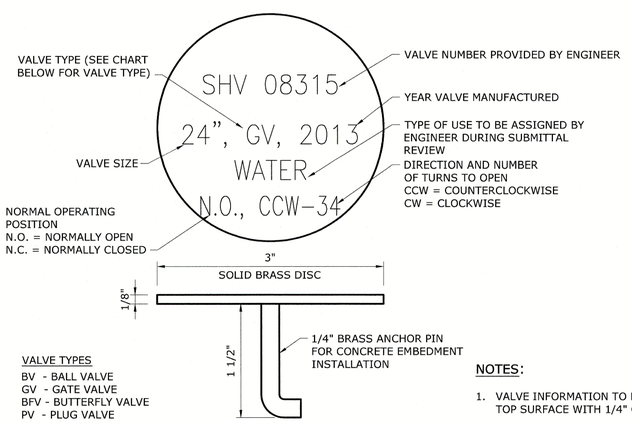

VALVE TYPES

BV - BALL VALVE
GV - GATE VALVE
BFV - BUTTERFLY VALVE
PV - PLUG VALVE

NOTES:

1. VALVE INFORMATION TO BE ENGRAVED INTO TOP SURFACE WITH 1/4" CAPITAL LETTERS.
2. ENTIRE MARKER TO BE COATED WITH CLEAR EPOXY TO PREVENT TARNISHING.
3 MARKERS SHALL BE MANUFACTURED BY WAGCO MARKERS, OR APPROVED EQUAL.

VALVE IDENTIFICATION MARKER

DETAIL	3
NTS	-

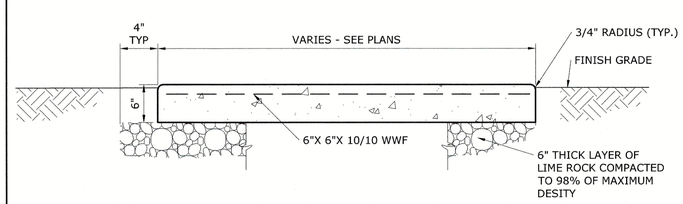

CONCRETE WALKWAY REINFORCING

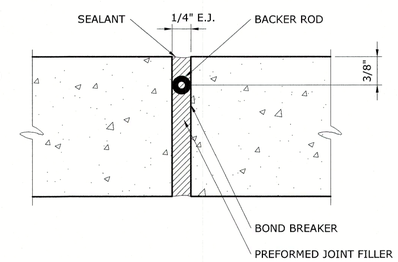

CONCRETE WALKWAY EXPANSION JOINT

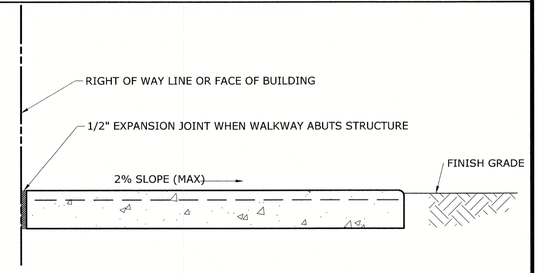

SLOPE

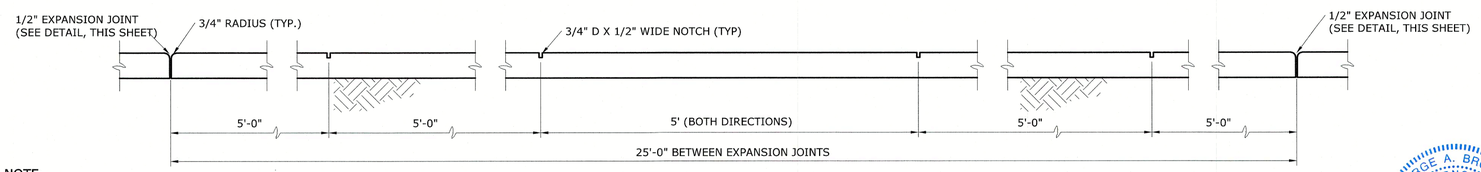

NOTE:

1. THE CONTRACTOR SHALL CONSTRUCT AN EXPANSION JOINT AT SPACING SHOWN ABOVE, AT THE END OF DAYS WORK, POINTS OF CURVATURE, AND AT ADJOINING STRUCTURES.

SECTION

CONCRETE SIDEWALK

DETAIL	4
NTS	-

GEORGE A. BROWN LICENSE No 56076 STATE OF FLORIDA PROFESSIONAL ENGINEER
10/30/19

REV	ISSUED FOR	DATE	BY
1	100% SET FOR PERMITTING	2/15/19	GAB

PROJECT ENGINEER:	L.Z.M.
DESIGNED BY:	A.H.
DRAWN BY:	G.B.
CHECKED BY:	G.A.B.

IF THIS BAR DOES NOT MEASURE 1" THEN DRAWING IS NOT TO FULL SCALE 0 1/2" 1"

GEORGE A. BROWN, PE NO. 56076

Hazen

HAZEN AND SAWYER
4000 HOLLYWOOD BOULEVARD, SUITE 750N
HOLLYWOOD, FLORIDA 33021
CERTIFICATE OF AUTHORIZATION NO. : 2771

CITY OF HALLANDALE BEACH

WATER TREATMENT PLANT TRANSFER PUMP REPLACEMENT

Hallandale Beach PROGRESS. INNOVATION. EXPERIENCE IT

CIVIL DETAILS SHEET 1

DATE:	OCTOBER 2019
HAZEN NO.:	40621-001
CONTRACT NO.:	1
DRAWING NUMBER:	C-05

BID SET

File: C:\BMS\HAZEN-PW\DMS37873\C-05 Saved By: USJAR50 Save Date: 2019/02/13 10:45 AM
PLOT DATE: 2019/10/24 3:41:44 PM BY: TBOCAS

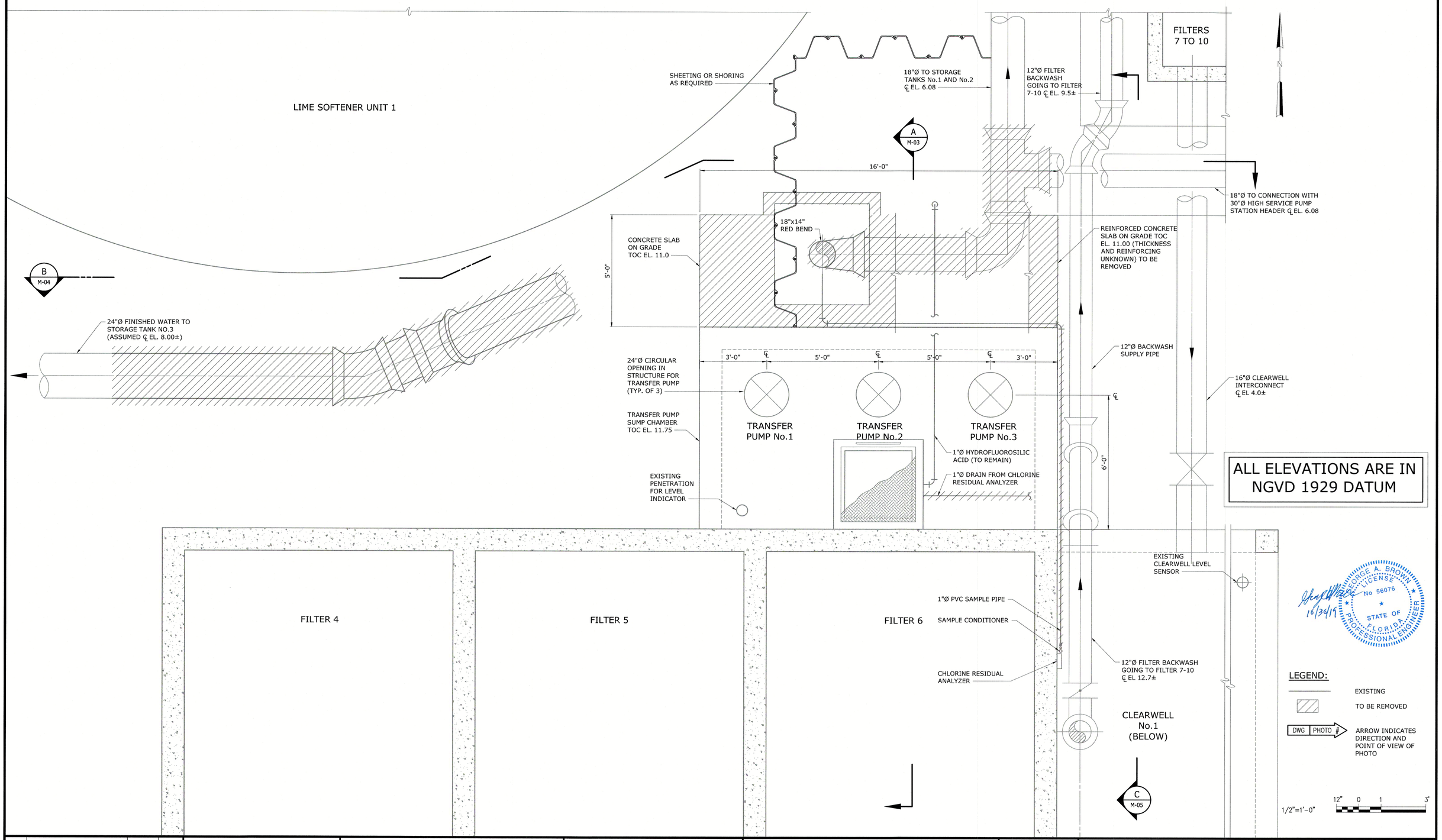

REV	ISSUED FOR	DATE	BY
1	100% SET FOR PERMITTING	2/15/19	GAB

PROJECT ENGINEER:	L.Z.M.
DESIGNED BY:	A.H.
DRAWN BY:	G.B.
CHECKED BY:	G.A.B.

IF THIS BAR DOES NOT MEASURE 1" THEN DRAWING IS NOT TO FULL SCALE 0 1/2" 1"

GEORGE A. BROWN, PE NO. 56076

Hazen

HAZEN AND SAWYER
4000 HOLLYWOOD BOULEVARD, SUITE 750N
HOLLYWOOD, FLORIDA 33021
CERTIFICATE OF AUTHORIZATION NO. : 2771

CITY OF HALLANDALE BEACH

WATER TREATMENT PLANT
TRANSFER PUMP REPLACEMENT

Hallandale Beach
PROGRESS. INNOVATION. OPPORTUNITY

TRANSFER PUMPS
DEMOLITION PLAN
AT EL. 14.00

DATE:	OCTOBER 2019
HAZEN NO.:	40621-001
CONTRACT NO.:	1
DRAWING NUMBER:	M-01

BID SET

File: C:\BMS\HAZEN-PW\DMS7881\M-01 Saved By: USJARIO Save Date: 2019/02/13 11:48 AM
PLOT DATE: 2019/10/24 3:45:03 PM BY: TBOCAS

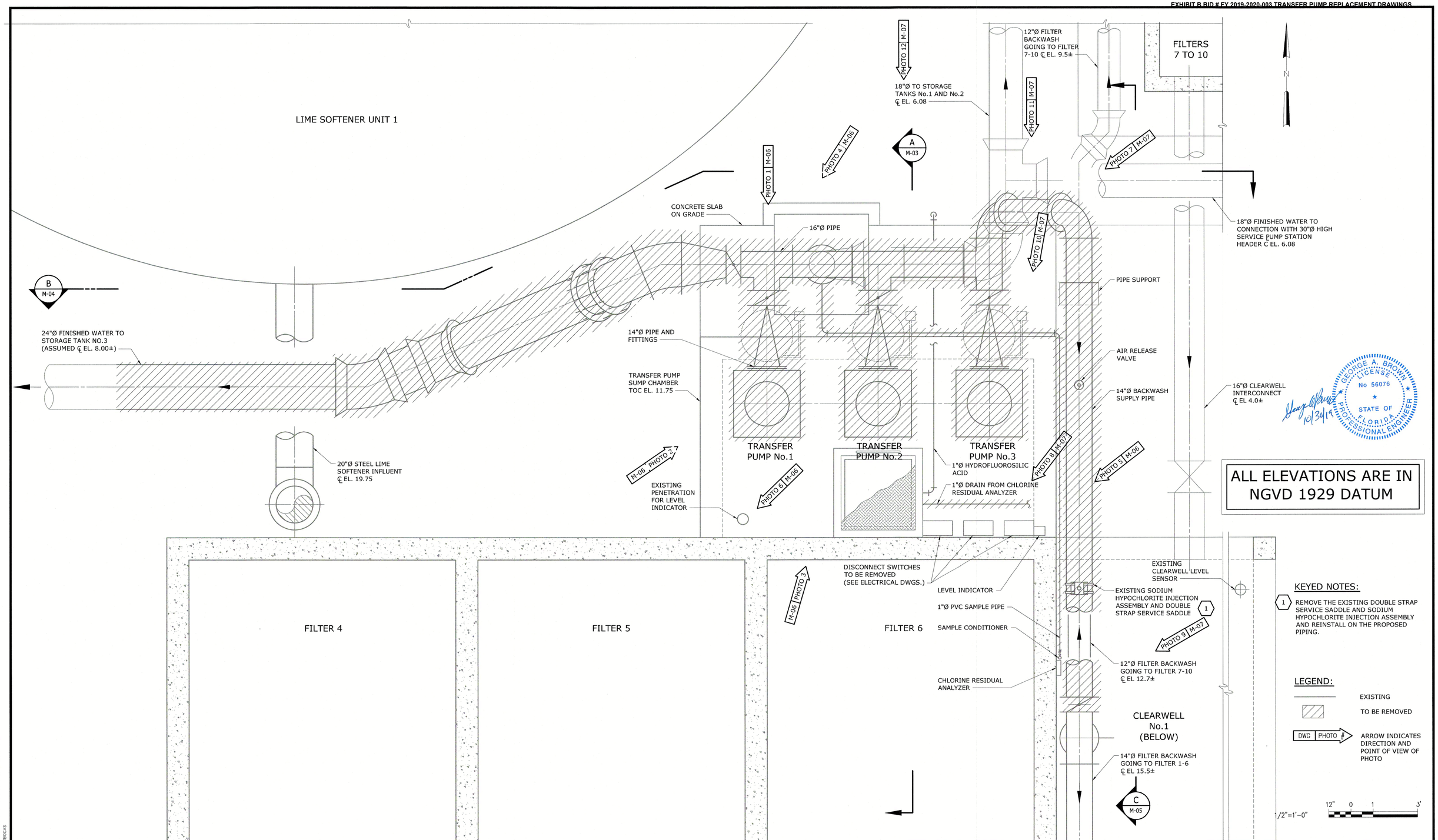

REV	ISSUED FOR	DATE	BY
1	100% SET FOR PERMITTING	2/15/19	GAB

PROJECT ENGINEER:	L.Z.M.
DESIGNED BY:	A.H.
DRAWN BY:	G.B.
CHECKED BY:	G.A.B.

IF THIS BAR DOES NOT MEASURE 1" THEN DRAWING IS NOT TO FULL SCALE (0 1/2" 1")

GEORGE A. BROWN, PE NO. 56076

Hazen

HAZEN AND SAWYER
4000 HOLLYWOOD BOULEVARD, SUITE 750N
HOLLYWOOD, FLORIDA 33021
CERTIFICATE OF AUTHORIZATION NO. : 2771

CITY OF HALLANDALE BEACH

WATER TREATMENT PLANT
TRANSFER PUMP REPLACEMENT

Hallandale Beach
PROGRESS. INNOVATION. OPPORTUNITY.

TRANSFER PUMPS
DEMOLITION PLAN
AT EL. 20.00

DATE:	OCTOBER 2019
HAZEN NO.:	40621-001
CONTRACT NO.:	1
DRAWING NUMBER:	M-02

BID SET

File: C:\BMS\HAZEN-PW\DMS23981\M-02 Saved By: USUARIO Save Date: 2019/02/13 11:47 AM
PLOT DATE: 2019/10/24 3:45:08 PM BY: TBROAS

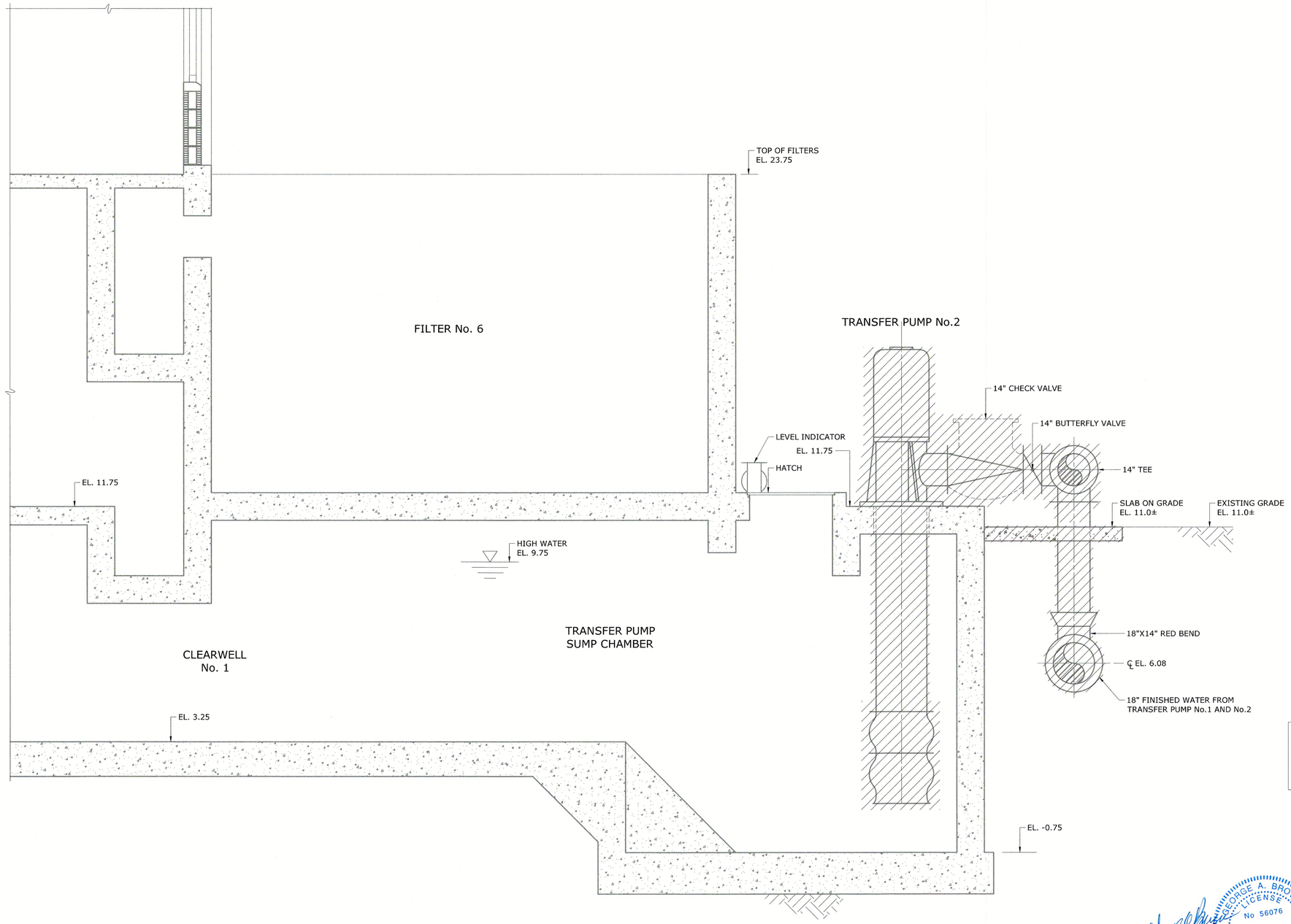

ALL ELEVATIONS ARE IN NGVD 1929 DATUM

LEGEND:

TO BE REMOVED

EXISTING

SECTION A/M-01 A/M-02
1/2" = 1'-0"

6/30/19

GEORGE A. BROWN LICENSE No 56076 STATE OF FLORIDA PROFESSIONAL ENGINEER

1/2"=1'-0" 12" 0 1 3'

REV	ISSUED FOR	DATE	BY
1	100% SET FOR PERMITTING	2/15/19	GAB

PROJECT ENGINEER:	L.Z.M.
DESIGNED BY:	A.H.
DRAWN BY:	G.B.
CHECKED BY:	G.A.B.

IF THIS BAR DOES NOT MEASURE 1" THEN DRAWING IS NOT TO FULL SCALE 0 1/2" 1"

GEORGE A. BROWN, PE NO. 56076

Hazen

HAZEN AND SAWYER
4000 HOLLYWOOD BOULEVARD, SUITE 750N
HOLLYWOOD, FLORIDA 33021
CERTIFICATE OF AUTHORIZATION NO. : 2771

CITY OF HALLANDALE BEACH

WATER TREATMENT PLANT
TRANSFER PUMP REPLACEMENT

Hallandale Beach
PROGRESS. INNOVATION. OPPORTUNITY

TRANSFER PUMPS
DEMOLITION SECTION
SHEET 1

DATE:	OCTOBER 2019
HAZEN NO.:	40621-001
CONTRACT NO.:	1
DRAWING NUMBER:	M-03

BID SET

File: C:\SMS\HAZEN-PW\DMS5788\M-03 Saved By: USUARIO Save Date: 2019/02/13 11:47 AM
PLOT DATE: 2019/10/24 3:45:13 PM BY: TBOCAS

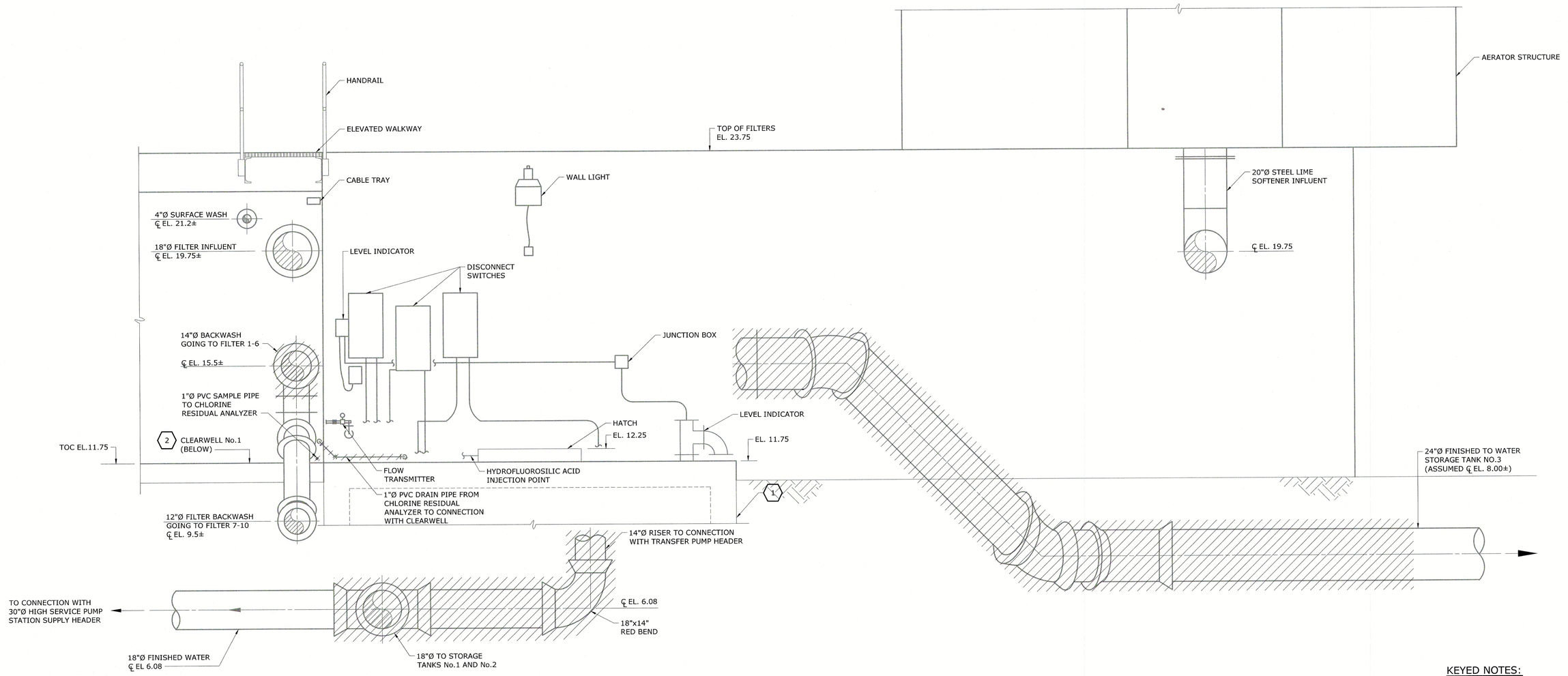

SECTION B/M-01 B/M-02
1/2" = 1'-0"

KEYED NOTES:

1. EXISTING PUMPS AND CERTAIN PIPING ASSOCIATED WITH THE PUMPS IS NOT SHOWN FOR CLARITY
2. CLEARWELL No.1 NOT SHOWN IN SECTION VIEW FOR CLARITY.

LEGEND:

EXISTING

TO BE REMOVED

GEORGE A. BROWN LICENSE No 56076 STATE OF FLORIDA PROFESSIONAL ENGINEER

10/30/19

ALL ELEVATIONS ARE IN NGVD 1929 DATUM

1/2"=1'-0" 12" 0 1 3'

REV	ISSUED FOR	DATE	BY
1	100% SET FOR PERMITTING	2/15/19	GAB

PROJECT ENGINEER:	L.Z.M.
DESIGNED BY:	A.H.
DRAWN BY:	G.B.
CHECKED BY:	G.A.B.

IF THIS BAR DOES NOT MEASURE 1" THEN DRAWING IS NOT TO FULL SCALE 0 1/2" 1"

GEORGE A. BROWN, PE NO. 56076

Hazen

HAZEN AND SAWYER
4000 HOLLYWOOD BOULEVARD, SUITE 750N
HOLLYWOOD, FLORIDA 33021
CERTIFICATE OF AUTHORIZATION NO. : 2771

CITY OF HALLANDALE BEACH

WATER TREATMENT PLANT
TRANSFER PUMP REPLACEMENT

Hallandale Beach
PROGRESS. INNOVATION. OPPORTUNITY

TRANSFER PUMPS
DEMOLITION SECTION
SHEET 2

DATE:	OCTOBER 2019
HAZEN NO.:	40621-001
CONTRACT NO.:	1
DRAWING NUMBER:	M-04

BID SET

File: C:\JMS\HAZEN-PW\JMS2786\M-04 Saved By USJARO Save Date: 2019/02/13 11:47 AM
PLOT DATE: 2019/10/24 3:45:17 PM BY: TBOCAS

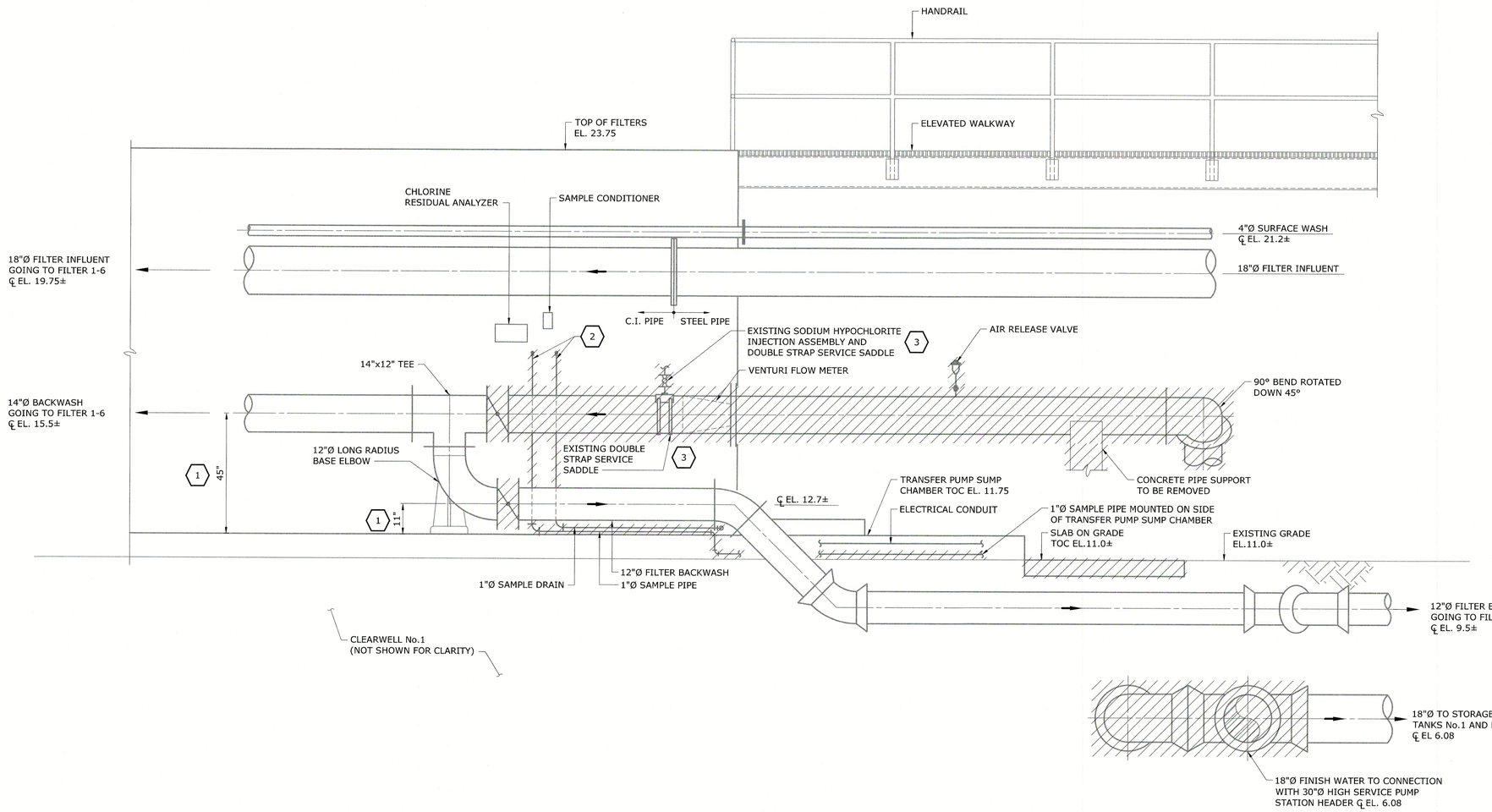

SECTION C/M-01 C/M-02
1/2" = 1'-0"

KEYED NOTES:

1. APPROXIMATE HEIGHT FROM FINISHED FLOOR AS FIELD MEASURED. CONTRACTOR TO VERIFY.
2. PROTECT EXISTING TUBING, ACCESSORIES AND COUPLINGS THAT CONNECT THE SAMPLE PIPE AND DRAIN PIPE TO THE CHLORINE RESIDUAL ANALYZER SAMPLE CONDITIONER.
3. REMOVE THE EXISTING DOUBLE STRAP SERVICE SADDLE AND SODIUM HYPOCHLORITE INJECTION ASSEMBLY AND REINSTALL ON THE PROPOSED PIPING.

NOTES:

1. CLEARWELL CROSS SECTION NOT SHOWN FOR CLARITY.
2. EXISTING PUMPS NOT SHOWN FOR CLARITY.
3. TRANSFER PUMPS DISCHARGE HEADER NOT SHOWN FOR CLARITY.

LEGEND:

EXISTING

TO BE REMOVED

1/2"=1'-0" 12" 0 1 3'

GEORGE A. BROWN LICENSE No 56076 STATE OF FLORIDA PROFESSIONAL ENGINEER

George A. Brown 10/30/19

ALL ELEVATIONS ARE IN NGVD 1929 DATUM

REV	ISSUED FOR	DATE	BY
1	100% SET FOR PERMITTING	2/15/19	GAB

PROJECT ENGINEER:	L.Z.M.
DESIGNED BY:	A.H.
DRAWN BY:	G.B.
CHECKED BY:	G.A.B.

IF THIS BAR DOES NOT MEASURE 1" THEN DRAWING IS NOT TO FULL SCALE 0 1/2" 1"

GEORGE A. BROWN, PE NO. 56076

Hazen

HAZEN AND SAWYER
4000 HOLLYWOOD BOULEVARD, SUITE 750N
HOLLYWOOD, FLORIDA 33021
CERTIFICATE OF AUTHORIZATION NO. : 2771

CITY OF HALLANDALE BEACH

WATER TREATMENT PLANT
TRANSFER PUMP REPLACEMENT

Hallandale Beach

TRANSFER PUMPS
DEMOLITION SECTION
SHEET 3

DATE:	OCTOBER 2019
HAZEN NO.:	40621-001
CONTRACT NO.:	1
DRAWING NUMBER:	M-05

BID SET

File: C:\BMS\HAZEN-PW\DMS57881\M-05 Saved By USUARIO Save Date: 2019/02/13 11:46 AM
PLOT DATE: 2019/10/24 3:45:22 PM BY: TBOCAS

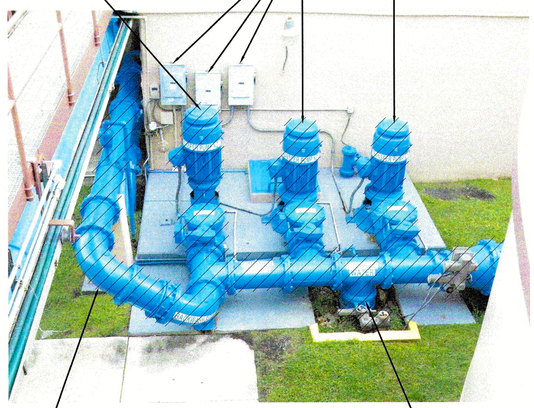

PHOTO 1
NTS

PHOTO 2
NTS

PHOTO 3
NTS

PHOTO 4
NTS

PHOTO 5
NTS

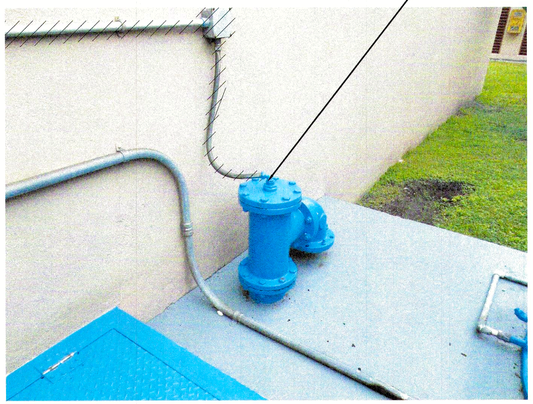

PHOTO 6
NTS

GEORGE A. BROWN
LICENSE
No 56076
STATE OF FLORIDA
PROFESSIONAL ENGINEER
10/30/19

LEGEND:

TO BE REMOVED

REV	ISSUED FOR	DATE	BY
1	100% SET FOR PERMITTING	2/15/19	GAB

PROJECT ENGINEER:	L.Z.M.
DESIGNED BY:	A.H.
DRAWN BY:	G.B.
CHECKED BY:	G.A.B.

IF THIS BAR DOES NOT MEASURE 1" THEN DRAWING IS NOT TO FULL SCALE 0 1/2" 1"

GEORGE A. BROWN, PE NO. 56076

Hazen

HAZEN AND SAWYER
4000 HOLLYWOOD BOULEVARD, SUITE 750N
HOLLYWOOD, FLORIDA 33021
CERTIFICATE OF AUTHORIZATION NO. : 2771

CITY OF HALLANDALE BEACH

WATER TREATMENT PLANT
TRANSFER PUMP REPLACEMENT

Hallandale Beach
PROGRESS. INNOVATION. OPPORTUNITY

TRANSFER PUMPS
DEMOLITION PHOTOS
SHEET 1

DATE:	OCTOBER 2019
HAZEN NO.:	40621-001
CONTRACT NO.:	1
DRAWING NUMBER:	M-06

BID SET

File: C:\BMS\HAZEN-PW\DMS57881\M-06 Saved By USUARIO Save Date: 2019/02/13 11:46 AM
PLOT DATE: 2019/10/24 3:45:31 PM BY: TBOCAS

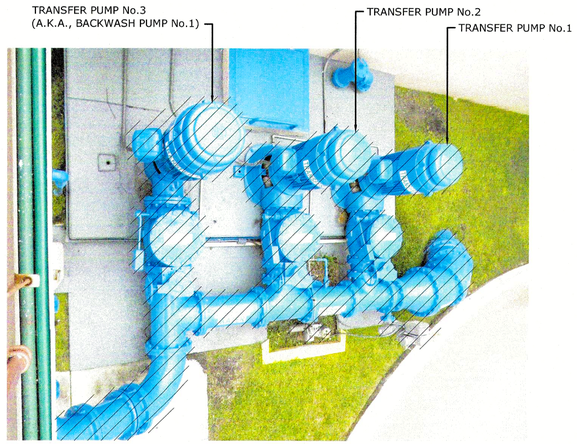

PHOTO 7
NTS

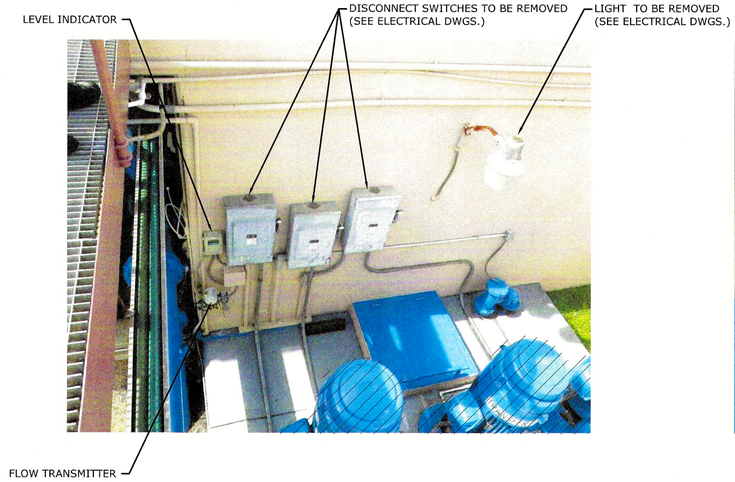

PHOTO 8
NTS

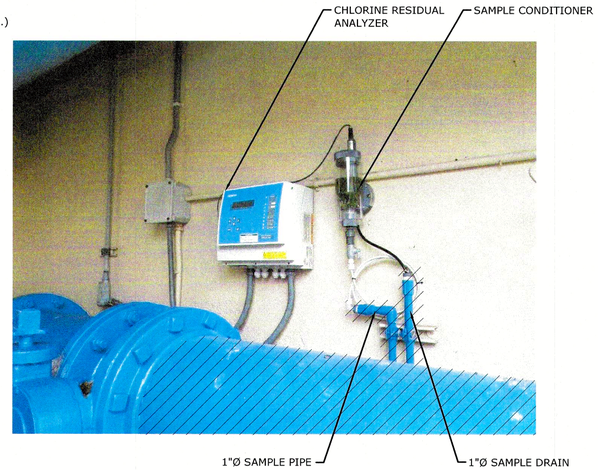

PHOTO 9
NTS

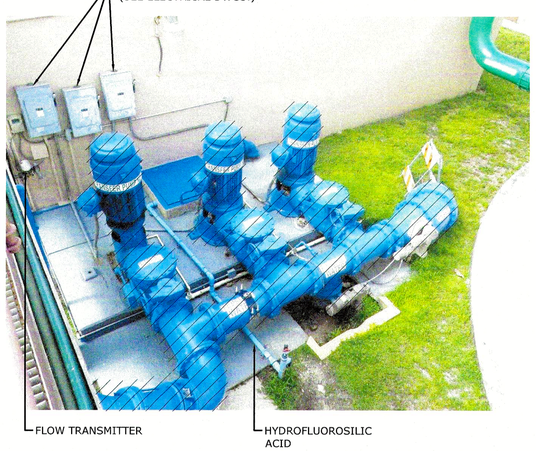

PHOTO10
NTS

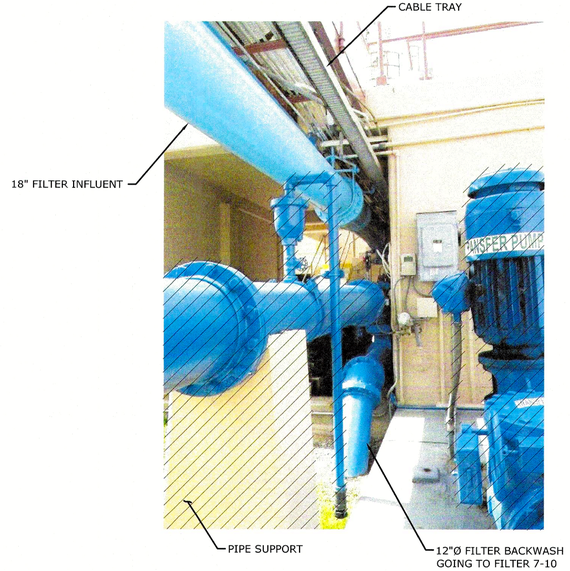

PHOTO 11
NTS

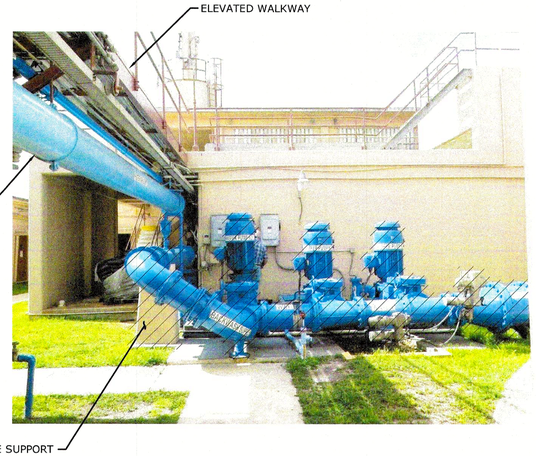

PHOTO 12
NTS

GEORGE A. BROWN
LICENSE
No 56076
STATE OF
FLORIDA
PROFESSIONAL ENGINEER
10/30/19

LEGEND:

TO BE REMOVED

REV	ISSUED FOR	DATE	BY
1	100% SET FOR PERMITTING	2/15/19	GAB

PROJECT ENGINEER:	L.Z.M.
DESIGNED BY:	A.H.
DRAWN BY:	G.B.
CHECKED BY:	G.A.B.

IF THIS BAR DOES NOT MEASURE 1" THEN DRAWING IS NOT TO FULL SCALE 0 1/2" 1"

GEORGE A. BROWN, PE NO. 56076

Hazen

HAZEN AND SAWYER
4000 HOLLYWOOD BOULEVARD, SUITE 750N
HOLLYWOOD, FLORIDA 33021
CERTIFICATE OF AUTHORIZATION NO. : 2771

CITY OF HALLANDALE BEACH

WATER TREATMENT PLANT
TRANSFER PUMP REPLACEMENT

Hallandale Beach
PROGRESS. INNOVATION. OPPORTUNITY

TRANSFER PUMPS
DEMOLITION PHOTOS
SHEET 2

DATE:	OCTOBER 2019
HAZEN NO.:	40621-001
CONTRACT NO.:	1
DRAWING NUMBER:	M-07

BID SET

File: C:\BMS\HAZEN-PW\DMS57881\M-07 Saved By: USUARIO Save Date: 2019/02/13 11:44 AM
PLOT DATE: 2019/10/24 3:45:37 PM BY: TBOCAS

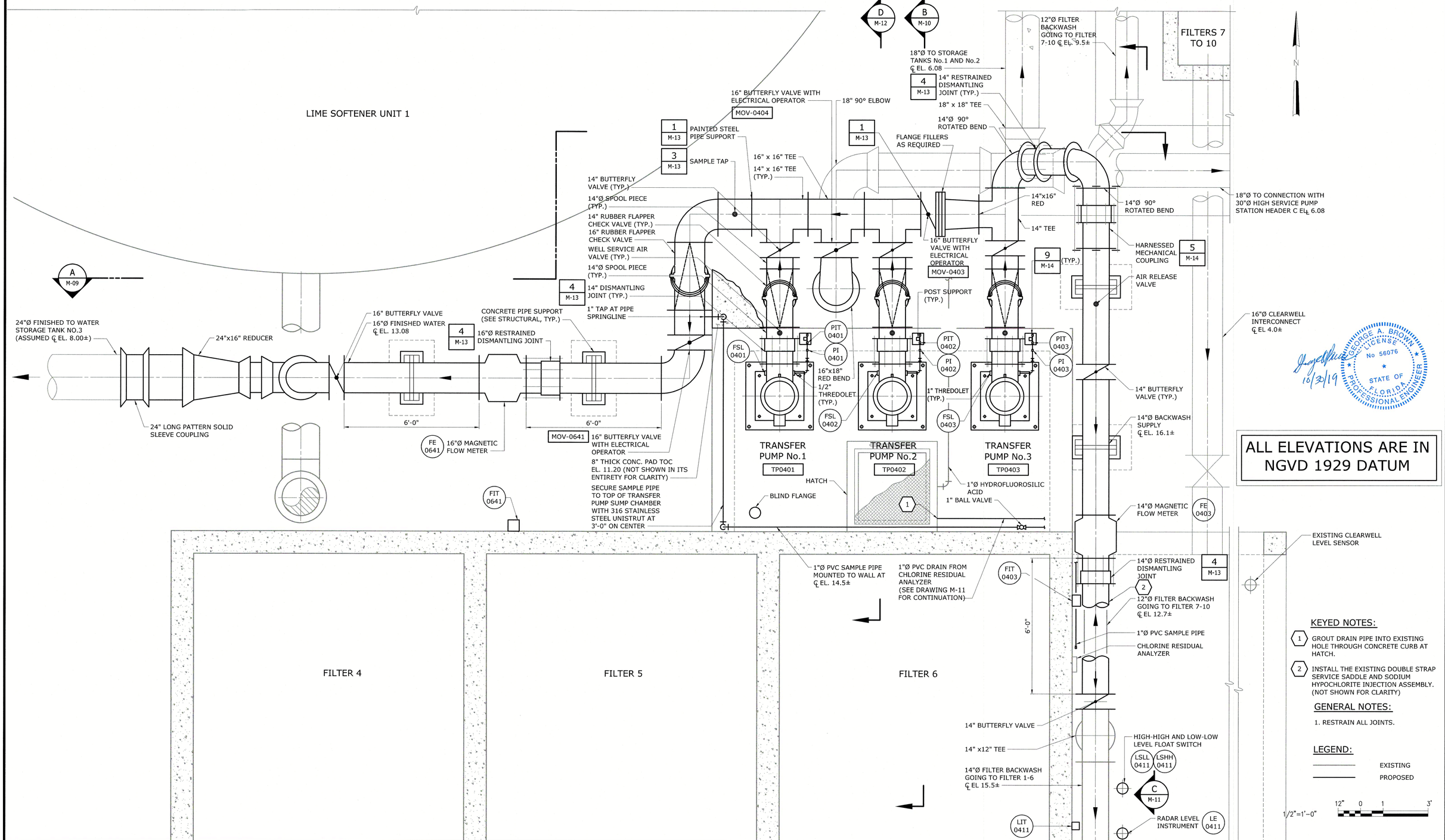

REV	ISSUED FOR	DATE	BY
1	100% SET FOR PERMITTING	2/15/19	GAB

PROJECT ENGINEER:	L.Z.M.
DESIGNED BY:	A.H.
DRAWN BY:	G.B.
CHECKED BY:	G.A.B.

IF THIS BAR DOES NOT MEASURE 1" THEN DRAWING IS NOT TO FULL SCALE 0 1/2" 1"

GEORGE A. BROWN, PE NO. 56076

Hazen

HAZEN AND SAWYER
4000 HOLLYWOOD BOULEVARD, SUITE 750N
HOLLYWOOD, FLORIDA 33021
CERTIFICATE OF AUTHORIZATION NO. : 2771

CITY OF HALLANDALE BEACH

WATER TREATMENT PLANT
TRANSFER PUMP REPLACEMENT

Hallandale Beach PROGRESS, INNOVATION, OPPORTUNITY

TRANSFER PUMPS
PROPOSED PLAN

DATE:	OCTOBER 2019
HAZEN NO.:	40621-001
CONTRACT NO.:	1
DRAWING NUMBER:	M-08

BID SET

File: C:\BMS\HAZEN-PW\DMS57881\M-08 Saved By USUARIO Save Date: 2019/02/13 11:43 AM
PLOT DATE: 2019/10/24 3:45:44 PM BY: TBOCAS

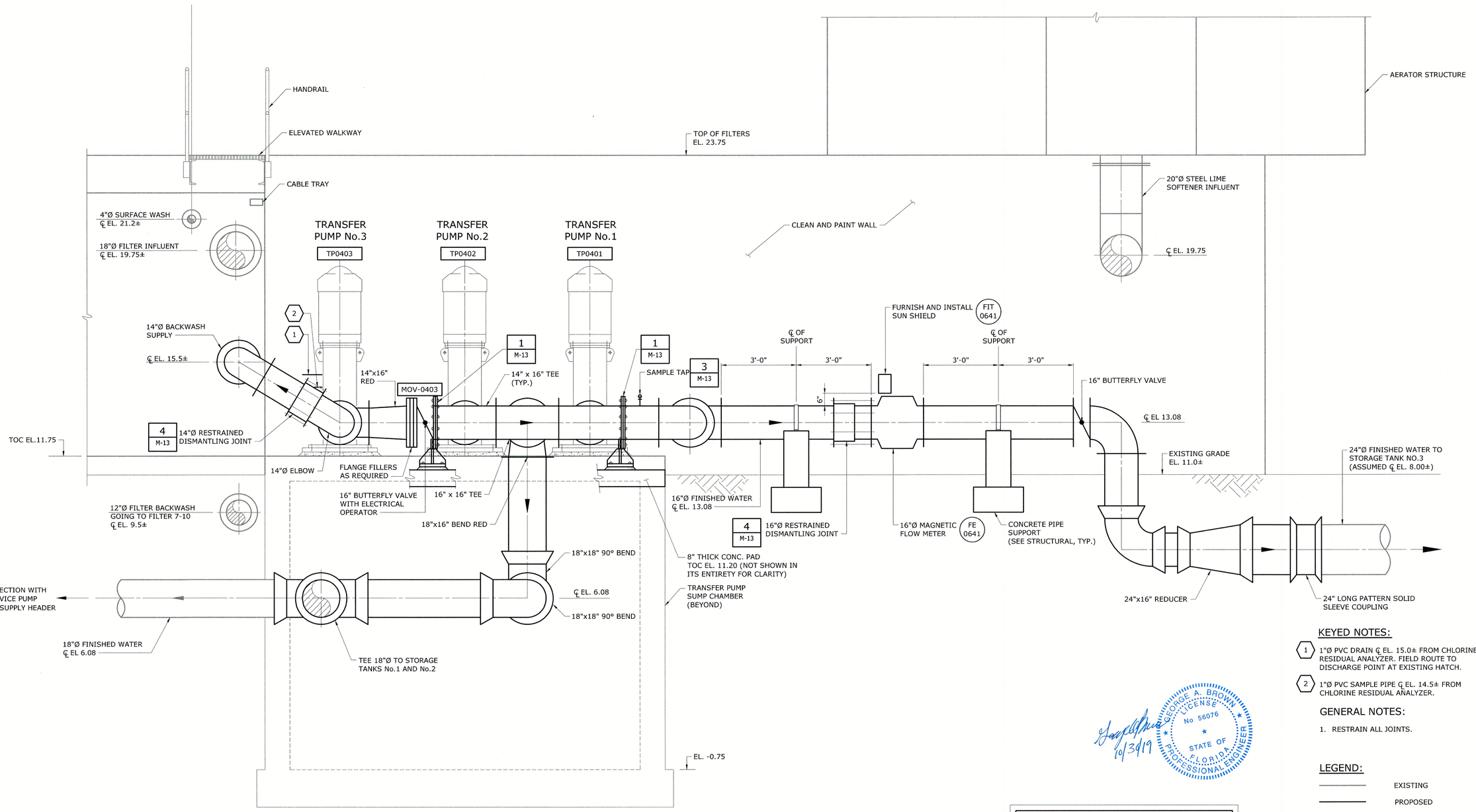

KEYED NOTES:

1. 1"Ø PVC DRAIN ℄ EL. 15.0± FROM CHLORINE RESIDUAL ANALYZER. FIELD ROUTE TO DISCHARGE POINT AT EXISTING HATCH.
2. 1"Ø PVC SAMPLE PIPE ℄ EL. 14.5± FROM CHLORINE RESIDUAL ANALYZER.

GENERAL NOTES:

1. RESTRAIN ALL JOINTS.

LEGEND:

EXISTING

PROPOSED

GEORGE A. BROWN LICENSE No 56076 STATE OF FLORIDA PROFESSIONAL ENGINEER

10/30/19

ALL ELEVATIONS ARE IN NGVD 1929 DATUM

1/2"=1'-0" 12" 0 1 3'

REV	ISSUED FOR	DATE	BY
1	100% SET FOR PERMITTING	2/15/19	GAB

PROJECT ENGINEER:	L.Z.M.
DESIGNED BY:	A.H.
DRAWN BY:	G.K.
CHECKED BY:	G.A.B.

IF THIS BAR DOES NOT MEASURE 1" THEN DRAWING IS NOT TO FULL SCALE 0 1/2" 1"

GEORGE A. BROWN, PE NO. 56076

Hazen

HAZEN AND SAWYER
4000 HOLLYWOOD BOULEVARD, SUITE 750N
HOLLYWOOD, FLORIDA 33021
CERTIFICATE OF AUTHORIZATION NO. : 2771

CITY OF HALLANDALE BEACH

WATER TREATMENT PLANT
TRANSFER PUMP REPLACEMENT

Hallandale Beach
PROGRESS. INNOVATION. OPPORTUNITY

TRANSFER PUMPS
PROPOSED SECTION
SHEET 1

DATE:	OCTOBER 2019
HAZEN NO.:	40621-001
CONTRACT NO.:	1
DRAWING NUMBER:	M-09

BID SET

File: C:\BMS\HAZEN-PW\DMS57881\M-09 Saved By USUARIO Save Date: 2019/02/13 11:43 AM
PLOT DATE: 2019/10/24 3:45:49 PM BY: TBOCAS

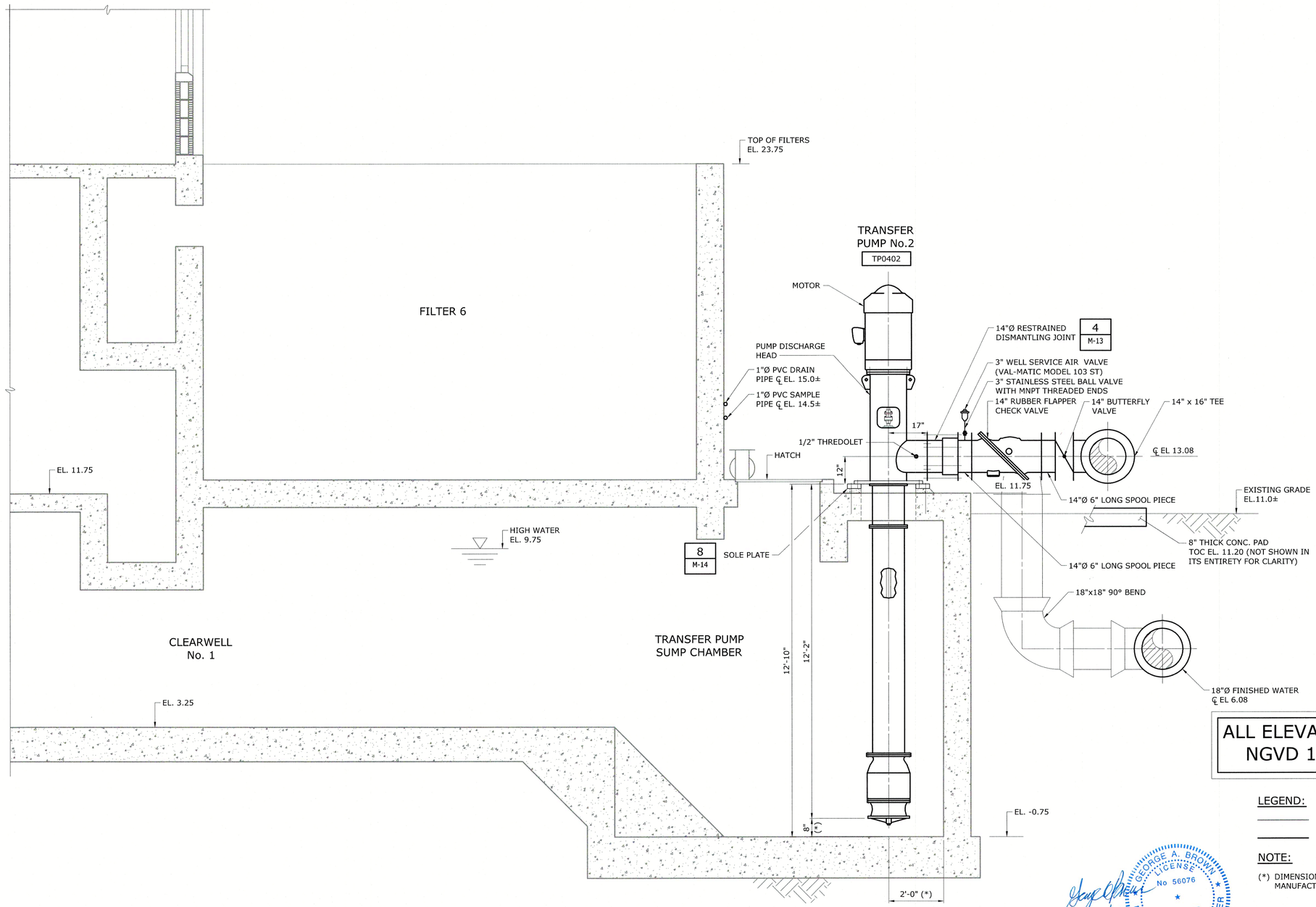

ALL ELEVATIONS ARE IN NGVD 1929 DATUM

LEGEND:

EXISTING

PROPOSED

NOTE:

(*) DIMENSION TO BE VERIFIED WITH PUMP MANUFACTURER.

SECTION B M-08
1/2" = 1'-0"

1/2"=1'-0"

12" 0 1 3'

GEORGE A. BROWN LICENSE No 56076 STATE OF FLORIDA PROFESSIONAL ENGINEER

10/30/19

REV	ISSUED FOR	DATE	BY
1	100% SET FOR PERMITTING	2/15/19	GAB

PROJECT ENGINEER:	L.Z.M.
DESIGNED BY:	A.H.
DRAWN BY:	G.K.
CHECKED BY:	G.A.B.

IF THIS BAR DOES NOT MEASURE 1" THEN DRAWING IS NOT TO FULL SCALE 0 1/2" 1"

GEORGE A. BROWN, PE NO. 56076

Hazen

HAZEN AND SAWYER
4000 HOLLYWOOD BOULEVARD, SUITE 750N
HOLLYWOOD, FLORIDA 33021
CERTIFICATE OF AUTHORIZATION NO. : 2771

CITY OF HALLANDALE BEACH

WATER TREATMENT PLANT
TRANSFER PUMP REPLACEMENT

Hallandale Beach
PROGRESS. INNOVATION. OPPORTUNITY

TRANSFER PUMPS
PROPOSED SECTION
SHEET 2

DATE:	OCTOBER 2019
HAZEN NO.:	40621-001
CONTRACT NO.:	1
DRAWING NUMBER:	M-10

BID SET

File: C:\BMS\HAZEN-PW\DMS7588\M-10 Saved By: USUARIO Save Date: 2019/02/13 11:43 AM
PLOT DATE: 2019/10/24 3:45:54 PM BY: TBOCAS

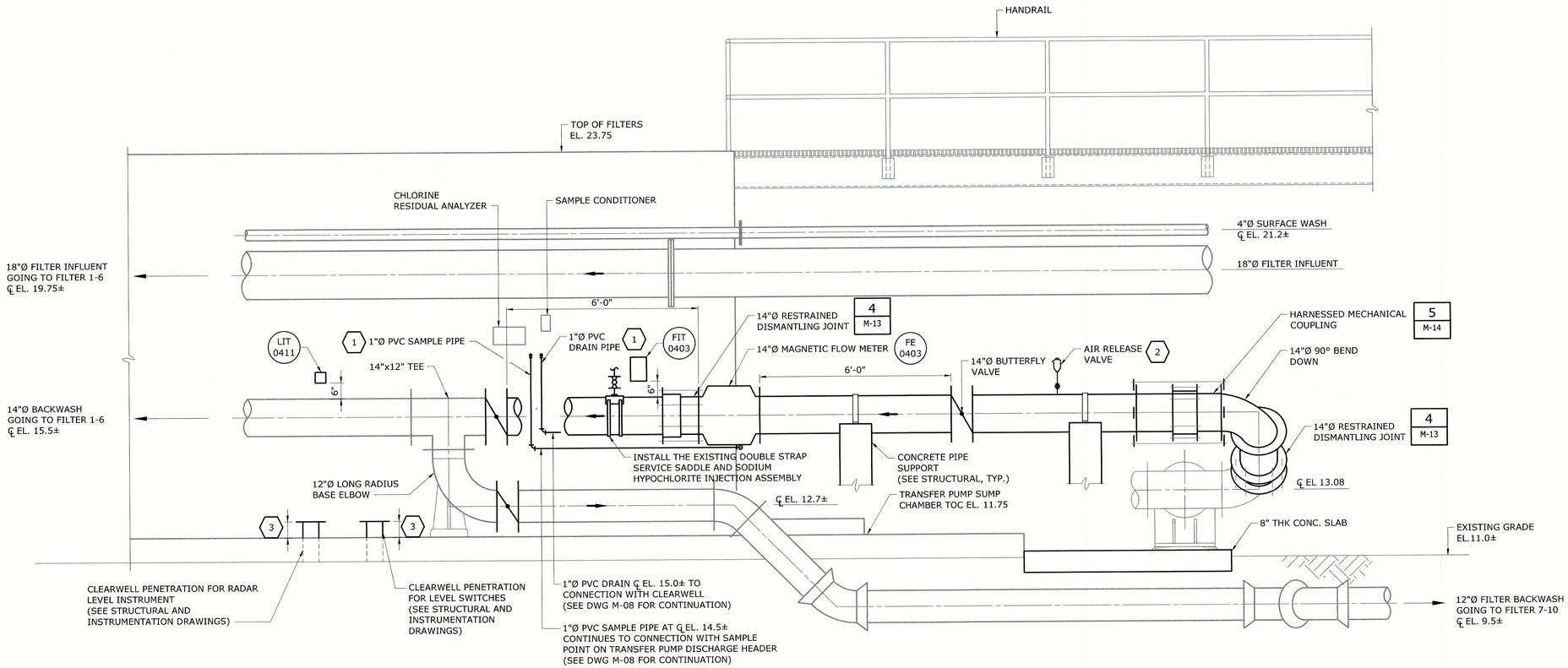

SECTION C / M-08
1/2" = 1'-0"

GEORGE A. BROWN LICENSE No 56076 STATE OF FLORIDA PROFESSIONAL ENGINEER
10/30/19

NOTES:

1. CLEARWELL CROSS SECTION AND PUMPS NOT SHOWN FOR CLARITY

LEGEND:

EXISTING

PROPOSED

KEYED NOTES:

1. PROVIDE ALL ACCESSORIES, TUBING AND COUPLINGS TO CONNECT TO THE CHLORINE RESIDUAL ANALYZER SAMPLE CONDITIONER.
2. ROUTE 1"Ø 316 STAINLESS STEEL SCHEDULE 10S DRAIN LINE FROM AIR RELEASE VALVE TO 6" ABOVE GRADE.
3. HEIGHT AS REQUIRED BY INSTRUMENT MANUFACTURER. SEE INSTRUMENTATION DETAILS.

ALL ELEVATIONS ARE IN NGVD 1929 DATUM

1/2"=1'-0" 12" 0 1 3'

REV	ISSUED FOR	DATE	BY
1	100% SET FOR PERMITTING	2/15/19	GAB

PROJECT ENGINEER:	L.Z.M.
DESIGNED BY:	A.H.
DRAWN BY:	G.B.
CHECKED BY:	G.A.B.

IF THIS BAR DOES NOT MEASURE 1" THEN DRAWING IS NOT TO FULL SCALE 0 1/2" 1"

GEORGE A. BROWN, PE NO. 56076

Hazen
HAZEN AND SAWYER
4000 HOLLYWOOD BOULEVARD, SUITE 750N
HOLLYWOOD, FLORIDA 33021
CERTIFICATE OF AUTHORIZATION NO. : 2771

CITY OF HALLANDALE BEACH

WATER TREATMENT PLANT
TRANSFER PUMP REPLACEMENT

Hallandale Beach
PROSPECTS. INNOVATION. OPPORTUNITY

TRANSFER PUMPS
PROPOSED SECTION
SHEET 3

DATE:	OCTOBER 2019
HAZEN NO.:	40621-001
CONTRACT NO.:	1
DRAWING NUMBER:	M-11

BID SET

File: C:\BMS\HAZEN-FW\OM557881\M-11 Saved By USLAR0 Save Date: 2019/02/13 11:42 AM
PLOT DATE: 2019/10/24 3:45:58 PM BY: TBDCAS

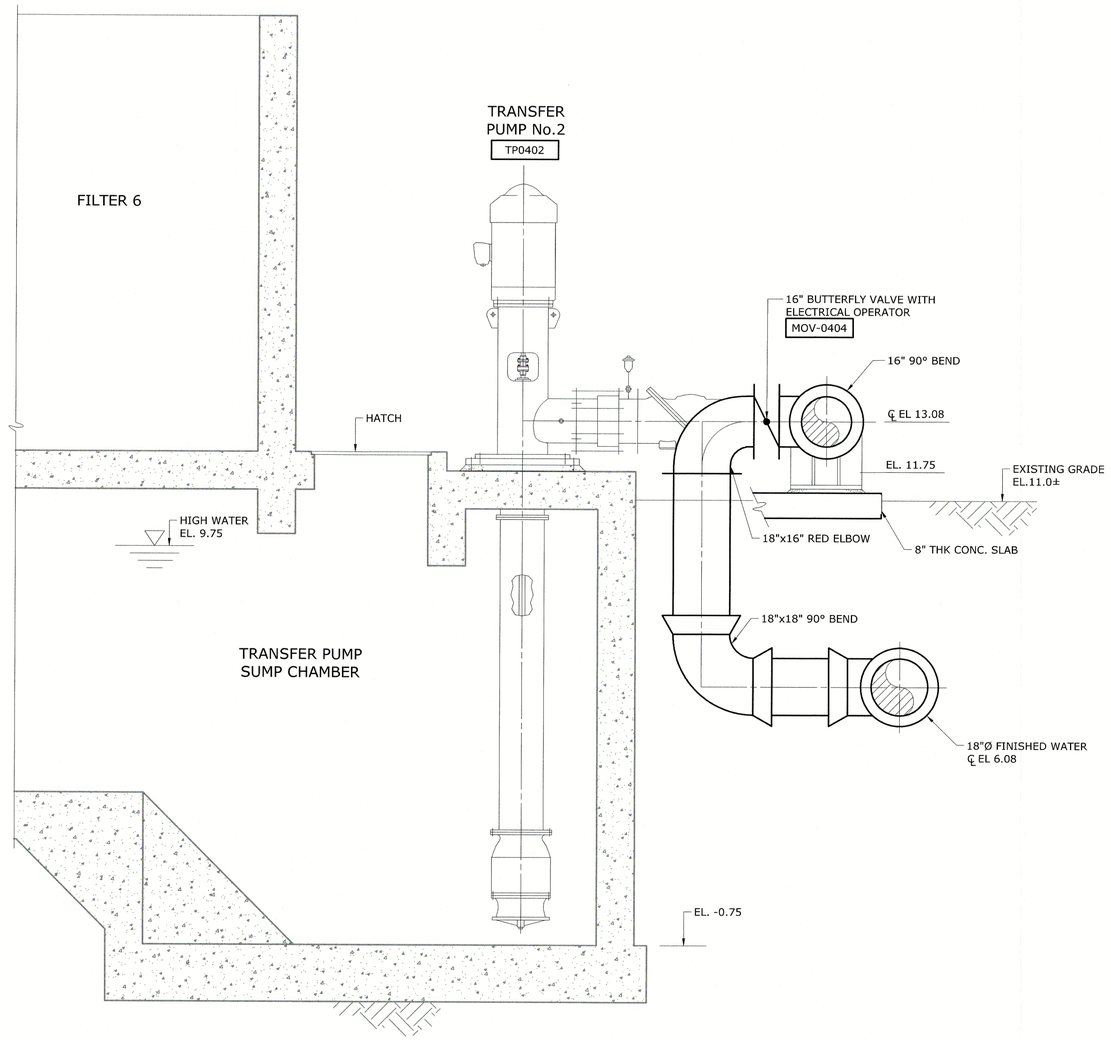

SECTION D / M-08
1/2" = 1'-0"

10/30/19

GEORGE A. BROWN LICENSE No 56076 STATE OF FLORIDA PROFESSIONAL ENGINEER

ALL ELEVATIONS ARE IN NGVD 1929 DATUM

1/2"=1'-0" 12" 0 1 3'

REV	ISSUED FOR	DATE	BY
1	100% SET FOR PERMITTING	2/15/19	GAB

PROJECT ENGINEER:	L.Z.M.
DESIGNED BY:	F.A.M.
DRAWN BY:	G.B.
CHECKED BY:	
IF THIS BAR DOES NOT MEASURE 1" THEN DRAWING IS NOT TO FULL SCALE	0 1/2" 1"

GEORGE A. BROWN, PE NO. 56076

Hazen

HAZEN AND SAWYER
4000 HOLLYWOOD BOULEVARD, SUITE 750N
HOLLYWOOD, FLORIDA 33021
CERTIFICATE OF AUTHORIZATION NO. : 2771

CITY OF HALLANDALE BEACH

WATER TREATMENT PLANT
TRANSFER PUMP REPLACEMENT

Hallandale Beach
PASSION, INNOVATION, OPPORTUNITY

TRANSFER PUMPS
PROPOSED SECTION
SHEET 4

DATE:	OCTOBER 2019
HAZEN NO.:	40621-001
CONTRACT NO.:	1
DRAWING NUMBER:	M-12

BID SET

File: C:\BMS\HAZEN-PW\DMS2788\M-12 Saved By USUARIO Save Date: 2019/02/13 11:42 AM
PLOT DATE: 2019/10/24 3:46:03 PM BY: TBOCAS

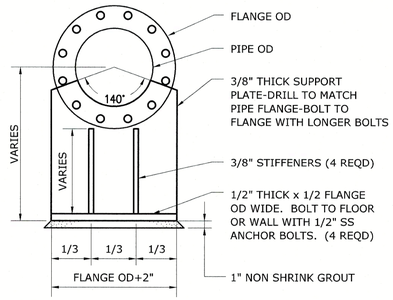

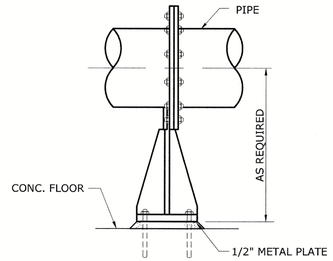

PAINTED STEEL PIPE SUPPORT AT FLANGE - ELEVATION VIEW

DETAIL 1
NTS -

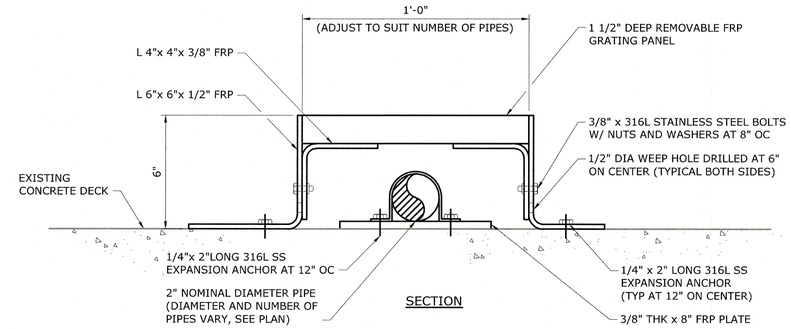

PIPE CHASE

DETAIL 2
NTS -

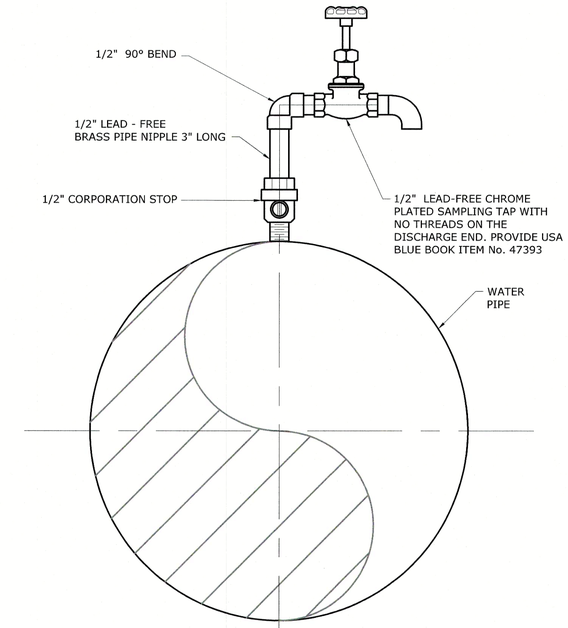

SAMPLE TAP

DETAIL 3
NTS -

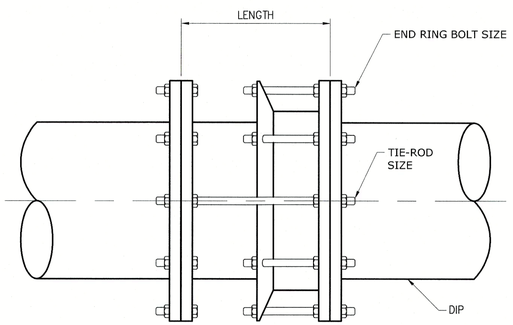

PIPE SIZE	LENGTH			END RING BOLTS		TIE RODS		
	NOM.	MIN.	MAX.	QTY.	SIZE	SIZE (UNC)	LENGTH	QTY.
4	8.00	7.00	9.00	4	5/8-11	5/8-11	13.50	2
6	8.38	7.38	9.38	4	3/4-10	3/4-10	15.00	2
8	8.38	7.38	9.38	4	3/4-10	3/4-10	15.00	2
10	10.50	9.50	11.50	6	7/8-9	7/8-9	17.75	2
12	10.50	9.50	11.50	6	7/8-9	7/8-9	17.75	2
14	13.50	12.00	15.00	8	5/8-11	1-8	22.00	2
16	13.50	12.00	15.00	10	5/8-11	1-8	22.00	2
18	13.75	12.25	15.25	10	5/8-11	1 1/8-7	23.25	2
20	13.75	12.25	15.25	12	5/8-11	1 1/8-7	23.25	2
24	14.25	12.75	15.75	14	5/8-11	1 1/4-7	25.50	2
30	14.75	13.25	16.25	16	5/8-11	1 1/4-7	25.50	4
36	15.75	14.25	17.25	18	5/8-11	1 1/2-6	27.50	4

RESTRAINED DISMANTLING JOINT

DETAIL 4
NTS -

LEGEND:

EXISTING

PROPOSED

GEORGE A. BROWN LICENSE No 56076 STATE OF FLORIDA PROFESSIONAL ENGINEER

10/31/19

REV	ISSUED FOR	DATE	BY
1	100% SET FOR PERMITTING	2/15/19	GAB

PROJECT ENGINEER: L.Z.M.
DESIGNED BY: A.H.
DRAWN BY: G.B.
CHECKED BY: G.A.B.

IF THIS BAR DOES NOT MEASURE 1" THEN DRAWING IS NOT TO FULL SCALE 0 1/2" 1"

GEORGE A. BROWN, PE NO. 56076

Hazen

HAZEN AND SAWYER
4000 HOLLYWOOD BOULEVARD, SUITE 750N
HOLLYWOOD, FLORIDA 33021
CERTIFICATE OF AUTHORIZATION NO. : 2771

CITY OF HALLANDALE BEACH

WATER TREATMENT PLANT
TRANSFER PUMP REPLACEMENT

Hallandale Beach

MECHANICAL DETAILS
SHEET 1

DATE: OCTOBER 2019
HAZEN NO.: 40621-001
CONTRACT NO.: 1
DRAWING NUMBER: M-13

BID SET

File: C:\BMS\HAZEN-PW\DMS57881\M-13 Saved By: LISUARIO Save Date: 2019/02/13 11:42 AM
PLOT DATE: 2019/10/24 3:46:07 PM BY: TBOCAS

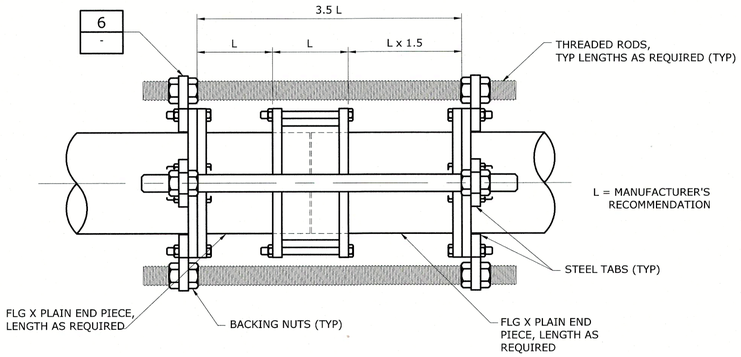

NOTES:

1. ALL FLEXIBLE COUPLINGS SHALL BE HARNESSED AND BACK BOLTED TO PREVENT MOVEMENT IN EITHER DIRECTION.
2. SEE THREADED ROD SCHEDULE FOR ROD DIAMETER, MATERIAL AND STEEL TAB THICKNESS.
3. THREADED RODS SHALL BE BOLTED TO TABS ON FLANGED PIPE JOINTS OR DUCTILE IRON HARNESS RING FACTORY WELDED TO PIPE.

HARNESSED MECHANICAL COUPLING

DETAIL 5
NTS -

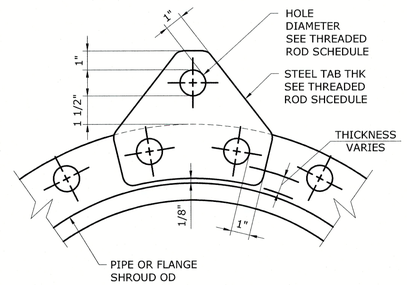

STEEL TAB

DETAIL 6
NTS -

THREADED ROD SCHEDULE

DESIGN PRESSURE (DIMENSIONS IN INCHES)

PIPE SIZE	50 PSI RODS NO-DIA	50 PSI TAB THK	100 PSI RODS NO-DIA	100 PSI TAB THK	150 PSI RODS NO-DIA	150 PSI TAB THK	200 PSI RODS NO-DIA	200 PSI TAB THK	250 PSI RODS NO-DIA	250 PSI TAB THK	300 PSI RODS NO-DIA	300 PSI TAB THK	350 PSI RODS NO-DIA	350 PSI TAB THK
4,6	2-3/4	1	2-3/4	1	2-3/4	1	2-3/4		2-3/4	1	2-3/4	1	2-3/4	1
8	2-3/4	1 1/4	2-3/4	1 1/4	2-3/4	1 1/4	2-3/4	1 1/4	2-3/4	1 1/4	4-3/4	1 1/4	4-3/4	1 1/4
10	2-3/4	1 1/4	2-3/4	1 1/4	2-3/4	1 1/4	4-3/4	1 1/4	4-3/4	1 1/4	4-3/4	1 1/4	4-3/4	1 1/4
12	2-3/4	1 1/4	2-3/4	1 1/4	4-3/4	1 1/4	4-3/4	1 1/4	6-3/4	1 1/4	6-3/4	1 1/4	6-3/4	1 1/4
14	2-3/4	1 1/2	4-3/4	1 1/2	4-3/4	1 1/2	4-3/4	1 1/2	4-3/4	1 1/2	6-3/4	1 1/2	4-3/4	1 1/2
16	2-3/4	1 1/2	4-3/4	1 1/2	6-3/4	1 1/2	4-3/4	1 1/2	4-3/4	1 1/2	4-3/4	1 1/2	6-3/4	1 1/2
18	2-3/4	1 3/4	4-3/4	1 3/4	6-3/4	1 3/4	4-3/4	1 3/4	6-3/4	1 3/4	6-3/4	1 3/4	6-3/4	1 3/4
20	4-3/4	1 3/4	4-3/4	1 3/4	4-3/4	1 3/4	4-3/4	1 3/4	6-3/4	1 3/4	6-3/4	1 3/4	8-3/4	1 3/4
24	4-3/4	2	4-3/4	2	6-3/4	2	6-3/4	2	8-3/4	2	10-3/4	2	10-3/4	2
30	4-1	2 1/4	4-1	2 1/4	4-1	2 1/4	6-1	2 1/4	8-1	2 1/4	10-1	2 1/4	10-1	2 1/4
36	4-1	2 1/2	4-1	2 1/2	6-1	2 1/2	8-1	2 1/2	10-1	2 1/2	12-1	2 1/2	12-1	2 1/2
42	4-1 1/4	2 3/4	4-1 1/4	2 3/4	6-1 1/4	2 3/4	8-1 1/4	2 3/4	10-1 1/4	2 3/4	12-1 1/4	2 3/4	12-1 1/4	2 3/4
48	6-1 1/4	2 3/4	4-1 1/4	2 3/4	8-1 1/4	2 3/4	8-1 1/4	2 3/4	12-1 1/4	2 3/4	12-1 1/4	2 3/4	14-1 1/4	2 3/4
54	6-1 1/4	3	6-1 1/4	3	8-1 1/4	3	8-1 1/4	3	14-1 1/4	3	16-1 1/4	3	18-1 1/4	3

1. ASSUME A DESIGN PRESSURE OF 150 PSI.
2. THREADED RODS FOR ALL PIPE DIAMETERS IN THE SHADED AREA SHALL BE ASTM A193 (GRADE B7).
3. ALL OTHER THREADED RODS SHALL BE ASTM A36. ALL TABS SHALL BE ASTM A572 GR50.
4. ASTM A193 (GRADE B7) RODS SHALL BE LABELED AND BUNDLED SEPARATELY.
5. THIS SCHEDULE SHALL APPLY FOR HARNESSED FLANGED ADAPTERS, HARNESSED FLEXIBLE COUPLINGS AND ALL MECHANICAL JOINT COUPLINGS, SLEEVES ETC. THAT ARE REQUIRED TO BE HARNESSED.
6. RODS THREADED AT ENDS (INCLUDING NUTS) SHALL BE EQUALLY SPACED AROUND PIPE BETWEEN ALL MECHANICAL JOINT FITTINGS (TEE, VALVES, BEND, PLUG, ETC.) OR AS OTHERWISE SHOWN ON THE CONTRACT DRAWINGS. THREADED RODS SHALL BE AS SHOWN IN THE THREADED ROD SCHEDULE. SEE NOTE 7
7. RODS, NUTS, ETC., IN CONTACT WITH SOIL SHALL BE PAINTED WITH TWO COATS COAL TAR (MIN 26 DRY MIL THICKNESS) TNEMEC 46-465 HI-BUILD OR EQUAL.

THREADED ROD SCHEDULE

DETAIL 7
NTS -

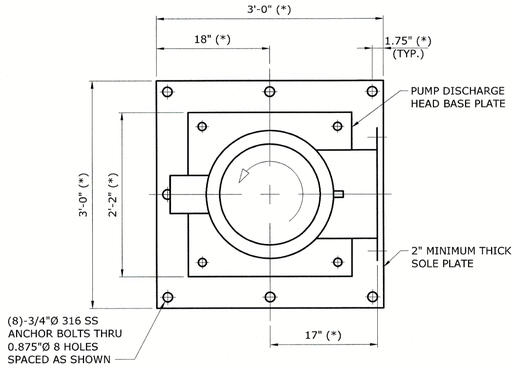

NOTES:

1. BASE PLATE REQUIRES SUPPORT ON ALL 4 SIDES.
2. SEE STRUCTURAL DETAILS.
5. DIMENSION MARKED WITH AN ASTERISK (*) MAY VARY BASED ON PUMP SUPPLIED. THE MAXIMUM DIMENSION SHALL BE COORDINATED BY THE CONTRACTOR TO ENSURE NO CONFLICT WITH THE EXISTING STRUCTURE.

DETAIL 8
1" = 1'-0" M-10

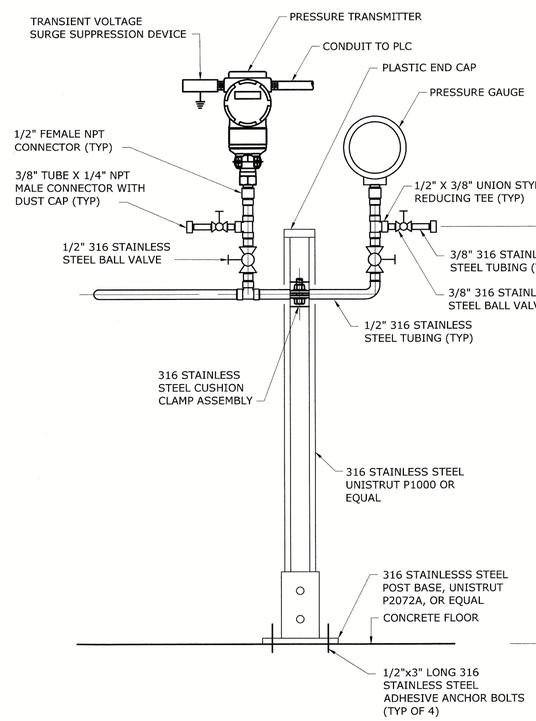

PUMP DISCHARGE

DETAIL 9
NTS -

GEORGE A. BROWN LICENSE No 56076 STATE OF FLORIDA PROFESSIONAL ENGINEER
10/30/19

1"=1'-0" 12" 6 0 1'

REV	ISSUED FOR	DATE	BY
1	100% SET FOR PERMITTING	2/15/19	GAB

PROJECT ENGINEER:	L.Z.M.
DESIGNED BY:	A.H.
DRAWN BY:	G.B.
CHECKED BY:	G.A.B.

IF THIS BAR DOES NOT MEASURE 1" THEN DRAWING IS NOT TO FULL SCALE 0 1/2" 1"

GEORGE A. BROWN, PE NO. 56076

Hazen

HAZEN AND SAWYER
4000 HOLLYWOOD BOULEVARD, SUITE 750N
HOLLYWOOD, FLORIDA 33021
CERTIFICATE OF AUTHORIZATION NO. : 2771

CITY OF HALLANDALE BEACH

WATER TREATMENT PLANT
TRANSFER PUMP REPLACEMENT

Hallandale Beach PROGRESS. INNOVATION. OPPORTUNITY

MECHANICAL DETAILS
SHEET 2

DATE: OCTOBER 2019
HAZEN NO.: 40621-001
CONTRACT NO.: 1
DRAWING NUMBER: M-14

BID SET

File: C:\BMS\HAZEN-PW\MS5788\M-14 Saved By: USUARIO Save Date: 2019/02/19 2:40 PM
P.O.T DATE: 2019/10/24 5:46:11 PM BY: TBDCAS

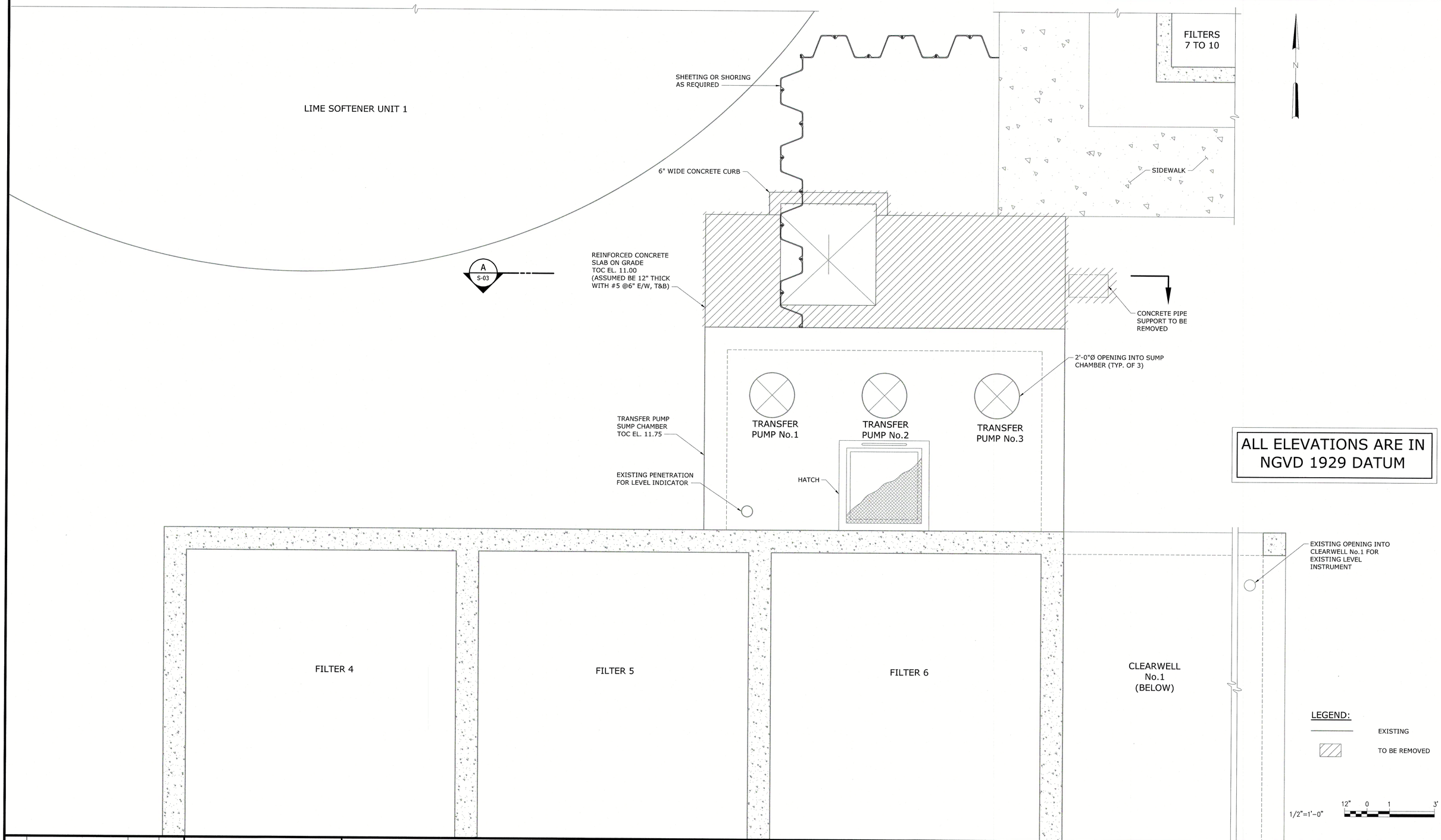

REV	ISSUED FOR	DATE	BY
1	100% SET FOR PERMITTING	2/15/19	GAB

PROJECT ENGINEER:	L.Z.M.
DESIGNED BY:	G.A.B.
DRAWN BY:	G.B.
CHECKED BY:	
IF THIS BAR DOES NOT MEASURE 1" THEN DRAWING IS NOT TO FULL SCALE	0 1/2" 1"

SHAJAN JOYKUTTY LICENSE No 43323 STATE OF FLORIDA PROFESSIONAL ENGINEER

SHAJAN JOYKUTTY, P.E.
No. 43323

Hazen

HAZEN AND SAWYER
4000 HOLLYWOOD BOULEVARD, SUITE 750N
HOLLYWOOD, FLORIDA 33021
CERTIFICATE OF AUTHORIZATION NO. : 2771

CITY OF HALLANDALE BEACH

WATER TREATMENT PLANT
TRANSFER PUMP REPLACEMENT

Hallandale Beach
PROGRESS. INNOVATION. OPPORTUNITY

STRUCTURAL DEMOLITION PLAN

DATE:	OCTOBER 2019
HAZEN NO.:	40621-001
CONTRACT NO.:	1
DRAWING NUMBER:	S-01

BID SET

File: C:\WS\HAZEN-PW\DMS27983\S-01 Saved By USUARIO Save Date: 2019/02/13 3:24 PM
PLOT DATE: 2019/10/24 3:47:42 PM BY: TBOCAS

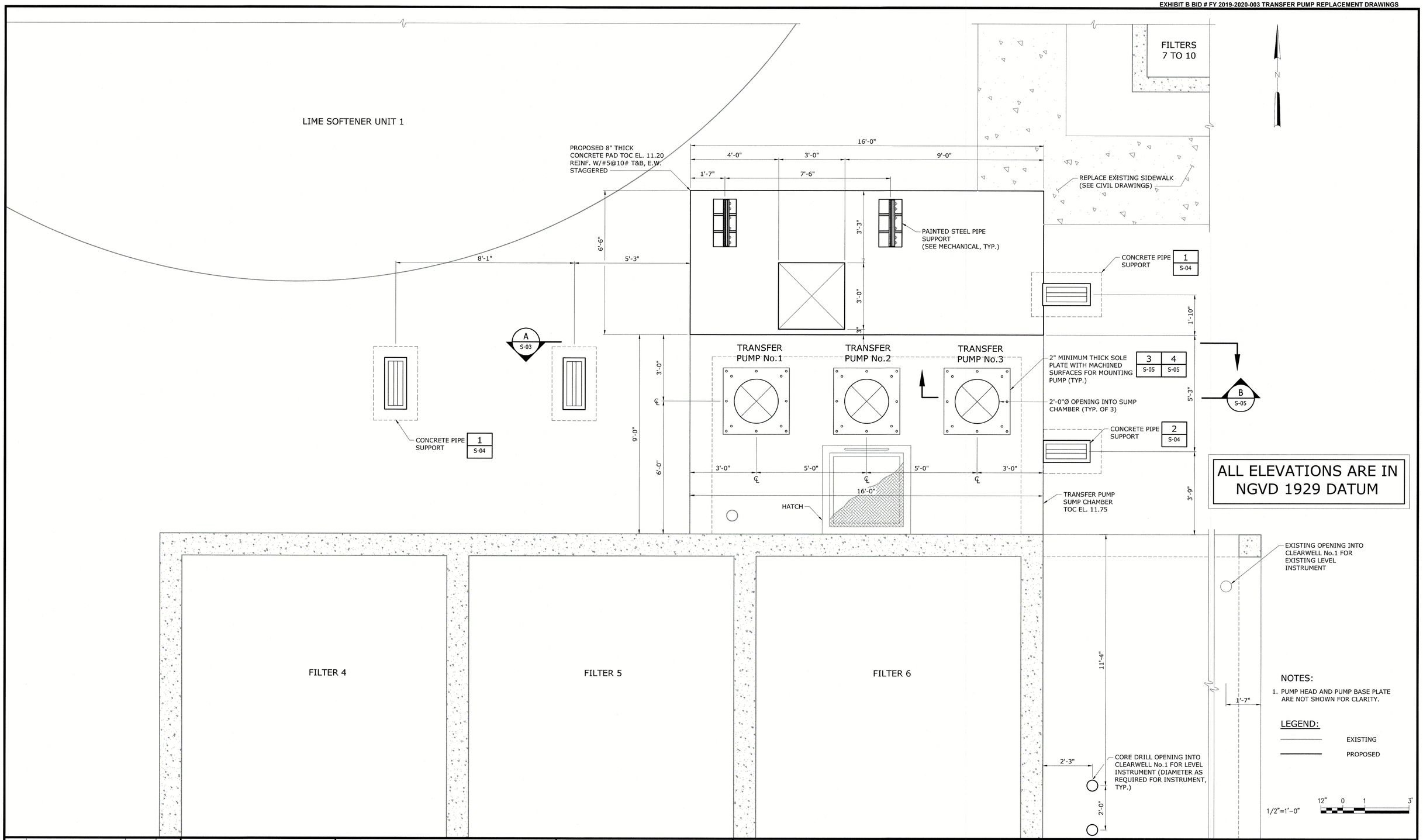

REV	ISSUED FOR	DATE	BY
1	100% SET FOR PERMITTING	2/15/19	GAB

PROJECT ENGINEER:	L.Z.M.
DESIGNED BY:	G.A.B.
DRAWN BY:	G.B.
CHECKED BY:	

IF THIS BAR DOES NOT MEASURE 1" THEN DRAWING IS NOT TO FULL SCALE 0 1/2" 1"

SHAJAN JOYKUTTY LICENSE No 43323 STATE OF FLORIDA PROFESSIONAL ENGINEER

10/2/19

SHAJAN JOYKUTTY, P.E.
No. 43323

Hazen

HAZEN AND SAWYER
4000 HOLLYWOOD BOULEVARD, SUITE 750N
HOLLYWOOD, FLORIDA 33021
CERTIFICATE OF AUTHORIZATION NO. : 2771

CITY OF HALLANDALE BEACH

WATER TREATMENT PLANT
TRANSFER PUMP REPLACEMENT

Hallandale Beach PROGRESS. INNOVATION. OPPORTUNITY

STRUCTURAL PROPOSED PLAN

DATE:	OCTOBER 2019
HAZEN NO.:	40621-001
CONTRACT NO.:	1
DRAWING NUMBER:	S-02

BID SET

File: C:\BMS\HAZEN-PW\DMS27883\S-02 Saved By:USUARIO Save Date: 2019/02/13 3:24 PM
PLOT DATE: 2019/10/24 3:47:49 PM BY: TBDCAS

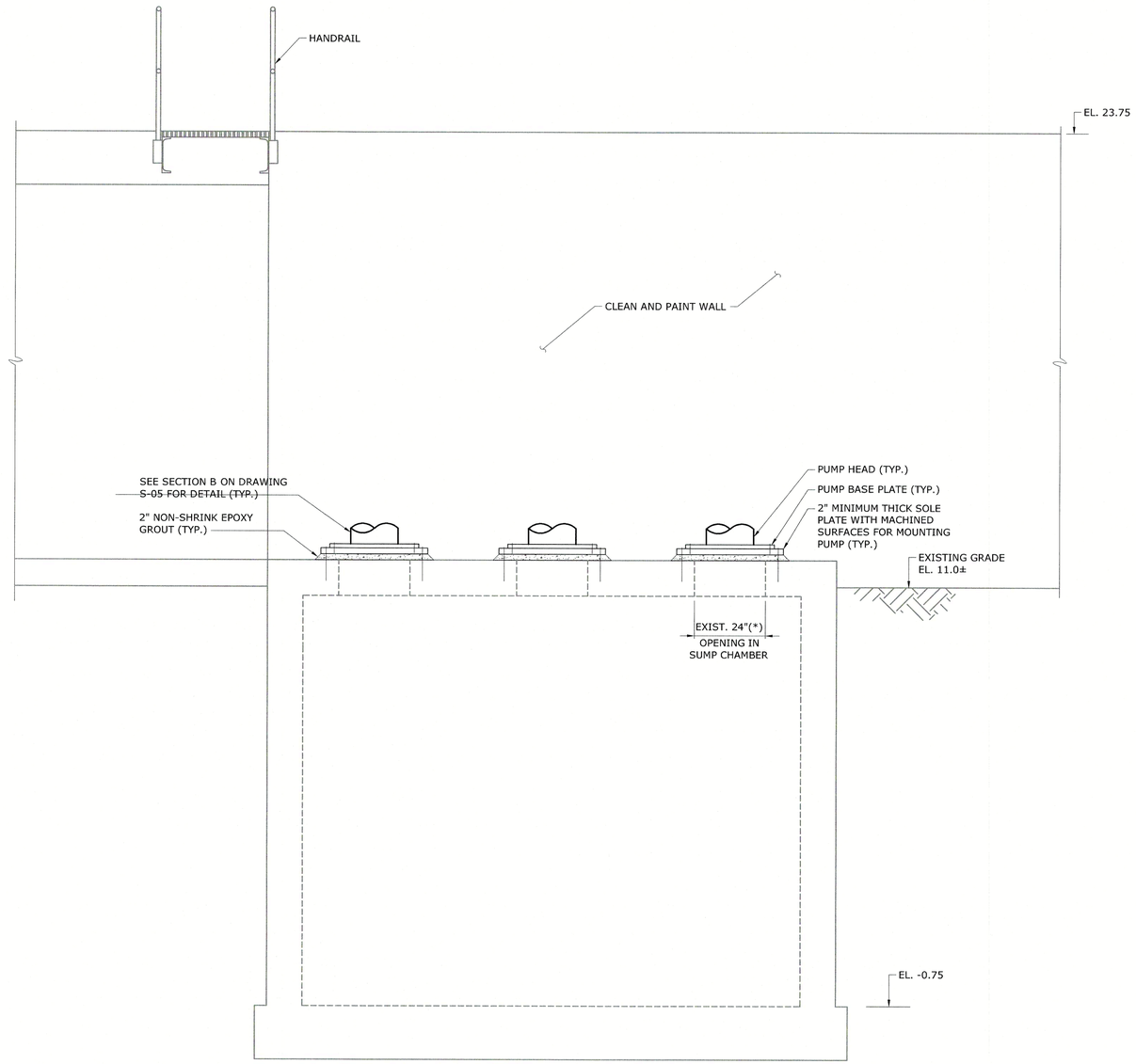

SECTION A S-02
1/2" = 1'-0"

ALL ELEVATIONS ARE IN NGVD 1929 DATUM

LEGEND:

EXISTING

PROPOSED

(*) CONTRACTOR SHALL FIELD VERIFY DIMENSIONS.

1/2"=1'-0" 12" 0 1 3'

REV	ISSUED FOR	DATE	BY
1	100% SET FOR PERMITTING	2/15/19	GAB

PROJECT ENGINEER: L.Z.M.
DESIGNED BY: F.A.M.
DRAWN BY: G.K.
CHECKED BY:
IF THIS BAR DOES NOT MEASURE 1" THEN DRAWING IS NOT TO FULL SCALE 0 1/2" 1"

SHAJAN JOYKUTTY, P.E.
No. 43323

SHAJAN JOYKUTTY LICENSE No 43323 STATE OF FLORIDA PROFESSIONAL ENGINEER
10/28/19

Hazen
HAZEN AND SAWYER
4000 HOLLYWOOD BOULEVARD, SUITE 750N
HOLLYWOOD, FLORIDA 33021
CERTIFICATE OF AUTHORIZATION NO. : 2771

CITY OF HALLANDALE BEACH

WATER TREATMENT PLANT
TRANSFER PUMP REPLACEMENT

Hallandale Beach
PROGRESS. INNOVATION. OPPORTUNITY

STRUCTURAL SECTIONS

DATE: OCTOBER 2019
HAZEN NO.: 40621-001
CONTRACT NO.: 1
DRAWING NUMBER: S-03

BID SET

File: C:\BMS\HAZEN-PW\DMS37883\S-03 Saved By USUARIO Save Date: 2019/02/13 3:25 PM
PLOT DATE: 2019/10/24 3:47:53 PM BY: TBOCAS

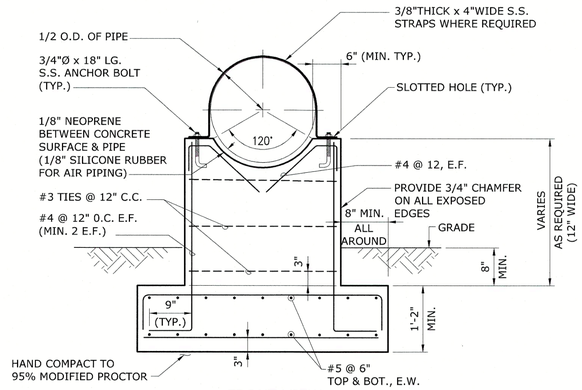

FRONT VIEW

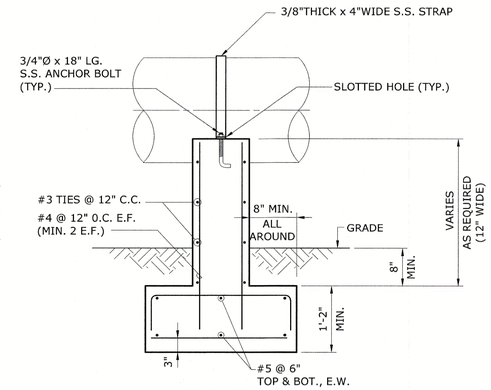

SIDE VIEW

CRADLE TYPE PIPE SUPPORT ON GRADE TYPE 1

DETAIL 1
NTS –

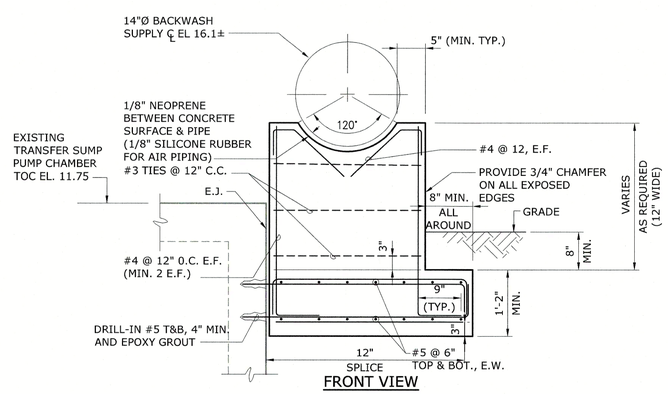

FRONT VIEW

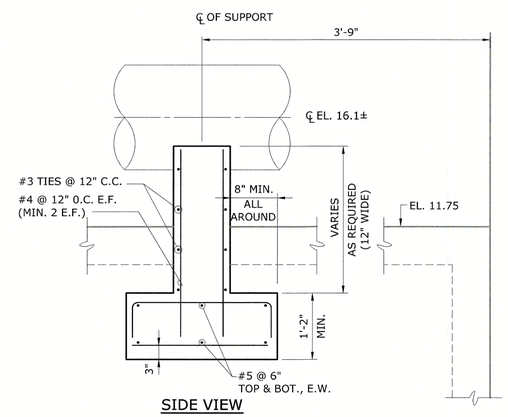

SIDE VIEW

CRADLE TYPE PIPE SUPPORT ON GRADE TYPE 2

DETAIL 2
NTS –

LEGEND

EXISTING
PROPOSED

REV	ISSUED FOR	DATE	BY
1	100% SET FOR PERMITTING	2/15/19	GAB

PROJECT ENGINEER:	L.Z.M.
DESIGNED BY:	F.A.M.
DRAWN BY:	G.K.
CHECKED BY:	
IF THIS BAR DOES NOT MEASURE 1" THEN DRAWING IS NOT TO FULL SCALE	0 1/2" 1"

SHAJAN JOYKUTTY LICENSE No 43323 STATE OF FLORIDA PROFESSIONAL ENGINEER
10/2/19

SHAJAN JOYKUTTY, P.E.
No. 43323

Hazen

HAZEN AND SAWYER
4000 HOLLYWOOD BOULEVARD, SUITE 750N
HOLLYWOOD, FLORIDA 33021
CERTIFICATE OF AUTHORIZATION NO. : 2771

CITY OF HALLANDALE BEACH

WATER TREATMENT PLANT
TRANSFER PUMP REPLACEMENT

Hallandale Beach
PROSPERITY, INNOVATION, OPPORTUNITY

STRUCTURAL DETAILS
SHEET 1

DATE:	OCTOBER 2019
HAZEN NO.:	40621-001
CONTRACT NO.:	1
DRAWING NUMBER:	S-04

BID SET

File: C:\BMS\HAZEN-PW\DMS27883\S-04 Saved By: USUARIO Save Date: 2019/02/13 3:25 PM
PLOT DATE: 2019/10/24 3:47:57 PM BY: TBOCAS

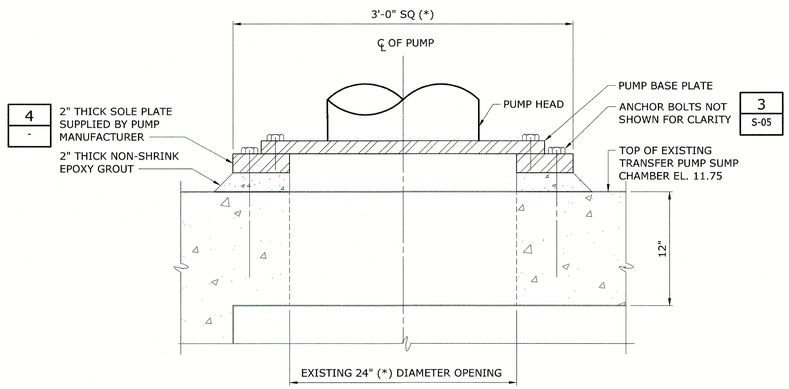

NOTE:

(*) CONTRACTOR SHALL FIELD VERIFY DIMENSIONS.

SECTION B - 1 1/2" = 1'-0"

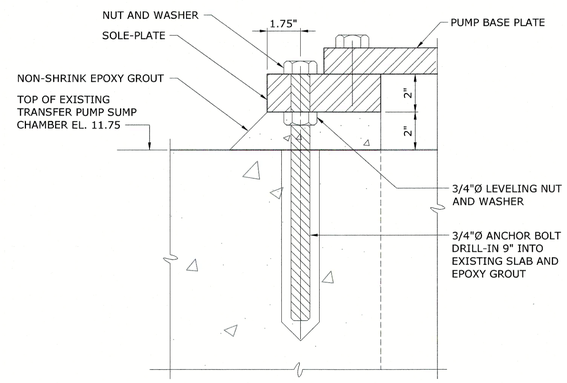

DETAIL 3 - 3" = 1'-0"

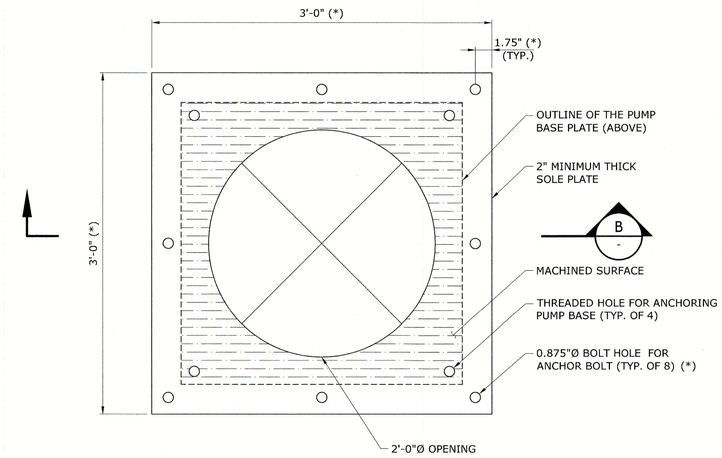

DETAIL 4 S-02 1 1/2" = 1'-0"

SOLE PLATE NOTES:

1. SOLE PLATE SHALL BE SUPPLIED BY THE PUMP MANUFACTURER.
2. ANCHOR BOLTS SHALL CONFORM TO ASTM A-193 GRADE B.
3. THE CONTACT AREA OF THE TOP OF THE SOLE PLATE SHALL BE MACHINED SMOOTH PER THE REQUIREMENTS OF THE PUMP MANUFACTURER.
4. SOLE PLATE SHALL BE LEVELED TO WITHIN 0.062-INCHES TOLERANCE IN THE PRESENCE OF THE PUMP MANUFACTURER´S TECHNICAL REPRESENTATIVE.
5. DIMENSION MARKED WITH AN ASTERISK (*) MAY VARY BASED ON PUMP SUPPLIED. THE MAXIMUM DIMENSION SHALL BE COORDINATED BY THE CONTRACTOR TO ENSURE NO CONFLICT WITH THE EXISTING STRUCTURE.

3"=1'-0" 2" 0 2 4 6"

1 1/2"=1'-0" 4" 0 1'

REV	ISSUED FOR	DATE	BY
1	100% SET FOR PERMITTING	2/15/19	GAB

PROJECT ENGINEER: L.Z.M.
DESIGNED BY: F.A.M.
DRAWN BY: G.B.
CHECKED BY:
IF THIS BAR DOES NOT MEASURE 1" THEN DRAWING IS NOT TO FULL SCALE 0 1/2" 1"

SHAJAN JOYKUTTY, P.E.
No. 43323

SHAJAN JOYKUTTY LICENSE No 43323 STATE OF FLORIDA PROFESSIONAL ENGINEER

10/28/19

Hazen

HAZEN AND SAWYER
4000 HOLLYWOOD BOULEVARD, SUITE 750N
HOLLYWOOD, FLORIDA 33021
CERTIFICATE OF AUTHORIZATION NO. : 2771

CITY OF HALLANDALE BEACH

WATER TREATMENT PLANT
TRANSFER PUMP REPLACEMENT

Hallandale Beach

STRUCTURAL DETAILS
SHEET 2

DATE: OCTOBER 2019
HAZEN NO.: 40621-001
CONTRACT NO.: 1
DRAWING NUMBER: S-05

BID SET

File: C:\BMS\HAZEN-PW\DMS57883\S-05 Saved By USUARIO Save Date: 2019/02/19 2:41 PM
PLOT DATE: 2019/10/24 3:48:02 PM BY: TBOCAS

LIGHTING:

X DENOTES FIXTURE TYPE (TYP.)
SEE SPECIFICATION 16500 FOR FIXTURE SCHEDULE
# DENOTES CIRCUIT NUMBER (TYP.)

RECTANGULAR FIXTURE

LEFT: CEILING MOUNTED FIXTURE
RIGHT: WALL MOUNTED FIXTURE

EMERGENCY WALL-MOUNTED FIXTURE:
LEFT: STANDARD
RIGHT: REMOTE-HEAD

LEFT: CEILING MOUNTED EXIT SIGN
RIGHT: WALL MOUNTED EXIT SIGN
SHADED PORTION DENOTES SIGN FACE

POLE-MOUNTED FIXTURE

PHOTOCELL

LEFT: CEILING MOUNTED OCCUPANCY SENSOR
RIGHT: WALL MOUNTED OCCUPANCY SENSOR
X DENOTES TYPE

RECEPTACLES:

X DENOTES RECEPTACLE TYPE (TYP.):
GFCI DENOTES GROUND FAULT CIRCUIT INTERRUPT
UPS DENOTES UNINTERRUPTIBLE POWER SUPPLY
WPCR DENOTES WEATHERPROOF CORROSION RESISTANT
# DENOTES CIRCUIT NUMBER (TYP.)

RECEPTACLES:
LEFT: SIMPLEX
MIDDLE: DUPLEX
RIGHT: QUADRUPLEX

MULTI-OUTLET RECEPTACLE:
LEFT: SIMPLEX
RIGHT: DUPLEX

OTHER RECEPTACLES:
LEFT: 240 VOLT
RIGHT: SPECIAL PURPOSE

SWITCHES

WALL SWITCH:
X DENOTES TYPE:
NO SUBSCRIPT DENOTES SINGLE-POLE SWITCH
3 DENOTES 3-WAY SWITCH
4 DENOTES 4-WAY SWITCH
M DENOTES MANUAL MOTOR STARTER
# DENOTES CIRCUIT NUMBER
WPCR DENOTES WEATHERPROOF CORROSION RESISTANT

COMBINATION MOTOR STARTER

DISCONNECT SWITCH

LOCAL CONTROL STATION

MISC PLAN VIEW SYMBOLS

EQUIPMENT CONNECTION

GROUND RODS:
LEFT: BURIED
RIGHT: IN TESTWELL

RACEWAY TAG:
X DENOTES RACEWAY ID

INSTRUMENT TAG:
X DENOTES INSTRUMENT TYPE
# DENOTES INSTRUMENT NUMBER
SEE DRAWING I1 FOR INSTRUMENT ABBREVIATIONS

CONDUIT TAGS:
P DENOTES POWER
C DENOTES CONTROL
I DENOTES INSTRUMENTATION
XXXX DENOTES CONDUIT ID
XXX-XXX DENOTES CONDUIT ID

WIRING

CONDUIT HOME RUN

CONDUIT EXPOSED

RACEWAY

CONDUIT CONCEALED

FLEXIBLE CONDUIT

LEFT: CONDUIT RISE (TURN UP)
RIGHT: CONDUIT DROP (TURN DOWN)

ELEMENTARY CONTROL SCHEMATICS

3-POSITION SELECTOR SWITCH:
HOA DENOTES HAND/OFF/AUTO
LOR DENOTES LOCAL/OFF/REMOTE
FOR DENOTES FORWARD/OFF/REVERSE

PUSHBUTTON SWITCHES:
LEFT: N.O.
RIGHT: N.C.
TEXT DENOTES LEGEND PLATE

EMERGENCY STOP MUSHROOM HEAD PUSHBUTTON SWITCH (N.C.):
TEXT DENOTES LEGEND PLATE

PUSHBUTTON SWITCH N.C. WITH LOCK-OUT:
TEXT DENOTES LEGEND PLATE

SELECTOR SWITCH:
LEFT: STANDARD
RIGHT: SPRING-RETURN
TEXT DENOTES LEGEND PLATE

SOLID-STATE OVERLOAD RELAY

THERMAL OVERLOAD RELAY

	NO	NC
DISCONNECT SWITCHES		
CONTACTS	X	X
TORQUE SWITCH	–	NS
LIMIT SWITCHES	LS	LS

NOTATION LEGEND:
NO/NC: NORMALLY OPEN/CLOSED
RO/RC: RISE-TO-OPEN/CLOSE
FO/FC: FALL-TO-OPEN/CLOSE
TO/TC: TIME-OPEN/CLOSE

CONTACTS:
TEXT DENOTES COIL ID

SWITCHES:
TEXT DENOTES TAG NUMBER

	NORC	NOFC	NCRO	NCFO
TEMPERATURE SWITCHES/ THERMOSTATS	TS	–	TS	–
PRESSURE SWITCHES	PS	PS	PS	PS
LEVEL SWITCHES	LS	LS	LS	LS
FLOW SWITCHES	FS	FS	FS	FS

	NOTC	NOTO	NCTO	NCTC
TIME DELAY SWITCHES	TD	TD	TD	TD

INDICATOR LIGHT:
LEFT: STANDARD/RIGHT: PUSH-TO-TEST
X DENOTES COLOR

RUN TIME METER

SOLENOID VALVE

MOTOR PROTECTION RELAY

CPT 480/120VAC — CONTROL POWER TRANSFORMER

MECHANICAL INTERLOCK CONNECTION

MOTOR SPACE HEATER

COIL:
X DENOTES TYPE:
M DENOTES MOTOR STARTER
CR DENOTES CONTROL RELAY
TD DENOTES TIME DELAY RELAY
TR DENOTES TIMER RANGE
TS DENOTES TIMER SETPOINT
PR DENOTES INTERPOSING PILOT RELAY
LC DENOTES LIGHTING CONTACTOR
Y DENOTES REFERENCE LINE NUMBER

EQUIPMENT/DEVICE LOCATION SYMBOLS

LOCATED IN MCC

LOCATED IN STAND-ALONE MOTOR STARTER/CONTROLLER

LOCATED IN FIELD

LOCATED AT PANEL:
X DENOTES PANEL ID:
L DENOTES LOCAL CONTROL STATION

SINGLE-LINE DIAGRAMS

XFMR
kVA
480-120/208V
3P/4W
DRY TRANS
TRANSFORMER

PROTECTIVE RELAY:
NUMBER DENOTES IEEE DEVICE FUNCTION

MOTOR AND TYPICAL ADDITIONAL DEVICES:
TSH: TEMPERATURE SWITCH
MSH: MOTOR SPACE HEATER
CF: COOLING FAN
TE: TEMPERATURE ELEMENT
ME: MOISTURE DETECTOR

LINE CONTINUATION INDICATOR
X DENOTES CONNECTION

INSTRUMENT TAG:
X DENOTES INSTRUMENT TYPE
Y DENOTES INSTRUMENT NUMBER
SEE DRAWING I1 FOR INSTRUMENT ABBREVIATIONS

100A FUSE

100A 3P / 100A FUSED DISCONNECT SWITCH

30A 3P DISCONNECT SWITCH

30A 3P FUSED DISCONNECT SWITCH

800AF 800AP 800AT LSIGZ CTR

LOW-VOLTAGE POWER CIRCUIT BREAKER:
LEFT: FIXED-MOUNT
RIGHT: DRAWOUT
E.O. DENOTES ELECTRICALLY OPERATED
LSIG DENOTES INSTALLED TRIP FUNCTIONS:
L DENOTES LONG-TIME
S DENOTES SHORT-TIME
I DENOTES INSTANTANEOUS
G DENOTES GROUND FAULT
Z DENOTES ZONE-SELECTIVE INTERLOCKING
CTR DENOTES BREAKER-SPECIFIC CT AND RATIOS

100AF/100AT; ETU 800AF 800AP 800AT LSIG

LOW-VOLTAGE MOLDED CASE CIRCUIT BREAKER
LEFT: THERMAL-MAGNETIC TRIP UNIT
RIGHT: ELECTRONIC TRIP UNIT

30A MCP — MOTOR CIRCUIT PROTECTOR

GROUND

600:5 (3)
CT:
NUMBERS DENOTE CT WINDING RATIO AND CT QUANTITY

50:5 (1)
GFCT:
NUMBERS DENOTE GFCT WINDING RATIO AND GFCT QUANTITY

480:120 (3)
PT:
NUMBERS DENOTE PT WINDING VOLTAGES AND PT QUANTITY

DRAW-OUT ELEMENT

LEFT: PANELBOARD
RIGHT: COMBINATION POWER UNIT
X DENOTES PANEL ID

LIGHTNING ARRESTOR

SINGLE-LINE DIAGRAMS, CONT'D.

500kW 480V,3Ø,4W — GENERATOR

LEFT: RESISTOR
RIGHT: LINE REACTOR:
#% DENOTES IMPEDANCE

CAPACITOR

SHUNT TRIP

SPD XXXkA — SURGE PROTECTIVE DEVICE

KIRK-KEY INTERLOCK

LEFT: FVNR STARTER:
X DENOTES NEMA SIZE
DP DENOTES DEFINITE PURPOSE CONTACTOR
RIGHT: FVR STARTER

LEFT: VFD WITH LINE REACTOR
MIDDLE: VFD WITH HARMONIC FILTER
RIGHT: VFD WITH LINE REACTOR AND FVNR BYPASS
X DENOTES NEMA SIZE

VFD WITH RVSS BYPASS

RVAT STARTER:
X DENOTES NEMA SIZE
#% DENOTES TAP SETTING

ABBREVIATIONS

AE	ANALYSIS ELEMENT
AIC	AMPERE INTERRUPTING CAPACITY
AIT	ANALYSIS INDICATING TRANSMITTER
ANSI	AMERICAN NATIONAL STANDARDS INSTITUTE
ASCE	AMERICAN SOCIETY OF CIVIL ENGINEERS
ASME	AMERICAN SOCIETY OF MECHANICAL ENGINEERS
AF	AMPERE FRAME
AT	AMPERE TRIP
ATS	AUTOMATIC TRANSFER SWITCH
BC	BYPASS CONTACTOR
BKR	BREAKER
(L/V))CP	(LOCAL/VENDOR) CONTROL PANEL

ABBREVIATIONS, CONT.

CPB	CONTROL PULL BOX
CPT	CONTROL POWER TRANSFORMER
CT	CURRENT TRANSFORMER
DB	DUCTBANK
DSW	DISCONNECT SWITCH
EHH	ELECTRIC HAND HOLE
EMH	ELECTRIC MANHOLE
EO	ELECTRICALLY OPERATED
ETM	ELAPSED TIME METER
ETU	ELECTRONIC TRIP UNIT
FS	FLOW SWITCH
FSL	FLOW SWITCH LOW
FVNR	FULL VOLTAGE NON-REVERSING
FVR	FULL VOLTAGE REVERSING
GFCI	GROUND FAULT CIRCUIT INTERRUPTER
GFCT	GROUND FAULT CURRENT TRANSFORMER
GND	GROUND
HOA	HAND-OFF-AUTO
HPU	HYDRAULIC POWER UNIT
IC	INPUT CONTACTOR
IEEE	INSTITUTE OF ELECTRICAL AND ELECTRONICS ENGINEERS
IPB	INSTRUMENTATION PULL BOX
ISO	INTERNATIONAL ORGANIZATION FOR STANDARDIZATION
JB	JUNCTION BOX
LCS	LOCAL CONTROL STATION
LP	LIGHTING PANEL
LS	LEVEL SWITCH
LSL	LEVEL SWITCH LOW
LSLL	LEVEL SWITCH LOW-LOW
LSH	LEVEL SWITCH HIGH
LSHH	LEVEL SWITCH HIGH-HIGH
LT	LEVEL TRANSMITTER
MFR	MULTI-FUNCTION RELAY
MH	MANHOLE
MOD	MOTOR OPERATED DAMPER
MOG	MOTOR OPERATED GATE
MOL	MOTOR OPERATED LOUVER
MOV	MOTOR OPERATED VALVE
MPR	MOTOR PROTECTION RELAY
MTD	MOUNTED
MTS	MANUAL TRANSFER SWITCH
MWTS	MOTOR WINDING TEMPERATURE SWITCH
NC	NORMALLY CLOSED
NEC	NATIONAL ELECTRICAL CODE
NEMA	NATIONAL ELECTRICAL MANUFACTURERS ASSN
NFPA	NATIONAL FIRE PROTECTION ASSOCIATION
NO	NORMALLY OPEN
NTS	NOT TO SCALE
OC	OUTPUT CONTACTOR
OL	OVERLOAD
PB	PULLBOX
PCC	POINT OF COMMON COUPLING
PE	PRESSURE ELEMENT
PIT	PRESSURE INDICATING TRANSMITTER
PLC	PROGRAMMABLE LOGIC CONTROLLER
PP	POWER PANEL
PST	PHASE SHIFTING TRANSFORMER
PT	POTENTIAL TRANSFORMER
PTT	PUSH TO TEST
RCS	REMOTE CONTROL STATION
RECP	RECEPTACLE
RIO	REMOTE I/O
RM	ROOM
RTD	RESISTANCE THERMAL DEVICE
RTU	REMOTE TELEMETRY UNIT
RVAT	REDUCED VOLTAGE AUTO TRANSFORMER
RVSS	REDUCED VOLTAGE SOLID STATE
S.E.	SERVICE ENTRANCE
SP.	C. SPARE CONDUIT
SPD	SURGE PROTECTIVE DEVICE

NOTES:

1. UNLESS SPECIFICALLY NOTED OTHERWISE, ALL UNDERGROUND CONCRETE ENCASED ELECTRICAL CONDUITS SHALL BE PER STANDARD DETAIL 1611801.
2. THE INSTALLATION OF ALL CONCRETE ENCASED ELECTRICAL CONDUITS SHALL COMPLY WITH ACI 318, SECTION 6.3. CONTRACTOR SHALL SUPPLY EXPANSION JOINT FITTINGS AS REQUIRED FOR THERMAL EXPANSION AND DEFLECTION.
3. BOND ALL NEW CONCRETE ENCASED GROUND CONDUCTORS TO EXISTING GROUND CONDUCTORS IN ALL MANHOLES, PULL BOXES, CABLE TRAYS, AND SIMILAR LOCATIONS WHERE APPLICABLE.
4. UNLESS OTHERWISE SPECIFIED OR NOTED, ALL WALL MOUNTED ELECTRICAL PANELS, ENCLOSURES, AND SIMILAR EQUIPMENT SHALL BE MOUNTED 6'-6" (MAX) FROM THE TOP OF THE PANEL TO FINISHED FLOOR OR GRADE.
5. UNLESS OTHERWISE NOTED, ALL LIGHTING SWITCHES, CONTROL SWITCHES, AND SIMILAR EQUIPMENT SHALL BE MOUNTED WITH THEIR CENTERLINE APPROXIMATELY 4'-0" ABOVE FINISHED FLOOR, SLAB, OR GRADE.
6. A SEPARATE EQUIPMENT GROUNDING CONDUCTOR SHALL BE PROVIDED FOR EACH CIRCUIT (SEPARATE CONDUCTOR IN THE CONDUIT). THE CONDUCTOR SHALL BE TERMINATED AT THE PROPER DEVICE, TERMINAL, OR LUG AT THE POWER SOURCE (MCC GROUND BUS, PANELBOARD GROUND BUS, ETC.). GROUND CONDUCTOR SIZE SHALL BE PER THE LATEST EDITION OF THE NEC.
7. UNLESS SPECIFICALLY NOTED OTHERWISE, EXISTING PAVEMENT SHALL BE SAW CUT AND REMOVED TO ALLOW FOR THE INSTALLATION OF NEW ELECTRICAL DUCTBANKS. AFTER INSTALLATION, REPLACE PAVEMENT WITH NEW TO MATCH ORIGINAL CONDITIONS.
8. ALL PROCESS INSTRUMENTS SHALL BE PROVIDED WITH A LOCAL DISCONNECT SWITCH AS SPECIFIED IN SPECIFICATION SECTION 16141.
9. REFERENCE SECTION 01520 FOR CONSTRUCTION SEQUENCING REQUIREMENTS.
10. CONDUIT HOMERUNS ARE NOT SHOWN ON DRAWINGS. CONTRACTOR SHALL REFER TO CONDUIT AND WIRE SCHEDULE, RISER DIAGRAMS, SINGLE LINE DIAGRAMS, AND OTHER DRAWINGS FOR CONDUIT AND WIRE REQUIREMENTS.

ABBREVIATIONS, CONT.

SST	STAINLESS STEEL
TB	TEST BLOCK
TC	TIMED CLOSE
TO	TIMED OPEN
TSH	TWISTED SHIELDED
TX	TRANSFORMER
TYP	TYPICAL
UPS	UNINTERRUPTIBLE POWER SUPPLY
VFD	VARIABLE FREQUENCY DRIVE
WPCR	WEATHER PROOF CORROSION RESISTANT
XFMR	TRANSFORMER

REV	ISSUED FOR	DATE	BY
1	BID SET	10/19	GAB

PROJECT ENGINEER: L.Z.M.
DESIGNED BY: P. BOWLES
DRAWN BY: T. RAHLAN
CHECKED BY: B. PICKETT
IF THIS BAR DOES NOT MEASURE 1" THEN DRAWING IS NOT TO FULL SCALE 0 1/2" 1"

JOSEPH B. PICKETT LICENSE No. 74106 STATE OF FLORIDA PROFESSIONAL ENGINEER 10/23/19
J. BRAD PICKETT, PE NO. 74106

Hazen
HAZEN AND SAWYER
4000 HOLLYWOOD BOULEVARD, SUITE 750N
HOLLYWOOD, FLORIDA 33021
CERTIFICATE OF AUTHORIZATION NO. : 2771

CITY OF HALLANDALE BEACH

WATER TREATMENT PLANT
TRANSFER PUMP REPLACEMENT

Hallandale Beach
PROGRESS. INNOVATION. OPPORTUNITY

LEGEND, SYMBOLS, ABBREVIATIONS, AND GENERAL NOTES

DATE: OCTOBER 2019
HAZEN NO.: 40621-001
CONTRACT NO.: 1
DRAWING NUMBER: E-01

BID SET

File: C:\BMS\HAZEN-PW\DMS57876\E-01 Saved By TRAHLAN Save Date: 2019/10/18 2:51 PM
PLOT DATE: 2019/10/23 10:57:03 AM BY: TRAHLAN

NOTES:

1. SEE DRAWING E-11 FOR ADDITIONAL DETAILS AND LOADS ON MCC-1.

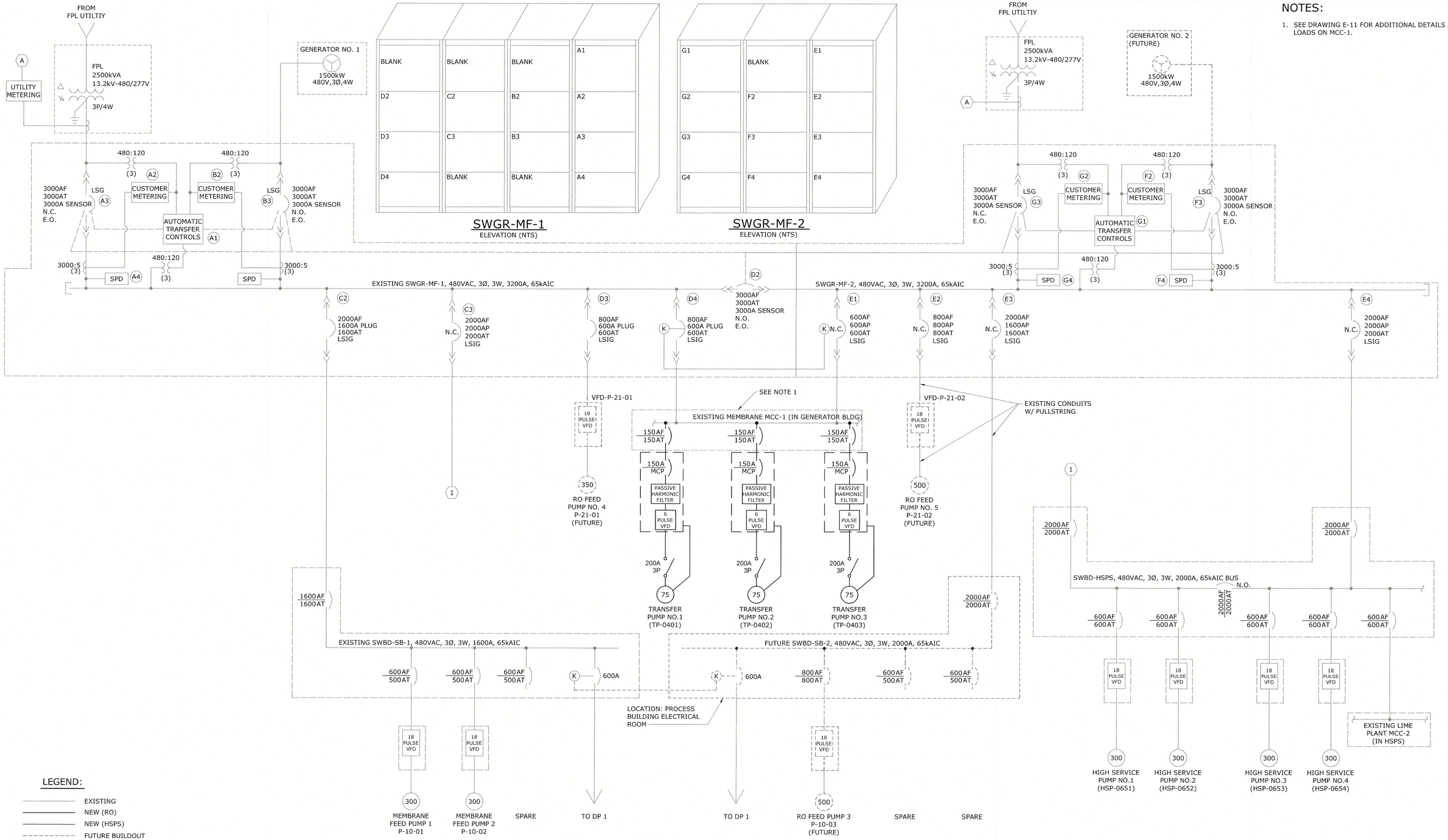

LEGEND:

- EXISTING
- NEW (RO)
- NEW (HSPS)
- FUTURE BUILDOUT
- (X) LINE CONTINUATION

ELECTRICAL POWER DISTRIBUTION - MODIFIED

SINGLE LINE DIAGRAM

REV	ISSUED FOR	DATE	BY
1	BID SET	10/19	GAB

PROJECT ENGINEER:	L.Z.M.
DESIGNED BY:	P. BOWLES
DRAWN BY:	T. RAHLAN
CHECKED BY:	B. PICKETT
IF THIS BAR DOES NOT MEASURE 1" THEN DRAWING IS NOT TO FULL SCALE	0 1/2" 1"

JOSEPH B. PICKETT LICENSE No. 74106 STATE OF FLORIDA PROFESSIONAL ENGINEER 10/23/19

J. BRAD PICKETT, PE NO. 74106

Hazen

HAZEN AND SAWYER
4000 HOLLYWOOD BOULEVARD, SUITE 750N
HOLLYWOOD, FLORIDA 33021
CERTIFICATE OF AUTHORIZATION NO. : 2771

CITY OF HALLANDALE BEACH

WATER TREATMENT PLANT TRANSFER PUMP REPLACEMENT

Hallandale Beach

OVERALL PLANT SINGLE LINE DIAGRAM

DATE:	OCTOBER 2019
HAZEN NO.:	40621-001
CONTRACT NO.:	1
DRAWING NUMBER:	E-02

BID SET

File: C:\BMS\HAZEN-PW\DMS57876\E-02 Saved By PBOWLES Save Date: 2018/12/19 2:53 PM
PLOT DATE: 2019/10/23 10:57:06 AM BY: TRAHLAN

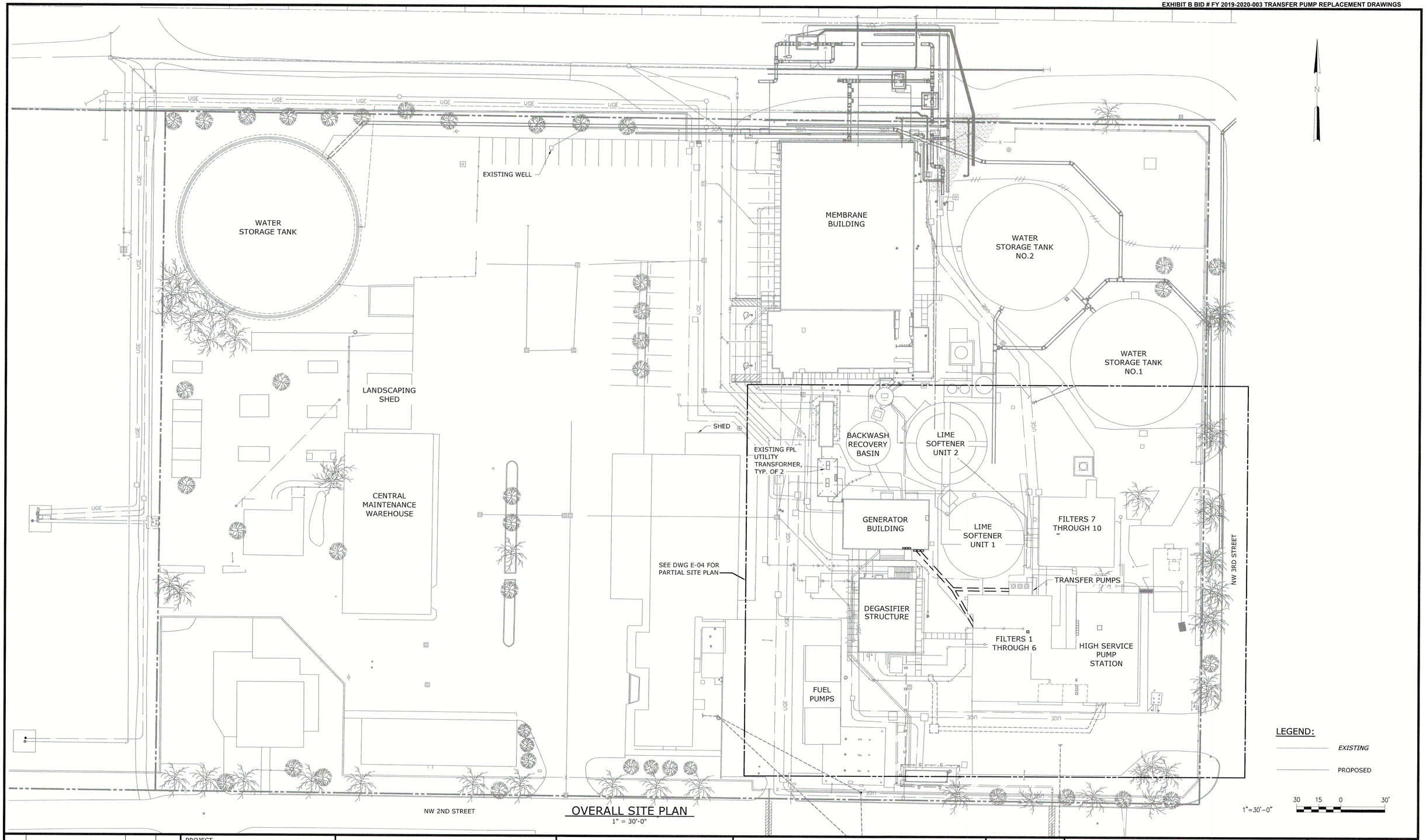

OVERALL SITE PLAN
1" = 30'-0"

REV	ISSUED FOR	DATE	BY
1	BID SET	10/19	GAB

PROJECT ENGINEER:	L.Z.M.
DESIGNED BY:	P. BOWLES
DRAWN BY:	T. RAHLAN
CHECKED BY:	B. PICKETT
IF THIS BAR DOES NOT MEASURE 1" THEN DRAWING IS NOT TO FULL SCALE	0 1/2" 1"

JOSEPH B. PICKETT LICENSE No. 74106 STATE OF FLORIDA PROFESSIONAL ENGINEER 10/23/19

J. BRAD PICKETT, PE NO. 74106

Hazen

HAZEN AND SAWYER
4000 HOLLYWOOD BOULEVARD, SUITE 750N
HOLLYWOOD, FLORIDA 33021
CERTIFICATE OF AUTHORIZATION NO. : 2771

CITY OF HALLANDALE BEACH

WATER TREATMENT PLANT
TRANSFER PUMP REPLACEMENT

Hallandale Beach
PROGRESS. INNOVATION. OPPORTUNITY

OVERALL ELECTRICAL SITE PLAN

DATE:	OCTOBER 2019
HAZEN NO.:	40621-001
CONTRACT NO.:	1
DRAWING NUMBER:	E-03

BID SET

File: C:\BMS\HAZEN-PW\DMS57875\E-03 Saved By: TRAHLAN Save Date: 2019/10/18 2:49 PM
PLOT DATE: 2019/10/23 10:37:11 AM BY: TRAHLAN

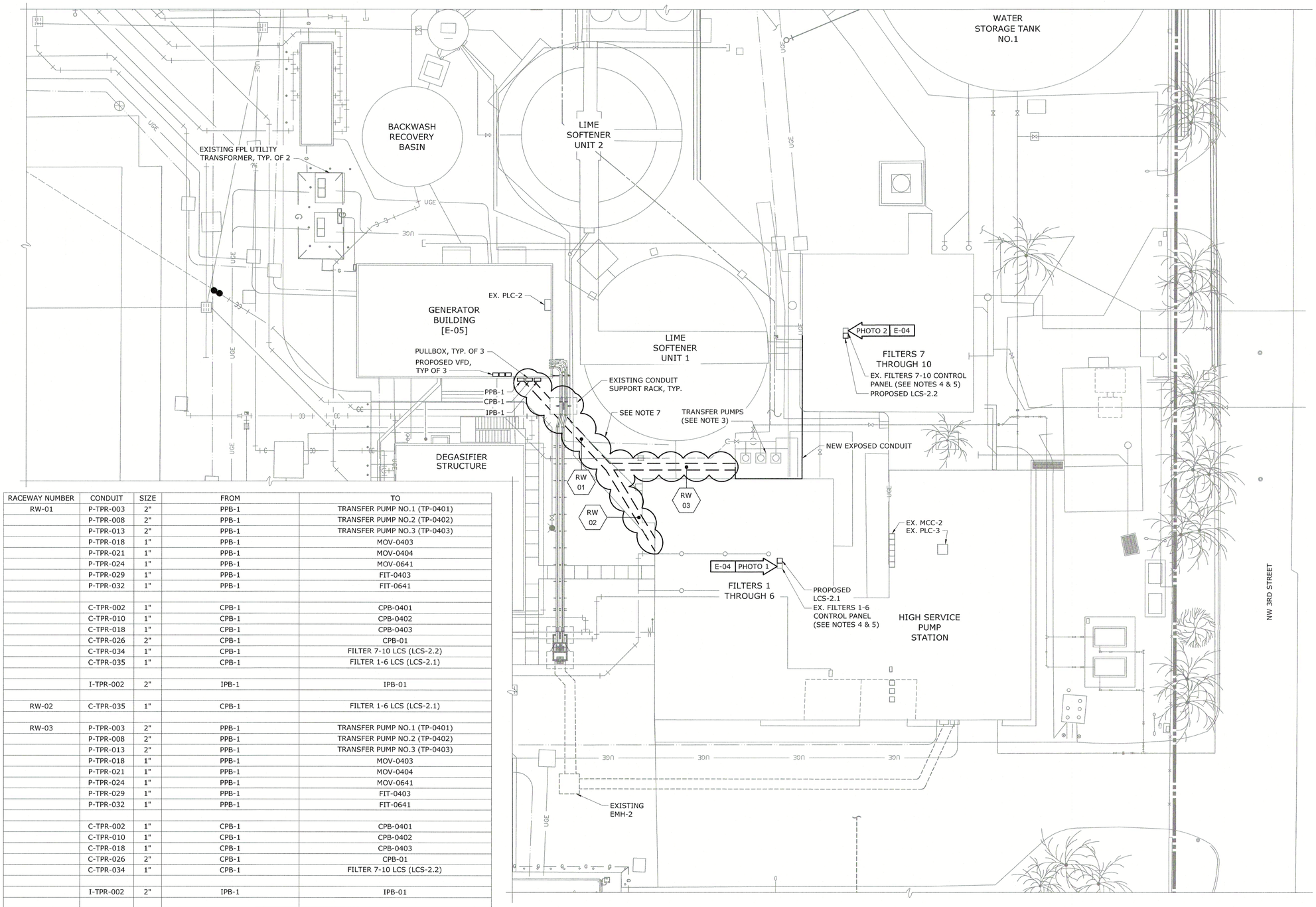

PARTIAL SITE PLAN
1' = 15'-0"

RACEWAY NUMBER	CONDUIT	SIZE	FROM	TO
RW-01	P-TPR-003	2"	PPB-1	TRANSFER PUMP NO.1 (TP-0401)
	P-TPR-008	2"	PPB-1	TRANSFER PUMP NO.2 (TP-0402)
	P-TPR-013	2"	PPB-1	TRANSFER PUMP NO.3 (TP-0403)
	P-TPR-018	1"	PPB-1	MOV-0403
	P-TPR-021	1"	PPB-1	MOV-0404
	P-TPR-024	1"	PPB-1	MOV-0641
	P-TPR-029	1"	PPB-1	FIT-0403
	P-TPR-032	1"	PPB-1	FIT-0641
	C-TPR-002	1"	CPB-1	CPB-0401
	C-TPR-010	1"	CPB-1	CPB-0402
	C-TPR-018	1"	CPB-1	CPB-0403
	C-TPR-026	2"	CPB-1	CPB-01
	C-TPR-034	1"	CPB-1	FILTER 7-10 LCS (LCS-2.2)
	C-TPR-035	1"	CPB-1	FILTER 1-6 LCS (LCS-2.1)
	I-TPR-002	2"	IPB-1	IPB-01
RW-02	C-TPR-035	1"	CPB-1	FILTER 1-6 LCS (LCS-2.1)
RW-03	P-TPR-003	2"	PPB-1	TRANSFER PUMP NO.1 (TP-0401)
	P-TPR-008	2"	PPB-1	TRANSFER PUMP NO.2 (TP-0402)
	P-TPR-013	2"	PPB-1	TRANSFER PUMP NO.3 (TP-0403)
	P-TPR-018	1"	PPB-1	MOV-0403
	P-TPR-021	1"	PPB-1	MOV-0404
	P-TPR-024	1"	PPB-1	MOV-0641
	P-TPR-029	1"	PPB-1	FIT-0403
	P-TPR-032	1"	PPB-1	FIT-0641
	C-TPR-002	1"	CPB-1	CPB-0401
	C-TPR-010	1"	CPB-1	CPB-0402
	C-TPR-018	1"	CPB-1	CPB-0403
	C-TPR-026	2"	CPB-1	CPB-01
	C-TPR-034	1"	CPB-1	FILTER 7-10 LCS (LCS-2.2)
	I-TPR-002	2"	IPB-1	IPB-01

RACEWAY SCHEDULE

NOTES:

1. UNDERGROUND UTILITIES SHOWN ARE TAKEN FROM EXISTING RECORDS AND ARE SHOWN FOR THE CONVENIENCE OF THE CONTRACTOR ONLY.
2. THE CONTRACTOR SHALL ACCURATELY LOCATE AND UNCOVER ALL EXISTING UTILITIES BEFORE BEGINNING CONSTRUCTION. ANY DAMAGE RESULTING FROM THE CONTRACTOR'S OPERATIONS SHALL BE REPAIRED AT THE CONTRACTOR'S EXPENSE.
3. SEE DRAWINGS E-07 THROUGH E-10 FOR FURTHER DETAILS.
4. CONTROL PANELS ARE LOCATED ON THE SECOND FLOOR OF THE BUILDINGS SHOWN. CONTRACTOR SHALL FIELD VERIFY EXACT LOCATION.
5. CONTRACTOR SHALL MODIFY EXISTING PANEL AS REQUIRED TO SUPPLY 120V TO NEW LOCAL CONTROL STATIONS.
6. REMOVE EXISTING LOCAL CONTROL STATION.
7. CONTRACTOR SHALL DESIGN, FURNISH AND INSTALL ENTIRE RACEWAY FROM GENERATOR BUILDING TO TRANSFER PUMPS AND FILTERS 1-6 CONTROL PANEL. DESIGN MAY INCORPORATE EXISTING CONDUIT SUPPORT RACK, IF NECESSARY. DESIGN SHALL BE SIGNED AND SEALED BY A REGISTERED PROFESSIONAL ENGINEER IN THE STATE OF FLORIDA AND SHALL BE SUBMITTED TO THE ENGINEER AND OWNER FOR APPROVAL PRIOR TO CONSTRUCTION. DESIGN MAY BE OVERHEAD OR UNDERGROUND AS NECESSARY AND SHALL MEET ALL APPLICABLE CODE AND REQUIREMENTS. UNDERGROUND DESIGN SHALL BE PER STANDARD DETAIL 1611081.

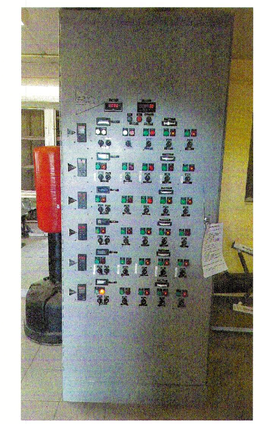

PHOTO 1
NTS

PHOTO 2
NTS

REV	ISSUED FOR	DATE	BY
1	BID SET	10/19	GAB

PROJECT ENGINEER: L.Z.M.
DESIGNED BY: P. BOWLES
DRAWN BY: T. RAHLAN
CHECKED BY: B. PICKETT
IF THIS BAR DOES NOT MEASURE 1" THEN DRAWING IS NOT TO FULL SCALE 0 1/2" 1"

JOSEPH B. PICKETT LICENSE No. 74106 STATE OF FLORIDA PROFESSIONAL ENGINEER 10/23/19
J. BRAD PICKETT, PE NO. 74106

Hazen
HAZEN AND SAWYER
4000 HOLLYWOOD BOULEVARD, SUITE 750N
HOLLYWOOD, FLORIDA 33021
CERTIFICATE OF AUTHORIZATION NO. : 2771

CITY OF HALLANDALE BEACH
WATER TREATMENT PLANT
TRANSFER PUMP REPLACEMENT

Hallandale Beach
PROGRESS. INNOVATION. OPPORTUNITY

PARTIAL SITE PLAN AND DUCTBANK SCHEDULE

DATE: OCTOBER 2019
HAZEN NO.: 40621-001
CONTRACT NO.: 1
DRAWING NUMBER: E-04

BID SET

File: C:\BMS\HAZEN-PW\DMS7875\E-04 Saved By: TRAHLAN Save Date: 2019/10/23 10:55 AM
PLOT DATE: 2019/10/23 10:57:16 AM BY: TRAHLAN

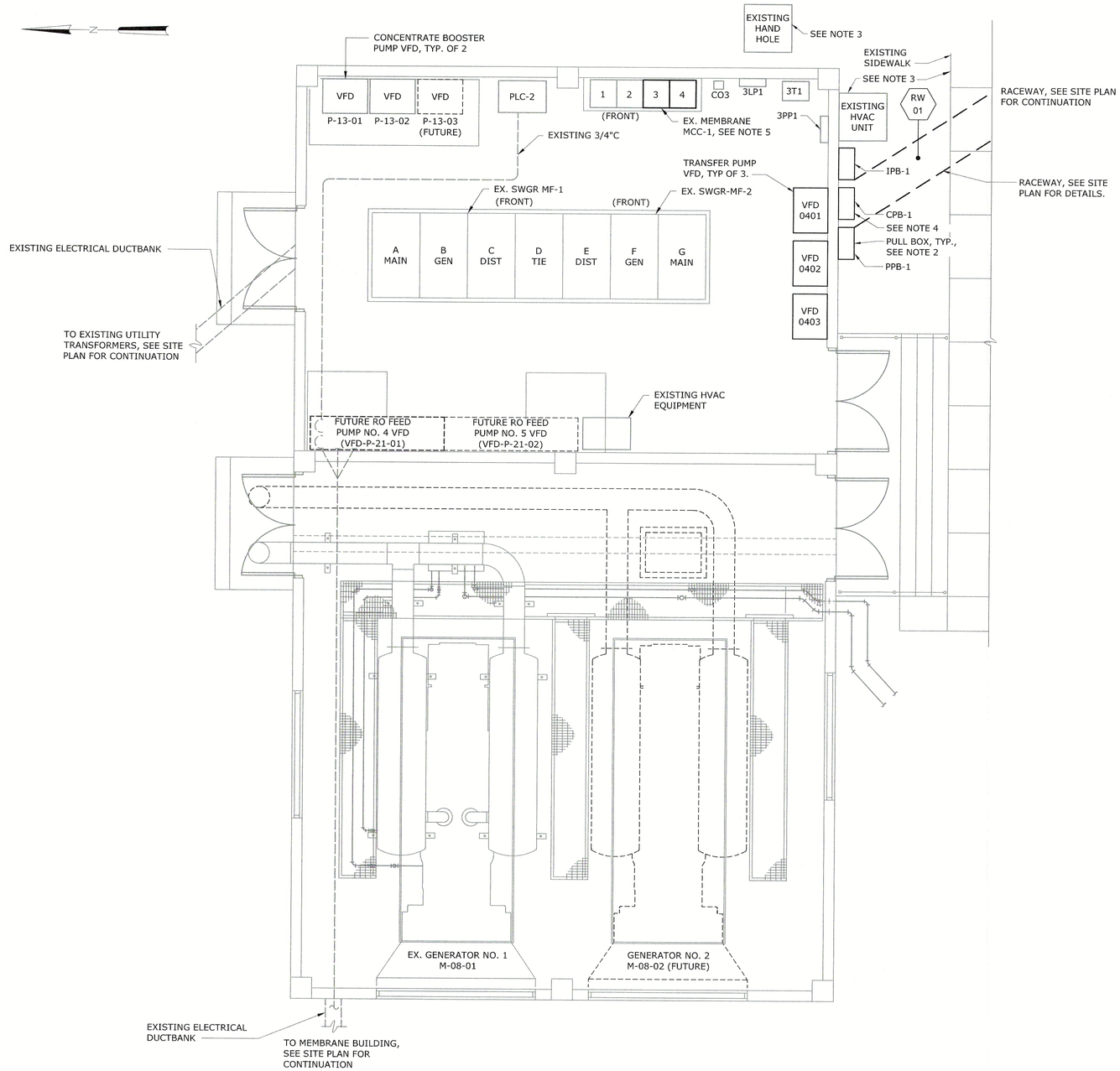

GENERATOR BUILDING - PLAN

1/4" = 1'-0"

NOTES:

1. GENERATOR BUILDING IS DESIGNATED AS A DRY NON-PROCESS AREA.
2. POWER, CONTROL, AND INSTRUMENTATION PULL BOXES ARE MOUNTED ON EXTERIOR WALL.
3. FIELD VERIFY LOCATION OF HVAC UNIT, HAND HOLE, AND SIDEWALK.
4. NEW CONDUITS FROM VFD'S AND PLC-2 TO PULL BOXES SHALL BE ROUTED OUT THE TOP OF THE VFD'S AND PLC-2 AND SHALL PENETRATE THE WALL INTO THE BACK OF THE PULL BOXES. SEE SITE PLAN FOR FURTHER DETAILS.
5. SEE DRAWING E-11 FOR FURTHER DETAILS ON MEMBRANE MCC-1.

LEGEND:

- EXISTING
- PROPOSED
- FUTURE
- RACEWAY

1/4"=1'-0" 1 0 1 2 3 7'

REV	ISSUED FOR	DATE	BY
1	BID SET	10/19	GAB

PROJECT ENGINEER:	L.Z.M.
DESIGNED BY:	P. BOWLES
DRAWN BY:	T. RAHLAN
CHECKED BY:	B. PICKETT
IF THIS BAR DOES NOT MEASURE 1" THEN DRAWING IS NOT TO FULL SCALE	0 1/2" 1"

JOSEPH B. PICKETT LICENSE No. 74106 STATE OF FLORIDA PROFESSIONAL ENGINEER 10/23/19

J. BRAD PICKETT, PE NO. 74106

Hazen

HAZEN AND SAWYER
4000 HOLLYWOOD BOULEVARD, SUITE 750N
HOLLYWOOD, FLORIDA 33021
CERTIFICATE OF AUTHORIZATION NO. : 2771

CITY OF HALLANDALE BEACH

WATER TREATMENT PLANT TRANSFER PUMP REPLACEMENT

Hallandale Beach PROSPERS. INNOVATION. OPPORTUNITY

GENERATOR BUILDING POWER PLAN

DATE:	OCTOBER 2019
HAZEN NO.:	40621-001
CONTRACT NO.:	1
DRAWING NUMBER:	E-05

BID SET

File: C:\BMS\HAZEN-FW\DMS7878\E-05 Saved By TRAHLAN Save Date: 2019/10/18 3:38 PM
PLOT DATE: 2019/10/23 10:57:20 AM BY: TRAHLAN

NOTES:

1. CONTRACTOR SHALL DEMOLISH EXISTING STARTERS.

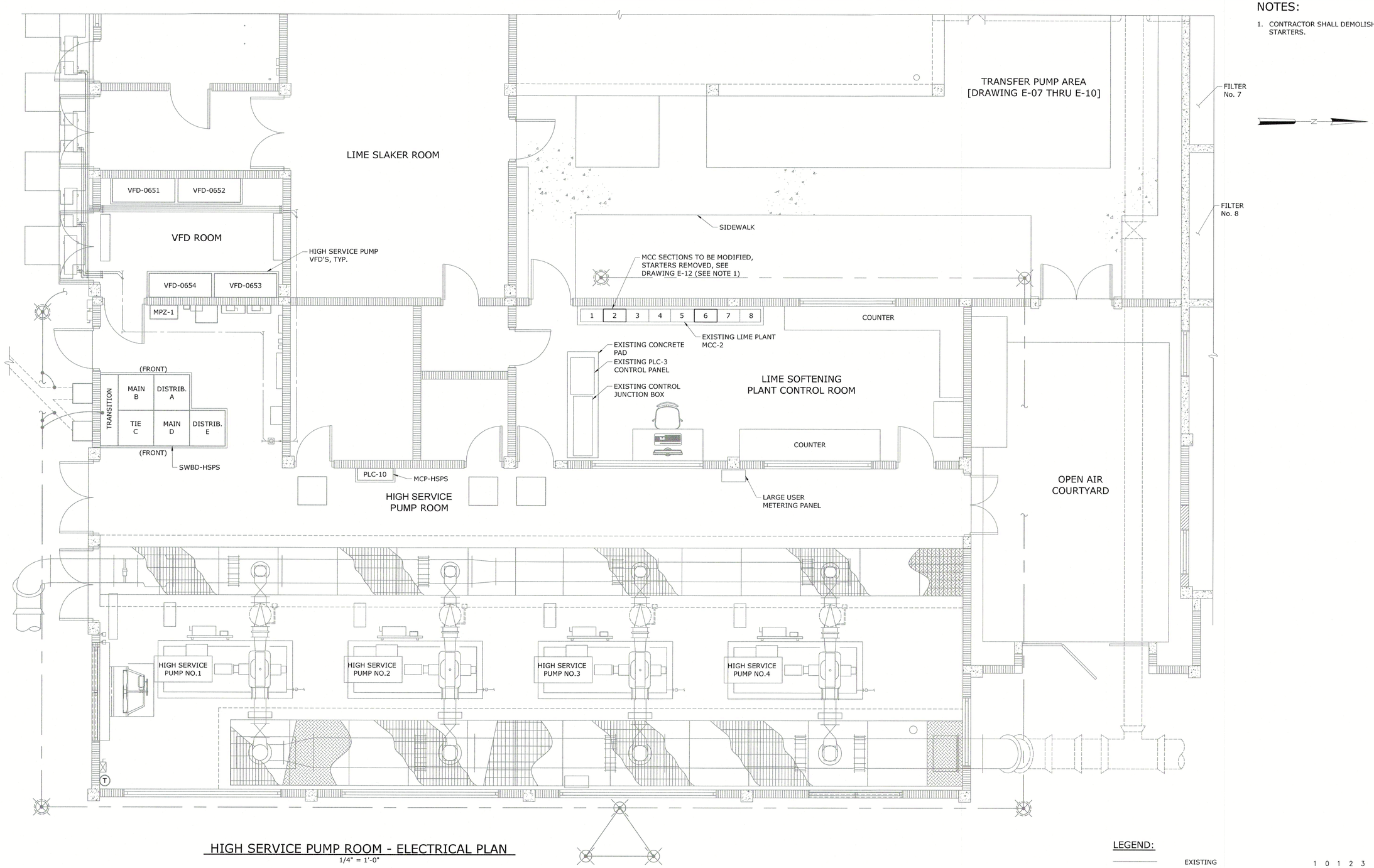

HIGH SERVICE PUMP ROOM - ELECTRICAL PLAN

1/4" = 1'-0"

LEGEND:

EXISTING

PROPOSED

1/4"=1'-0" 1 0 1 2 3 7'

REV	ISSUED FOR	DATE	BY
1	BID SET	10/19	GAB

PROJECT ENGINEER:	L.Z.M.
DESIGNED BY:	P. BOWLES
DRAWN BY:	T. RAHLAN
CHECKED BY:	B. PICKETT
IF THIS BAR DOES NOT MEASURE 1" THEN DRAWING IS NOT TO FULL SCALE	0 1/2" 1"

JOSEPH B. PICKETT LICENSE No. 74106 STATE OF FLORIDA PROFESSIONAL ENGINEER 10/23/19

J. BRAD PICKETT, PE NO. 74106

Hazen

HAZEN AND SAWYER
4000 HOLLYWOOD BOULEVARD, SUITE 750N
HOLLYWOOD, FLORIDA 33021
CERTIFICATE OF AUTHORIZATION NO. : 2771

CITY OF HALLANDALE BEACH

WATER TREATMENT PLANT
TRANSFER PUMP REPLACEMENT

Hallandale Beach
PROGRESS. INNOVATION. OPPORTUNITY

HIGH SERVICE PUMP STATION POWER PLAN

DATE:	OCTOBER 2019
HAZEN NO.:	40621-001
CONTRACT NO.:	1
DRAWING NUMBER:	E-06

BID SET

File: C:\BMS\HAZEN-PW\DMS57876\E-06 Saved By: TRAHLAN Save Date: 2019/10/18 2:53 PM
PLOT DATE: 2019/10/23 10:57:25 AM BY: TRAHLAN

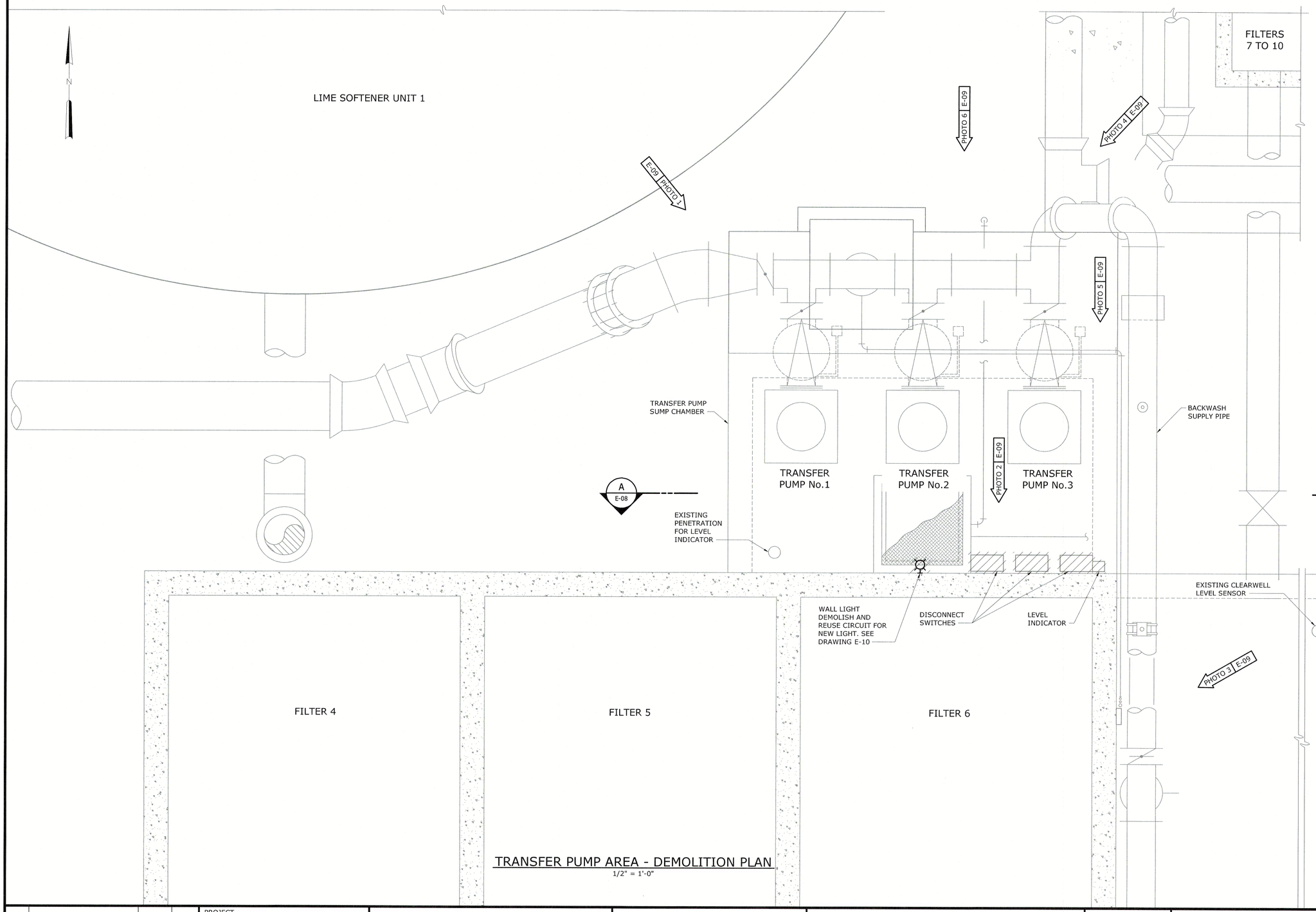

TRANSFER PUMP AREA - DEMOLITION PLAN

1/2" = 1'-0"

NOTES:

1. SEE ADDITIONAL ELECTRICAL DRAWINGS AND MECHANICAL DRAWINGS FOR FURTHER INFORMATION ON DEMOLITION.

LEGEND:

EXISTING

TO BE REMOVED

1/2"=1'-0"

12" 0 1 3'

REV	ISSUED FOR	DATE	BY
1	BID SET	10/19	GAB

PROJECT ENGINEER:	L.Z.M.
DESIGNED BY:	P. BOWLES
DRAWN BY:	T. RAHLAN
CHECKED BY:	B. PICKETT
IF THIS BAR DOES NOT MEASURE 1" THEN DRAWING IS NOT TO FULL SCALE	0 1/2" 1"

JOSEPH B. PICKETT LICENSE No. 74106 STATE OF FLORIDA PROFESSIONAL ENGINEER 10/23/19

J. BRAD PICKETT, PE NO. 74106

Hazen

HAZEN AND SAWYER
4000 HOLLYWOOD BOULEVARD, SUITE 750N
HOLLYWOOD, FLORIDA 33021
CERTIFICATE OF AUTHORIZATION NO. : 2771

CITY OF HALLANDALE BEACH

WATER TREATMENT PLANT
TRANSFER PUMP REPLACEMENT

Hallandale Beach
PROSPERITY, INNOVATION, OPPORTUNITY

TRANSFER PUMP AREA
DEMOLITION PLAN

DATE:	OCTOBER 2019
HAZEN NO.:	40621-001
CONTRACT NO.:	1
DRAWING NUMBER:	E-07

BID SET

File: C:\BMS\HAZEN-PW\BMS9876\E-07 Saved By: TRAHLAN Save Date: 2019/10/18 1:39 PM
Plot Date: 2019/10/23 10:57:30 AM BY: TRAHLAN

NOTES:

1. REMOVE EXPOSED CONDUIT AND WIRE COMPLETELY FROM SOURCE TO LOAD. CUT ABANDONED CONDUITS FLUSH WITH CONCRETE AND SEAL AS SHOWN IN STANDARD DETAIL 1611103.
2. SEE MECHANICAL DRAWINGS FOR FURTHER DETAILS.

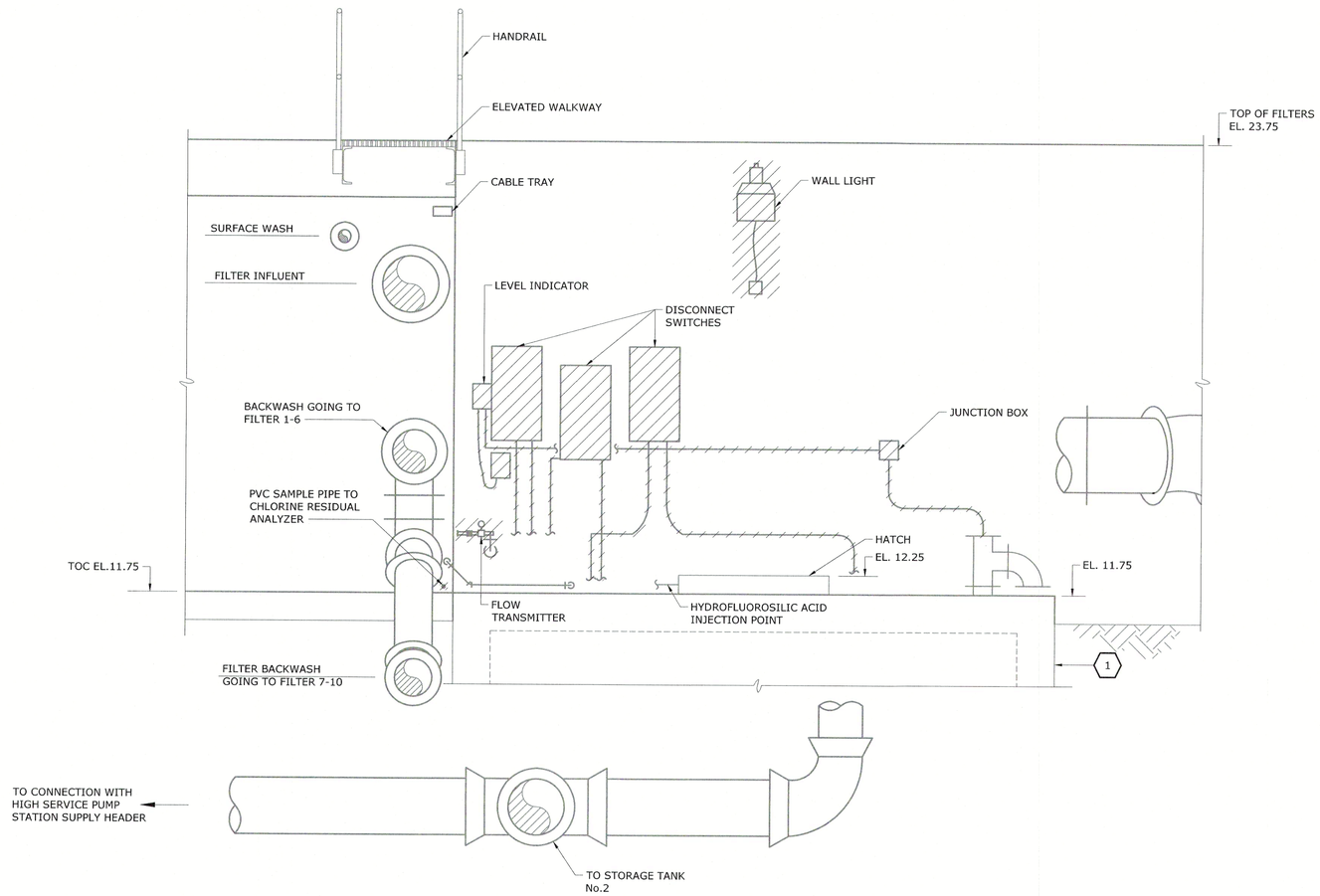

SECTION A / E-07
1/2" = 1'-0"

KEYED NOTES:

1. EXISTING PUMPS AND CERTAIN PIPING ASSOCIATED WITH THE PUMPS ARE NOT SHOWN FOR CLARITY

LEGEND:

EXISTING

TO BE REMOVED

1/2"=1'-0" 12" 0 1 3'

REV	ISSUED FOR	DATE	BY
1	BID SET	10/19	GAB

PROJECT ENGINEER:	L.Z.M.
DESIGNED BY:	P. BOWLES
DRAWN BY:	T. RAHLAN
CHECKED BY:	B. PICKETT

IF THIS BAR DOES NOT MEASURE 1" THEN DRAWING IS NOT TO FULL SCALE 0 1/2" 1"

JOSEPH B. PICKETT LICENSE No. 74106 STATE OF FLORIDA PROFESSIONAL ENGINEER 10/23/19

J. BRAD PICKETT, PE NO. 74106

Hazen

HAZEN AND SAWYER
4000 HOLLYWOOD BOULEVARD, SUITE 750N
HOLLYWOOD, FLORIDA 33021
CERTIFICATE OF AUTHORIZATION NO. : 2771

CITY OF HALLANDALE BEACH

WATER TREATMENT PLANT
TRANSFER PUMP REPLACEMENT

Hallandale Beach
PROGRESS. INNOVATION. OPPORTUNITY

TRANSFER PUMP AREA
DEMOLITION SECTION

DATE:	OCTOBER 2019
HAZEN NO.:	40621-001
CONTRACT NO.:	1
DRAWING NUMBER:	E-08

BID SET

File: C:\BMS\HAZEN-PW\DMS29876\E-08 Saved By: PBOWLES Save Date: 2019/02/19 5:11 PM
PLOT DATE: 2019/10/23 10:57:33 AM By: TRAHLAN

NOTES:

1. SEE MECHANICAL DRAWINGS FOR FURTHER DETAILS.

PHOTO 1
NTS

PHOTO 2
NTS

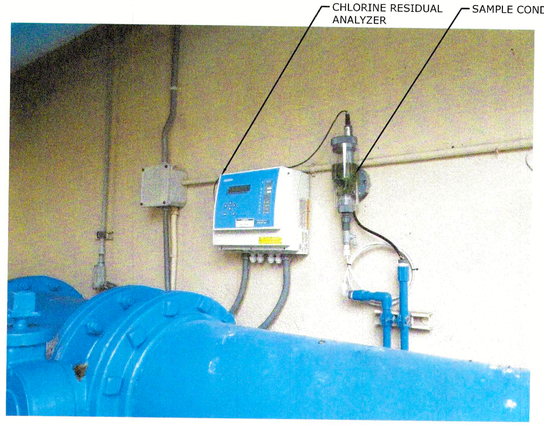

PHOTO 3
NTS

PHOTO 4
NTS

PHOTO 5
NTS

PHOTO 6
NTS

LEGEND:

TO BE REMOVED

REV	ISSUED FOR	DATE	BY
1	BID SET	10/19	GAB

IF THIS BAR DOES NOT MEASURE 1" THEN DRAWING IS NOT TO FULL SCALE (0 1/2" 1")

PROJECT ENGINEER:	L.Z.M.
DESIGNED BY:	P. BOWLES
DRAWN BY:	T. RAHLAN
CHECKED BY:	B. PICKETT

JOSEPH B. PICKETT LICENSE No. 74106 STATE OF FLORIDA PROFESSIONAL ENGINEER 10/23/19

J. BRAD PICKETT, PE NO. 74106

Hazen

HAZEN AND SAWYER
4000 HOLLYWOOD BOULEVARD, SUITE 750N
HOLLYWOOD, FLORIDA 33021
CERTIFICATE OF AUTHORIZATION NO. : 2771

CITY OF HALLANDALE BEACH

WATER TREATMENT PLANT
TRANSFER PUMP REPLACEMENT

Hallandale Beach
PROSPERITY, INNOVATION, OPPORTUNITY

TRANSFER PUMP AREA
DEMOLITION PHOTOS

DATE:	OCTOBER 2019
HAZEN NO.:	40621-001
CONTRACT NO.:	1
DRAWING NUMBER:	E-09

BID SET

File: C:\BMS\HAZEN-PW\MS25787\E-09 Saved By PBOWLES Save Date: 2018/12/19 2:46 PM
PLOT DATE: 2019/10/23 10:57:39 AM BY: TRAHLAN

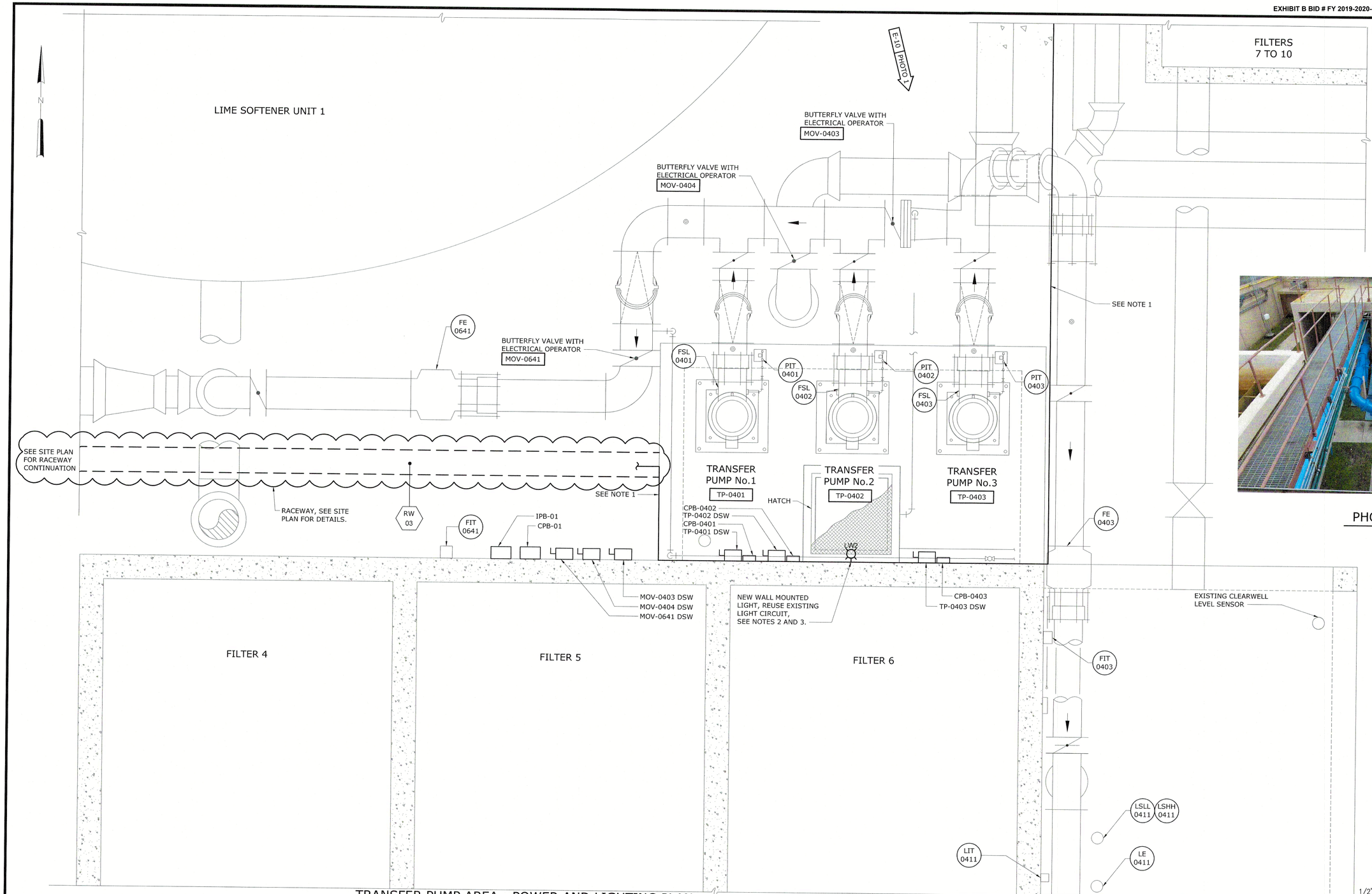

TRANSFER PUMP AREA - POWER AND LIGHTING PLAN

1/2" = 1'-0"

NOTES:

1. ROUTE CONDUIT EXPOSED, BEHIND TRANSFER PUMPS, TURN UP AND ROUTE ALONG ELEVATED WALKWAY TO FILTERS 7-10 CONTROL PANEL. SEE PHOTO FOR REFERENCE.
2. MOUNT FIXTURE TYPE LW2 8' ABOVE GRADE.
3. FIXTURE LW2 SHALL BE A HOLOPHANE W4G LED WALLPACK OR ENGINEER APPROVED EQUAL. FIXTURE SHALL HAVE THE FOLLOWING SPECIFICATIONS: 104W LED WALLPACK WITH A COLOR TEMPERATURE OF 4000K, PRISMATIC BOROSILICATE GLASS LENS, 30 LEDS, IESNA TYPE III MEDIUM DISTRIBUTION, BLACK DIE CAST HOUSING, AND A 8400 LUMEN MINIMUM.

PHOTO 1

NTS

REV	ISSUED FOR	DATE	BY
1	BID SET	10/19	GAB

PROJECT ENGINEER:	L.Z.M.
DESIGNED BY:	P. BOWLES
DRAWN BY:	T. RAHLAN
CHECKED BY:	B. PICKETT

IF THIS BAR DOES NOT MEASURE 1" THEN DRAWING IS NOT TO FULL SCALE 0 1/2" 1"

JOSEPH B. PICKETT LICENSE No. 74106 STATE OF FLORIDA PROFESSIONAL ENGINEER 10/23/19

J. BRAD PICKETT, PE NO. 74106

Hazen

HAZEN AND SAWYER
4000 HOLLYWOOD BOULEVARD, SUITE 750N
HOLLYWOOD, FLORIDA 33021
CERTIFICATE OF AUTHORIZATION NO. : 2771

CITY OF HALLANDALE BEACH

WATER TREATMENT PLANT
TRANSFER PUMP REPLACEMENT

Hallandale Beach

TRANSFER PUMP AREA
POWER AND LIGHTING
PLAN

DATE:	OCTOBER 2019
HAZEN NO.:	40621-001
CONTRACT NO.:	1
DRAWING NUMBER:	E-10

BID SET

File: C:\BMS\HAZEN-PW\DMS57876\E-10 Saved By: TRAHLAN Save Date: 2019/10/18 2:54 PM
PLOT DATE: 2019/10/23 10:57:43 AM BY: TRAHLAN

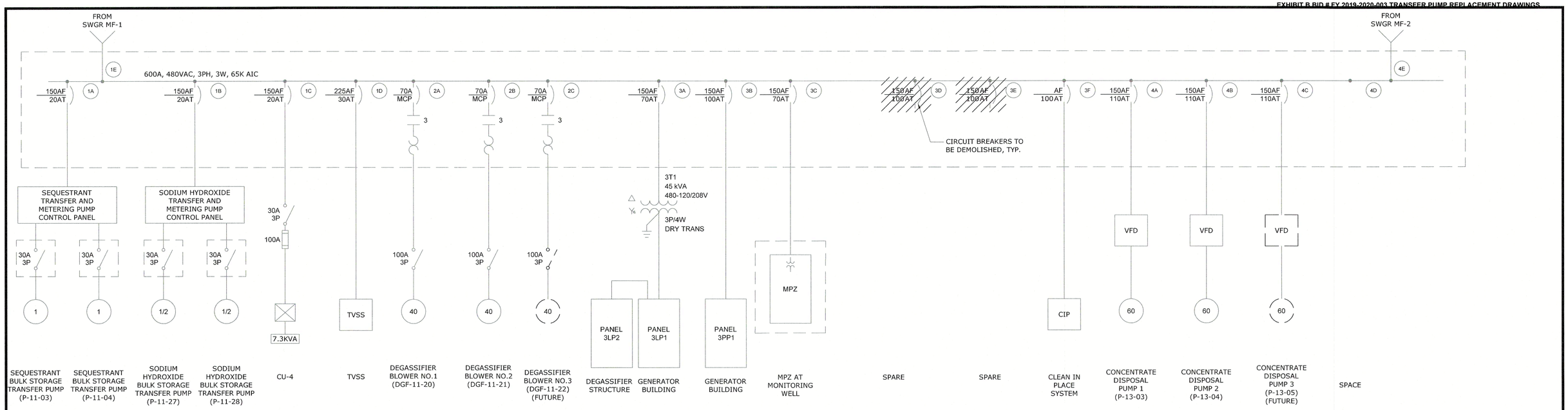

MEMBRANE MCC-1 - DEMOLITION

SINGLE LINE DIAGRAM

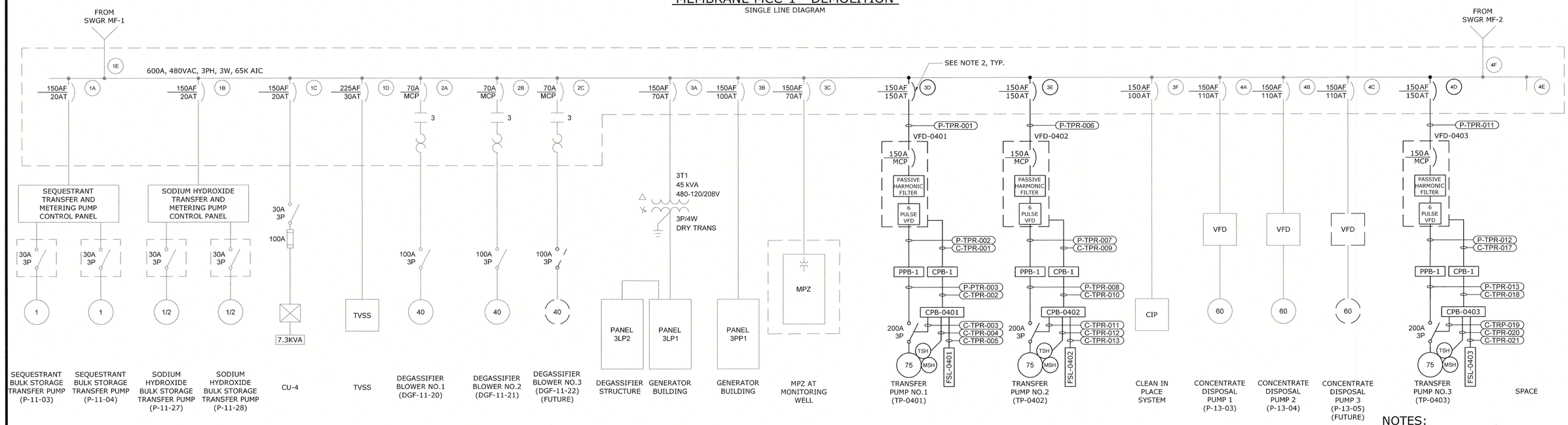

MEMBRANE MCC-1 - MODIFIED

SINGLE LINE DIAGRAM

NOTES:

1. EXISTING MOTOR CONTROL CENTER MCC-1 IS AN EATON FREEDOM 2100 SERIES. ORDER INFORMATION: MM100946 IT.002-FVC.
2. CONTRACTOR SHALL FURNISH AND INSTALL NEW CIRCUIT BREAKERS AS INDICATED. NEW CIRCUIT BREAKERS SHALL MATCH RATINGS OF EXISTING MCC, AT A MINIMUM.

REV	ISSUED FOR	DATE	BY
1	BID SET	10/19	GAB

PROJECT ENGINEER: L.Z.M.
DESIGNED BY: P. BOWLES
DRAWN BY: T. RAHLAN
CHECKED BY: B. PICKETT

IF THIS BAR DOES NOT MEASURE 1" THEN DRAWING IS NOT TO FULL SCALE (0 1/2" 1")

JOSEPH B. PICKETT LICENSE No. 74106 STATE OF FLORIDA PROFESSIONAL ENGINEER 10/23/19

J. BRAD PICKETT, PE No. 74106

Hazen

HAZEN AND SAWYER
4000 HOLLYWOOD BOULEVARD, SUITE 750N
HOLLYWOOD, FLORIDA 33021
CERTIFICATE OF AUTHORIZATION NO. : 2771

CITY OF HALLANDALE BEACH

WATER TREATMENT PLANT
TRANSFER PUMP REPLACEMENT

Hallandale Beach
PROGRESS. INNOVATION. OPPORTUNITY.

MEMBRANE MCC-1 SINGLE LINE DIAGRAMS

DATE: OCTOBER 2019
HAZEN NO.: 40621-001
CONTRACT NO.: 1
DRAWING NUMBER: E-11

BID SET

File: C:\BMS\HAZEN-PW\04557876\E-11 Saved By: TRAHLAN Save Date: 2019/10/18 2:07 PM
PLOT DATE: 2019/10/23 10:57:47 AM BY: TRAHLAN

NOTES:

1. EXISTING MOTOR CONTROL CENTER MCC-2 IS A SQUARE D MCC.
2. CONTRACTOR SHALL DEMOLISH EXISTING FEEDER CIRCUIT BREAKER, STARTERS, DISCONNECT SWITCHES, AND ASSOCIATED CONDUIT AND WIRE AS INDICATED. RETURN ELECTRICAL EQUIPMENT TO THE OWNER.
3. ALL DEMOLITION WORK SHALL BE COORDINATED WITH OWNER/ENGINEER PRIOR TO CONSTRUCTION. REFER TO SECTION 01520 FOR FURTHER DETAILS.
4. PROVIDE NEW BLANK DOORS FOR EACH STARTER BUCKET REMOVED. PROVIDE NEW LABEL "SPACE" FOR EACH BUCKET AS INDICATED IN DRAWING E-13.

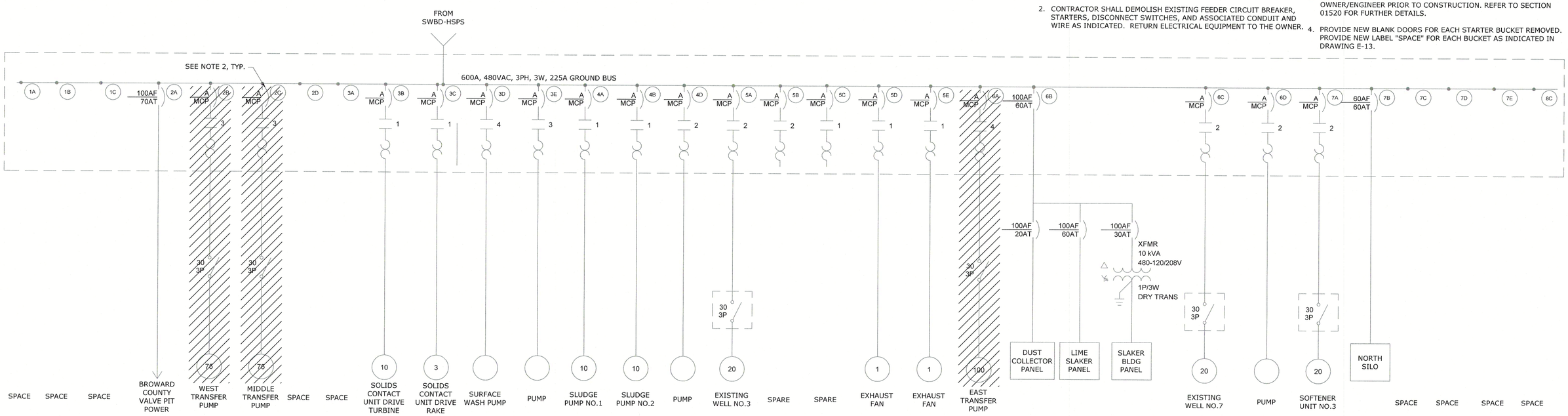

LIME PLANT MCC-2 - DEMOLITION

SINGLE LINE DIAGRAM

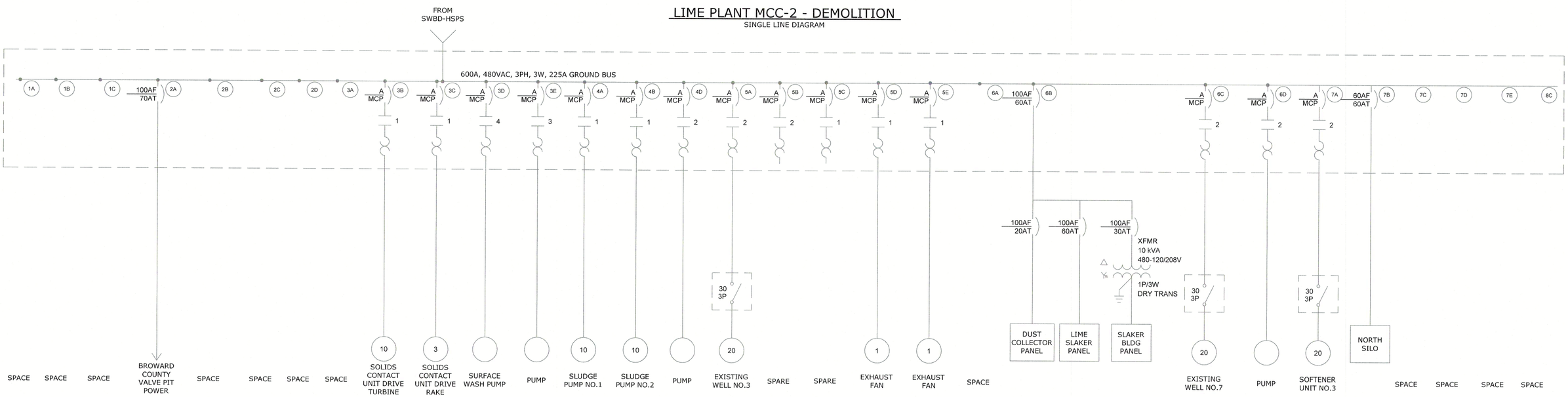

LIME PLANT MCC-2 - MODIFIED

SINGLE LINE DIAGRAM

REV	ISSUED FOR	DATE	BY
1	BID SET	10/19	GAB

PROJECT ENGINEER:	L.Z.M.
DESIGNED BY:	P. BOWLES
DRAWN BY:	T. RAHLAN
CHECKED BY:	B. PICKETT

IF THIS BAR DOES NOT MEASURE 1" THEN DRAWING IS NOT TO FULL SCALE (0 1/2" 1")

JOSEPH B. PICKETT LICENSE No. 74106 STATE OF FLORIDA PROFESSIONAL ENGINEER 10/23/19

J. BRAD PICKETT, PE No. 74106

Hazen

HAZEN AND SAWYER
4000 HOLLYWOOD BOULEVARD, SUITE 750N
HOLLYWOOD, FLORIDA 33021
CERTIFICATE OF AUTHORIZATION NO. : 2771

CITY OF HALLANDALE BEACH

WATER TREATMENT PLANT
TRANSFER PUMP REPLACEMENT

Hallandale Beach
PROSPER. INNOVATION. OPPORTUNITY

LIME PLANT MCC-2
SINGLE LINE DIAGRAMS

DATE:	OCTOBER 2019
HAZEN NO.:	40621-001
CONTRACT NO.:	1
DRAWING NUMBER:	E-12

BID SET

File: C:\BMS\HAZEN-PW\DMS5787876\E-12 Saved By TRAHLAN Save Date 2018/12/19 9:26 AM
PLOT DATE 2019/10/23 10:57:50 AM BY: TRAHLAN

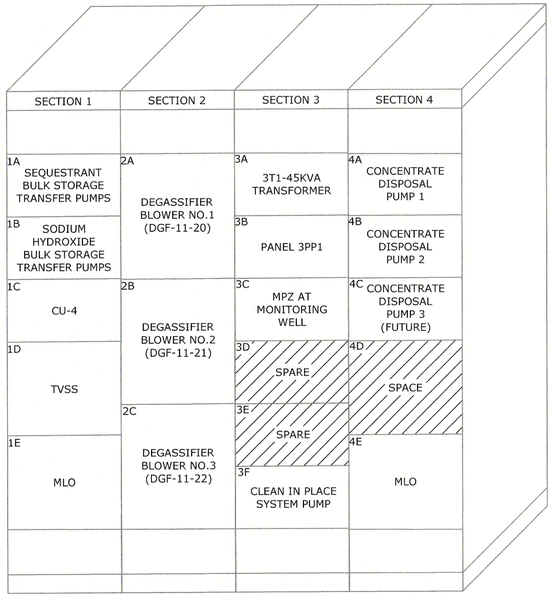

MEMBRANE MCC-1 - DEMOLITION

ELEVATION (NTS)

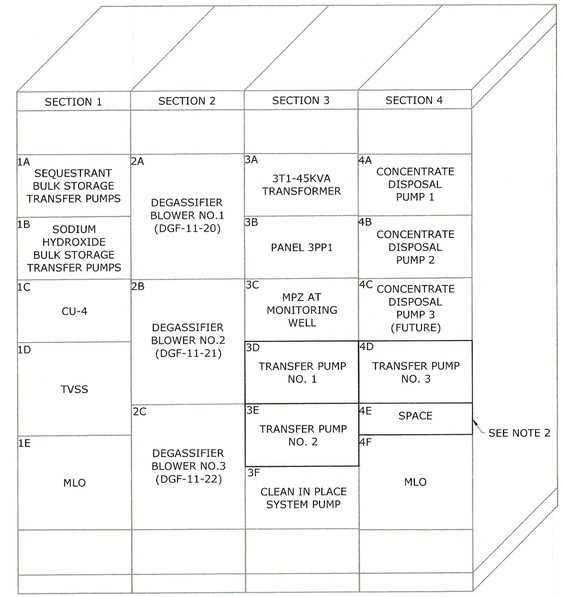

MEMBRANE MCC-1 - MODIFIED

ELEVATION (NTS)

NOTES:

1. CONTRACTOR SHALL PROVIDE NEW NAMEPLATE AND RELABEL MCC BUCKET AS SPACE.
2. CONTRACTOR SHALL FURNISH AND INSTALL NEW DOOR FOR THE SPACE CREATED. NEW DOOR SHALL MATCH EXISTING LINEUP.

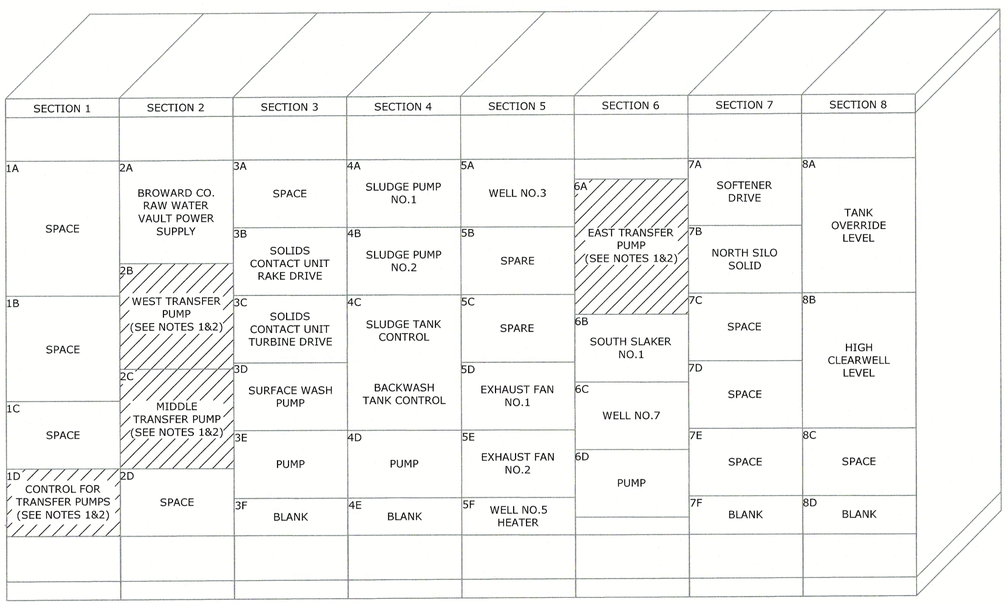

LIME PLANT MCC-2 - DEMOLITION

ELEVATION (NTS)

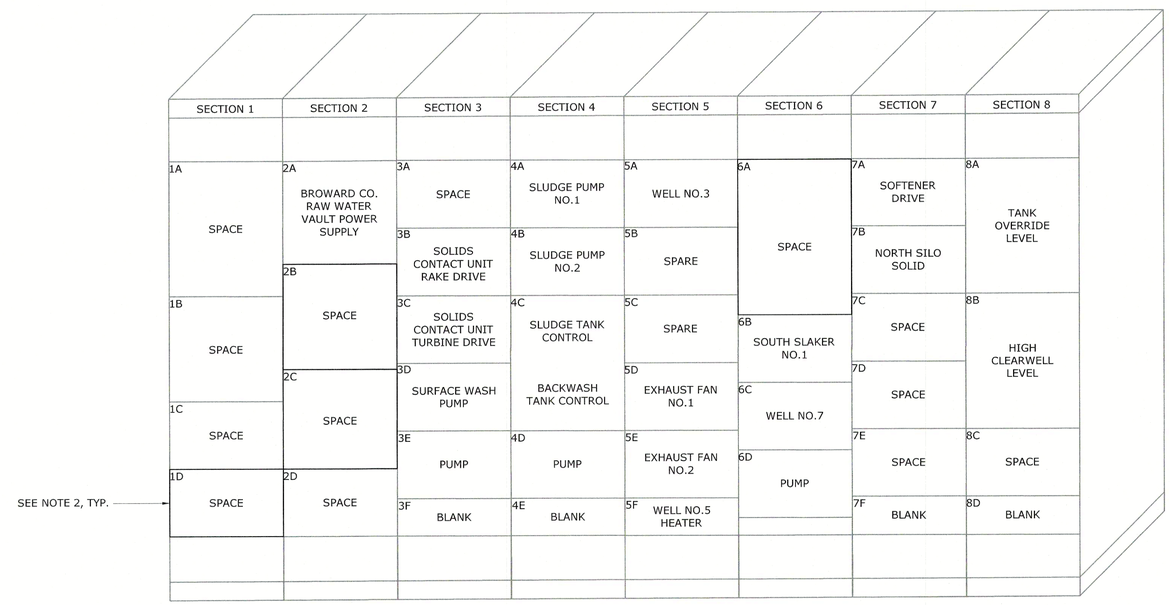

LIME PLANT MCC-2 - MODIFIED

ELEVATION (NTS)

REV	ISSUED FOR	DATE	BY
1	BID SET	10/19	GAB

PROJECT ENGINEER:	L.Z.M.
DESIGNED BY:	P. BOWLES
DRAWN BY:	T. RAHLAN
CHECKED BY:	B. PICKETT

IF THIS BAR DOES NOT MEASURE 1" THEN DRAWING IS NOT TO FULL SCALE 0 1/2" 1"

JOSEPH B. PICKETT LICENSE No. 74106 STATE OF FLORIDA PROFESSIONAL ENGINEER 10/23/19

J. BRAD PICKETT, PE No. 74106

Hazen

HAZEN AND SAWYER
4000 HOLLYWOOD BOULEVARD, SUITE 750N
HOLLYWOOD, FLORIDA 33021
CERTIFICATE OF AUTHORIZATION NO. : 2771

CITY OF HALLANDALE BEACH

WATER TREATMENT PLANT TRANSFER PUMP REPLACEMENT

Hallandale Beach PROGRESS. INNOVATION. OPPORTUNITY.

MEMBRANE MCC-1 & LIME PLANT MCC-2 ELEVATIONS

DATE:	OCTOBER 2019
HAZEN NO.:	40621-001
CONTRACT NO.:	1
DRAWING NUMBER:	E-13

BID SET

File: C:\Bwd\HAZEN-PW\DMS5783\E-13 Saved By: TRAHLAN Save Date: 2019/10/23 10:57:53 AM BY: TRAHLAN
Plot DATE: 2019/10/23 10:57:53 AM

480 VOLTS
3 PHASE, 3 WIRE

3PP1
LUG ONLY
100A 3P

TYPE: NEMA 12
MOUNT: SURFACE

MODS	DESCRIPTION	WIRE	TRIP	POLE	No.	VOLT-AMPERES A	VOLT-AMPERES B	VOLT-AMPERES C	VOLT-AMPERES A	VOLT-AMPERES B	VOLT-AMPERES C	No.	POLE	TRIP	WIRE	DESCRIPTION	MODS
-	FLOW VALVE 11-15		20	3	1	500			500			2	3	20	SEE RISER	MOV-0403	-
					3		500			500		4					
					5			500			500	6					
-	FLOW VALVE 11-16		20	3	7	500			500			8	3	20	SEE RISER	MOV-0404	-
					9		500			500		10					
					11			500			500	12					
-	FLOW VALVE 11-17 FUT		20	3	13	-			500			14	3	20	SEE RISER	MOV-0641	-
					15		-			500		16					
					17			-			500	18					
-	MOTOR OPERATED VALVE 13-03		20	3	19	500			-			20	3	20		SPARE	-
					21		500			-		22					
					23			500			-	24					
-	MOTOR OPERATED VALVE 13-04		20	3	25	500			-			26	3	20		SPARE	-
					27		500			-		28					
					29			500			-	30					
-	MOTOR OPERATED VALVE 13-05 FUT		20	3	31	-			-			32	3	20		SPARE	-
					33		-			-		34					
					35			-			-	36					
-	MOTOR OPERATED VALVE 13-06		20	3	37	500			-			38	3	20		SPARE	-
					39		500			-		40					
					41			500			-	42					

	A	B	C	A	B	C	
TOTAL	2,500	2,500	2,500	1,500	1,500	1,500	TOTAL
PHASE TOTAL	4,000	4,000	4,000	TOTAL LOAD (VA) 12,000			
				TOTAL LOAD (A) 14			

SEE NOTE 1, TYP.

MODIFICATION (MODS) LEGEND:
EPD - GROUND FAULT CIRCUIT INTERRUPTER (30mA)
GFCI - GROUND FAULT CIRCUIT INTERRUPTER (5mA)
LOD - LOCK-ON DEVICE
LFD - LOCK-OFF DEVICE

NOTES:
160kA SPD
CUTLER-HAMMER
PANEL TYPE: PRL3A
CAT. NO.: YS2060
JOB NO.: MMI00946-027

208/120 VOLTS
3 PHASE, 4 WIRE

3LP1
MAIN BREAKER
150A 3P

TYPE: NEMA 1
MOUNT: SURFACE

MODS	DESCRIPTION	WIRE	TRIP	POLE	No.	VOLT-AMPERES A	VOLT-AMPERES B	VOLT-AMPERES C	VOLT-AMPERES A	VOLT-AMPERES B	VOLT-AMPERES C	No.	POLE	TRIP	WIRE	DESCRIPTION	MODS
-	LIGHTS, E, RM, 300		20	1	1	900			720			2	1	20		OUTLETS, E RM, 300	-
-	LIGHTS, GEN, 301		20	1	3		900			720		4	1	20		OUTLETS, E RM, 301	-
-	SPARE		20	1	5			-			500	6	1	20		EXIT LIGHTS	-
-	GEN#1 BATTERY CHARGER		20	1	7	500			1,000			8	1	20		GEN#1 HEATER	-
-	SPARE		20	1	9		-			500		10	1	20		EXHAUST GEN RM	-
-	GEN#1 JACKET HEATER		50	2	11			1,000			200	12	1	20		W. VAULT SUMP	-
					13	1,000			-			14	1	20		SPARE	-
-	GEN#2 JACKET HEATER		50	2	15		1,000			100		16	1	20		AIT-0422	-
					17			1,000			-	18	1	20		SPARE	-
-	GEN#2 DAY TANK		20	1	19	300			1,000			20	1	20		DAY TANK #1 PUMP	-
-	GEN#2 BATTERY CHARGER		20	1	21		500			1,000		22	1	20		DAY TANK #2 PUMP	-
-	OUTSIDE LIGHTS		20	1	23			500			1,000	24	1	20		DAY TANK #3 PUMP	-
-	PLC-2		20	1	25	1,000			1,000			26	1	20		DAY TANK #4 PUMP	-
-	LIT-0804 (BULK ROOM)		20	1	27		100			-		28	1	20		SPARE	-
					29			1,500			-	30	1	20		SPARE	-
-	AIR HANDLER #4		15	2	31	1,500			-			32	1	20		SPARE	-
					33		500			-		34	2	50		SPARE	-
-	CONTACTOR CO3		20	1	35			100			-	36					
-	FIT-0403 (SEE NOTE 1)	SEE RISER	20	1	37	100			3,467			38	3	50		SUB-PANEL 3LP2	-
-	FIT-0641 (SEE NOTE 1)	SEE RISER	20	1	39		-			3,467		40					
-	SPARE		20	1	41			-			3,467	42					
-	SPARE																

	A	B	C	A	B	C	
TOTAL	5,300	3,000	4,100	7,187	5,787	5,167	TOTAL
PHASE TOTAL	12,487	8,787	9,267	TOTAL LOAD (VA) 30,541			
				TOTAL LOAD (A) 85			

MODIFICATION (MODS) LEGEND:
EPD - GROUND FAULT CIRCUIT INTERRUPTER (30mA)
GFCI - GROUND FAULT CIRCUIT INTERRUPTER (5mA)
LOD - LOCK-ON DEVICE
LFD - LOCK-OFF DEVICE

NOTES:
22K AIC
160kA SPD
CUTLER-HAMMER
PANEL TYPE: PRL1A
CAT. NO.: YS2060
JOB NO.: MMI00946-033

NOTES:

1. CONTRACTOR SHALL UTILIZE EXISTING SPARE CIRCUIT BREAKERS IN EXISTING PANEL TO SUPPLY NEW LOADS AS INDICATED.

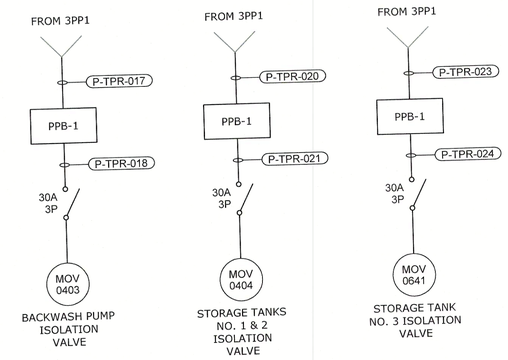

ISOLATION VALVES
RISER DIAGRAMS

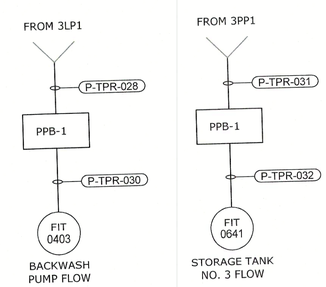

INSTRUMENTATION
RISER DIAGRAMS

REV	ISSUED FOR	DATE	BY
1	BID SET	10/19	GAB

PROJECT ENGINEER: L.Z.M.
DESIGNED BY: P. BOWLES
DRAWN BY: T. RAHLAN
CHECKED BY: B. PICKETT
IF THIS BAR DOES NOT MEASURE 1" THEN DRAWING IS NOT TO FULL SCALE 0 1/2" 1"

JOSEPH B. PICKETT LICENSE No. 74106 STATE OF FLORIDA PROFESSIONAL ENGINEER 10/23/19
J. BRAD PICKETT, PE No. 74106

Hazen
HAZEN AND SAWYER
4000 HOLLYWOOD BOULEVARD, SUITE 750N
HOLLYWOOD, FLORIDA 33021
CERTIFICATE OF AUTHORIZATION NO. : 2771

CITY OF HALLANDALE BEACH
WATER TREATMENT PLANT
TRANSFER PUMP REPLACEMENT

Hallandale Beach PROSPECT, INNOVATION, OPPORTUNITY

PANEL SCHEDULES AND RISER DIAGRAMS

DATE: OCTOBER 2019
HAZEN NO.: 40621-001
CONTRACT NO.: 1
DRAWING NUMBER: E-14

File: C:\BMS\HAZEN-PW\DMS7876\E-14 Saved By: TRAHLAN Save Date: 2019/10/18 2:22 PM
PLOT DATE: 2019/10/23 10:57:56 AM BY: TRAHLAN

NOTES:

1. VFDS SHALL BE PROVIDED WITH INTERNAL CONTACTS TO REMOVE HARMONIC FILTER CAPACITOR FROM THE SYSTEM WHEN DRIVES ARE NOT IN USE.
2. CONTRACTOR SHALL FURNISH AND INSTALL 3 FT. FLEXIBLE CONDUIT.
3. VFD INPUTS, OUTPUT ALARMS, SPEED REFERENCE, AND HOA FEEDBACK SHALL BE PROGRAMMABLE VFD INPUTS AND OUTPUTS VIA THE CAT-6 CONNECTION TO THE PLC.

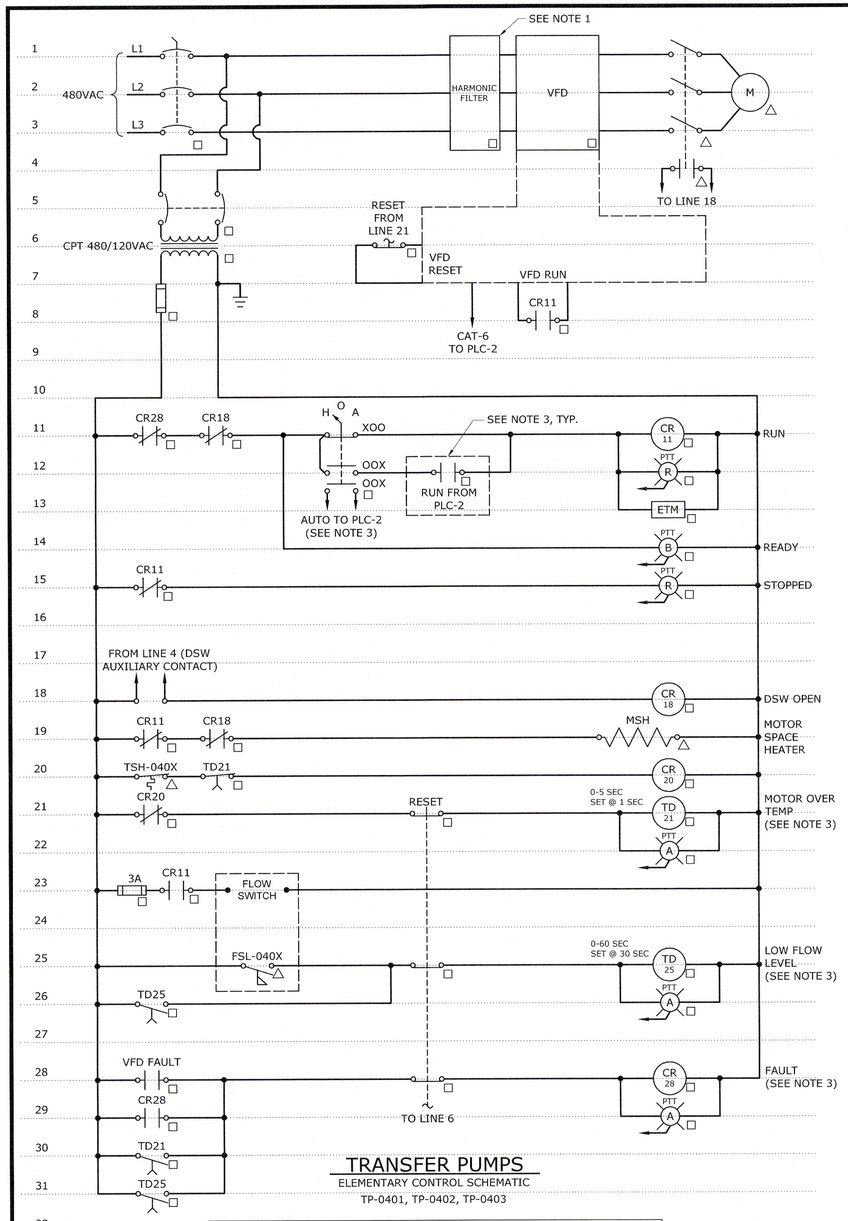

TRANSFER PUMPS

ELEMENTARY CONTROL SCHEMATIC

TP-0401, TP-0402, TP-0403

TRANSFER PUMPS

ELEMENTARY CONTROL SCHEMATIC

TRANSFER PUMP NO.X (TP-040X)	FSL-040X	TSH-040X
TRANSFER PUMP NO.1 (TP-0401)	FSL-0401	TSH-0401
TRANSFER PUMP NO.2 (TP-0402)	FSL-0402	TSH-0402
TRANSFER PUMP NO.3 (TP-0403)	FSL-0403	TSH-0403

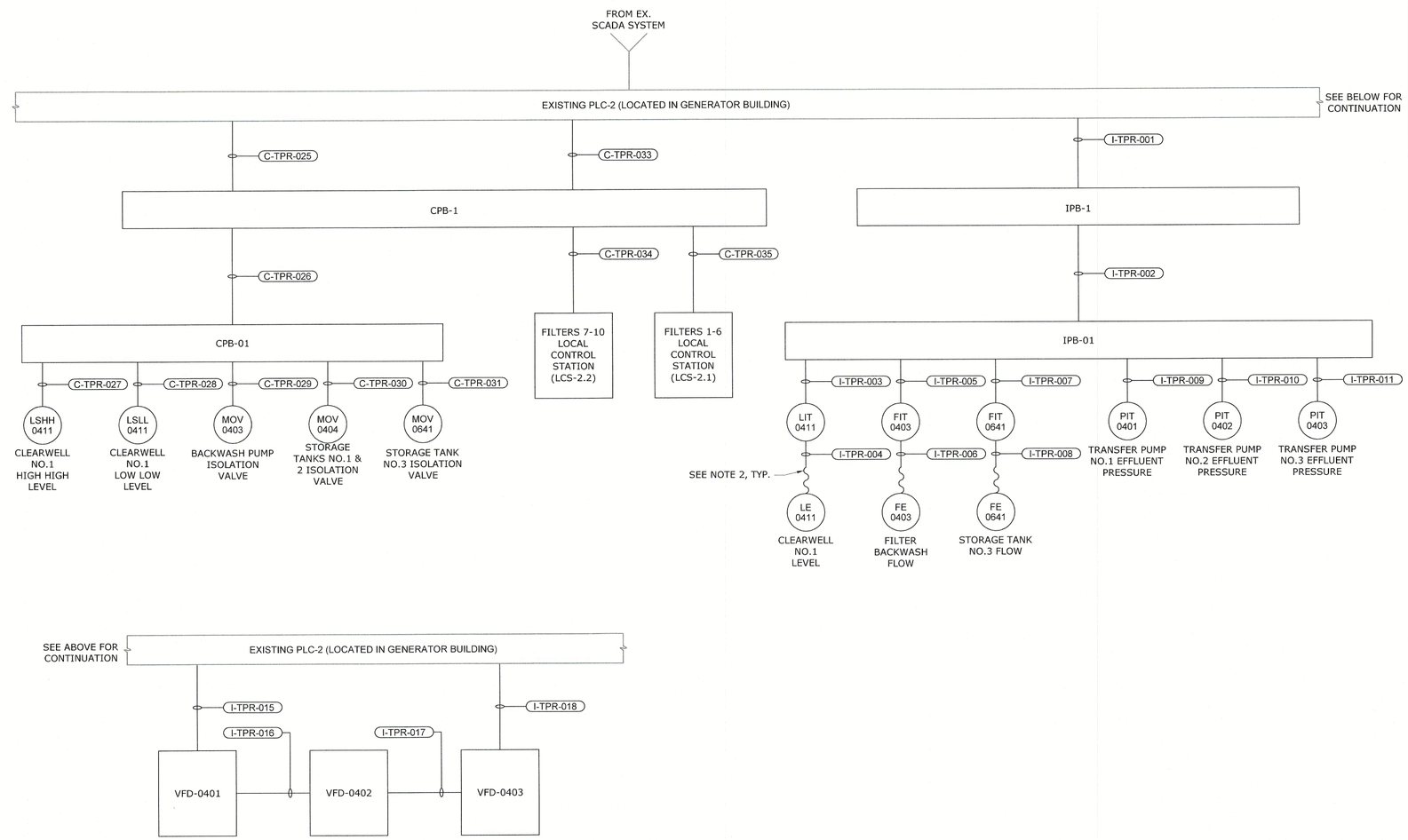

PLC-2

PARTIAL CONTROL ONE LINE DIAGRAM

REV	ISSUED FOR	DATE	BY
1	BID SET	10/19	GAB

PROJECT ENGINEER:	L.Z.M.
DESIGNED BY:	P. BOWLES
DRAWN BY:	T. RAHLAN
CHECKED BY:	B. PICKETT

IF THIS BAR DOES NOT MEASURE 1" THEN DRAWING IS NOT TO FULL SCALE 0 1/2" 1"

JOSEPH B. PICKETT LICENSE No. 74106 STATE OF FLORIDA PROFESSIONAL ENGINEER 10/23/19

J. BRAD PICKETT, PE NO. 74106

Hazen

HAZEN AND SAWYER
4000 HOLLYWOOD BOULEVARD, SUITE 750N
HOLLYWOOD, FLORIDA 33021
CERTIFICATE OF AUTHORIZATION NO. : 2771

CITY OF HALLANDALE BEACH

WATER TREATMENT PLANT
TRANSFER PUMP REPLACEMENT

Hallandale Beach

ELEMENTARY CONTROL SCHEMATIC AND CONTROL ONE LINE

DATE:	OCTOBER 2019
HAZEN NO.:	40621-001
CONTRACT NO.:	1
DRAWING NUMBER:	E-15

BID SET

File: C:\BMS\HAZEN-PW\DMS35976\E-15 Saved By: TRAHLAN Save Date: 2019/10/18 2:41 PM
PLOT DATE: 2019/10/23 10:58:00 AM By: TRAHLAN

NOTES:

1. CONTRACTOR NOTE ALL CONDUIT TAGS DENOTE WITH "I" PREFIX SHALL BE A METALLIC RACEWAY COMPLETE FROM SOURCE TO LOAD. REFER TO THE REQUIREMENTS OF SPECIFICATION SECTION 16111 FOR FURTHER DETAILS.

CONDUIT NO.	SIZE	FROM	TO	CONDUCTORS	REMARKS
P-TPR-001	2"	MEMBRANE MCC-1	TRANSFER PUMP NO.1 VFD (VFD-0401)	3#1/0, #6GND	TP-0401
P-TPR-002	2"	TRANSFER PUMP NO.1 VFD (VFD-0401)	PPB-1	3#1/0, #6GND	VFD CABLE, TP-0401
P-TPR-003	2"	PPB-1	TRANSFER PUMP NO.1 (TP-0401)	3#1/0, #6GND	VFD CABLE, VIA DSW
P-TPR-004				NOT USED	
P-TPR-005				NOT USED	
P-TPR-006	2"	MEMBRANE MCC-1	TRANSFER PUMP NO.2 VFD (VFD-0402)	3#1/0, #6GND	TP-0402
P-TPR-007	2"	TRANSFER PUMP NO.2 VFD (VFD-0402)	PPB-1	3#1/0, #6GND	VFD CABLE, TP-0402
P-TPR-008	2"	PPB-1	TRANSFER PUMP NO.2 (TP-0402)	3#1/0, #6GND	VFD CABLE, VIA DSW
P-TPR-009				NOT USED	
P-TPR-010				NOT USED	
P-TPR-011	2"	MEMBRANE MCC-1	TRANSFER PUMP NO.3 VFD (VFD-0403)	3#1/0, #6GND	TP-0403
P-TPR-012	2"	TRANSFER PUMP NO.3 VFD (VFD-0403)	PPB-1	3#1/0, #6GND	VFD CABLE, TP-0403
P-TPR-013	2"	PPB-1	TRANSFER PUMP NO.3 (TP-0403)	3#1/0, #6GND	VFD CABLE, VIA DSW
P-TPR-014				NOT USED	
P-TPR-015				NOT USED	
P-TPR-016				NOT USED	
P-TPR-017	1"	PANEL 3PP1	PPB-1	3#12, #12GND	
P-TPR-018	1"	PPB-1	MOV-0403	3#12, #12GND	VIA DSW
P-TPR-019				NOT USED	
P-TPR-020	1"	PANEL 3PP1	PPB-1	3#12, #12GND	
P-TPR-021	1"	PPB-1	MOV-0404	3#12, #12GND	VIA DSW
P-TPR-022				NOT USED	
P-TPR-023	1"	PANEL 3PP1	PPB-1	3#12, #12GND	
P-TPR-024	1"	PPB-1	MOV-0641	3#12, #12GND	VIA DSW
P-TPR-025				NOT USED	
P-TPR-026				NOT USED	
P-TPR-027				NOT USED	
P-TPR-028	1"	PANEL 3LP1	PPB-1	2#12, #12GND	
P-TPR-029		PPB-1	FIT-0403	2#12, #12GND	
P-TPR-030				NOT USED	
P-TPR-031	1"	PANEL 3LP1	PPB-1	2#12, #12GND	
P-TPR-032	1"	PPB-1	FIT-0641	2#12, #12GND	
P-TPR-033				NOT USED	
P-TPR-034				NOT USED	
P-TPR-035				NOT USED	

CONDUIT NO.	SIZE	FROM	TO	CONDUCTORS	REMARKS
C-TPR-001	1"	TRANSFER PUMP NO.1 VFD (VFD-0401)	CPB-1	4#12, 10#14, #12GND	
C-TPR-002	1"	CPB-1	CPB-0401	4#12, 10#14, #12GND	TP-0401
C-TPR-003	3/4"	CPB-0401	TP-0401 DSW	2#14, #14GND	
C-TPR-004	3/4"	CPB-0401	TRANSFER PUMP NO.1 (TP-0401)	2#12, 4#14, #12GND	TSH & MSH
C-TPR-005	3/4"	CPB-0401	FSL-0401	2#12, 4#14, #12GND	
C-TPR-006				NOT USED	
C-TPR-007				NOT USED	
C-TPR-008				NOT USED	
C-TPR-009	1"	TRANSFER PUMP NO.2 VFD (VFD-0402)	CPB-1	4#12, 10#14, #12GND	
C-TPR-010	1"	CPB-1	CPB-0402	4#12, 10#14, #12GND	TP-0402
C-TPR-011	3/4"	CPB-0402	TP-0402 DSW	2#14, #14GND	
C-TPR-012	3/4"	CPB-0402	TRANSFER PUMP NO.2 (TP-0402)	2#12, 4#14, #12GND	TSH & MSH
C-TPR-013	3/4"	CPB-0402	FSL-0402	2#12, 4#14, #12GND	
C-TPR-014				NOT USED	
C-TPR-015				NOT USED	
C-TPR-016				NOT USED	
C-TPR-017	1"	TRANSFER PUMP NO.3 VFD (VFD-0403)	CPB-1	4#12, 10#14, #12GND	
C-TPR-018	1"	CPB-1	CPB-0403	4#12, 10#14, #12GND	TP-0403
C-TPR-019	3/4"	CPB-0403	TP-0403 DSW	2#14, #14GND	
C-TPR-020	3/4"	CPB-0403	TRANSFER PUMP NO.3 (TP-0403)	2#12, 4#14, #12GND	TSH & MSH
C-TPR-021	3/4"	CPB-0403	FSL-0403	2#12, 4#14, #12GND	
C-TPR-022				NOT USED	
C-TPR-023				NOT USED	
C-TPR-024				NOT USED	
C-TPR-025	2"	PLC-2	CPB-1	56#14, #14GND	
C-TPR-026	2"	CPB-1	CPB-01	56#14, #14GND	
C-TPR-027	3/4"	CPB-01	LSHH-0411	4#14, #14GND	
C-TPR-028	3/4"	CPB-01	LSLL-0411	4#14, #14GND	
C-TPR-029	1"	CPB-01	MOV-0403	16#14, #14GND	
C-TPR-030	1"	CPB-01	MOV-0404	16#14, #14GND	
C-TPR-031	1"	CPB-01	MOV-0641	16#14, #14GND	
C-TPR-032				NOT USED	
C-TPR-033	2"	PLC-2	CPB-1	4 (FIBER OPTIC CABLE)	
C-TPR-034	1"	CPB-1	FILTER 7-10 LCS (LCS-2.2)	2 (FIBER OPTIC CABLE)	
C-TPR-035	1"	CPB-1	FILTER 1-6 LCS (LCS-2.1)	2 (FIBER OPTIC CABLE)	
C-TPR-036				NOT USED	
C-TPR-037				NOT USED	
C-TPR-038				NOT USED	
C-TPR-039				NOT USED	
C-TPR-040				NOT USED	

CONDUIT NO.	SIZE	FROM	TO	CONDUCTORS	REMARKS
I-TPR-001	2"	PLC-2	IPB-1	12(2/C#16TSH), #14GND	
I-TPR-002	2"	IPB-1	IPB-01	12(2/C#16TSH), #14GND	
I-TPR-003	1"	IPB-01	LIT-0411	2(2/C#16TSH), #14GND	
I-TPR-004	3/4"	LIT-0411	LE-0411	CABLE BY MFR	
I-TPR-005	1"	IPB-01	FIT-0403	2(2/C#16TSH), #14GND	
I-TPR-006	3/4"	FIT-0403	FE-0403	CABLE BY MFR	
I-TPR-007	1"	IPB-01	FIT-0641	2(2/C#16TSH), #14GND	
I-TPR-008	3/4"	FIT-0641	FE-0641	CABLE BY MFR	
I-TPR-009	1"	IPB-01	PIT-0401	2(2/C#16TSH), #14GND	
I-TPR-010	1"	IPB-01	PIT-0402	2(2/C#16TSH), #14GND	
I-TPR-011	1"	IPB-01	PIT-0403	2(2/C#16TSH), #14GND	
I-TPR-012				NOT USED	
I-TPR-013				NOT USED	
I-TPR-014				NOT USED	
I-TPR-015	3/4"	PLC-2	TRANSFER PUMP NO.1 VFD (VFD-0401)	2(CAT-6), #14GND	
I-TPR-016	3/4"	TRANSFER PUMP NO.1 VFD (VFD-0401)	TRANSFER PUMP NO.2 VFD (VFD-0402)	2(CAT-6), #14GND	
I-TPR-017	3/4"	TRANSFER PUMP NO.2 VFD (VFD-0402)	TRANSFER PUMP NO.3 VFD (VFD-0403)	2(CAT-6), #14GND	
I-TPR-018	3/4"	TRANSFER PUMP NO.3 VFD (VFD-0403)	PLC-2	2(CAT-6), #14GND	
I-TPR-019				NOT USED	
I-TPR-020				NOT USED	

REV	ISSUED FOR	DATE	BY
1	BID SET	10/19	GAB

PROJECT ENGINEER: L.Z.M.
DESIGNED BY: P. BOWLES
DRAWN BY: T. RAHLAN
CHECKED BY: B. PICKETT
IF THIS BAR DOES NOT MEASURE 1" THEN DRAWING IS NOT TO FULL SCALE 0 1/2" 1"

JOSEPH B. PICKETT LICENSE No. 74106 STATE OF FLORIDA PROFESSIONAL ENGINEER 10/23/19

J. BRAD PICKETT, PE NO. 74106

Hazen
HAZEN AND SAWYER
4000 HOLLYWOOD BOULEVARD, SUITE 750N
HOLLYWOOD, FLORIDA 33021
CERTIFICATE OF AUTHORIZATION NO. : 2771

CITY OF HALLANDALE BEACH

WATER TREATMENT PLANT
TRANSFER PUMP REPLACEMENT

Hallandale Beach PROGRESS. INNOVATION. OPPORTUNITY

CONDUIT AND WIRE SCHEDULES

DATE: OCTOBER 2019
HAZEN NO.: 40621-001
CONTRACT NO.: 1
DRAWING NUMBER: E-16

BID SET

File: C:\BMS\HAZEN-FW\DMS5787\E-16 Saved By: TRAHLAN Save Date: 2019/10/18 3:30 PM
PLOT DATE: 2019/10/23 10:58:02 AM BY: TRAHLAN

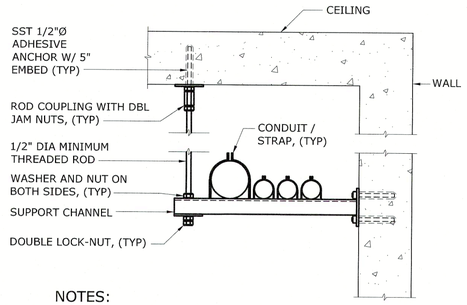

NOTES:

1. SPACE SUPPORTS AT 5'-0" MAXIMUM. HANGER SPACING SHALL BE BASED ON MAXIMUM LOAD.
2. ALL THREAD ROD SHALL BE USED ONLY FOR DUAL RACK.
3. SUPPORT CHANNEL AND HARDWARE MATERIALS OF CONSTRUCTION SHALL BE PER SECTION 16190.

CONDUIT SUPPORT RACK

1611403

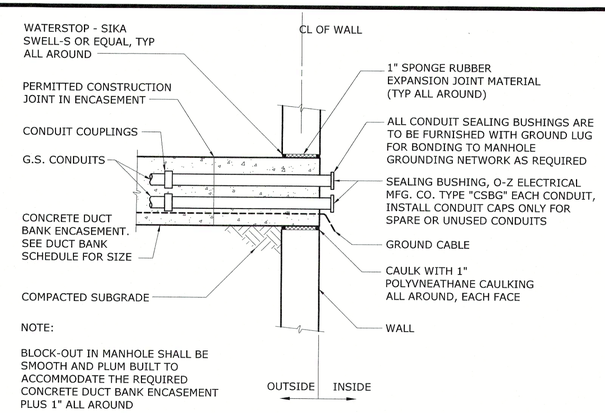

DUCT BANK TERMINATION AT MANHOLE

1611804

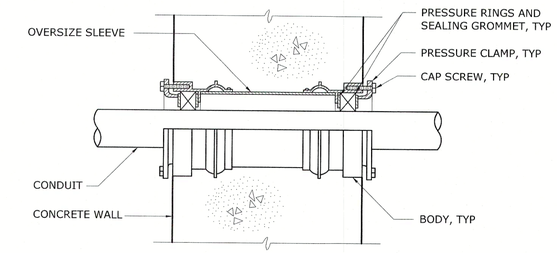

NOTE: USE O-Z/GEDNEY SEAL, TYPE "FSK", "WSK", OR EQUAL

CONDUIT THROUGH WALL SEAL

1611102

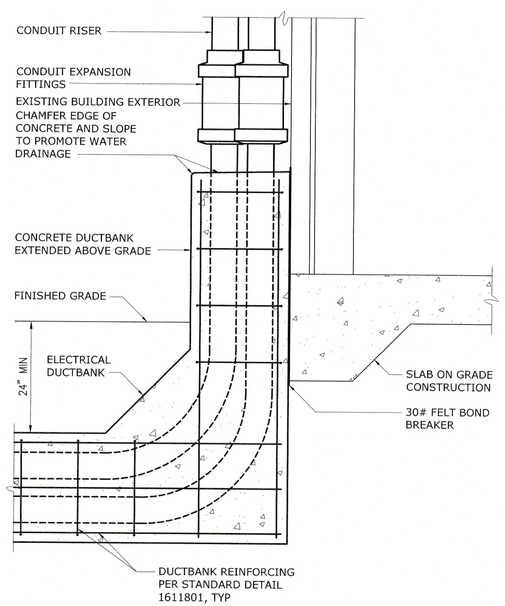

DUCTBANK ABUTMENT (FLOATING) TO EXISTING STRUCTURE

1611811

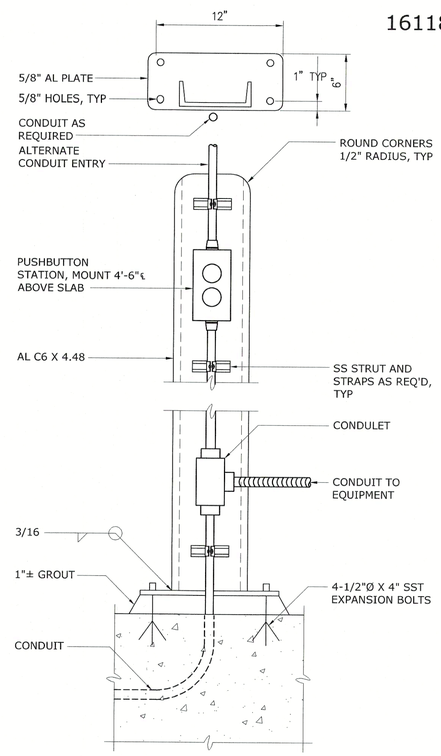

ELEVATION

NOTES:

1. COAT ALUMINUM SURFACES IN CONTACT WITH CONCRETE PER SPECIFICATIONS.
2. SUPPLY 1'-2" DIAMETER X 2'-6" DEEP FOUNDATION WHERE MOUNTING SURFACE IS NOT AVAILABLE.
3. USE SST WASHERS, NUTS AND BOLTS FOR MOUNTING DEVICES.

TYPICAL PUSHBUTTON STATION INSTALLATION DETAIL

1613001

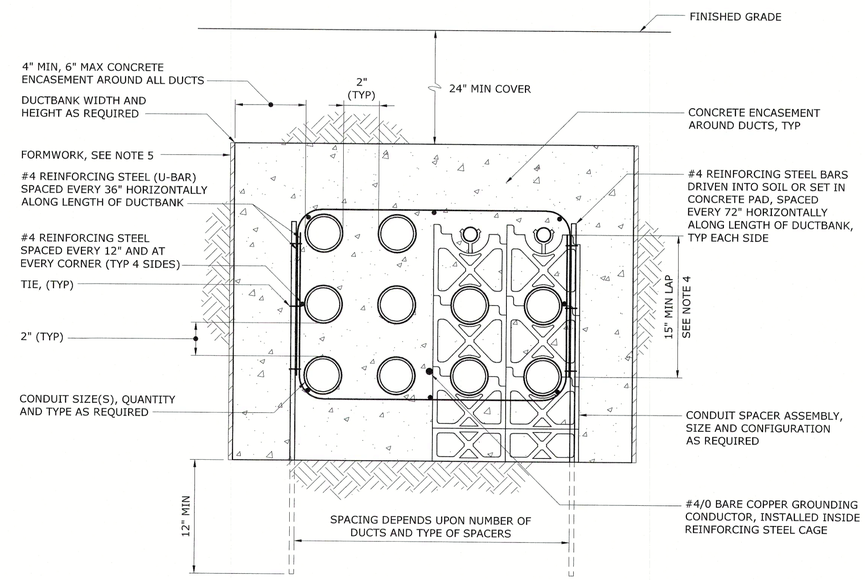

NOTES:

1. CONCRETE SHALL BE FURNISHED AND INSTALLED IN ACCORDANCE WITH SPECIFICATION SECTION 03300.
2. REINFORCING STEEL AND TIES SHALL BE FURNISHED AND INSTALLED IN ACCORDANCE WITH SPECIFICATION SECTION 03200. OVERLAP FOR REINFORCING STEEL SPLICES ALONG THE DUCTBANK LENGTH SHALL BE 15", MINIMUM.
3. CONDUIT SPACERS ARE REQUIRED IN ACCORDANCE WITH SPECIFICATION SECTION 16118. HORIZONTAL SPACING OF CONDUIT SPACER ASSEMBLIES ALONG LENGTH OF DUCTBANK SHALL AS SHOWN IN THE TABLE.
4. FOR DUCTBANKS LESS THAN 15" IN HEIGHT, THE LAP SHALL BE THE HEIGHT OF THE DUCTBANK.
5. IN POOR SOIL CONDITIONS, DUCTBANKS SHALL BE FORMED WITH FORMING MATERIALS TO MAINTAIN 4" MINIMUM ENCASEMENT. WHERE SOIL CONDITIONS PERMIT AND THE EXCAVATION IS MAINTAINED FOR A 4" MINIMUM TO 10" MAXIMUM ENCASEMENT, THE FORMWORK CAN BE OMITTED.

MAX SPACING BETWEEN CONDUIT SPACER ASSEMBLIES

CONDUIT SIZE	SPACING
1"	3 FT
1 1/4–2"	5 FT
2 1/2–3"	6 FT
3 1/2–5"	7 FT
6"	8 FT

TYPICAL DUCTBANK SECTION

1611801

REV	ISSUED FOR	DATE	BY
1	BID SET	10/19	GAB

PROJECT ENGINEER:	L.Z.M.
DESIGNED BY:	P. BOWLES
DRAWN BY:	T. RAHLAN
CHECKED BY:	B. PICKETT
IF THIS BAR DOES NOT MEASURE 1" THEN DRAWING IS NOT TO FULL SCALE	0 1/2" 1"

JOSEPH B. PICKETT LICENSE No. 74106 STATE OF FLORIDA PROFESSIONAL ENGINEER 10/23/19

J. BRAD PICKETT, PE NO. 74106

Hazen

HAZEN AND SAWYER
4000 HOLLYWOOD BOULEVARD, SUITE 750N
HOLLYWOOD, FLORIDA 33021
CERTIFICATE OF AUTHORIZATION NO. : 2771

CITY OF HALLANDALE BEACH

WATER TREATMENT PLANT TRANSFER PUMP REPLACEMENT

Hallandale Beach PROGRESS. INNOVATION. OPPORTUNITY

ELECTRICAL DETAILS SHEET 1

DATE:	OCTOBER 2019
HAZEN NO.:	40621-001
CONTRACT NO.:	1
DRAWING NUMBER:	E-17

BID SET

File: C:\BMS\HAZEN-PW\DMS27876\E-17 Saved By: TRAHLAN Save Date: 2018/12/18 3:25 PM
PLOT DATE: 2019/10/23 10:58:05 AM BY: TRAHLAN

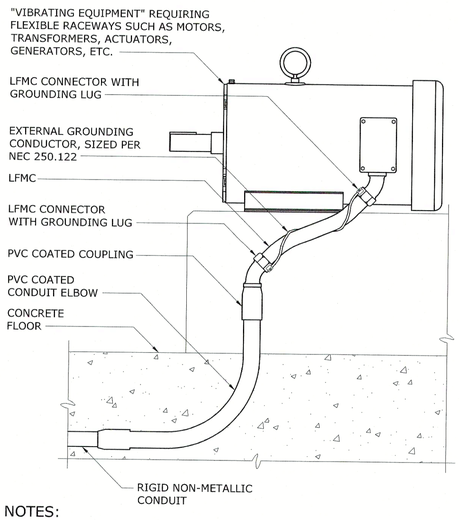

NOTES:

1. WHERE NON-METALLIC CONDUIT TRANSITIONS TO RIGID METALLIC CONDUIT AND / OR LIQUIDTIGHT METALLIC CONDUIT, (LFMC), TO FEED VIBRATING TYPE LOADS, THE CONTRACTOR SHALL FURNISH AND INSTALL AN EXTERNAL BARE COPPER GROUNDING CONDUCTOR AND APPROVED GROUNDING LFMC CONNECTORS TO ENSURE GROUND CONTINUITY TO THE RIGID METALLIC CONDUIT AS SHOWN. THE GROUNDING CONDUCTOR SHALL BE SIZED ACCORDING TO NEC 250.122 AND BE NEATLY WRAPPED AROUND LFMC AS SHOWN. LFMC INSTALLED IN THIS MANNER CANNOT BE USED FOR A CONTINUOUS GROUND PATH PER NEC 350.60.

LFMC CONDUIT GROUND STRAP DETAIL

1611104

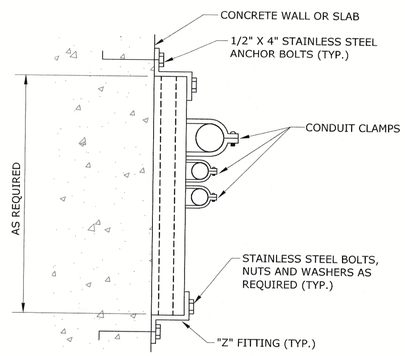

CONDUIT SUPPORT

1611114

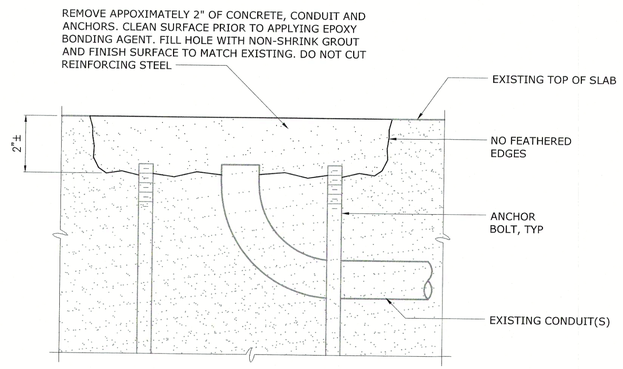

SEALING ABANDONED CONDUIT AND ANCHOR BOLTS

1611103

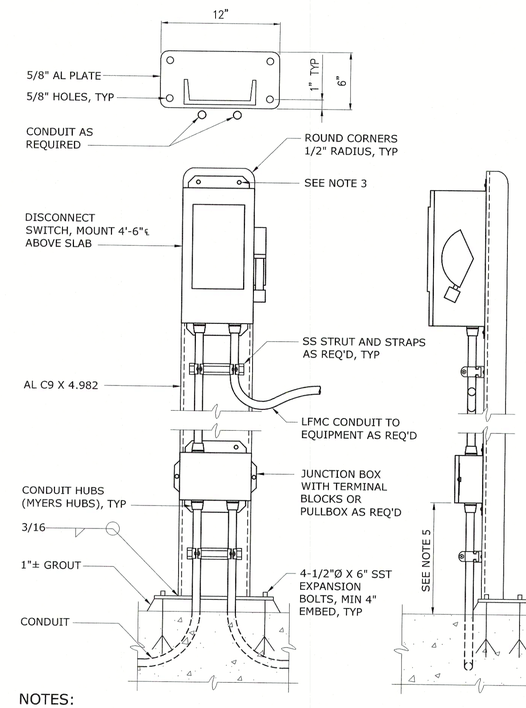

NOTES:

1. COAT ALUMINUM SURFACES IN CONTACT WITH CONCRETE PER SPECIFICATIONS.
2. SUPPLY 1'-2" DIAMETER X 2'-6" DEEP FOUNDATION WHERE MOUNTING SURFACE IS NOT AVAILABLE.
3. USE SST WASHERS, LOCKWASHERS, NUTS AND BOLTS FOR MOUNTING EQUIPMENT AND STRUT SUPPORTS TO CHANNEL. DRILL EQUIPMENT MOUNTING TABS AS NECESSARY TO COORDINATE WITH CHANNEL WIDTH.
4. REFERENCE STANDARD DETAIL 1611102 WHERE CONDUIT EMERGES FROM CONCRETE.
5. COORDINATE MOUNTING HEIGHT ABOVE CONCRETE WITH CLASSIFICATION REQUIREMENTS.

TYPICAL 30/60/100 AMP DISCONNECT SWITCH INSTALLATION DETAIL

1644001

REV	ISSUED FOR	DATE	BY
1	BID SET	10/19	GAB

PROJECT ENGINEER:	L.Z.M.
DESIGNED BY:	P. BOWLES
DRAWN BY:	T. RAHLAN
CHECKED BY:	B. PICKETT
IF THIS BAR DOES NOT MEASURE 1" THEN DRAWING IS NOT TO FULL SCALE	0 1/2" 1"

JOSEPH B. PICKETT LICENSE No. 74106 STATE OF FLORIDA PROFESSIONAL ENGINEER 10/23/19

J. BRAD PICKETT, PE NO. 74106

Hazen

HAZEN AND SAWYER
4000 HOLLYWOOD BOULEVARD, SUITE 750N
HOLLYWOOD, FLORIDA 33021
CERTIFICATE OF AUTHORIZATION NO. : 2771

CITY OF HALLANDALE BEACH

WATER TREATMENT PLANT
TRANSFER PUMP REPLACEMENT

Hallandale Beach
PROGRESS. INNOVATION. OPPORTUNITY

ELECTRICAL DETAILS
SHEET 2

DATE:	OCTOBER 2019
HAZEN NO.:	40621-001
CONTRACT NO.:	1
DRAWING NUMBER:	E-18

BID SET

File: C:\BMS\HAZEN-PW\DMS7787\E-18 Saved By: PBOWLES Save Date: 2018/12/19 3:05 PM
PLOT DATE: 2019/10/23 10:58:09 AM BY: TRAHLAN

INSTRUMENT AND FUNCTION SYMBOLS

LOCATION AND ACCESSIBILITY	SHARED DISPLAY/SHARED CONTROL: PRIMARY CHOICE OR BASIC PROCESS CONTROL SYSTEM	SHARED DISPLAY/SHARED CONTROL: ALTERNATE CHOICE OR SAFETY INSTRUMENTED SYSTEM	COMPUTER SYSTEMS AND SOFTWARE	DISCRETE
- LOCATED IN FIELD - NOT PANEL, CABINET, OR CONSOLE MOUNTED - VISIBLE AT FIELD LOCATION - NORMALLY OPERATOR ACCESSIBLE	ABCD 12345	ABCD 12345	ABCD 12345	ABCD 12345
- LOCATED IN OR ON FRONT OF CENTRAL OR MAIN PANEL OR CONSOLE - VISIBLE ON FRONT OF PANEL OR ON VIDEO DISPLAY - NORMALLY OPERATOR ACCESSIBLE AT PANEL FRONT OR CONSOLE	ABCD 12345	ABCD 12345	ABCD 12345	ABCD 12345
- LOCATED IN REAR OF CENTRAL OR MAIN PANEL - LOCATED IN CABINET BEHIND PANEL - NOT VISIBLE ON FRONT OF PANEL OR ON VIDEO DISPLAY - NOT NORMALLY OPERATOR ACCESSIBLE AT PANEL OR CONSOLE	ABCD 12345	ABCD 12345	ABCD 12345	ABCD 12345
- LOCATED IN OR ON FRONT OF SECONDARY OR LOCAL PANEL OR CONSOLE - VISIBLE ON FRONT OF PANEL OR ON VIDEO DISPLAY - NORMALLY OPERATOR ACCESSIBLE AT PANEL FRONT OR CONSOLE	ABCD 12345	ABCD 12345	ABCD 12345	ABCD 12345
- LOCATED IN REAR OF SECONDARY OR LOCAL PANEL - LOCATED IN FIELD CABINET - NOT NORMALLY OPERATOR ACCESSIBLE AT PANEL OR CONSOLE	ABCD 12345	ABCD 12345	ABCD 12345	ABCD 12345

X — SUFFIX (X) TO DIFFERENTIATE BETWEEN INSTRUMENTS AND FUNCTIONS THAT WOULD OTHERWISE HAVE THE SAME IDENTIFICATION.

SINGLE INSTRUMENT OR OTHER COMPONENT HAVING MULTIPLE FUNCTIONS OR SHARING A COMMON HOUSING

(ZZZ) — DESIGNATIONS OF CONTROL FUNCTIONS (ZZZ) ASSOCIATED WITH INSTRUMENT OR OTHER COMPONENTS.

AHC -	AUTO/HOLD/CLOSE	OC -	OPEN/CLOSE
AM -	AUTO/MANUAL	OSC -	OPEN/STOP/CLOSED
CALC -	CALCULATION	POT -	POTENTIOMETER
DEV -	DEVIATION	RL -	RAISE/LOWER
MOA -	MANUAL/OFF/AUTO	RS -	RUN/STOP
HOR -	HAND/OFF/REMOTE	RSL -	RAISE/STOP/LOWER
LOS -	LOCKOUT STOP	SD -	SHUTDOWN
LR -	LOCAL/REMOTE	SEL -	SELECT
LSR -	LOCAL/STOP/REMOTE	SP -	SET POINT
00 -	ON / OFF	SR -	START/RESET
		SS -	STOP/START

ABCD 12345 * — INSTRUMENT WITH COMPUTING OR CONVERTING FUNCTION

ABCD 12345 * — CONTROL SYSTEM COMPUTING FUNCTION

CONVERT

E - VOLTAGE	H - HYDRAULIC
I - CURRENT	O - ELECTROMAGNETIC, SONIC
P - PNEUMATIC	R - RESISTANCE (ELECT.)
A - ANALOG	D - DIGITAL
B - BINARY	

COMPUTE

*	SUMMING	P	PROPORTIONAL	Δ	DIFFERENCE
−	SUBTRACTOR	R	DERIVATIVE	>	HIGH SELECTING
X	MULTIPLYING	Σ/n	AVERAGING	<	LOW SELECTING
÷	DIVIDING	I:I	RATIO		INTEGRAL
n√	ROOT EXTRACTION	PID	PID	#	COMPLEX FUNCTION

= 1, 2, 3, etc.
REFER TO NOTE ON SAME SHEET FOR BRIEF DESCRIPTION

* — ELECTRICAL CONTROL INTERLOCK

\# — COMPLEX INTERLOCK
= 1, 2, 3, etc.
REFER TO NOTE ON SAME SHEET FOR BRIEF DESCRIPTION

AND — AND LOGIC

OR — OR LOGIC

ABCD 1234 — PILOT LIGHT

VALVE, GATE, AND ACTUATOR SYMBOLS

GATE VALVE
PLUG VALVE
GLOBE VALVE
BALL VALVE
BUTTERFLY VALVE
BALL CHECK VALVE
SWING CHECK VALVE
CHECK VALVE
3-WAY VALVE
3-WAY BALL VALVE
DIAPHRAGM VALVE
PINCH VALVE
NEEDLE VALVE
SLUICE GATE
STOP/SLIDE GATE
S — SOLENOID ACTUATOR
P — PNEUMATIC ACTUATOR

BACKFLOW PREVENTER
PRESSURE RELIEF VALVE
VACUUM RELIEF VALVE
COMBINATION VACUUM AND PRESSURE RELIEF VALVE
PRESSURE-REDUCING REGULATOR
BACKPRESSURE REGULATOR
V — AIR RELEASE VALVE
M — ROTARY MOTOR
E/H — ELECTROHYDRAULIC ACTUATOR
MANUAL ACTUATOR

PUMP AND EQUIPMENT SYMBOLS

CENTRIFUGAL WET PIT PUMP (OR DRY-PIT SUBMERSIBLE)
BLOWER (CENTRIFUGAL)
GEAR PUMP OR BLOWER (POSITIVE DISPLACEMENT)
CHOPPER PUMP
PISTON PUMP
DIAPHRAGM PUMP
ROTARY LOBE PUMP OR BLOWER (POSITIVE DISPLACEMENT)
METERING PUMP
COMPRESSOR
PROGRESSIVE CAVITY PUMP
VERTICAL PUMP
INLINE GRINDER
CENTRIFUGAL PUMP
SCREW CENTRIFUGAL PUMP
M — MIXER

MISCELLANEOUS SYMBOLS

QUICK CONNECT
BLIND FLANGE
FLEXIBLE HOSE
CALIBRATION CYLINDER
PULSATION DAMPENER
EXPANSION TANK
HORN
HORN/STROBE
RUPTURE DISK
V — VENT
DIAPHRAGM SEAL
FULL LINE OR TAPPED RING SEAL
D — DRAIN
XXXX-YYYY — EQUIPMENT OR PANEL TAG
M — MOTOR
FILTER
AIR FILTER
STATIC MIXER
INJECTOR

IDENTIFICATION LETTERS

	FIRST LETTERS: MEASURED OR INITIATING VARIABLE	FIRST LETTERS: VARIABLE MODIFIER	SUCCEEDING LETTERS: READOUT/ PASSIVE FUNCTION	SUCCEEDING LETTERS: OUTPUT/ ACTIVE FUNCTION	SUCCEEDING LETTERS: FUNCTION MODIFIER
A	ANALYSIS		ALARM		
B	BURNER, COMBUSTION		USER'S CHOICE	USER'S CHOICE	USER'S CHOICE
C	CONDUCTIVITY			CONTROL	CLOSE
D	DENSITY (MASS) OR SPECIFIC	DIFFERENCE, DIFFERENTIAL			DEVIATION
E	GRAVITY VOLTAGE (EMF)		SENSOR, PRIMARY ELEMENT		
F	FLOW, FLOW RATE	RATIO			
G	USER'S CHOICE		GLASS, GAUGE, VIEWING DEVICE		
H	HAND				HIGH
I	CURRENT		INDICATE		
J	POWER		SCAN		
K	TIME, SCHEDULE	TIME RATE OF CHANGE		CONTROL STATION	
L	LEVEL		LIGHT		LOW
M	MOISTURE OR HUMIDITY	MOMENTARY			MIDDLE, INTERMEDIATE
N	TORQUE		USER'S CHOICE	USER'S CHOICE	USER'S CHOICE
O	USER'S CHOICE		ORIFICE, RESTRICTION		OPEN
P	PRESSURE		POINT (TEST CONNECTION)		
Q	QUANTITY	INTEGRATE, TOTALIZE	INTEGRATE, TOTALIZE		
R	RADIATION		RECORD		RUN
S	SPEED, FREQUENCY	SAFETY		SWITCH	STOP
T	TEMPERATURE			TRANSMIT	
U	MULTIVARIABLE		MULTIFUNCTION	MULTIFUNCTION	
V	VIBRATION, MECHANICAL ANALYSIS			VALVE, DAMPER, LOUVER	
W	WEIGHT, FORCE		WELL PROBE		
X	UNCLASSIFIED	X-AXIS	ACCESSORY DEVICES, UNCLASSIFIED	UNCLASSIFIED	UNCLASSIFIED
Y	EVENT, STATE, PRESENCE	Y-AXIS		AUXILIARY DEVICES	
Z	POSITION, DIMENSION	Z-AXIS, SAFETY INSTRUMENTED SYSTEM		DRIVER, ACTUATOR, UNCLASSIFIED FINAL CONTROL ELEMENT	

PRIMARY ELEMENT SYMBOLS

M — MAGNETIC FLOW METER
SONIC FLOW METER
ΔT — THERMAL MASS FLOW METER
TURBINE OR PROPELLER FLOW METER
VENTURI FLOW METER
AVERAGING PITOT TUBE
VORTEX FLOW METER
POSITIVE DISPLACEMENT FLOW METER
PARSHALL FLUME
WEIR
ORIFICE PLATE
FICV — ROTAMETER WITH INTEGRAL VALVE
XX — XX:
RF=ADMITTANCE/CAPACITANCE
MAN=MANOMETER
ULTRASONIC LEVEL SENSOR
SUBMERSIBLE LEVEL SENSOR
NON-CONTACT RADAR LEVEL SENSOR
GUIDED WAVE RADAR LEVEL SENSOR
FLOAT LEVEL SWITCH
CAPACITANCE LEVEL SENSOR

ANALYTICAL ABBREVIATIONS

AXX 12345 (ZZZ) — ANALYSIS INSTRUMENT

(ZZZ) = ALK - ALKALINITY
CH4 - METHANE
CL2 - CHLORINE
COMB - COMBUSTIBLE GAS
CON - CONDUCTIVITY
DO - DISSOLVED OXYGEN
IR - INFRARED
H2S - HYDROGEN SULFIDE
LEL - LOWER EXPLOSIVE LIMIT
METH - METHANOL VAPOR
NH3 - AMMONIA
NO3 - NITRATE
O2 - OXYGEN
O3 - OZONE
ORP - OXIDATION/REDUCTION POTENTIAL
PETRO - PETROLEUM VAPOR
PH - HYDROGEN ION CONCENTRATION
PO4 - PHOSPHATE
SO2 - SULFUR DIOXIDE
TH - TOTAL HARDNESS
TSS - TOTAL SUSPENDED SOLIDS
TURB - TURBIDITY
UV - ULTRAVIOLET

GENERAL NOTES

1. SYMBOLS AND NOMENCLATURE ARE BASED ON ANSI/ISA-5.1-2009.
2. REFER TO LEGEND SHEETS OF OTHER DISCIPLINES FOR ADDITIONAL SYMBOLS AND ABBREVIATIONS.
3. REFER TO SPECIFICATIONS FOR ADDITIONAL DETAIL ON CONTROL SYSTEM FUNCTIONAL REQUIREMENTS.
4. INSTRUMENTS AND PANELS DENOTED WITH AN ASTERISK (*) ARE PROVIDED BY OTHER DISCIPLINES. REFER TO THE DRAWINGS AND SPECIFICATIONS OF OTHER DISCIPLINES FOR ADDITIONAL DETAIL.
5. POWER SUPPLIES FOR LOOPS OR SYSTEMS SHALL BE FURNISHED BY THE INSTRUMENTATION SUPPLIER TO MEET THE PARTICULAR CHARACTERISTICS (E.G., VOLTAGE AND CURRENT REQUIREMENTS) OF COMPONENTS IN EACH LOOP OR SYSTEM.

LINE SYMBOLS AND LEGEND

MAJOR PROCESS PIPES OR CHANNELS
SECONDARY PROCESS OR MECHANICAL CONNECTION
AIR SUPPLY OR SIGNAL
ELECTRICAL SIGNAL/ COPPER CABLE
DATA LINK OR INTERNAL SOFTWARE LINK
FO — FIBER OPTIC CABLE
C6 — CAT6 CABLE
PROCESS/SIGNALS NOT CONNECTED (CROSSING)
PROCESS/SIGNALS CONNECTED
TAG / DRAWING — OFF-SHEET CONNECTOR
DISCRETE ELECTRICAL SIGNALS
DISCRETE DIGITAL SIGNALS
ANALOG ELECTRICAL SIGNALS
ANALOG DIGITAL SIGNALS

REV	ISSUED FOR	DATE	BY
1	BID SET	10/29/19	KRD

PROJECT ENGINEER:	L.Z.M.
DESIGNED BY:	K.R.D.
DRAWN BY:	K.R.D.
CHECKED BY:	G.A.B.

IF THIS BAR DOES NOT MEASURE 1" THEN DRAWING IS NOT TO FULL SCALE — 0 1/2" 1"

KEITH R. DINNEN LICENSE No. 78757 STATE OF FLORIDA PROFESSIONAL ENGINEER
KEITH R. DINNEN 10/29/19
NO. 78757

Hazen
HAZEN AND SAWYER
4000 HOLLYWOOD BOULEVARD, SUITE 750N
HOLLYWOOD, FLORIDA 33021
CERTIFICATE OF AUTHORIZATION NO. : 2771

CITY OF HALLANDALE BEACH
WATER TREATMENT PLANT
TRANSFER PUMP REPLACEMENT

Hallandale Beach — PROGRESS. INNOVATION. OPPORTUNITY

INSTRUMENTATION SYMBOLS AND LEGEND

DATE: OCTOBER 2019
HAZEN NO.: 40621-001
CONTRACT NO.: 1
DRAWING NUMBER: I-01

BID SET

File: C:\PROJECT DRAWINGS\40621-001 HALLANDALE WTP TP REPLACEMENT\I-01 Saved By KDINNEN Save Date: 2019/10/29 12:20 PM
PLOT DATE: 2019/10/29 12:37:25 PM BY: KDINNEN

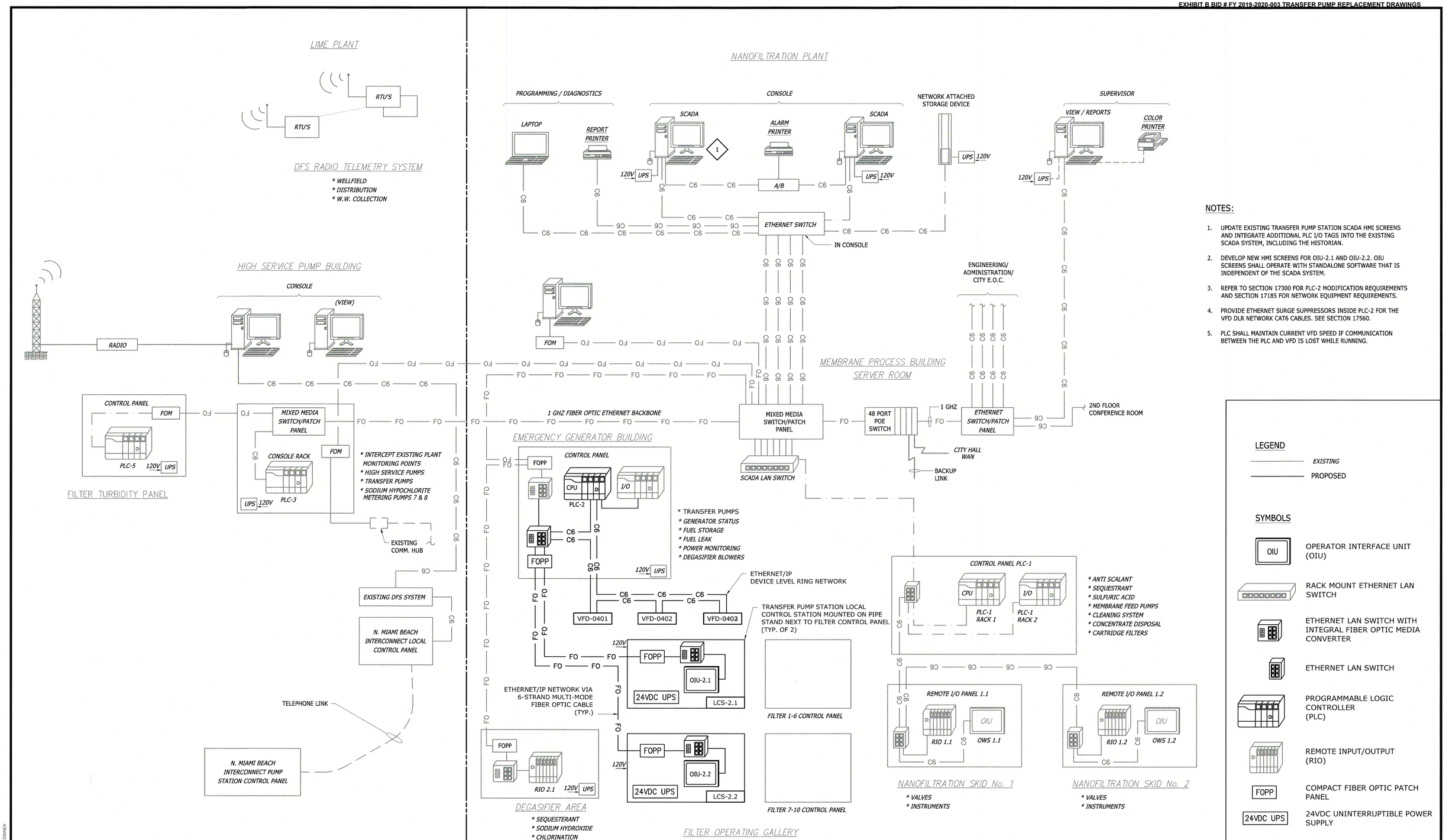

NOTES:

1. UPDATE EXISTING TRANSFER PUMP STATION SCADA HMI SCREENS AND INTEGRATE ADDITIONAL PLC I/O TAGS INTO THE EXISTING SCADA SYSTEM, INCLUDING THE HISTORIAN.
2. DEVELOP NEW HMI SCREENS FOR OIU-2.1 AND OIU-2.2. OIU SCREENS SHALL OPERATE WITH STANDALONE SOFTWARE THAT IS INDEPENDENT OF THE SCADA SYSTEM.
3. REFER TO SECTION 17300 FOR PLC-2 MODIFICATION REQUIREMENTS AND SECTION 17185 FOR NETWORK EQUIPMENT REQUIREMENTS.
4. PROVIDE ETHERNET SURGE SUPPRESSORS INSIDE PLC-2 FOR THE VFD DLR NETWORK CAT6 CABLES. SEE SECTION 17560.
5. PLC SHALL MAINTAIN CURRENT VFD SPEED IF COMMUNICATION BETWEEN THE PLC AND VFD IS LOST WHILE RUNNING.

LEGEND

EXISTING

PROPOSED

SYMBOLS

OIU — OPERATOR INTERFACE UNIT (OIU)

RACK MOUNT ETHERNET LAN SWITCH

ETHERNET LAN SWITCH WITH INTEGRAL FIBER OPTIC MEDIA CONVERTER

ETHERNET LAN SWITCH

PROGRAMMABLE LOGIC CONTROLLER (PLC)

REMOTE INPUT/OUTPUT (RIO)

FOPP — COMPACT FIBER OPTIC PATCH PANEL

24VDC UPS — 24VDC UNINTERRUPTIBLE POWER SUPPLY

REV	ISSUED FOR	DATE	BY
1	BID SET	10/29/19	KRD

PROJECT ENGINEER:	L.Z.M.
DESIGNED BY:	K.R.D.
DRAWN BY:	K.R.D.
CHECKED BY:	G.A.B.

IF THIS BAR DOES NOT MEASURE 1" THEN DRAWING IS NOT TO FULL SCALE (0 1/2" 1")

KEITH R. DINNEN LICENSE No. 78757 STATE OF FLORIDA PROFESSIONAL ENGINEER

KEITH R. DINNEN
NO. 78757
10/29/19

Hazen

HAZEN AND SAWYER
4000 HOLLYWOOD BOULEVARD, SUITE 750N
HOLLYWOOD, FLORIDA 33021
CERTIFICATE OF AUTHORIZATION NO. : 2771

CITY OF HALLANDALE BEACH

WATER TREATMENT PLANT
TRANSFER PUMP REPLACEMENT

Hallandale Beach — PROGRESS. INNOVATION. OPPORTUNITY.

SCADA NETWORK DIAGRAM

DATE:	OCTOBER 2019
HAZEN NO.:	40621-001
CONTRACT NO.:	1
DRAWING NUMBER:	I-02

BID SET

File: C:\PROJECT DRAWINGS\40621-001 HALLANDALE WTP TP REPLACEMENT\I-02 Saved By KDINNEN Save Date: 2019/10/29 12:20 PM
PLOT DATE: 2019/10/29 12:37:30 PM BY: KDINNEN

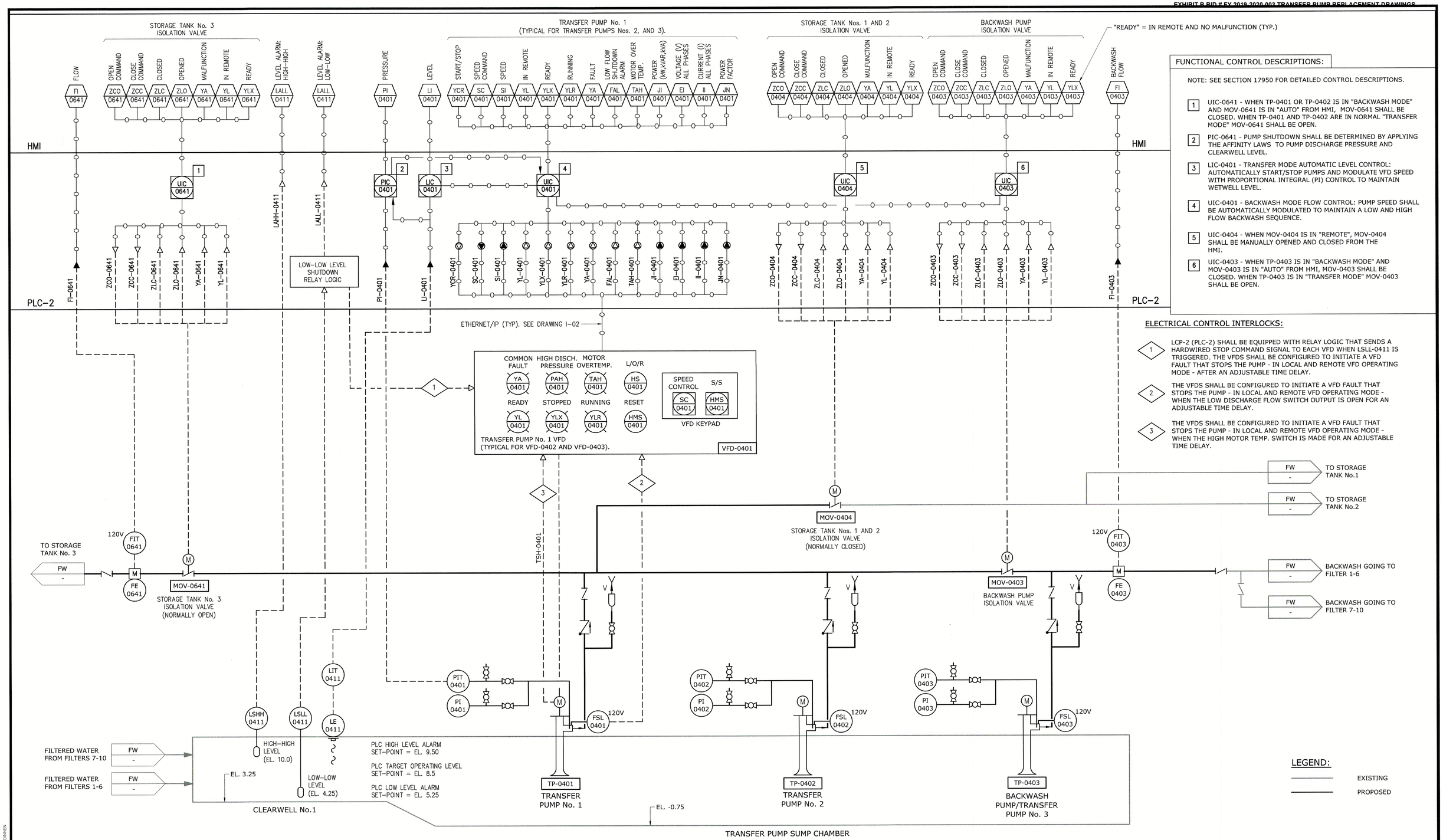

FUNCTIONAL CONTROL DESCRIPTIONS:

NOTE: SEE SECTION 17950 FOR DETAILED CONTROL DESCRIPTIONS.

1. UIC-0641 - WHEN TP-0401 OR TP-0402 IS IN "BACKWASH MODE" AND MOV-0641 IS IN "AUTO" FROM HMI, MOV-0641 SHALL BE CLOSED. WHEN TP-0401 AND TP-0402 ARE IN NORMAL "TRANSFER MODE" MOV-0641 SHALL BE OPEN.
2. PIC-0641 - PUMP SHUTDOWN SHALL BE DETERMINED BY APPLYING THE AFFINITY LAWS TO PUMP DISCHARGE PRESSURE AND CLEARWELL LEVEL.
3. LIC-0401 - TRANSFER MODE AUTOMATIC LEVEL CONTROL: AUTOMATICALLY START/STOP PUMPS AND MODULATE VFD SPEED WITH PROPORTIONAL INTEGRAL (PI) CONTROL TO MAINTAIN WETWELL LEVEL.
4. UIC-0401 - BACKWASH MODE FLOW CONTROL: PUMP SPEED SHALL BE AUTOMATICALLY MODULATED TO MAINTAIN A LOW AND HIGH FLOW BACKWASH SEQUENCE.
5. UIC-0404 - WHEN MOV-0404 IS IN "REMOTE", MOV-0404 SHALL BE MANUALLY OPENED AND CLOSED FROM THE HMI.
6. UIC-0403 - WHEN TP-0403 IS IN "BACKWASH MODE" AND MOV-0403 IS IN "AUTO" FROM HMI, MOV-0403 SHALL BE CLOSED. WHEN TP-0403 IS IN "TRANSFER MODE" MOV-0403 SHALL BE OPEN.

ELECTRICAL CONTROL INTERLOCKS:

1. LCP-2 (PLC-2) SHALL BE EQUIPPED WITH RELAY LOGIC THAT SENDS A HARDWIRED STOP COMMAND SIGNAL TO EACH VFD WHEN LSLL-0411 IS TRIGGERED. THE VFDS SHALL BE CONFIGURED TO INITIATE A VFD FAULT THAT STOPS THE PUMP - IN LOCAL AND REMOTE VFD OPERATING MODE - AFTER AN ADJUSTABLE TIME DELAY.
2. THE VFDS SHALL BE CONFIGURED TO INITIATE A VFD FAULT THAT STOPS THE PUMP - IN LOCAL AND REMOTE VFD OPERATING MODE - WHEN THE LOW DISCHARGE FLOW SWITCH OUTPUT IS OPEN FOR AN ADJUSTABLE TIME DELAY.
3. THE VFDS SHALL BE CONFIGURED TO INITIATE A VFD FAULT THAT STOPS THE PUMP - IN LOCAL AND REMOTE VFD OPERATING MODE - WHEN THE HIGH MOTOR TEMP. SWITCH IS MADE FOR AN ADJUSTABLE TIME DELAY.

REV	ISSUED FOR	DATE	BY
1	BID SET	10/29/19	KRD

PROJECT ENGINEER:	L.Z.M.
DESIGNED BY:	K.R.D.
DRAWN BY:	K.R.D.
CHECKED BY:	G.A.B.

IF THIS BAR DOES NOT MEASURE 1" THEN DRAWING IS NOT TO FULL SCALE (0 1/2" 1")

KEITH R. DINNEN NO. 78757 — KEITH R. DINNEN LICENSE No. 78757 STATE OF FLORIDA PROFESSIONAL ENGINEER — 10/29/19

Hazen
HAZEN AND SAWYER
4000 HOLLYWOOD BOULEVARD, SUITE 750N
HOLLYWOOD, FLORIDA 33021
CERTIFICATE OF AUTHORIZATION NO. : 2771

CITY OF HALLANDALE BEACH

WATER TREATMENT PLANT
TRANSFER PUMP REPLACEMENT

Hallandale Beach — PROSPERITY. INNOVATION. OPPORTUNITY

TRANSFER PUMP STATION P&ID

DATE: OCTOBER 2019
HAZEN NO.: 40621-001
CONTRACT NO.: 1
DRAWING NUMBER: I-03

BID SET

File: C:\PROJECT DRAWINGS\40621-001 HALLANDALE WTP TP REPLACEMENT\I-03 Saved By KDINNEN Save Date: 2019/10/29 12:20 PM
PLOT DATE: 2019/10/29 12:37:35 PM BY: KDINNEN

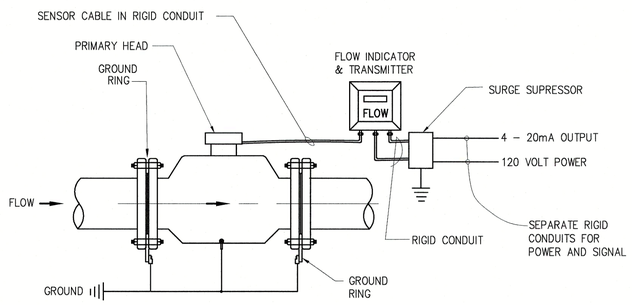

NOTE:
STRAIGHT INLET RUN MINIMUM OF 5x DIAMETER AND OUTLET RUN MINIMUM OF 2x DIAMETER
FOLLOW MANUFACTURER'S INSTALLAION INSTRUCTIONS

MAGNETIC FLOW METER

DETAIL — N.T.S. — STD –

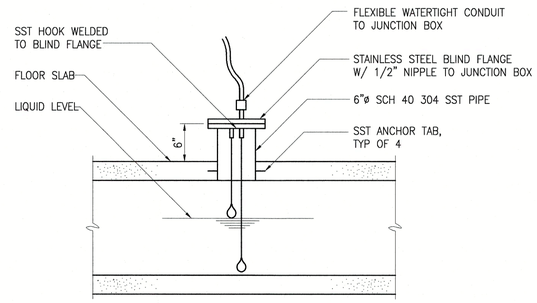

HIGH–HIGH AND LOW–LOW LEVEL FLOAT SWITCH MOUNTING DETAIL

DETAIL — N.T.S. — STD –

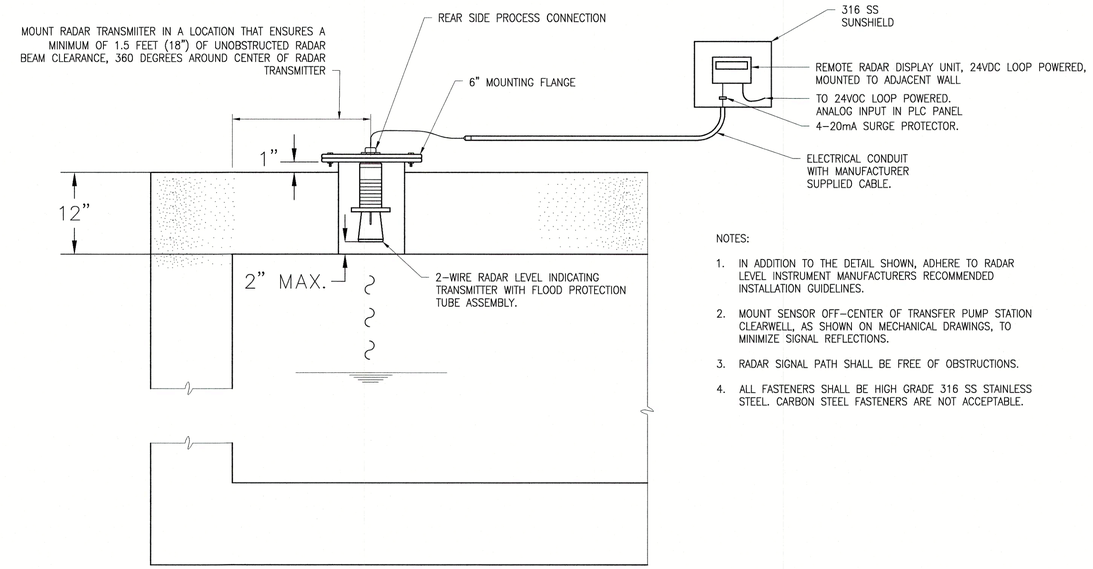

NOTES:

1. IN ADDITION TO THE DETAIL SHOWN, ADHERE TO RADAR LEVEL INSTRUMENT MANUFACTURERS RECOMMENDED INSTALLATION GUIDELINES.
2. MOUNT SENSOR OFF–CENTER OF TRANSFER PUMP STATION CLEARWELL, AS SHOWN ON MECHANICAL DRAWINGS, TO MINIMIZE SIGNAL REFLECTIONS.
3. RADAR SIGNAL PATH SHALL BE FREE OF OBSTRUCTIONS.
4. ALL FASTENERS SHALL BE HIGH GRADE 316 SS STAINLESS STEEL. CARBON STEEL FASTENERS ARE NOT ACCEPTABLE.

WETWELL MOUNTING FOR RADAR LEVEL INDICATING TRANSMITTER

DETAIL — N.T.S. — STD –

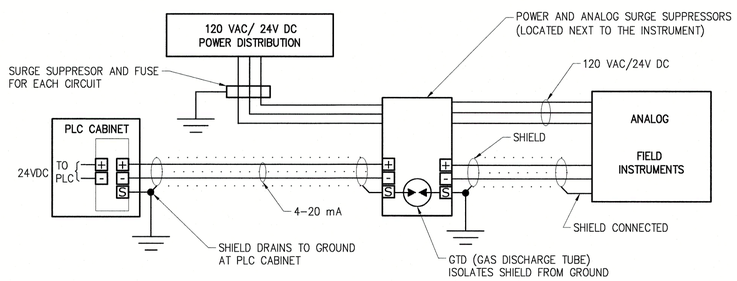

4–WIRE FIELD TRANSMITTERS (AC AND DC)

DETAIL — N.T.S. — STD –

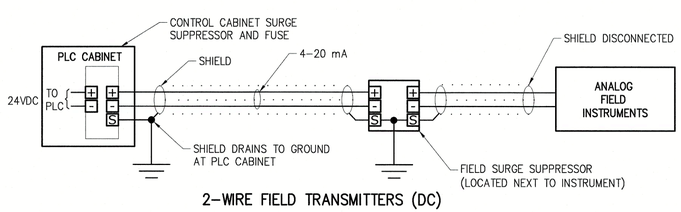

2–WIRE FIELD TRANSMITTERS (DC)

DETAIL — N.T.S. — STD –

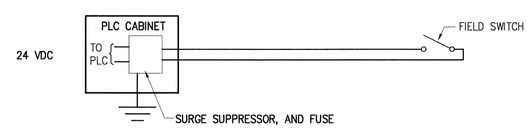

DISCRETE PLC/INPUT CIRCUIT

DETAIL — N.T.S. — STD –

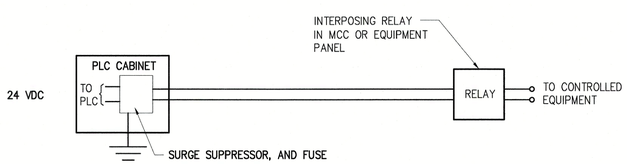

DISCRETE PLC/OUTPUT CIRCUIT

DETAIL — N.T.S. — STD –

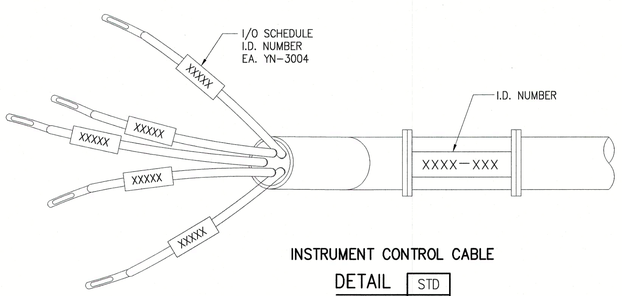

INSTRUMENT CONTROL CABLE

DETAIL — N.T.S. — STD –

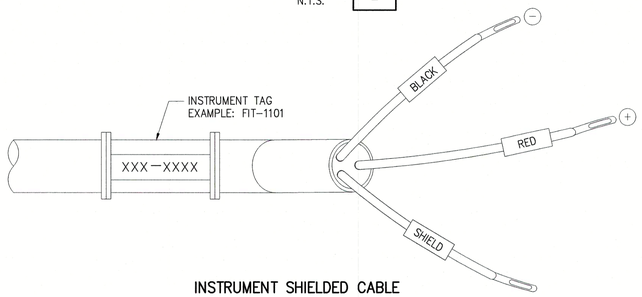

INSTRUMENT SHIELDED CABLE

DETAIL — N.T.S. — STD –

REV	ISSUED FOR	DATE	BY
1	BID SET	10/29/19	KRD

PROJECT ENGINEER:	L.Z.M.
DESIGNED BY:	K.R.D.
DRAWN BY:	K.R.D.
CHECKED BY:	G.A.B.
IF THIS BAR DOES NOT MEASURE 1" THEN DRAWING IS NOT TO FULL SCALE	0 1/2" 1"

KEITH R. DINNEN LICENSE No. 78757 STATE OF FLORIDA PROFESSIONAL ENGINEER

KEITH R. DINNEN
NO. 78757
10/29/19

Hazen

HAZEN AND SAWYER
4000 HOLLYWOOD BOULEVARD, SUITE 750N
HOLLYWOOD, FLORIDA 33021
CERTIFICATE OF AUTHORIZATION NO. : 2771

CITY OF HALLANDALE BEACH

WATER TREATMENT PLANT
TRANSFER PUMP REPLACEMENT

Hallandale Beach
PROGRESS. INNOVATION. OPPORTUNITY.

INSTRUMENTATION DETAILS I

DATE:	OCTOBER 2019
HAZEN NO.:	40621-001
CONTRACT NO.:	1
DRAWING NUMBER:	I-04

BID SET

File: C:\PROJECT DRAWINGS\40621-001 HALLANDALE WTP TP REPLACEMENT\I-04 Saved By: KDINNEN Save Date: 2019/10/29 12:20 PM
PLOT DATE: 2019/10/29 12:37:40 PM BY: KDINNEN

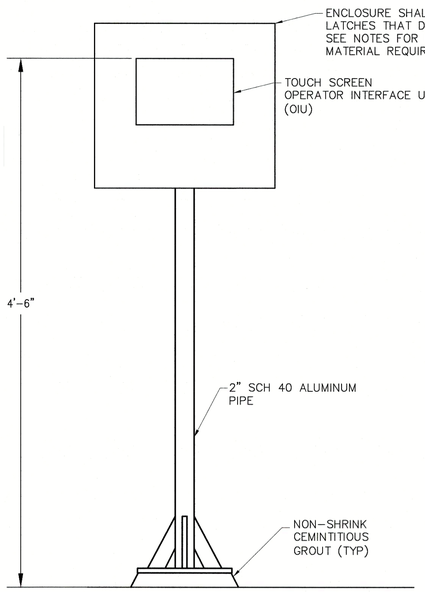

4-WIRE TRANSMITTER

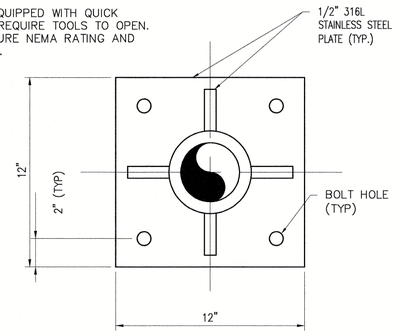

PLAN

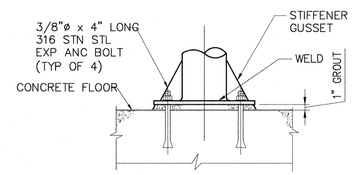

DETAIL

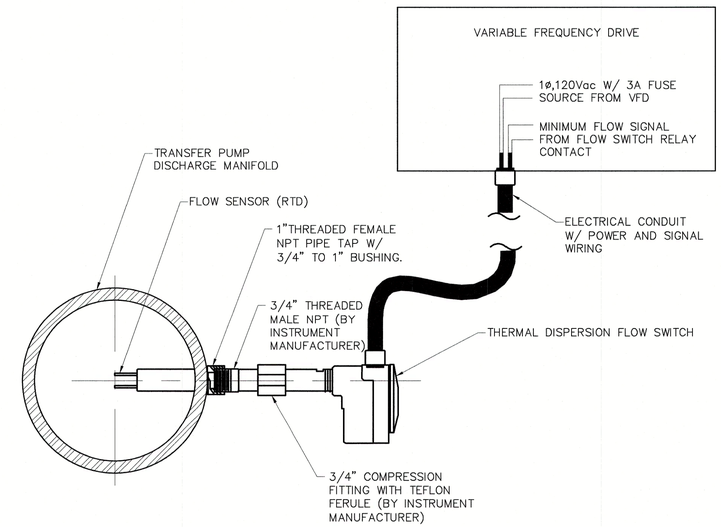

NOTES:

1. ENCLOSURE SHALL BE FURNISHED WITH ALL HARDWARE REQUIRED FOR A WORKING OIU SYSTEM. AT A MINIMUM THE HARDWARE SHALL INCLUDE POWER SUPPLIES, PATCH PANELS, FIBER-TO-COPPER CONVERTERS, TERMINAL BLOCKS, OVER CURRENT PROTECTION DEVICES AND UPS UNITS.
2. ENCLOSURE FOR OIU-2.1 AND OIU-2.2 SHALL BE NEMA 4X 316 STAINLESS STEEL.
3. STEEL FLOOR PLATE FOR OIU-2.2 PIPE STAND SHALL BE FASTENDED TO THE EXISTING METAL FLOOR GRATING WITH 316 STAINLESS STEEL BOLTS AND AN ADDITIONAL 1/2" THICK 12" x 12" STAINLESS STEEL PLATE ON THE UNDERSIDE OF THE EXISTING GRATING.

PIPE STAND MOUNT FOR OIU-2.1 AND OIU-2.2

DETAIL	STD
N.T.S.	-

NOTES:

1. ADHERE TO MANUFACTURER INSTALLATION GUIDE FOR PROPER SENSOR ORIENTATION.
2. DO NOT MOUNT THE SENSOR ON THE TOP OF THE PIPE. MOUNT ON THE SIDE OF THE PIPE AS SHOWN.
3. REFER TO SECTION 17711 FOR ADDITIONAL REQUIREMENTS.
4. REFER TO MECHANICAL DRAWINGS FOR INSTRUMENT LOCATION.

THERMAL DISPERSION FLOW SWITCH

DETAIL	STD
N.T.S.	-

REV	ISSUED FOR	DATE	BY
1	BID SET	10/29/19	KRD

PROJECT ENGINEER:	L.Z.M.
DESIGNED BY:	K.R.D.
DRAWN BY:	K.R.D.
CHECKED BY:	G.A.B.
IF THIS BAR DOES NOT MEASURE 1" THEN DRAWING IS NOT TO FULL SCALE	0 1/2" 1"

KEITH R. DINNEN LICENSE No. 78757 STATE OF FLORIDA PROFESSIONAL ENGINEER

KEITH R. DINNEN 10/29/19
NO. 78757

Hazen

HAZEN AND SAWYER
4000 HOLLYWOOD BOULEVARD, SUITE 750N
HOLLYWOOD, FLORIDA 33021
CERTIFICATE OF AUTHORIZATION NO. : 2771

CITY OF HALLANDALE BEACH

WATER TREATMENT PLANT
TRANSFER PUMP REPLACEMENT

Hallandale Beach
PROSPERITY, INNOVATION, OPPORTUNITY

INSTRUMENTATION DETAILS II

DATE:	OCTOBER 2019
HAZEN NO.:	40621-001
CONTRACT NO.:	1
DRAWING NUMBER:	I-05

BID SET

File: C:\PROJECT DRAWINGS\40621-001 HALLANDALE WTP TP REPLACEMENT\-05 Saved By: KDINNEN Save Date: 2019/10/29 12:20 PM
PLOT DATE: 2019/10/29 12:37:44 PM BY: KDINNEN