12" WATER MAIN INSTALLATION ALONG FOSTER ROAD

CITY OF HALLANDALE BEACH, BROWARD COUNTY, FLORIDA

INDEX OF SHEETS

G-00	COVER
G-01	KEY PLAN
G-02	ABBREVIATIONS
G-03	GENERAL NOTES & LEGEND
G-04	FIRE HYDRANT SPACING
G-05	BROWARD COUNTY STANDARDS DETAILS 01
G-06	BROWARD COUNTY STANDARDS DETAILS 02
G-07	CIVIL DETAILS
G-08	EXISTING WATER METERS
C-01	PLAN & PROFILE (STA: 10+00 TO 14+60)
C-02	PLAN & PROFILE (STA: 14+60 TO 19+60)
C-03	PLAN & PROFILE (STA: 19+60 TO 24+60)
C-04	PLAN & PROFILE (STA: 24+60 TO 29+60)
C-05	PLAN & PROFILE (STA: 29+60 TO 34+60)
C-06	PLAN & PROFILE (STA: 34+60 TO 39+60)
C-07	PLAN & PROFILE (STA: 39+60 TO 43+04)
C-08	PLAN & PROFILE (STA: 59+00 TO 63+60)
C-09	PLAN & PROFILE (STA: 63+60 TO 66+00)
C-10	PLAN & PROFILE (STA: 48+60 TO 53+20)
C-11	PLAN & PROFILE (STA: 70+00 TO 71+40)
C-12	PLAN & PROFILE (STA: 80+00 TO 81+80)
C-13	PLAN & PROFILE (STA: 90+00 TO 92+00)
C-14	PLAN & PROFILE (STA: 100+00 TO 102+00)
C-15	WATER CONNECTION SECTIONS
C-16	FIRE HYDRANT SECTIONS
C-17	PAVEMENT RESTORATION
C-18	PAVEMENT RESTORATION
C-19	PAVEMENT RESTORATION
C-20	WATER SERVICE SCHEDULE
C-21	UTILITIES CONFLICT TABLE
C-22	NOTES FOR TRAFFIC CONTROL PLAN
C-23	PAVEMENT MARKING (STA: 10+00 TO 19+60)
C-24	PAVEMENT MARKING (STA: 19+60 TO 29+60)
C-25	PAVEMENT MARKING (STA: 29+60 TO 39+60)
C-26	PAVEMENT MARKING
C-27	PAVEMENT MARKING NOTES AND DETAILS
C-28	PAVEMENT MARKING NOTES AND DETAILS 2

PROJECT LOCATION

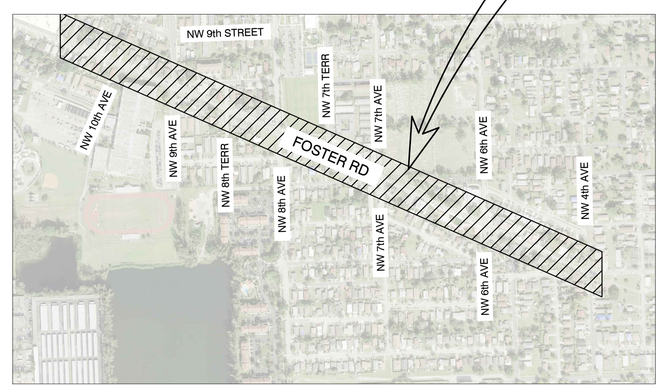

LOCATION MAP

PORTION OF SEC. 21, TWP. 51S, RGE. 42E
SCALE 1:500

Hallandale Beach
PROGRESS. INNOVATION. OPPORTUNITY.

CITY OF HALLANDALE BEACH

MAYOR	JOY COPPER
VICE MAYOR	SABRINA JAVELLANA
COMMISSIONER	MIKE BUTLER
COMMISSIONER	ANABELLE LIMA-TAUB
COMMISSIONER	MICHELE LAZAROW
CITY MANAGER	GREG CHAVARRIA
PUBLIC WORKS	JAMES SYLVAIN

Stantec
901 Ponce de Leon Blvd. Suite 900
Coral Gables, Florida 33134
Voice: 305.445.2900 Fax: 305.445.3344
www.stantec.com
Certificate of Authorization # 27013

NOTES:

1. THESE PLANS ARE VALID WITH APPROVED PERMITS BY THE REGULATORY AGENCIES HAVING JURISDICTION OVER THE PROJECT LOCATION. ANY USE WITHOUT THE REQUIRED PERMITS IS THE RESPONSIBILITY OF THE USER.

2. REFERENCE DATUM FOR ALL THE ELEVATIONS SHOWN ON THE PLANS ARE NAVD88

PERMITTING AGENCIES	DATE SUBMITTED	EOR INITIALS	DATE APPROVED	
CITY OF HALLANDALE BEACH ENGINEERING DEPARTMENT	11/05/2019	DC	11/05/2019	
BROWARD COUNTY TRAFFIC ENGINEERING DIVISION	11/05/2019	DC	02/27/2020	#1910106060
FLORIDA DEPARTMENT OF ENVIRONMENTAL PROTECTION	11/05/2019	DC	11/15/2019	

BID SET

NOTE: THE SCALE OF THESE PLANS MAY HAVE CHANGED DUE TO REPRODUCTION

THIS DOCUMENT HAS BEEN DIGITALLY SIGNED AND SEALED BY:

DAVE E. CLARKE LICENSE No 66553 STATE OF FLORIDA PROFESSIONAL ENGINEER

Dave E Clarke
Digitally signed by Dave E Clarke
Date: 2020.02.27 14:57:16 -05'00'

DAVE CLARKE, P.E.
State of Florida - License No. 66553
901 Ponce de Leon Blvd ste 900
(305) 445-2900

PRINTED COPIES OF THIS DOCUMENT ARE NOT CONSIDERED SIGNED AND SEALED. THE SIGNATURE MUST BE VERIFIED ON THE ELECTRONIC DOCUMENTS.

Y:\177311\active\177311197\drawings\civil\177311197_cover.dwg
2020/02/27 2:35:55 PM by: Frank, Lisa

Revision	By	Appd.	YY.MM.DD

Issued	By	Appd.	YY.MM.DD

Seal

DAVE CLARKE, P.E.
State of Florida - License No. 66553

Consultants

Stantec
901 Ponce de Leon Blvd. Suite 900
Coral Gables, Florida 33134
www.stantec.com

The Contractor shall verify and be responsible for all dimensions. DO NOT scale the drawing - any errors or omissions shall be reported to Stantec without delay.
The Copyrights to all designs and drawings are the property of Stantec. Reproduction or use for any purpose other than that authorized by Stantec is forbidden.

CITY OF HALLANDALE BEACH
12" WATER MAIN ALONG FOSTER RD
CITY OF HALLANDALE BEACH, FLORIDA

File Name:	ER	DC	LF	19.07.31
	Dwn.	Chkd.	Dsgn.	YY.MM.DD

KEY PLAN

Project No.	Scale	
177311197	AS NOTED	
Drawing No.	Sheet	Revision
	G-01	

X:\177311197\drawings\civil\177311197_key Plan.dwg
2020/02/07 4:27 PM By: Robaina, Eduardo

A	AIR / AMPERE
ARV	AIR RELEASE VALVE
AASHTO	AMERICAN ASSOCIATION OF STATE HIGHWAY AND TRANSPORTATION OFFICIALS
AB	ANCHOR BOLT
ABAN	ABANDON
ABND	ABANDONED
ABBR	ABBREVIATION
AC	ASPHALTIC CONCRETE
ACI	AMERICAN CONCRETE INTERNATIONAL
ACP	ASBESTOS CEMENT PIPE
ALT	ALTERNATE
ALUM	ALUMINUM / ALUM
ANSI	AMERICAN NATIONAL STANDARDS INSTITUTE
APPD	APPROVED
APPROX	APPROXIMATE
APPURTS	APPURTENANCES
ASME	AMERICAN SOCIETY OF MECHANICAL ENGINEERS
ASPH	ASPHALT
ASTM	AMERICAN SOCIETY FOR TESTING AND MATERIALS
ATM	ATMOSPHERE
AV/AR	AIR VACUUM AND AIR RELEASE VALVE
AWPA	AMERICAN WOOD PRESERVERS ASSOCIATION
AWS	AMERICAN WELDING SOCIETY
AWWA	AMERICAN WATER WORKS ASSOCIATION
B/W	BACK OF WALL
BC	BEGIN CURVE / BETWEEN CENTERS / BACK OF CURVE
BCR	BEGIN CURB RETURN
BD	BOUNDARY
BE	BURIED ELECTRIC
BFP	BACK FLOW PREVENTER
BFV	BUTTERFLY VALVE
BFO	BURIED FIBER OPTIC
BLVD	BOULEVARD
BM	BENCH MARK
BO	BLOW-OFF ASSEMBLY
BOP	BOTTOM OF PIPE
BOT	BOTTOM
BPV	BACK PRESSURE VALVE
BT	BURIED TELEPHONE
BTV	BURIED TELEVISION
BV	BALL VALVE
C&G	CURB AND GUTTER
CATV	CABLE TELEVISION
C.B.	CATCH BASIN
CC	CENTER TO CENTER
CEM	CEMENT
CF	CURB FACE / CUBIC FOOT
CFH	CUBIC FEET PER HOUR
CFM	CUBIC FEET PER MINUTE
CFS	CUBIC FEET PER SECOND
CHG	CHANGE
CHKD	CHECKERED
CI	CAST IRON
CIP	CAST IRON PIPE / CAST IN PLACE
CIPP	CAST IN PLACE PIPE
CJ	CONSTRUCTION JOINT
CL	CENTERLINE
CLF	CHAIN LINK FENCE
CLR	CLEAR / CLEARANCE
CMC	CEMENT MORTAR-COATED
CML	CEMENT MORTAR-LINED
CML&C	CEMENT MORTAR-LINED AND COATED
CMP	CORRUGATED METAL PIPE
CMU	CONCRETE MASONRY UNIT
CO	CLEANOUT
COL	COLUMN
CONC	CONCRETE / CONCENTRIC
CONN	CONNECTION
CONST	CONSTRUCT / CONSTRUCTION
CONT	CONTINUED / CONTINUOUS
CONTR	CONTRACTOR
COORD	COORDINATE
COR	CORNER
COTG	CLEANOUT TO GRADE
CPVC	CHLORINATED POLYVINYL CHLORIDE
CSP	CORRUGATED STEEL PIPE
CTR	CENTER
CU	COPPER / CUBIC
CULV	CULVERT
CV	CHECK VALVE
CY	CUBIC YARD
CYL	CYLINDER
DB	DIRECT BURY
DBL	DOUBLE
DEG	DEGREE
DET	DETAIL
DIP	DUCTILE IRON

DIA	DIAMETER
DIAG	DIAGONAL
DIAPH	DIAPHRAGM
DIFF	DIFFUSER / DIFFERENTIAL
DIP	DUCTILE IRON PIPE
DIR	DIRECTION
DISCH	DISCHARGE
DL	DISPENSER
DMH	DROP MANHOLE
DO	DOWN
DR	DOOR / DRAIN
DWG	DRAWING
DWLS	DOWELS
DWY	DRIVEWAY
E	EAST
E/O	EAST OF
EA	EACH
EB	EXPANSION BOLT OR ANCHOR
EC	END CURVE
ECC	ECCENTRIC
ECR	END CURB RETURN
EFF	EFFLUENT
EG	EXISTING GRADE / EDGE OF GUTTER
EGL	ENERGY GRADE LINE
EL	ELEVATION
ELEC	ELECTRICAL / ELECTRONIC
ENCL	ENCLOSURE
ENG	ENGINE
ENGR	ENGINEER
ENT	ENTRANCE
EP	EDGE OF PAVEMENT
EPT	ETHYLENE PROPYLENE
EQ	EQUAL
EQUIP	EQUIPMENT
ESMT	EASEMENT
ETC	ET CETERA
EVC	END VERTICAL CURVE
EW	EACH WAY
EX.	EXISTING
EXC.	EXCAVATION
EXIST.	EXISTING
EXP.	EXPANSION
EXT.	EXTERIOR / EXTENSION
EXTR	EXTRUDED
F	FINISH
F TO F	FACE TO FACE
F&C	FRAME AND COVER
F&I	FURNISH AND INSTALL
FAB	FABRICATED
FB	FLAT BAR / FLOOR BEAM / FIELD BOOK
FCO	FLOOR CLEANOUT
FD	FLOOR DRAIN
FDR	FEEDER
FE	FINAL EFFLUENT
FEM	FEMALE (PIPE THREAD)
FF	FINISHED FLOOR
FG	FINISHED GRADE
FH	FIRE HYDRANT / FLAT HEAD
FIG	FIGURE
FIN	FINISHED
FIX	FIXTURE
FL	FLOWLINE
FLEX	FLEXIBLE
FLG	FLANGE / FLOORING
FLGD	FLANGED
FLR	FLOOR
FLSG	FLASHING
FM	FORCE MAIN
FMH	FLEXIBLE METAL HOSE
FN	FIELD NAILING
FND	FOUNDATION
FOC	FIBER OPTIC CABLE
FOS	FACE OF STUDS
FOW	FACE OF WALL
FPC	FLEXIBLE PIPE COUPLING
FPM	FEET PER MINUTE
FPS	FEET PER SECOND
FR	FRAME
FRP	FINISHED SURFACE
FS	FORGED STEEL
FT	FEET / FOOT
FTG	FOOTING
FUR	FURRING
FUT	FUTURE
FVO	FLUSHING VALVE OUTLET
FWD	FORWARD

G	GAS
GA	GAGE / GAUGE
GAL	GALLON
GALV	GALVANIZED
GANC	GUY ANCHOR
GB	GRADE BREAK
GEN	GENERAL
GFA	GROOVED FLANGE ADAPTER
GI	GALVANIZED IRON
GIP	GALVANIZED IRON PIPE
GL	GRADE LINE
GLV	GLOBE VALVE
GP	GUY POLE
GPD	GALLONS PER DAY
GPH	GALLONS PER HOUR
GPM	GALLONS PER MINUTE
GR	GRADE
GRD	GRADE / GROUND
GRTG	GRATING
GSP	GALVANIZED STEEL PIPE
GV	GATE VALVE
GYP	GYPSUM
H	HIGH/HEIGHT
H/B	HOSE BIBB
HC	HOUSE CONNECTION
HDR	HEADER
HDW	HARDWARE
HDWL	HEADWALL
HGL	HYDRAULIC GRADE LINE
HGR	HANGER
HM	HOLLOW METAL
HORZ	HORIZONTAL
HP	HIGH POINT
HPG	HIGH PRESSURE GAS
HV	HORIZONTAL AND VERTICAL CONTROL POINT
HWL	HIGH WATER LEVEL
HWO	HANDWHEEL OPERATED
HYD	HYDRAULIC / HYDRANT
I/O	INSIDE AND OUTSIDE
IBC	INTERNATIONAL BUILDING CODE
ID	INSIDE DIAMETER
IN	INCH
INCL	INCLUDE / INCLUDING
INFL	INFLUENT
INSL	INSULATION / INSULATING / INSULATED
INSP	INSPECTION
INST	INSTRUMENT
INT	INTERIOR
INV	INVERT
IP	IRON PIPE
IPS	IRON PIPE SIZE
IRRG	IRRIGATION
JANJC	JUNCTION CHAMBER
JCT	JUNCTION
JS	JUNCTION STRUCTURE
JT	JOINT
L	LENGTH
LAM	LAMINATED
LAT	LATERAL
LD	LOCAL DEPRESSION
LDG	LANDING
LEV	LEVEL
LF	LINEAR FOOT
LG	LENGTH / LONG
LL	LIVE LOAD
LLH	LONG LEG HORIZONTAL
LLV	LONG LEG VERTICAL
LOC	LOCATION
LOL	LAYOUT LINE
LONG	LONGITUDINAL
LP	LOW POINT / LOW PRESSURE
LT	LEFT / LIGHT
LW	LOW WATER
LWL	LOW WATER LEVEL
LWR	LOWER
M	METER
MACH	MACHINE
MAG	MAGNETIC
MAINT	MAINTENANCE
MAN	MANUAL
MAS	MASONRY
MAT	MATERIAL
MAX	MAXIMUM
MCR	MIDDLE OF CURB RETURN
MEAS	MEASURE
MECH	MECHANICAL
MED	MEDIUM
MEMB	MEMBER

MFR	MANUFACTURER
MFRD	MANUFACTURED
MGD	MILLION GALLONS PER DAY
MH	MANHOLE / MAINTENANCE HOLE
MHT	MEAN HIGH TIDE
MHW	MEAN HIGH WATER
MI	MALLEABLE IRON / MILE
MIN	MINIMUM
MISC	MISCELLANEOUS
M.J.	MECHANICAL JOINT
MK	MARK
MLW	MEAN LOW WATER
mm	MILLIMETER
MSL	MEAN SEA LEVEL
MTC	MECHANICAL-TYPE COUPLING
MTD	MOUNTED
MTG	MOUNTING
MTL	METAL
MTR	MOTOR
N	NORTH
NC	NORMALLY CLOSED
NF	NEAR FACE
NFPA	NATIONAL FIRE PROTECTION ASSOCIATION
NG	NATURAL GRADE / NATURAL GAS
NIC	NOT IN CONTRACT
NO	NUMBER / NORMALLY OPEN
NOM	NOMINAL
NPS	NOMINAL PIPE SIZE
NPT	NATIONAL PIPE THREAD
NRCP	NON-REINFORCED CONCRETE PIPE
NRS	NON-RISING STEM
NS	NEAR SIDE
NTS	NOT TO SCALE
OBJ	OBJECT
OC	ON CENTER
OD	OUTSIDE DIAMETER
OE	OUTER EDGE
OF	OUTSIDE FACE
OFD	OVERFLOW DRAIN
OH	OVER HEAD
OHW	OVERHEAD WIRES
OPNG	OPENING
OPP	OPPOSITE
ORIG	ORIGINAL
OSHA	OCCUPATIONAL SAFETY AND HEALTH ADMINISTRATION
O/S	OFFSET
OT	OVERHEAD TELEPHONE
OTV	OVERHEAD TELEVISION
P	POLE / PIPE
PAVMT	PAVEMENT
PB	PULL BOX
PC	POINT OF CURVATURE
PCC	PORTLAND CEMENT CONCRETE
PCOTG	PRESSURE CLEANOUT TO GRADE
PE	POLYEHTYLENE
PG	PRESSURE GAGE
PI	PLANT INFLUENT / POINT OF INTERSECTION
PK	PARKING
PL	PLATE / PROPERTY LINE / PLACE
PLAS	PLASTER / PLASTIC
PLT	PLANT
PM	PRESSED METAL
PNL	PANEL
POB	POINT OF BEGINNING
POC	POINT OF CONNECTION
POT	POINT OF TANGENT
PP	POWER POLE
PPD	POUNDS PER DAY
PPH	POUNDS PER HOUR
PPM	POUNDS PER MINUTE
PRCT	PRECAST
PRESS	PRESSURE
PROF	PROFILE
PROP.	PROPOSED
PRV	PRESSURE REGULATING, RELIEF OR REDUCING VALVE
PRVC	POINT OF REVERSE VERTICAL CURVE
PSF	POUNDS PER SQUARE FOOT
PSI	POUNDS PER SQUARE INCH
PSIA	POUNDS PER SQUARE INCH ABSOLUTE
PSIG	POUNDS PER SQUARE INCH GAUGE
PT	POINT OF TANGENCY / PAINT / PRESSURE
PV	PLUG VALVE
PVC	POLYVINYL CHLORIDE
PW	POTABLE WATER
QTY	QUANTITY
QUAD	QUADRANGLE / QUADRANT

R	RADIUS / RISER / RATE OF SLOPE
R/W	RIGHT OF WAY
RAC	RECYCLED ASPHALT CONCRETE
RAP	RECLAIMED ASPHALT PAVEMENT
RAS	RETURN ACTIVATED SLUDGE
RC	REINFORCED CONCRETE
RCP	REINFORCED CONCRETE PIPE
RD	ROAD / ROOF DRAIN / ROUND
RED	REDUCER / REDUCING
REF	REFERENCE / REFER / REFRIGERATOR
REINF	REINFORCE / REINFORCED
REQD	REQUIRED
RESIL	RESILIENT
REST.	RESTRAINED
RET	RETAINING / RETURN
REV	REVISION
REW	RECLAIMED WATER
RGE	REGISTERED GEOTECHNICAL ENGINEER
RO	ROUGH OPENING
RPM	REVOLUTIONS PER MINUTE
RR	RAILROAD
RT	RIGHT
S	SOUTH / SCUM / SINK / SECOND / SLOPE /
S/O	SOUTH OF
SA	SAMPLE
SAN.	SANITARY SEWER
SCCP	STEEL CYLINDER CONCRETE PIPE
SCD	SCREWED
SCFM	STANDARD CUBIC FEET PER MINUTE
SCH	SCHEDULE
SD	SANITARY DRAIN & VENT / SMOKE DETECTOR
SDR	STORM DRAIN
SF	SQUARE FOOT
SHT	SHEET
SHTG	SHEATHING
SIM	SIMILAR
SOG	SLAB ON GRADE
SP	STATIC PRESSURE
SPEC	SPECIFICATION
SPK	SPIKE
SQ	SQUARE
SS	STAINLESS STEEL
SSPWC	STANDARD SPECIFICATION FOR PUBLIC WORKS CONSTRUCTION
ST	STREET / STATE
STA	STATION
STC	SLEEVE-TYPE COUPLING
STD	STANDARD
STK	STAKE
STL	STEEL
STR	STRAIGHT / STRUCTURAL
STRM	STORM
SV	SOLENOID VALVE
SW	SIDEWALK
SWD	SIDEWALK DRAIN
SY	SQUARE YARD
SYM	SYMMETRICAL / SYMBOL
T	TANGENT
T&B	TOP AND BOTTOM
T&G	TONGUE AND GROOVE
TAN	TANGENT
TBE	THREAD BOTH ENDS
TBM	TEMPORARY BENCH MARK
TC	TOP OF CURB
TEL	TELEPHONE
TEMP	TEMPORARY
TF	TOP OF FOOTING
TH	TEST HOLE
THK	THICK / THICKNESS
THR	THRESHOLD
THR'D	THREADED
TK	TANK / TACK
TL	TRAVERSE LINE
TOC	TOP OF CONCRETE
TOE	THREAD ONE END
TOP	TOP OF PIPE
TOPO	TOPOGRAPHIC
TOW	TOP OF WALL
TP	TELEPHONE POLE
TR	TRACT
TRANS	TRANSMISSION
TS	TAPPING SLEEVE
TSC	TRAFFIC SIGNAL CONDUIT
TV	TAPPING VALVE
TW	TRAVELED WAY
TYP	TYPICAL
UC	UNDER-CROSSING
UG	UNDERGROUND

UGC	UNDERGROUND CONDUIT
UNID	UNIDENTIFIED
UNO	UNLESS NOTED OTHERWISE
UOI	UNLESS OTHERWISE INDICATED
UV	ULTRAVIOLET
UW	UTILITY WATER
V	VALVE / VERTICAL / VENT / VOLT / VOLUME
VAC	VACUUM
VAR	VARIES / VARIABLE
VB	VALVE BOX
VC	VERTICAL CURVE
VCP	VITRIFIED CLAY PIPE
VERT.	VERTICAL
VOL	VOLUME
VPI	VERTICAL POINT OF INTERSECTION
VSL	VERTICALLY SLOTTED
W/	WITH
W/O	WITHOUT
WCO	WALL CLEANOUT
WD	WOOD
WDW	WINDOW
WI	WROUGHT IRON
WM	WATER MAIN
WP	WATERPROOFING / WORKING PRESSURE / WORK POINT
WSTP	WATERSTOP
WT	WEIGHT
WWP	WATER WORKING PRESSURE

LEGEND

℄	Center line
R/W	Right of way line
P	Property line
WM	Exist. Water Main
STRM	Exist. Storm Sewer
SAN	Exist. Sanitary Sewer
FM	Exist. Force Main
	Exist. Gas
TEL	Exist. Telephone
BE	Exist. Electric underground
BTV	Exist. Cable underground
O/S	Offset
D.I.	Ductile Iron
REST. J.	Restrained Joint
	Exist. Guy Wire
	Exist. Street Light Pole
	Exist. Utility Conc. Pole
	Exist. Utility Pole
	Exist. Pedestrian Crossing Light
E	Exist. Electric Box
	Exist. Street Light Box
T	Exist. Telephone Box
TR	Exist. Traffic Signal Box
TV	Exist. Cable TV Box
	Exist. C.B.
E	Exist. Electric MH
SS	Exist. Storm MH
S	Exist. Sanitary MH
T	Exist. Telephone MH
W	Exist. Water MH
W	Exist. Well
	Exist. Sprinkler
	Exist. Fire Hydrant
	Exist. Valve
	Core Boring
	Exist. Sign
W	Exist. Single Water Meter
W	Prop. Single Water Meter
WW	Prop. Dual Water Meter
	Prop. Fire Hydrant
	Prop. Tapping Sleeve w/ Tapping Valve
	Prop. Plug & FVO Plan/Prop FVO Profile
	Prop. Gate Valve
A	Prop. ARV Plan/Prop ARV Profile
	Existing WM to be Abandoned in Place
	Prop. Sampling Point

Revision	By	Appd.	YY.MM.DD

Issued	By	Appd.	YY.MM.DD

Seal

DAVE CLARKE, P.E.
State of Florida - License No. 66553

Consultants

Stantec
901 Ponce de Leon Blvd. Suite 900
Coral Gables, Florida 33134
www.stantec.com

The Contractor shall verify and be responsible for all dimensions. DO NOT scale the drawing - any errors or omissions shall be reported to Stantec without delay.
The Copyrights to all designs and drawings are the property of Stantec. Reproduction or use for any purpose other than that authorized by Stantec is forbidden.

CITY OF HALLANDALE BEACH
12" WATER MAIN ALONG FOSTER RD
CITY OF HALLANDALE BEACH, FLORIDA

File Name:	ER	DC	LF	19.07.31
	Dwn.	Chkd.	Dsgn.	YY.MM.DD

ABBREVIATIONS

Project No.	Scale	
177311197	NTS	
Drawing No.	Sheet	Revision
	G-02	

Y:\177311197\active\177311197\drawings\civil\177311197_abbreviations-notes.dwg
2020/02/07 4:28 PM By: Robaina, Eduardo

GENERAL NOTES FOR WATER AND SEWER

1. ALL APPLICABLE PERMITS MUST BE OBTAINED AND ALL APPLICABLE FEES AND CHARGES MUST BE PAID PRIOR TO COMMENCEMENT OF CONSTRUCTION.
2. A PRE-CONSTRUCTION MEETING SHALL BE HELD WITH THE CITY OF HALLANDALE BEACH ATTENDED BY THE CONTRACTOR, ENGINEER, AND OTHER INTERESTED PARTIES PRIOR TO ISSUANCE OF ANY CONSTRUCTION PERMIT.
3. THE CONTRACTOR SHALL MAINTAIN AT ALL TIMES ON THE SITE A CURRENT SET OF APPROVED CONSTRUCTION PLANS. THE PLANS SHALL BE MADE AVAILABLE TO THE CITY ENGINEER OR HIS DESIGNEE UPON REQUEST.
4. THE CONTRACTOR SHALL FIELD VERIFY THE LOCATIONS OF ALL EXISTING UTILITIES SHOWN ON THE APPROVED PLANS. APPROVAL OF DEVELOPMENT PLANS BY THE CITY IN NO WAY IMPLIES VERIFICATION OF THE ACCURACY OF THOSE PLANS OR FEATURES DEPICTED THEREON. THE ENGINEER SHALL BRING TO THE ATTENTION TO THE CITY ENGINEER OF ANY DISCREPANCIES IN, OR VARIATION FROM, THE APPROVED PLANS. THE CONTRACTOR SHALL BE RESPONSIBLE FOR THE PROTECTION OF EXIST. AND NEWLY INSTALLED UTILITIES AND IMPROVEMENTS FROM DAMAGE, DISRUPTION OF SERVICE, OR DESTRUCTION AT ALL TIMES THROUGHOUT THE DURATION OF CONSTRUCTION. THE CONTRACTOR SHALL BE RESPONSIBLE FOR TAKING SUCH MEASURES AS NECESSARY TO PROTECT THE HEALTH, SAFETY AND WELFARE OF THOSE PERSONS HAVING ACCESS TO THE WORK SITE. CONTRACTOR SHALL TAKE THE NECESSARY PRECAUTIONS TO SAFEGUARD ALL EXIST. STRUCTURES AND UTILITIES. THE LOCATION OF EXIST. UTILITIES SHOWN ON THESE PLANS ARE APPROXIMATE ONLY AND ARE BASED ON THE SURVEY AND AS-BUILT INFORMATION. ADDITIONAL UTILITIES MAY EXIST WHICH ARE NOT SHOWN ON THE PLANS. THE CONTRACTOR SHALL BE RESPONSIBLE FOR LOCATING AND VERIFYING ALL UTILITIES PRIOR TO BEGINNING CONSTRUCTION. ANY AND ALL CONFLICTS WITH EXISTING UTILITIES SHALL BE REPORTED TO THE ENGINEER. THIS WORK BY THE CONTRACTOR SHALL BE CONSIDERED INCIDENTAL TO THE CONTRACT AND NO ADDITIONAL COMPENSATION SHALL BE ALLOWED. CONTRACTOR SHALL PROVIDE IMMEDIATE WRITTEN NOTIFICATION TO THE ENGINEER IF THE CONDITIONS DIFFER FROM THE PLANS. THE CONTRACTOR SHALL BE RESPONSIBLE FOR LOCATING EXISTING UTILITIES SUFFICIENTLY IN ADVANCE OF CONSTRUCTION TO ALLOW FOR NECESSARY ADJUSTMENTS IN THE DESIGNED DEPTH AND ALIGNMENT OF THE PROPOSED PIPING. IF A CONFLICT ARISES RESULTING FROM THE CONTRACTOR'S FAILURE TO PERFORM THE DUTIES DESCRIBED ABOVE, THE CONTRACTOR SHALL BE REQUIRED TO RESOLVE THE CONFLICT AT NO ADDITIONAL COST TO THE OWNER.
5. THE CONTRACTOR SHALL BE RESPONSIBLE FOR VISITING THE JOB SITE PRIOR TO PREPARING HIS BID FOR FAMILIARIZING HIMSELF WITH THE NATURE AND THE EXTEND OF THE WORK AND LOCAL CONDITIONS, EITHER SURFACE OR SUB-SURFACE, WHICH MAY AFFECT THE WORK TO BE PERFORMED AND THE EQUIPMENT, LABOR AND MATERIAL REQUIRED. FAILURE TO DO SO WILL NOT RELIEVE THE CONTRACTOR OF COMPLETE PERFORMANCE UNDER HIS CONTRACT.
6. THE CONTRACTOR SHALL INFORM THE CITY OF HALLANDALE BEACH PUBLIC WORKS DIVISION AT LEAST 48 HOURS IN ADVANCE OF COMMENCING CONSTRUCTION AND/OR CONNECTING TO A CITY FACILITY.
7. THE CONTRACTOR SHALL BE RESPONSIBLE FOR OBTAINING LOCATIONS OF ALL UTILITIES, AND MODIFICATIONS OF SUNSHINE ONE CALL 1-800-432-4770 48 HOURS IN ADVANCE OF CONSTRUCTION.
8. THE CONTRACTOR SHALL BE RESPONSIBLE FOR THE SCHEDULING OF, AND PAYMENT FOR, SUCH TESTS AS MAY BE DEEMED NECESSARY BY THE ENGINEER OR THE CITY ENGINEER, AND AS CALLED FOR IN THE PLANS AND SPECIFICATIONS.
9. CONSTRUCTION SHALL BE CARRIED OUT IN STRICT COMPLIANCE WITH THOSE STANDARDS ACCEPTED BY THE CITY OF HALLANDALE BEACH (BROWARD COUNTY PUBLIC WORKS STANDARD DETAILS).
10. THE CONTRACTOR SHALL INSTALL EROSION CONTROL DEVICES TO PREVENT THE TRANSPORT OF SEDIMENT DOWNSTREAM INTO THE STREETS, STORM SEWERS, PRIVATE LOTS, CANALS, ETC. AND OBTAIN NECESSARY PERMITS PRIOR TO COMMENCEMENT OF ANY CONSTRUCTION. EROSION CONTROL DEVICES SHALL BE INSPECTED AND MAINTAINED ON A REGULAR BASIS DURING THE LENGTH OF CONSTRUCTION. THE CONTRACTOR SHALL REPAIR AND REPLACE EROSION CONTROL DEVICES AT NO COST TO THE OWNER. EROSION CONTROL DEVICES SHALL BE INSPECTED FOLLOWING EACH STORM EVENT. THE CONTRACTOR SHALL PERFORM TESTING AND PROVIDE RESULTS TO THE ENGINEER THAT CONFIRM DISCHARGE LIMITS ARE BEING MET DURING DEWATERING OPERATIONS. THE CITY AND ENGINEER RESERVE THE RIGHT TO SUSPEND CONSTRUCTION OPERATIONS IF POLLUTION IS SUSPECTED OR THE REQUIRED PERMIT DISCHARGE LIMITS ON RECEIVING WATER BODIES, TESTING AND RESULTS HAVE NOT BEEN PROVIDED.
11. THE ENGINEER SHALL MAKE SUFFICIENT INSPECTIONS OF THE WORK TO ENABLE HIM TO CERTIFY THE INSTALLATION AS BEING IN CONFORMANCE WITH THE APPLICABLE STANDARDS AND SPECIFICATIONS.
12. THE CITY OF HALLANDALE BEACH WILL CARRY OUT INSPECTIONS OF THE WORK, WILL INFORM THE CONTRACTOR WHEN TO BACKFILL THE WORK, AND WILL WITNESS ALL PRESSURE, BACTERIOLOGICAL AND INFILTRATION/EXFILTRATION TESTS. THE CONTRACTOR SHALL PROVIDE ALL TESTING & MATERIAL TESTING RESULTS TO THE ENGINEER. THE CONTRACTOR SHALL PROVIDE COMPACTION TESTING ON HORIZONTAL STRAIGHT RUNS OF PIPE. THE BACTERIOLOGICAL SAMPLING POINTS SHALL BE LOCATED AS SHOWN AND AS REQUIRED BY THE BROWARD COUNTY HEALTH DEPARTMENT.
13. SANITARY SEWERS AND FORCE MAINS SHOULD CROSS UNDER WATER MAIN WHENEVER POSSIBLE. SANITARY SEWERS AND FORCE MAINS CROSSING WATER MAINS SHALL BE LAID TO PROVIDE A MIN. VERTICAL DISTANCE OF 18 INCHES BETWEEN THE INVERT OF UPPER PIPE AND THE CROWN OF LOWER PIPE WHENEVER POSSIBLE. WHERE SANITARY SEWERS OR FORCE MAINS MUST CROSS A WATER MAIN WITH LESS THAN 18 INCHES VERTICAL DISTANCE, BOTH THE SEWER AND WATER MAINS SHALL BE CONSTRUCTED OF DUCTILE IRON PIPE (DIP), MIN. CLASS 52 AT THE CROSSING. SUFFICIENT LENGTHS OF DIP MUST BE USED TO PROVIDE A MIN. SEPARATION OF 10 FEET BETWEEN ANY TWO JOINTS. ALL JOINTS ON THE WATER MAIN WITHIN THE 20 FEET OF THE CROSSING MUST BE MECHANICALLY RESTRAINED. A MIN. VERTICAL CLEARANCE OF 12 INCHES MUST BE MAINTAINED AT ALL CROSSINGS. ALL CROSSINGS SHALL BE ARRANGED SO THAT THE SEWER PIPE AND THE WATER MAIN JOINTS ARE EQUIDISTANT FROM THE POINT OF CROSSING (PIPES CENTERED ON THE CROSSING). WHERE A NEW PIPE CONFLICTS WITH AN EXIST. PIPE WITH LESS THAN 18 INCHES VERTICAL CLEARANCE, THE PIPE SHALL BE ARRANGED TO MEET THE CROSSING REQUIREMENTS ABOVE.
14. A MIN. OF 6-FOOT HORIZONTAL SEPARATION SHALL BE MAINTAINED BETWEEN ANY TYPE OF SEWER AND WATER MAIN IN PARALLEL INSTALLATIONS WHERE POSSIBLE. IN CASES WHERE IT IS NOT POSSIBLE TO MAINTAIN A 10 FOOT SEPARATION, THE WATER MAIN MUST BE LAID IN A SEPARATE TRENCH OR ON AN UNDISTURBED EARTH SHELF LOCATED ON ONE SIDE OF THE SEWER OR FORCE MAIN AT SUCH AN ELEVATION THAT THE BOTTOM OF THE WATER MAIN IS AT LEAST 18 INCHES ABOVE THE TOP OF THE SEWER. WHERE IT IS NOT POSSIBLE TO MAINTAIN A VERTICAL DISTANCE OF 18 INCHES IN PARALLEL INSTALLATIONS, THE WATER MAIN AND SANITARY SEWER/FORCE MAIN SHALL BE CONSTRUCTED OF DIP WITH A MIN. VERTICAL SEPARATION OF 6 INCHES. THE WATER MAIN SHOULD ALWAYS BE ABOVE THE SEWER. JOINTS ON THE WATER MAIN SHALL BE LOCATED AS FAR APART AS POSSIBLE FROM JOINTS ON THE SEWER OR FORCE MAIN (STAGGERED JOINTS).
15. NO DEVIATION FROM APPROVED PLANS SHALL BE PERMITTED WITHOUT THE WRITTEN CONSENT OF THE CITY ENGINEER.
16. ALL WORK SHALL BE DONE IN A SAFE MANNER. ALL SAFETY RULES AND GUIDELINES OF OSHA AND THE FLORIDA TRENCH SAFETY ACT SHALL BE FOLLOWED. THE CONTRACTOR SHALL BE WHOLLY RESPONSIBLE FOR ANY INJURIES OF HIS EMPLOYEES AND DAMAGE TO PRIVATE PROPERTY OR PERSONS RESULTING FROM HIS JOB.
17. THE CONTRACTOR SHALL MEET ALL NOTES, STANDARDS, SPECIFICATIONS AND PERMIT REQUIREMENTS AND SHALL INCLUDE ALL EXPENSES REQUIRED TO COMPLETE THE WORK AS PART OF THE BID AND CONTRACT AND SHALL CAUSE NO DELAY OR ADDITIONAL COST TO THE OWNER.
18. THE CONTRACTOR SHALL REMOVE AND DISPOSE ALL EXCESS MATERIAL FROM THE SITE THAT DOES NOT MEET THE SPECIFICATIONS FOR ADEQUATE BACKFILL OR OTHER PERMITTED USE.
19. NO VALVES SHALL BE INSTALLED IN CURB OR SIDEWALKS.
20. FIRE HYDRANTS SHALL BE PLACED A MINIMUM OF 7 FEET FROM RIGHT OF WAY; HAVE A MINIMUM OF 3 FOOT CLEARANCE FROM ANY STRUCTURE OR OBSTRUCTION WITH BOLLARDS, AND MEET CITY OF HALLANDALE BEACH INSTALLATION REQUIREMENTS.
21. PIPELINES SHALL BE INSTALLED IN ACCORDANCE WITH THE HORIZONTAL AND VERTICAL DATUM SHOWN AND ALL NEW PIPING SHALL BE INSTALLED WITH A MINIMUM COVER OF 36 INCHES. ALL WATER MAIN INSTALLATION SHALL COMPLY WITH THE REQUIREMENTS OF CHAPTER 62-555 OF THE FLORIDA ADMINISTRATION CODE (F.A.C.) AS APPLICABLE.
22. ANY DAMAGE TO EXISTING STRUCTURES, ROADS, CONCRETE OR ASPHALT DRIVEWAYS, SIDEWALKS, UTILITIES, LANDSCAPING OR OTHER FACILITIES CAUSED BY THE ACTIVITIES OF THE CONTRACTOR WHETHER IN THE RIGHT OF WAY OR ON PRIVATE PROPERTY SHALL BE RESTORED TO ITS ORIGINAL OR BETTER CONDITION AS DETERMINED BY THE ENGINEER AND SPECIFICATIONS. ALL COSTS FOR THE RESTORATION SHALL BE INCLUDED IN THE BID PRICE. ALL PAVEMENT MARKINGS AND SIGNS SHALL BE REPLACED TO MATCH EXISTING CONDITIONS MEETING CURRENT BROWARD COUNTY AND HIGHWAY CONSTRUCTION & ENGINEERING STANDARDS.
23. ALL PIPE TRENCHES SHALL BE BACKFILLED AT THE END OF EACH WORK DAY, MEETING THE REQUIREMENTS OF SPECIFICATIONS.
24. ALL FITTINGS AND VALVES SHALL BE RESTRAINED AND PIPING LENGTHS RESTRAINED MEETING THE MINIMUM REQUIREMENTS OF THE THRUST RESTRAINT SCHEDULE PER BROWARD COUNTY STANDARD INDEX 109.
25. THE LOCATION OF SERVICE CONNECTIONS AND FIRE HYDRANTS ARE APPROXIMATE. THE CONTRACTOR SHALL FIELD ADJUST AS REQUIRED TO AVOID EXISTING DRIVEWAYS, TREES, STRUCTURES, AND OTHER FEATURES. ALL EQUIPMENT SHALL BE INSTALLED IN ACCORDANCE WITH THE STANDARD DETAILS AND SPECIFICATIONS.
26. ALL WATER PIPES SHALL COMPLY WITH THE COLOR CODING REQUIREMENTS OF CHAPTER 62-555.320 F.A.C.. REFER TO PVC PIPE AND DIP PIPE SPECIFICATIONS.
27. THE CONTRACTOR SHALL PROVIDE CONTINUOUS ACCESS FOR ALL RESIDENTS TO AND FROM THEIR HOMES. A MINIMUM OF ONE LANE OF TRAFFIC IN EACH DIRECTION SHALL BE PROVIDED WHEREVER FEASIBLE. THE CONTRACTOR MAY HAVE TO RESTRICT TRAFFIC TO ONE-WAY OPERATION FOR SHORT PERIODS OF TIME PROVIDED THE CONTRACTOR EMPLOYS ADEQUATE MEANS OF TRAFFIC CONTROL AND DOES NOT UNREASONABLY DELAY TRAFFIC, AND CONFORMS TO THE APPROVED REQUIREMENTS IN THE TCP. DURING ALL NON-CONSTRUCTION HOURS, THE CONTRACTOR SHALL ADEQUATELY MARK AND SECURE THE WORK AREA TO SECURE THE SAFETY OF RESIDENTS AND VEHICULAR TRAFFIC.
28. PIPE SHALL BE PRESSURE TESTED IN ACCORDANCE WITH AWWA C600, AWWA C605, AND THE CITY OF HALLANDALE BEACH PRESSURE TESTING PROCEDURES. REFER TO SPECIFICATIONS. TEST PROCEDURE AND ALLOWABLE LEAKAGE ARE SUMMARIZED IN THE TABLE BELOW:

PIPE TYPE	TESTING STANDARDS	TEST PRESSURE (PSI)	TEST DURATION	ALLOWED LEAKAGE
DIP (ALL JOINT)	AWWA C600	155 PSI	2 HRS	SEE EQTN A
PVC	AWWA C605	155 PSI	2 HRS	SEE EQTN A

EQTN A: $Q = (L*D*P) / 148{,}000$

Q: ALLOWABLE LEAKAGE, GPH
L : LENGTH TESTED, FT
D: NOMINAL PIPE DIAMETER, IN
P: TEST PRESSURE, PSI

29. IT SHALL BE THE RESPONSIBILITY OF THE CONTRACTOR TO SHAPE THE PAVEMENT AT INTERSECTIONS, STREETS AND DRIVEWAYS SO THAT POSITIVE DRAINAGE WILL BE MAINTAINED WITH NO PONDING OF WATER AS A RESULT OF THE NEW CONSTRUCTION.
30. EXISTING CURB TO REMAIN. REPLACEMENT OF EXISTING CURB DUE TO REMOVAL/DAMAGE DURING EXCAVATION OR ANY OTHER CONTRACTOR OPERATION SHALL BE REPAIRED AT THE CONTRACTOR'S EXPENSE.
31. CONTRACTOR IS RESPONSIBLE TO KEEP ON SITE MATERIAL TO TEMPORARILY REPAIR ANY DAMAGE CAUSED TO EXISTING UTILITIES WHILE INSTALLING PROPOSED PIPE.
32. THE CONTRACTOR SHALL ADJUST (AS REQUIRED) PIPELINE ALIGNMENTS HORIZONTALLY AND/OR VERTICALLY TO AVOID CONFLICTS WITH ACTUAL FIELD CONDITIONS AS UNCOVERED DURING CONSTRUCTION. FIELD ADJUSTMENTS SHALL BE COORDINATED WITH, AND APPROVED BY, THE ENGINEER AND CITY.
33. ALL PIPES INDICATED TO BE GROUTED AND ABANDONED IN PLACE. FLOWABLE FILL OR GROUT MIX SHALL BE APPROVED BY THE ENGINEER AND MEET SPECIFICATIONS.
34. THE LOCATION OF THE UTILITIES SHOWN IN THE PLANS (INCLUDING THOSE DESIGNATED VVH) ARE BASED ON LIMITED INVESTIGATION TECHNIQUES AND SHOULD BE CONSIDERED APPROXIMATE ONLY. THE VERIFIED LOCATIONS/ELEVATIONS APPLY ONLY AT THE POINTS SHOWN. INTERPOLATIONS BETWEEN THESE POINTS HAVE NOT BEEN VERIFIED.
35. WATER METERS & BOX INSTALLATIONS SHALL BE COORDINATED WITH THE CITY . CONTRACTOR TO VERIFY CONDITION OF METERS AND METERS BOXES TO BE REUSED. CONTRACTOR IS RESPONSIBLE FOR MAKING THE CONNECTION TO CUSTOMER'S.
36. UTILITY AGENCY/OWNERS BELOW:

RESURGENCE INFRASTRUCTURE GROUP	SCOTT DRAKE	404-932-4156
AMERICAN TRAFFIC SOLUTIONS	SANTIAGO MARTINEZ	480-596-45-95
AT&T LONG DISTANCE	NANCY SPENCE	770-918-5424
AT&T	DINO FARRUGIO	561-997-0240
BROWARD COUNTY TRAFFIC ENGINEERING	ROBERT BLOUNT	954-847-2745
BROWARD COUNTY WATER AND WASTEWATER	HALINA PLUTA	954-831-0917
COMCAST	LEONARD MAXWELL	754-221-1254
FLORIDA CITY GAS	GUSTAVO PENA	305-835-3624
CITY OF HALLANDALE BEACH	JEANINE ATHIAS	954-457-3042
FDOT ITS	CAROLYN LEACH	954-847-2690
FPL DISTRIBUTION	JOEL BRAY	386-586-6403
FPL TRANSMISSION	EDDIE FREAY	305-938-1936
CROWN CASTLE	DANNY HASKETT	786-610-7073
CITY OF HOLLYWOOD UTILITIES	GREG JEFFRIES	561-314-4445
CENTURYLINK	KENDALL ZETINA	918-547-0547
MCI	DEAN MOYERS	469-886-4238
TECO PEOPLES GAS	JOAN DOMNING	813-275-3783
TOWN OF PEMBROKE PARK	CRAIG SMITH	561-997-0240
SPRINT	JON BAKER	352-409-5095

37. THE FOLLOWING DOCUMENTS ARE TO BE ON FILE AT THE OFFICE OF THE CITY ENGINEER PRIOR TO THE CONNECTION OF THE FIRST WATER METER:
    - 1.1. LETTERS OF ACCEPTANCE FROM:
    - 1.1.1. BROWARD COUNTY HEALTH DEPT.
    - 1.1.2. BROWARD COUNTY DER - WASTEWATER LICENSING SECTION/ FL. DEPT. OF ENVIRONMENTAL PROTECTION (FDEP)
    - 1.1.3. COPIES OF BACTERIOLOGICAL REPORTS STAMPED BY THE HEALTH DEPARTMENT
    - 1.1.4. CERTIFICATION OF ENGINEER OF RECORD
    - 1.1.5. LETTER FROM DEVELOPER STATING THAT NO LIENS HAVE BEEN FILED RELATING TO INSTALLATION OF UTILITIES
    - 1.1.6. BILL OF SALE ABSOLUTE FOR SYSTEM
    - 1.1.7. GRANT OF EASEMENT OR LETTER STATING THAT EASEMENTS ARE ON THE PLAT
    - 1.1.8. FINAL INSPECTION VERIFICATION BY CITY OF HALLANDALE BEACH ENGINEERING INSPECTOR.
    - 1.1.9. TEMPORARY METER REMOVAL LETTER
38. ALL INSTALLATIONS WITHIN BROWARD COUNTY RIGHT-OF-WAY SHALL BE IN CONFORMITY WITH BROWARD COUNTY ENGINEERING DIVISION "MINIMUM STANDARDS".

ASBESTOS PIPE REMOVAL, HANDLING, CUTTING, DISTURBANCE AND DISPOSAL

1. ALL REMOVAL, HANDLING, CUTTING, DISTURBANCE, AND DISPOSAL OF ASBESTOS CEMENT (AC) WATER PIPE, JOINTS, WRAPPING, AND OTHER ASBESTOS CONTAINING MATERIALS RELATED TO THE AC PIPE WORK SHALL BE IN STRICT ACCORDANCE WITH REGULATIONS SET FORTH BY EPA, NESHAP, OSHA, DEP, USDOT, AND ANY OTHER APPLICABLE STATE, LOCAL, OR FEDERAL REGULATING AGENCIES.
2. THE WORK SHALL INCLUDE BUT NOT BE LIMITED TO MOBILIZATION AND DEMOBILIZATION, LABOR, MATERIALS, OVERHEAD PROFIT, TAXES, TRANSPORTATION, DISPOSAL FEES, ADMINISTRATIVE FEES, INCIDENTAL COSTS, ETC. ALL IN ACCORDANCE WITH THE PAYMENT SCHEDULE IN THE BID PROPOSAL. ESTIMATING AREAS, QUANTITIES, WEIGHT, ETC. ARE THE SOLE RESPONSIBILITY OF THE CONTRACTOR.
3. THE CONTRACTOR SHALL REMOVE, SEAL, TRANSPORT AND DISPOSE OF ALL IMPACTED CEMENT ASBESTOS WATER MAIN IN COMPLIANCE WITH ALL CURRENT FEDERAL, STATE, AND LOCAL REGULATIONS, LAWS, ORDINANCES, RULES, STANDARDS AND REGULATORY AGENCY REQUIREMENTS.
4. ASBESTOS DISTURBANCE AND/OR REMOVAL ACTIVITIES SHALL BE CONDUCTED BY PROPERLY TRAINED, ACCREDITED, AND LICENSED PERSONNEL USING PROPER PERSONAL PROTECTIVE EQUIPMENT.
5. THE CONTRACTOR SHALL NOTIFY THE CITY AND OWNER'S REPRESENTATIVE AT LEAST 72 HOURS IN ADVANCE PRIOR TO BEGINNING REMOVAL AND/OR DISTURBANCE OF AC PIPE.
6. ALL REQUIRED NOTIFICATIONS TO STATE REGULATORY AGENCIES SHALL BE MADE BY THE CONTRACTOR WITH COPIES PROVIDED TO THE CITY AND OWNER'S REPRESENTATIVE.
7. THE CONTRACTOR SHALL HAVE A SUPERVISOR WHO IS AN OSHA COMPETENT PERSON; PRESENT ON THE JOB SITE AT ALL TIMES THE WORK IS IN PROGRESS. THIS SUPERVISOR SHALL BE THOROUGHLY FAMILIAR AND EXPERIENCED WITH ASBESTOS DISTURBANCE AND OTHER RELATED WORK, AND SHALL BE FAMILIAR WITH AND SHALL ENFORCE THE USE OF ALL SAFETY PROCEDURES AND EQUIPMENT. THE SUPERVISOR SHALL BE KNOWLEDGEABLE OF ALL APPLICABLE EPA, OSHA, AND NESHAP REQUIREMENTS AND GUIDELINES.
8. PRIOR TO COMMENCING ANY PREPARATION OF THE WORK AREAS FOR ASBESTOS DISTURBANCE, THE CONTRACTOR SHALL POST ALL REQUIRED DOCUMENTS, WARNING SIGNS, AND AS NECESSARY, ERECT PHYSICAL BARRIERS TO SECURE THE WORK . THE CONTRACTOR HAS SOLE AND PRIMARY RESPONSIBILITY FOR THE INSPECTION OF THE WORK AT ALL STAGES, AND FOR THE SUPERVISION OF THE PERFORMANCE OF THE WORK AREA.
9. THE CONTRACTOR SHALL BE RESPONSIBLE FOR SITE SAFETY AND FOR TAKING ALL NECESSARY PRECAUTIONS TO PROTECT THE CONTRACTOR'S WORKER, CITY OF HALLANDALE BEACH PERSONNEL, AND THE PUBLIC FROM ASBESTOS EXPOSURE AND/OR INJURY. THE CONTRACTOR SHALL BE RESPONSIBLE FOR MAINTAINING THE INTEGRITY OF THE WORK AREA.
10. THE CONTRACTOR SHALL CONFINE OPERATIONS AT THE SITE TO THE AREA REQUIRING DISTURBANCE OF AC PIPE AND THE GENERAL SITE AREA ASSOCIATED WITH THE PROXIMITY OF THE PROJECT. PORTIONS OF THE SITE BEYOND AREAS, IN WHICH THE INDICATED WORK IS REQUIRED, ARE NOT TO BE DISTURBED. THE CONTRACTOR SHALL NOT UNREASONABLY ENCUMBER THE SITE WITH MATERIALS OR EQUIPMENT. IF CEMENT ASBESTOS WATER MAIN IS REQUIRED TO BE STORED OVERNIGHT, IT SHALL BE PROPERLY LABELED, SECURED, AND CONTAINERIZED TO PRECLUDE UNAUTHORIZED DISTURBANCE OF THE WASTE MATERIAL.
11. THE CONTRACTOR SHALL BE RESPONSIBLE FOR THE TRANSPORT AND DISPOSAL OF CEMENT ASBESTOS WATER MAIN TO A DULY LICENSED LANDFILL FACILITY PERMITTED TO ACCEPT ASBESTOS WASTE. THE CONTRACTOR SHALL BE RESPONSIBLE FOR OBTAINING AND COORDINATING WASTE DISPOSAL AUTHORIZATION FROM A LICENSED LANDFILL. WASTE MANIFESTS SHALL BE USED TO TRANSPORT THE AC PIPE FROM THE PROJECT SITE TO THE FINAL LANDFILL DISPOSAL SITE. THE CONTRACTOR SHALL SIGN MANIFESTS AS THE GENERATOR OF THE AC PIPE AND SHALL PROVIDE COPIES TO THE CITY AND OWNER'S REPRESENTATIVE FOR FINAL PAYMENT.
12. THE CONTRACTOR SHALL MONITOR ASBESTOS EXPOSURE AND MAINTAIN ALL WORKERS EXPOSURE BELOW OSHA'S PERMISSIBLE EXPOSURE LIMIT (PEL).

The Contractor shall verify and be responsible for all dimensions. DO NOT scale the drawing - any errors or omissions shall be reported to Stantec without delay.
The Copyrights to all designs and drawings are the property of Stantec. Reproduction or use for any purpose other than that authorized by Stantec is forbidden.

CITY OF HALLANDALE BEACH
12" WATER MAIN ALONG FOSTER RD
CITY OF HALLANDALE BEACH, FLORIDA

File Name:	ER	DC	LF	19.07.31
	Dwn.	Chkd.	Dsgn.	YY.MM.DD

GENERAL NOTES & LEGEND

Project No.	Scale	
177311197	NTS	
Drawing No.	Sheet	Revision
	G-03	

LEGEND

PROP. FH 250' RADIUS

PROP. FH

Revision	By	Appd.	YY.MM.DD

Issued	By	Appd.	YY.MM.DD

Seal

DAVE CLARKE, P.E.
State of Florida - License No. 66553

Consultants

Stantec
901 Ponce de Leon Blvd. Suite 900
Coral Gables, Florida 33134
www.stantec.com

The Contractor shall verify and be responsible for all dimensions. DO NOT scale the drawing - any errors or omissions shall be reported to Stantec without delay.
The Copyrights to all designs and drawings are the property of Stantec. Reproduction or use for any purpose other than that authorized by Stantec is forbidden.

CITY OF HALLANDALE BEACH
12" WATER MAIN ALONG FOSTER RD
CITY OF HALLANDALE BEACH, FLORIDA

File Name:	ER	DC	LF	19.07.31
	Dwn.	Chkd.	Dsgn.	YY.MM.DD

FIRE HYDRANT SPACING

Project No.	Scale	
177311197	AS NOTED	
Drawing No.	Sheet	Revision
	G-04	

V:\1773\active\177311197\drawings\civil\177311197_FH Spacing.dwg
2020/02/07 4:28 PM By: Robaina, Eduardo

BROWARD COUNTY PUBLIC WORKS DEPARTMENT — STANDARD DETAIL

WATER & WASTEWATER SERVICES
ENGINEERING DIVISION
2555 WEST COPANS ROAD
POMPANO BEACH, FL 33069
PHONE NO. 954-831-0745
FAX: 954-831-0925

WATER MAIN SEPARATION IN ACCORDANCE WITH F.A.C. RULE 62-555.314

OTHER PIPE	HORIZONTAL SEPARATION	CROSSINGS (1) (4)	JOINT SPACING @ CROSSINGS (FULL JOINT CENTERED)
STORM SEWER, STORM WATER FORCE MAIN, RECLAIMED WATER (2)	Water Main; 3 ft. minimum	Water Main; 12 inches is the minimum, except for storm sewer, then 6 inches is the minimum and 12 inches is preferred	Alternate 3 ft. minimum; Water Main
VACUUM SANITARY SEWER	Water Main; 10 ft. preferred 3 ft. minimum	Water Main; 12 inches preferred 6 inches min	Alternate 3 ft. minimum; Water Main
GRAVITY SANITARY SEWER,(3) SANITARY SEWER FORCE MAIN, RECLAIMED WATER	Water Main; 10 ft. preferred 6 ft. minimum	Water Main; 12 inches is the minimum, except for gravity sewer, then 6 inches is the minimum and 12 inches is preferred	Alternate 6 ft. minimum; Water Main
ON-SITE SEWAGE TREATMENT & DISPOSAL SYSTEM	10 ft. minimum	—	—

(1) WATER MAIN SHOULD CROSS ABOVE OTHER PIPE. WHEN WATER MAIN MUST BE BELOW OTHER PIPE, THE MINIMUM SEPARATION IS 12 INCHES.
(2) RECLAIMED WATER REGULATED UNDER PART III OF CHAPTER 62-610, F.A.C.
(3) 3 FT. FOR GRAVITY SANITARY SEWER WHERE THE BOTTOM OF THE WATER MAIN IS LAID AT LEAST 6 INCHES ABOVE THE TOP OF THE GRAVITY SANITARY SEWER.
(4) 18" VERTICAL MINIMUM SEPARATION REQUIRED BY WWS, UNLESS OTHERWISE APPROVED.

REPLACES FORMER DWG NO.105 | REVISED 5/14/2018 | WATER MAIN SEPARATION | FIGURE 105

BROWARD COUNTY PUBLIC WORKS DEPARTMENT — STANDARD DETAIL

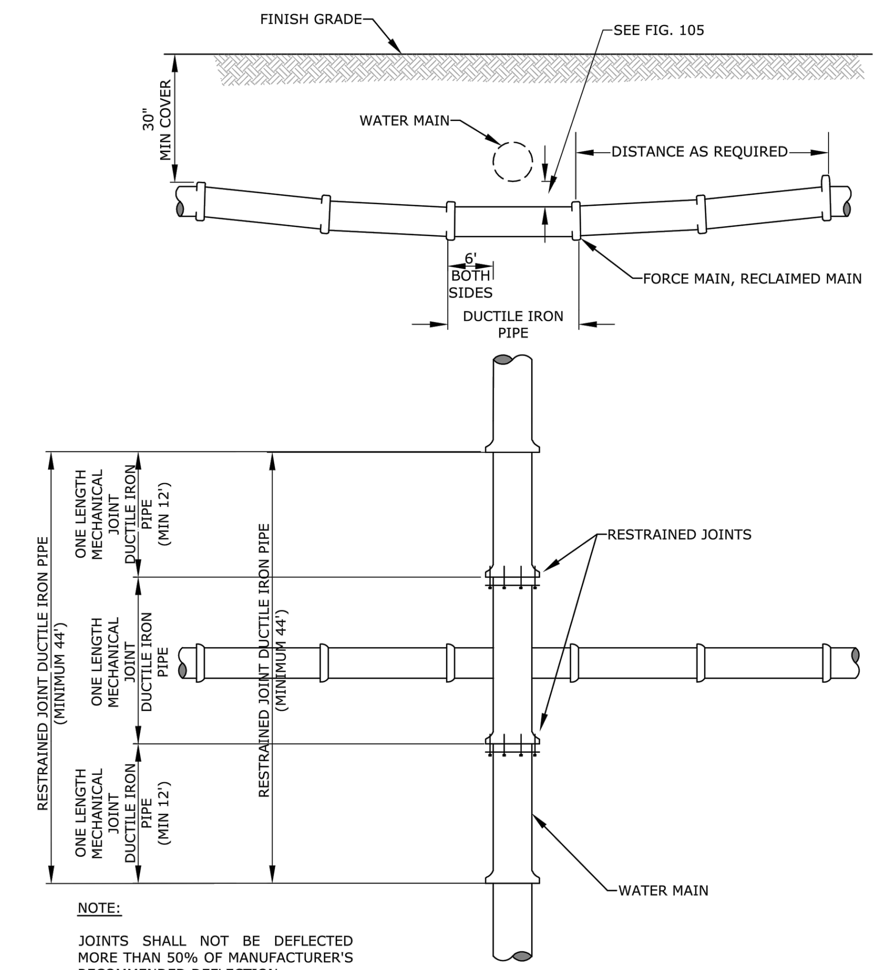

NOTE:

JOINTS SHALL NOT BE DEFLECTED MORE THAN 50% OF MANUFACTURER'S RECOMMENDED DEFLECTION

REPLACES FORMER DWG NO.16B | REVISED 5/14/2018 | STANDARD UTILITY CROSSING | FIGURE 106

BROWARD COUNTY PUBLIC WORKS DEPARTMENT — STANDARD DETAIL

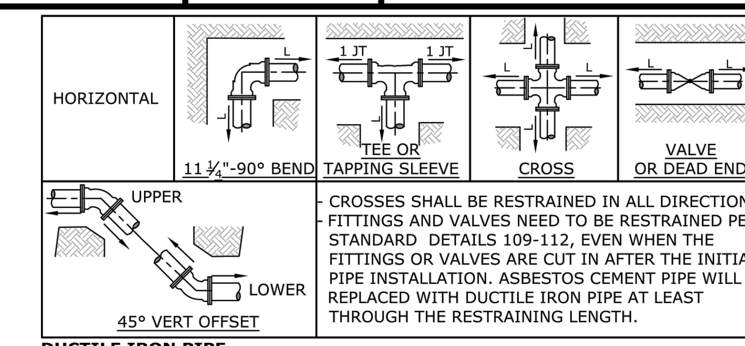

- CROSSES SHALL BE RESTRAINED IN ALL DIRECTIONS.
- FITTINGS AND VALVES NEED TO BE RESTRAINED PER STANDARD DETAILS 109-112, EVEN WHEN THE FITTINGS OR VALVES ARE CUT IN AFTER THE INITIAL PIPE INSTALLATION. ASBESTOS CEMENT PIPE WILL BE REPLACED WITH DUCTILE IRON PIPE AT LEAST THROUGH THE RESTRAINING LENGTH.

DUCTILE IRON PIPE

HORIZONTAL, L (FEET)							45° VERTICAL OFFSET (FEET)	
Diameter	11 ¼°	22 ½°	45°	90°	Tee or Cross	Valves and Dead End	UPPER	LOWER
4	1	2	4	10	7	20	9	4
6	2	3	6	14	15	28	12	5
8	2	4	8	17	23	37	16	7
10	2	5	9	21	30	44	19	8
12	3	5	10	24	38	52	22	9

PVC PIPE

HORIZONTAL, L (FEET)							45° VERTICAL OFFSET (FEET)	
Diameter	11 ¼°	22 ½°	45°	90°	Tee or Cross	Valves and Dead End	UPPER	LOWER
4	2	3	5	12	11	32	14	5
6	2	4	7	16	23	45	19	6
8	3	5	9	21	37	59	25	8
10	3	5	11	25	48	71	30	9
12	3	6	12	29	61	83	35	11

THE NOTED REQUIREMENTS WERE CALCULATED IN ACCORDANCE WITH THRUST RESTRAINT CALCULATOR V7.2 BY EBAA IRON WITH THE FOLLOWING ASSUMPTIONS:
SOIL CONDITIONS: SW OR GW; NOMINAL SIZE EQUALS BRANCH SIZE; LENGTH ALONG RUN EQUALS 4 FEET
LAYING CONDITION: 4, SAND BEDDING, BACKFILL COMPACTED > 80%; VERTICAL LOW SIDE DEPTH EQUALS 3.5 FEET
MINIMUM COVER: 3.0 FT SAFETY FACTOR: 1.5 BARE PIPE (NO POLY WRAP)
IF FIELD CONDITIONS DIFFER FROM THE ABOVE, CONTRACTOR SHALL NOTIFY WWS.
FOR PIPE LARGER THAN INCLUDED IN THE ABOVE TABLES, ENGINEER OF RECORD SHALL SUBMIT CALCULATIONS FOR EACH JOINT REQUIRING RESTRAINT.

SINGLE FITTING RESTRAINED JOINT
150 PSI TEST PRESSURE

REPLACES FORMER DWG NO.109 | REVISED 5/14/2018 | RESTRAINED JOINT REQUIREMENTS SINGLE FITTING | FIGURE 109

BROWARD COUNTY PUBLIC WORKS DEPARTMENT — STANDARD DETAIL

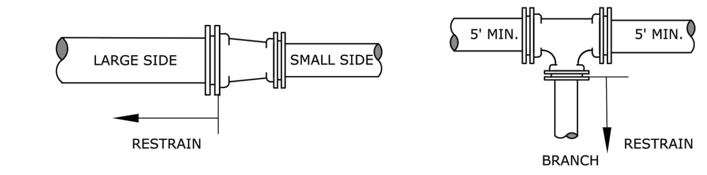

STRAIGHT REDUCER

DUCTILE IRON PIPE				
DIAMETER	6"	8"	10"	12"
4"	15'	27'	36'	45'
6"		16'	27'	38'
8"			15'	28'
10"				16'
PVC PIPE				
	6"	8"	10"	12"
4"	24'	43'	58'	72'
6"		25'	44'	61'
8"			24'	44'
10"				25'

(SMALL SIDE)

TEE REDUCER

DUCTILE IRON PIPE				
DIAMETER	6"	8"	10"	12"
4"	1'	1'	1'	1'
6"		6'	1'	1'
8"			15'	10'
10"				23'
PVC PIPE				
	6"	8"	10"	12"
4"	1'	1'	1'	1'
6"		16'	8'	1'
8"			31'	25'
10"				44'

(BRANCH SIZE)

THE NOTED REQUIREMENTS WERE CALCULATED IN ACCORDANCE WITH THRUST RESTRAINT CALCULATOR V7.2 BY EBAA IRON WITH THE FOLLOWING ASSUMPTIONS:
SOIL CONDITIONS: SW OR GW; LENGTH ALONG RUN EQUALS 4 FEET
LAYING CONDITION: 4, SAND BEDDING, BACKFILL COMPACTED > 80%
MINIMUM COVER: 3.0 FT;SAFETY FACTOR: 1.5;BARE PIPE (NO POLY WRAP)
IF FIELD CONDITIONS DIFFER FROM THE ABOVE, CONTRACTOR SHALL NOTIFY WWS.
FOR PIPE LARGER THAN INCLUDED IN THE ABOVE TABLES, ENGINEER OF RECORD SHALL SUBMIT CALCULATIONS FOR EACH JOINT REQUIRING RESTRAINT.

RESTRAINED REDUCING FITTING
150 PSI TEST PRESSURE

REPLACES FORMER DWG NO.112 | REVISED 5/14/2018 | RESTRAINED JOINT REQUIREMENTS REDUCING FITTINGS | FIGURE 112

BROWARD COUNTY PUBLIC WORKS DEPARTMENT — STANDARD DETAIL

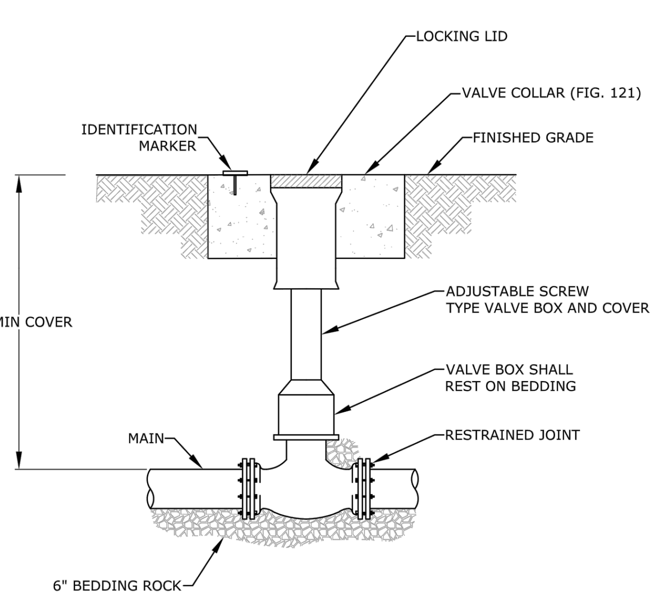

1. WHEN VALVE IS NOT LOCATED IN PAVEMENT, PLACE A WHITE REFLECTIVE RAISED PAVEMENT MARKER IN THE DRIVE LANE, ADJACENT TO THE VALVE.
2. OPERATOR EXTENSION SHAFT SHALL BE PROVIDED WHEN OPERATING NUT IS MORE THAN 24" BELOW TOP OF VALVE BOX.
3. PVC PIPE OR DUCTILE IRON PIPE IS NOT ACCEPTABLE FOR VALVE BOX RISER.

REPLACES FORMER DWG NO.123 | REVISED 5/14/2018 | VALVE BOX DETAIL | FIGURE 123

BROWARD COUNTY PUBLIC WORKS DEPARTMENT — STANDARD DETAIL

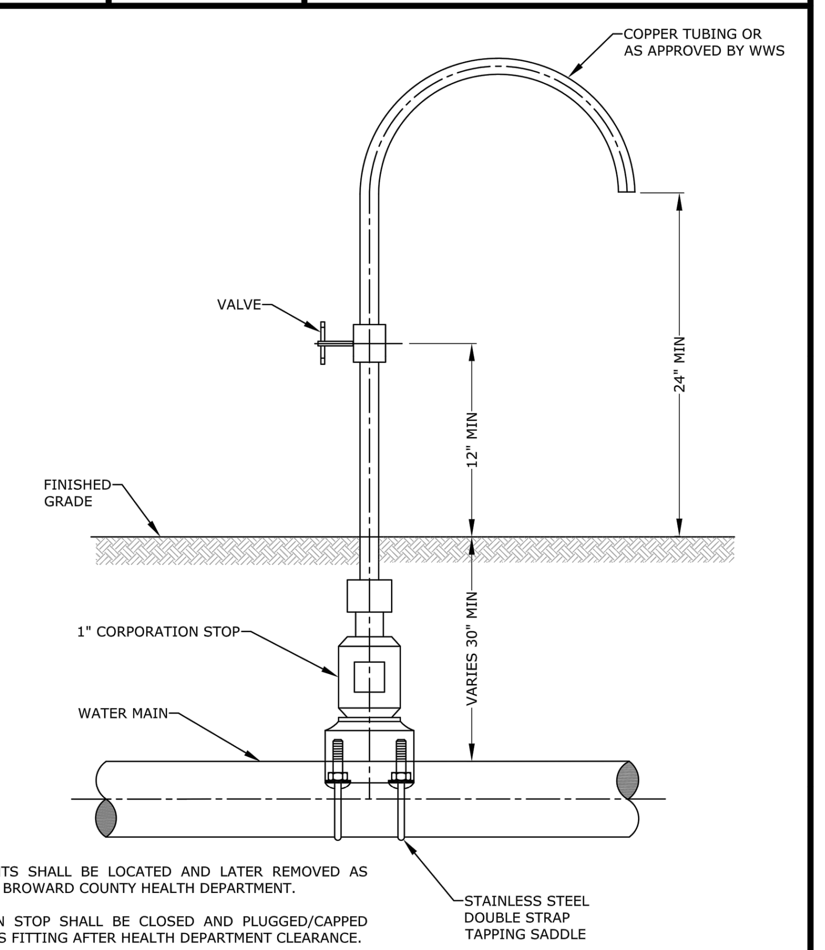

NOTES:

1. SAMPLE POINTS SHALL BE LOCATED AND LATER REMOVED AS REQUIRED BY BROWARD COUNTY HEALTH DEPARTMENT.
2. CORPORATION STOP SHALL BE CLOSED AND PLUGGED/CAPPED WITH A BRASS FITTING AFTER HEALTH DEPARTMENT CLEARANCE.
3. SAMPLING POINTS MAY BE PLACED AT THE ENDS OF WATER SERVICES BEFORE THE METERS AND ON BLOW OFFS FOR TERMINAL WATER MAINS, WHERE SERVICES AND BLOW OFFS ARE REQUIRED BY THE PLANS.

REPLACES FORMER DWG NO.6 | REVISED 5/14/2018 | SAMPLING POINT | FIGURE 206

BROWARD COUNTY PUBLIC WORKS DEPARTMENT — STANDARD DETAIL

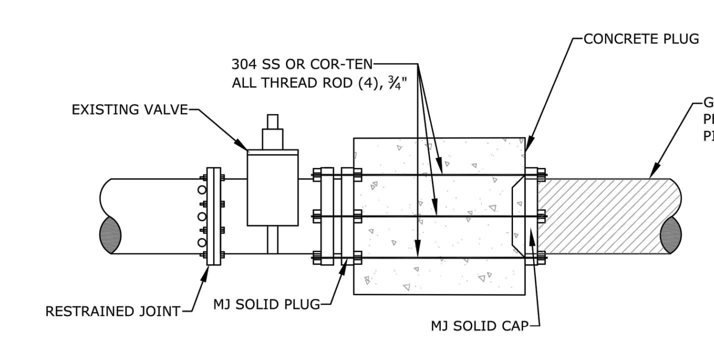

PROFILE

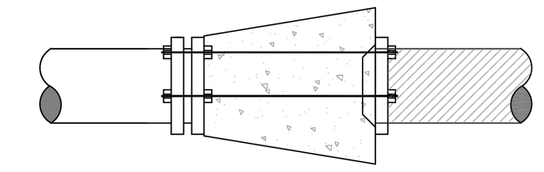

PLAN

AT EXISTING VALVE OR FITTING

SEQUENCE OF CONSTRUCTION

1. RESTRAIN VALVE OR FITTING. CONTRACTOR TO PROVIDE TEMPORARY RESTRAINT AS REQUIRED. (REQUIRES LINE SHUT DOWN)
2. REMOVE EXISTING PIPE FOR NEW CONCRETE PLUG.
3. INSTALL PLUG INTO BELL OF VALVE OR FITTING AND CAP ON END OF EXISTING PIPE TO BE ABANDONED.
4. INSTALL ALL THREAD RODS (3/4" DIA., MIN) AND POUR CONCRETE PLUG.

REPLACES FORMER DWG NO.143 | REVISED 5/14/2018 | PIPE TO BE ABANDONED (LIVE LINE 4" AND LARGER) | FIGURE 143

BROWARD COUNTY PUBLIC WORKS DEPARTMENT — STANDARD DETAIL

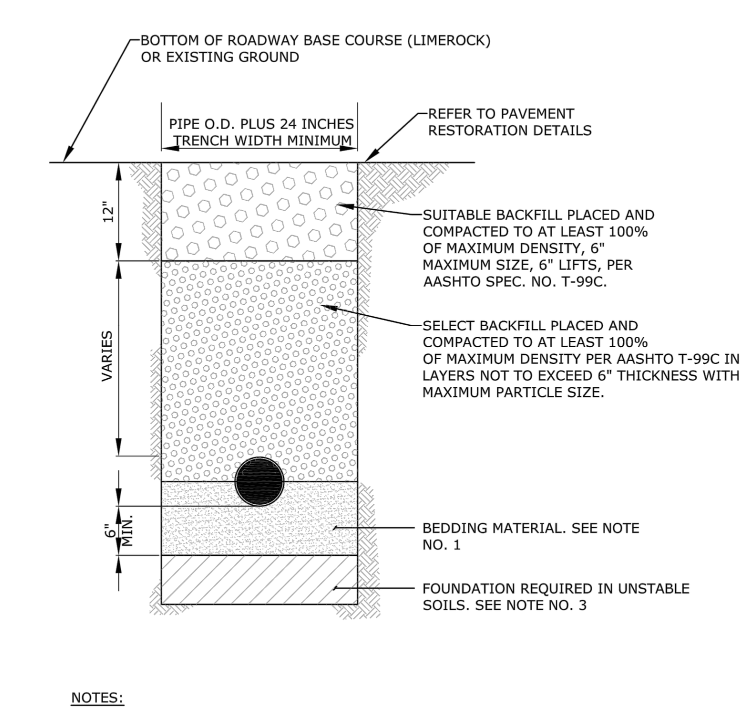

NOTES:

1. UNLESS OTHERWISE SPECIFIED, BEDDING MATERIAL SHALL CONSIST OF SELECT BACKFILL MATERIAL 2" MAXIMUM PARTICLE SIZE, COMPACTED TO AT LEAST 100% OF MAX. DENSITY, 6" LIFTS, PER AASHTO SPEC. NO. T-99C.
2. WHERE REQUIRED, SHEETING AND SHORING SHALL BE IN ACCORDANCE WITH OSHA REQUIREMENTS.
3. WHERE UNSTABLE SOILS ARE ENCOUNTERED, INCLUDING PEAT, MUCK OR OTHER ORGANIC SOILS, ELASTIC SILT AND CLAYS, A FOUNDATION IS REQUIRED AS DETERMINED BY THE ENGINEER OF RECORD.

REPLACES FORMER DWG NO.180 | REVISED 5/14/2018 | TYPICAL TRENCH BACKFILL | FIGURE 180

V:\1773\active\177311197\drawings\civil\177311197_details.dwg
2020/02/07 4:28 PM By: Robaina, Eduardo

Revision | By | Appd. | YY.MM.DD

Issued | By | Appd. | YY.MM.DD

Seal

DAVE CLARKE, P.E.
State of Florida - License No. 66553

Consultants

Stantec
901 Ponce de Leon Blvd. Suite 900
Coral Gables, Florida 33134
www.stantec.com

The Contractor shall verify and be responsible for all dimensions. DO NOT scale the drawing - any errors or omissions shall be reported to Stantec without delay.
The Copyrights to all designs and drawings are the property of Stantec. Reproduction or use for any purpose other than that authorized by Stantec is forbidden.

CITY OF HALLANDALE BEACH
12" WATER MAIN ALONG FOSTER RD
CITY OF HALLANDALE BEACH, FLORIDA

File Name: | ER Dwn. | DC Chkd. | LF Dsgn. | 19.07.31 YY.MM.DD

BROWARD COUNTY STANDARDS DETAILS 01

Project No. 177311197 | Scale NTS

Drawing No. | Sheet G-05 | Revision

BROWARD COUNTY
PUBLIC WORKS DEPARTMENT

WATER & WASTEWATER SERVICES
ENGINEERING DIVISION
2555 WEST COPANS ROAD
POMPANO BEACH, FL 33069

PHONE NO. 954-831-0745
FAX: 954-831-0928

STANDARD DETAIL

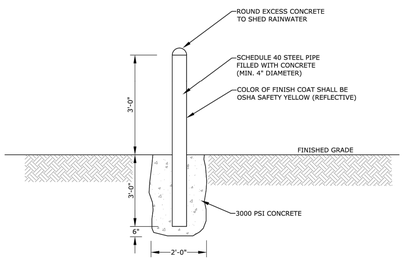

REPLACES FORMER DWG NO.194
REVISED 5/14/2018

BOLLARD

FIGURE 194

BROWARD COUNTY
PUBLIC WORKS DEPARTMENT

WATER & WASTEWATER SERVICES
ENGINEERING DIVISION
2555 WEST COPANS ROAD
POMPANO BEACH, FL 33069

PHONE NO. 954-831-0745
FAX: 954-831-0928

STANDARD DETAIL

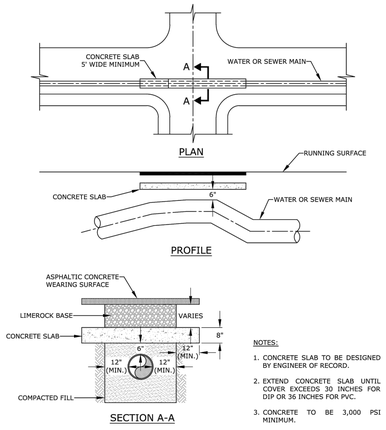

NOTES:

1. CONCRETE SLAB TO BE DESIGNED BY ENGINEER OF RECORD.
2. EXTEND CONCRETE SLAB UNTIL COVER EXCEEDS 30 INCHES FOR DIP OR 36 INCHES FOR PVC.
3. CONCRETE TO BE 3,000 PSI MINIMUM.
4. THIS DETAIL TO BE USED ONLY UPON WRITTEN APPROVAL FROM WWS TECHNICAL STANDARDS COMMITTEE.

REVISED 5/14/2018

CONCRETE SLAB OVER SHALLOW PIPELINES

FIGURE 195

BROWARD COUNTY
PUBLIC WORKS DEPARTMENT

WATER & WASTEWATER SERVICES
ENGINEERING DIVISION
2555 WEST COPANS ROAD
POMPANO BEACH, FL 33069

PHONE NO. 954-831-0745
FAX: 954-831-0928

STANDARD DETAIL

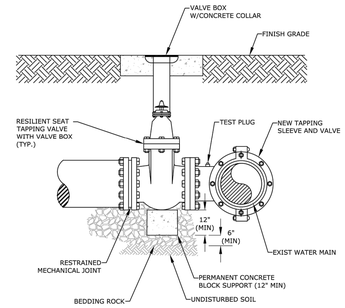

NOTES:

1. REFER TO WWS MINIMUM DESIGN AND CONSTRUCTION STANDARDS FOR MINIMUM REQUIREMENTS AND PRE-APPROVED MANUFACTURERS.
2. MAIN SHALL BE CLEANED BEFORE ATTACHING SLEEVE
3. SLEEVE AND VALVE SHALL BE PRESSURE TESTED BEFORE MAKING TAP. PRESSURE TEST AND TAP SHALL BE MADE IN PRESENCE OF AN AUTHORIZED COUNTY REPRESENTATIVE.
4. TAP SHALL BE MADE NO CLOSER THAN 18" FROM THE NEAREST JOINT.
5. CONCRETE BLOCK SHALL COMPLETELY SUPPORT TAPPING VALVE.
6. RESTRAINT JOINT REQUIREMENTS SHALL BE IN ACCORDANCE WITH WWS MINIMUM DESIGN AND CONSTRUCTION STANDARDS.

REVISED 5/14/2018

TAPPING SLEEVE AND VALVE INSTALLATION

FIGURE 196

BROWARD COUNTY
PUBLIC WORKS DEPARTMENT

WATER & WASTEWATER SERVICES
ENGINEERING DIVISION
2555 WEST COPANS ROAD
POMPANO BEACH, FL 33069

PHONE NO. 954-831-0745
FAX: 954-831-0928

STANDARD DETAIL

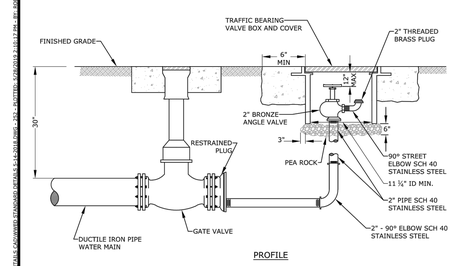

1. 2" TAP IN BOTTOM OF PLUG.
2. USE RESTRAINED JOINT PIPE.
3. IN GRASS AREA USE CONCRETE COLLARS, 6" THICK.

REPLACES FORMER DWG NO.5A
REVISED 5/14/2018

MANUAL BLOW OFF

FIGURE 252

BROWARD COUNTY
PUBLIC WORKS DEPARTMENT

WATER & WASTEWATER SERVICES
ENGINEERING DIVISION
2555 WEST COPANS ROAD
POMPANO BEACH, FL 33069

PHONE NO. 954-831-0745
FAX: 954-831-0928

STANDARD DETAIL

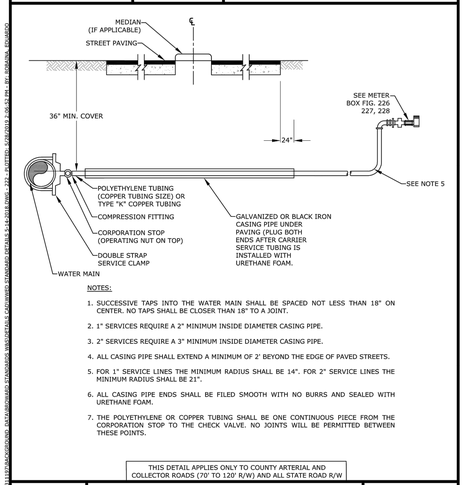

NOTES:

1. SUCCESSIVE TAPS INTO THE WATER MAIN SHALL BE SPACED NOT LESS THAN 18" ON CENTER. NO TAPS SHALL BE CLOSER THAN 18" TO A JOINT.
2. 1" SERVICES REQUIRE A 2" MINIMUM INSIDE DIAMETER CASING PIPE.
3. 2" SERVICES REQUIRE A 3" MINIMUM INSIDE DIAMETER CASING PIPE.
4. ALL CASING PIPE SHALL EXTEND A MINIMUM OF 2' BEYOND THE EDGE OF PAVED STREETS.
5. FOR 1" SERVICE LINES THE MINIMUM RADIUS SHALL BE 14". FOR 2" SERVICE LINES THE MINIMUM RADIUS SHALL BE 21".
6. ALL CASING PIPE ENDS SHALL BE FILED SMOOTH WITH NO BURRS AND SEALED WITH URETHANE FOAM.
7. THE POLYETHYLENE OR COPPER TUBING SHALL BE ONE CONTINUOUS PIECE FROM THE CORPORATION STOP TO THE CHECK VALVE. NO JOINTS WILL BE PERMITTED BETWEEN THESE POINTS.

THIS DETAIL APPLIES ONLY TO COUNTY ARTERIAL AND COLLECTOR ROADS (70' TO 120' R/W) AND ALL STATE ROAD R/W

REPLACES FORMER DWG NO.1B
REVISED 5/14/2018

TYPE 2 WATER SERVICE CONNECTION

FIGURE 222

BROWARD COUNTY
PUBLIC WORKS DEPARTMENT

WATER & WASTEWATER SERVICES
ENGINEERING DIVISION
2555 WEST COPANS ROAD
POMPANO BEACH, FL 33069

PHONE NO. 954-831-0745
FAX: 954-831-0928

STANDARD DETAIL

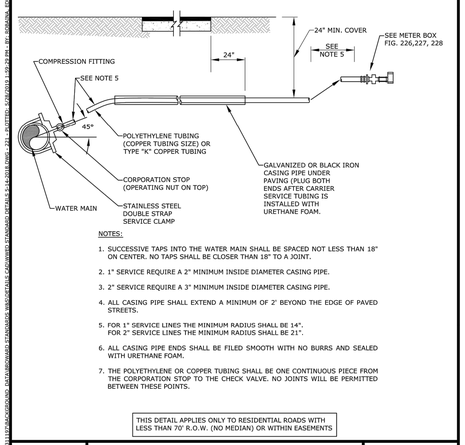

NOTES:

1. SUCCESSIVE TAPS INTO THE WATER MAIN SHALL BE SPACED NOT LESS THAN 18" ON CENTER. NO TAPS SHALL BE CLOSER THAN 18" TO A JOINT.
2. 1" SERVICE REQUIRE A 2" MINIMUM INSIDE DIAMETER CASING PIPE.
3. 2" SERVICE REQUIRE A 3" MINIMUM INSIDE DIAMETER CASING PIPE.
4. ALL CASING PIPE SHALL EXTEND A MINIMUM OF 2' BEYOND THE EDGE OF PAVED STREETS.
5. FOR 1" SERVICE LINES THE MINIMUM RADIUS SHALL BE 14". FOR 2" SERVICE LINES THE MINIMUM RADIUS SHALL BE 21".
6. ALL CASING PIPE ENDS SHALL BE FILED SMOOTH WITH NO BURRS AND SEALED WITH URETHANE FOAM.
7. THE POLYETHYLENE OR COPPER TUBING SHALL BE ONE CONTINUOUS PIECE FROM THE CORPORATION STOP TO THE CHECK VALVE. NO JOINTS WILL BE PERMITTED BETWEEN THESE POINTS.

THIS DETAIL APPLIES ONLY TO RESIDENTIAL ROADS WITH LESS THAN 70' R.O.W. (NO MEDIAN) OR WITHIN EASEMENTS

REPLACES FORMER DWG NO.1A
REVISED 5/14/2018

TYPE 1 WATER SERVICE CONNECTION

FIGURE 221

BROWARD COUNTY
PUBLIC WORKS DEPARTMENT

WATER & WASTEWATER SERVICES
ENGINEERING DIVISION
2555 WEST COPANS ROAD
POMPANO BEACH, FL 33069

PHONE NO. 954-831-0745
FAX: 954-831-0928

STANDARD DETAIL

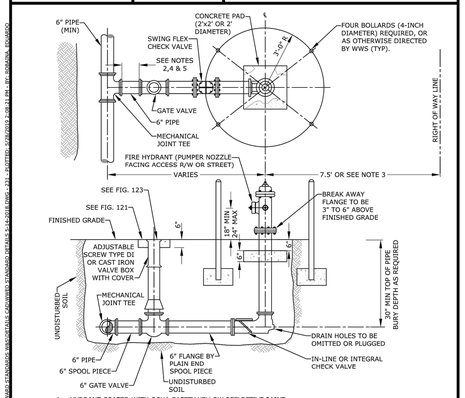

1. HYDRANT COATED WITH OSHA SAFETY YELLOW REFLECTIVE PAINT.
2. USE RESTRAINED JOINTS FOR THE ENTIRE ASSEMBLY SHOWN.
3. HYDRANT SET BACK SHALL CONFORM TO FDOT AND BCHCED REQUIREMENTS, WHERE APPLICABLE.
4. GATE VALVE IS NORMALLY LOCATED NEXT TO TEE.
5. IF DISTANCE FROM MAIN LINE TO FIRE HYDRANT IS GREATER THAN 20 FEET ANOTHER GATE GATE VALVE WILL BE PROVIDED CLOSE TO THE HYDRANT. THIS SECOND VALVE SHALL BE INSTALLED WITHIN 5' OF THE FIRE HYDRANT. CHECK VALVE SHALL BE WITHIN 3' OF FIRE HYDRANT UNLESS CHECK VALVE INTEGRAL TO HYDRANT ASSEMBLY.
6. HYDRANT FEED PIPE MAY BE TAPPED FOR A SERVICE LINE UPSTREAM OF THE ISOLATION GATE VALVE.
7. A BLUE RAISED REFLECTIVE PAVEMENT MARKER SHALL BE PLACED AT THE CENTER LINE OF THE OUTSIDE ROADWAY LANE TO IDENTIFY THE FIRE HYDRANT LOCATION.

REPLACES FORMER DWG NO.8
REVISED 5/14/2018

FIRE HYDRANT INSTALLATION

FIGURE 231

BROWARD COUNTY
PUBLIC WORKS DEPARTMENT

WATER & WASTEWATER SERVICES
ENGINEERING DIVISION
2555 WEST COPANS ROAD
POMPANO BEACH, FL 33069

PHONE NO. 954-831-0745
FAX: 954-831-0928

STANDARD DETAIL

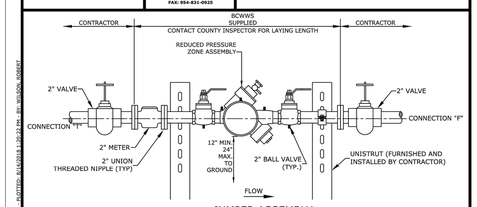

JUMPER ASSEMBLY

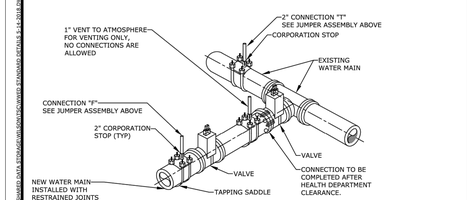

NOTES:

1. A BCWWS SUPPLIED FIRE HYDRANT BACKFLOW METER WITH RPZ MAY BE USED IN LIEU OF THE JUMPER ASSEMBLY.
2. SEE DETAIL 205B FOR ADDITIONAL REQUIREMENTS.

REPLACES FORMER DWG NO.7
REVISED 5/14/2018

FILLING AND FLUSHING JUMPER CONNECTION

FIGURE 205A

Revision	By	Appd.	YY.MM.DD

Issued	By	Appd.	YY.MM.DD

Seal

DAVE CLARKE, P.E.
State of Florida - License No. 66553

Consultants

Stantec
901 Ponce de Leon Blvd. Suite 900
Coral Gables, Florida 33134
www.stantec.com

The Contractor shall verify and be responsible for all dimensions. DO NOT scale the drawing - any errors or omissions shall be reported to Stantec without delay.
The Copyrights to all designs and drawings are the property of Stantec. Reproduction or use for any purpose other than that authorized by Stantec is forbidden.

CITY OF HALLANDALE BEACH
12" WATER MAIN ALONG FOSTER RD
CITY OF HALLANDALE BEACH, FLORIDA

File Name:	ER	DC	LF	19.07.31
	Dwn.	Chkd.	Dsgn.	YY.MM.DD

BROWARD COUNTY STANDARDS DETAILS 02

Project No.	Scale	
177311197	NTS	
Drawing No.	Sheet	Revision
	G-06	

V:\1773\active\177311197\drawings\civil\177311197_details.dwg
2020/02/07 4:28 PM By: Robaina, Eduardo

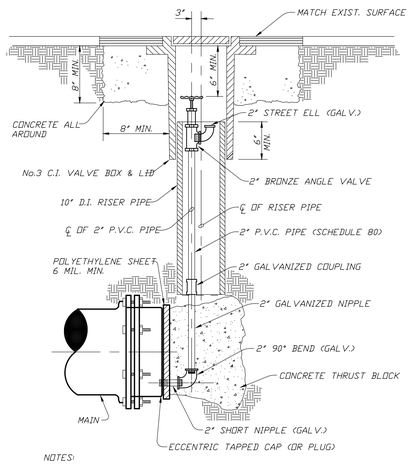

NOTES:

1. AIR RELEASE RISERS AND VALVE BOX RISERS SHALL BE PLACED AND MAINTAINED IN VERTICAL POSITION.
2. THREADS TO BE COATED AFTER INSTALLATION WITH BITUMASTIC COATING (METALLIC ONLY)

TYPICAL FLUSHING VALVE OUTLET (FVO)

N.T.S.

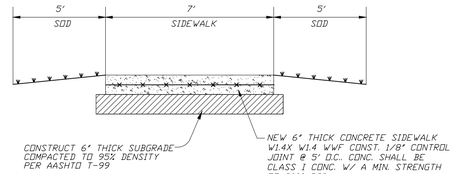

PROP. 6" SIDEWALK

N.T.S.

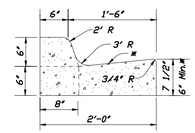

* WHEN USED ON HIGH SIDE OF ROADWAYS, THE CROSS SLOPE OF THE GUTTER SHALL MATCH THE CROSS SLOPE OF THE ADJACENT PAVEMENT. THE THICKNESS OF THE LIP SHALL BE 6", UNLESS OTHERWISE SHOWN ON PLANS.

NOTES:

1. PROVIDE 1/8" TO 1/4" SAWCUT JOINTS AT 10' CENTERS (MAX.).

TYPE "F" CURB & GUTTER

N.T.S.

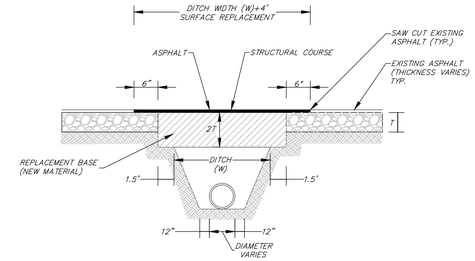

NOTES:

1. BASE MATERIAL OVER DITCH SHALL BE TWICE THE THICKNESS OF THE ORIGINAL.
2. BASE MATERIAL SHALL BE PLACED IN 6" MAXIMUM LAYERS (LOOSE MEASUREMENT) AND EACH LAYER THOROUGHLY ROLLED OR TAMPED TO 98% OF MAXIMUM DENSITY, PER AASHTO T-180.
3. ASPHALT CONCRETE PAVEMENT JOINTS SHALL BE MECHANICALLY SAW CUT.
4. SURFACE MATERIAL SHALL BE CONSISTENT WITH THE SURROUNDING SURFACE MATERIAL.
5. BASE MATERIAL SHALL HAVE A MINIMUM CARBONATE OF 70%.
6. SUB GRADE MATERIAL SHALL BE GRANULAR AND ANGULAR AND SHALL HAVE A MINIMUM LBR OF 40.
7. IF THE DITCH IS FILLED TEMPORARILY, IT SHALL BE COVERED WITH A 2" THICK ASPHALT CONCRETE PATCH TO KEEP THE FILL MATERIAL FROM RAVELING, UNTIL REPLACED WITH A PERMANENT PATCH.
8. FOR STATE ROADS REFER TO FDOT SPECIFICATIONS AND REQUIREMENTS.

T = EXISTING LIMEROCK BASE THICKNESS.

RESTORATION OF ROADWAY

N.T.S.

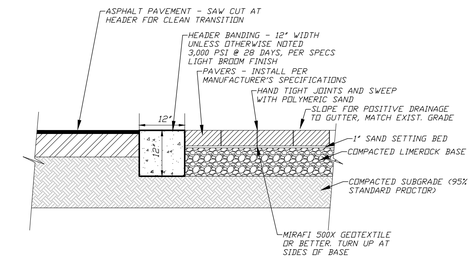

NOTES:

1. CONTRACTOR TO PROVIDE SHOP DRAWINGS AND COLOR SAMPLES FOR OWNER'S REP APPROVAL PRIOR TO CONSTRUCTION.
2. PAVERS SHALL BE SWEPT WITH TECHNISEAL POLYMERIC SAND.
3. CONTRACTOR TO MATCH EXISTING GRADING.

TYPICAL PAVERS

N.T.S.

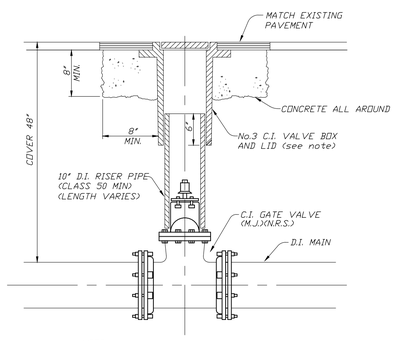

NOTE:
USE No.3 C.I. VALVE BOX FOR ALL MAIN LINE VALVES.

GATE VALVE SMALLER THAN 16

N.T.S.

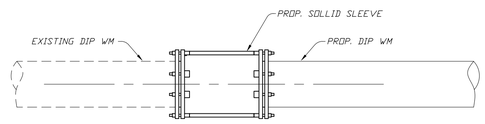

SOLID SLEEVE

N.T.S.

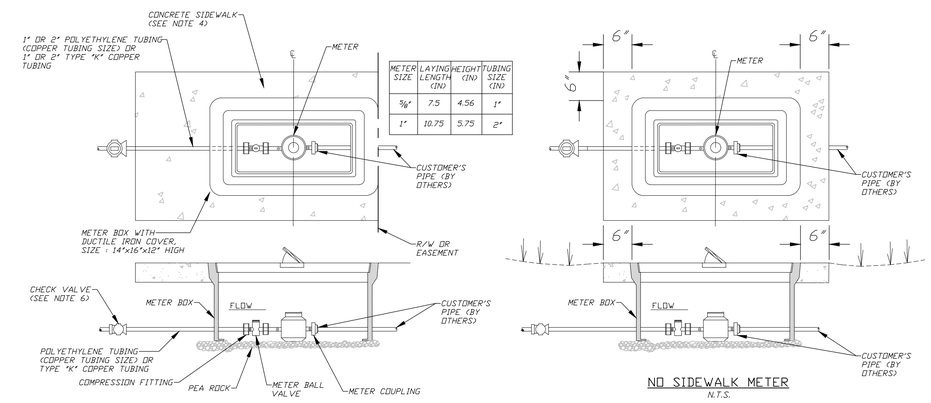

METER SIZE	LAYING LENGTH (IN)	HEIGHT (IN)	TUBING SIZE (IN)
5/8"	7.5	4.56	1"
1"	10.75	5.75	2"

NO SIDEWALK METER
N.T.S.

NOTES:

1. ALL STRUCTURES TO BE TRAFFIC BEARING TYPE.
2. WWS RESPONSIBILITY ENDS AT THE CUSTOMER'S SIDE OF METER COUPLING.
3. CURVE IN SERVICE LINE SHALL BE AS CLOSE TO METER BOX AS PRACTICAL, WITH A MINIMUM RADIUS OF BE 14' FOR 1" TUBING AND 21' FOR 2" TUBING.
4. ALL METERS WILL BE SUPPLIED AND INSTALLED BY WWS. METER HAS IRON PIPE THREAD MALE CONNECTION ON EACH END.
5. WHEN SIDEWALKS ARE PRESENT, OR PLANNED FOR IN THE R/W, THE BACK EDGE OF THE METER BOX SHALL LINE UP WITH THE BACK EDGE OF THE SIDEWALK.
6. METER SHALL BE CENTERED IN BOX DIRECTLY UNDER THE ACCESS LID.
7. THE CHECK VALVE IS TO BE INSTALLED 5 FEET BEFORE THE METER BALL VALVE.
8. WHEN THERE ARE NO SIDEWALKS, CONSTRUCT 6' WIDE x 6' THICK CONCRETE COLLAR AT GRADE.

WATER METER INSTALLATION FOR 5/8" AND 1" METER DETAIL 226

N.T.S.

V:\1773\active\177311197\drawings\civil\177311197_details.dwg
2020/02/07 4:28 PM By: Robaina, Eduardo

Revision	By	Appd.	YY.MM.DD

Issued	By	Appd.	YY.MM.DD

Seal

DAVE CLARKE, P.E.
State of Florida - License No. 66553

Consultants

Stantec
901 Ponce de Leon Blvd. Suite 900
Coral Gables, Florida 33134
www.stantec.com

The Contractor shall verify and be responsible for all dimensions. DO NOT scale the drawing - any errors or omissions shall be reported to Stantec without delay.
The Copyrights to all designs and drawings are the property of Stantec. Reproduction or use for any purpose other than that authorized by Stantec is forbidden.

CITY OF HALLANDALE BEACH
12" WATER MAIN ALONG FOSTER RD
CITY OF HALLANDALE BEACH, FLORIDA

File Name:	ER	DC	LF	19.07.31
	Dwn.	Chkd.	Dsgn.	YY.MM.DD

CIVIL DETAILS

Project No.	Scale	
177311197	NTS	
Drawing No.	Sheet	Revision
	G-07	

EXISTING WATER METERS (TO BE REMOVED)

METER	TYPE	STATION	OFFSET	BASELINE	NOTES
1	SINGLE	10+50.37	23.91'LT	FOSTER RD	
2	SINGLE	10+71.05	23.95'LT	FOSTER RD	
3	SINGLE	11+07.22	25.96'LT	FOSTER RD	UNABLE TO OPEN WATER METER
4	SINGLE	10+06.96	23.22'LT	FOSTER RD	WATER METER EMPTY
5	SINGLE	11+60.23	26.89'LT	FOSTER RD	
6	SINGLE	12+61.61	20.68'LT	FOSTER RD	UNABLE TO OPEN WATER METER
7	SINGLE	12+44.06	19.10'RT	FOSTER RD	
8	SINGLE	13+18.20	28.90'LT	FOSTER RD	UNABLE TO OPEN WATER METER
9	SINGLE	15+59.80	21.09'LT	FOSTER RD	
10	SINGLE	15+53.60	19.66'RT	FOSTER RD	
11	SINGLE	16+05.86	22.15'LT	FOSTER RD	
12	SINGLE	16+52.19	21.48'LT	FOSTER RD	
13	SINGLE	16+58.39	21.26'LT	FOSTER RD	
14	SINGLE	16+60.36	29.33'LT	FOSTER RD	MISSING FROM SURVEY, FULL OF WATER
15	SINGLE	18+50.36	18.66'LT	FOSTER RD	WATER METER EMPTY
16	SINGLE	18+54.40	23.28'RT	FOSTER RD	
17	SINGLE	20+60.47	24.59'LT	FOSTER RD	UNABLE TO OPEN WATER METER
18	SINGLE	22+26.41	19.72'RT	FOSTER RD	
19	SINGLE	22+37.40	19.93'RT	FOSTER RD	
20	SINGLE	23+34.22	19.48'RT	FOSTER RD	
21	SINGLE	23+72.66	19.47'RT	FOSTER RD	UNABLE TO OPEN WATER METER
22	SINGLE	23+47.42	22.20'LT	FOSTER RD	MISSING FROM SURVEY, UNABLE TO OPEN
23	SINGLE	27+98.11	55.67'RT	FOSTER RD	
24	SINGLE	30+99.00	30.00'LT	FOSTER RD	MISSING FROM SURVEY, EMPTY
25	SINGLE	31+00.00	30.00'LT	FOSTER RD	MISSING FROM SURVEY, EMPTY
26	SINGLE	31+01.00	30.00'LT	FOSTER RD	MISSING FROM SURVEY, EMPTY
27	SINGLE	31+46.50	22.87'RT	FOSTER RD	
28	SINGLE	31+79.26	17.34'RT	FOSTER RD	
29	SINGLE	31+80.26	17.34'RT	FOSTER RD	
30	SINGLE	31+92.50	24.27'RT	FOSTER RD	
31	SINGLE	32+04.59	23.83'RT	FOSTER RD	
32	SINGLE	32+43.38	22.87'RT	FOSTER RD	
33	SINGLE	32+44.38	22.87'RT	FOSTER RD	
34	SINGLE	34+76.30	23.72'RT	FOSTER RD	
35	SINGLE	36+53.16	24.18'LT	FOSTER RD	UNABLE TO OPEN WATER METER
36	SINGLE	36+75.01	23.35'LT	FOSTER RD	
37	SINGLE	36+76.01	23.35'LT	FOSTER RD	

METER	TYPE	STATION	OFFSET	BASELINE	NOTES
38	SINGLE	37+33.94	15.07'LT	FOSTER RD	
39	SINGLE	37+75.54	17.59'LT	FOSTER RD	
40	SINGLE	38+92.02	13.91'LT	FOSTER RD	
41	SINGLE	38+93.02	13.91'LT	FOSTER RD	
42	SINGLE	39+21.89	17.79'RT	FOSTER RD	
43	SINGLE	39+83.88	25.79'RT	FOSTER RD	
44	SINGLE	41+38.70	21.86'LT	FOSTER RD	
45	SINGLE	42+20.69	22.60'LT	FOSTER RD	WATER METER EMPTY
46	SINGLE	59+92.28	25.37'LT	NW 9TH ST	UNABLE TO OPEN WATER METER
47	SINGLE	60+28.28	24.33'LT	NW 9TH ST	UNABLE TO OPEN WATER METER
48	SINGLE	60+51.05	26.96'LT	NW 9TH ST	
49	SINGLE	61+03.39	26.42'LT	NW 9TH ST	
50	SINGLE	61+04.39	26.42'LT	NW 9TH ST	
51	SINGLE	61+06.32	26.31'LT	NW 9TH ST	
52	SINGLE	61+07.32	26.31'LT	NW 9TH ST	
53	SINGLE	61+10.13	26.36'LT	NW 9TH ST	
54	SINGLE	61+11.13	26.36'LT	NW 9TH ST	
55	SINGLE	61+13.05	25.43'LT	NW 9TH ST	WATER METER EMPTY
56	SINGLE	61+14.05	25.43'LT	NW 9TH ST	WATER METER EMPTY
57	SINGLE	62+49.42	21.26'LT	NW 9TH ST	WATER METER EMPTY
58	SINGLE	63+20.32	25.00'LT	NW 9TH ST	MISSING FROM SURVEY, EMPTY
59	SINGLE	63+59.68	5.79'RT	NW 9TH ST	
60	SINGLE	63+83.63	5.08'RT	NW 9TH ST	
61	SINGLE	63+84.63	5.08'RT	NW 9TH ST	
62	SINGLE	63+86.51	5.19'RT	NW 9TH ST	
63	SINGLE	63+87.51	5.19'RT	NW 9TH ST	
64	SINGLE	63+90.61	23.97'LT	NW 9TH ST	
65	SINGLE	64+27.01	23.45'LT	NW 9TH ST	
66	SINGLE	64+74.12	25.00'LT	NW 9TH ST	MISSING FROM SURVEY, EMPTY
67	SINGLE	64+96.08	7.12'RT	NW 9TH ST	
68	SINGLE	64+97.08	7.12'RT	NW 9TH ST	
69	SINGLE	64+98.16	7.23'RT	NW 9TH ST	
70	SINGLE	64+99.16	7.23'RT	NW 9TH ST	
71	SINGLE	65+03.94	24.04'LT	NW 9TH ST	
72	SINGLE	65+20.01	6.10'RT	NW 9TH ST	
73	SINGLE	65+23.49	6.04'RT	NW 9TH ST	

Revision | By | Appd. | YY.MM.DD

Issued | By | Appd. | YY.MM.DD

Seal

DAVE CLARKE, P.E.
State of Florida - License No. 66553

Consultants

Stantec
901 Ponce de Leon Blvd. Suite 900
Coral Gables, Florida 33134
www.stantec.com

The Contractor shall verify and be responsible for all dimensions. DO NOT scale the drawing - any errors or omissions shall be reported to Stantec without delay.
The Copyrights to all designs and drawings are the property of Stantec. Reproduction or use for any purpose other than that authorized by Stantec is forbidden.

CITY OF HALLANDALE BEACH
12" WATER MAIN ALONG FOSTER RD
CITY OF HALLANDALE BEACH, FLORIDA

File Name: | ER Dwn. | DC Chkd. | LF Dsgn. | 19.07.31 YY.MM.DD

EXISTING WATER METERS

Project No. 177311197 | Scale NTS
Drawing No. | Sheet G-08 | Revision

V:\1773\active\177311197\drawings\civil\177311197_tables.dwg
2020/02/07 4:29 PM By: Robaina, Eduardo

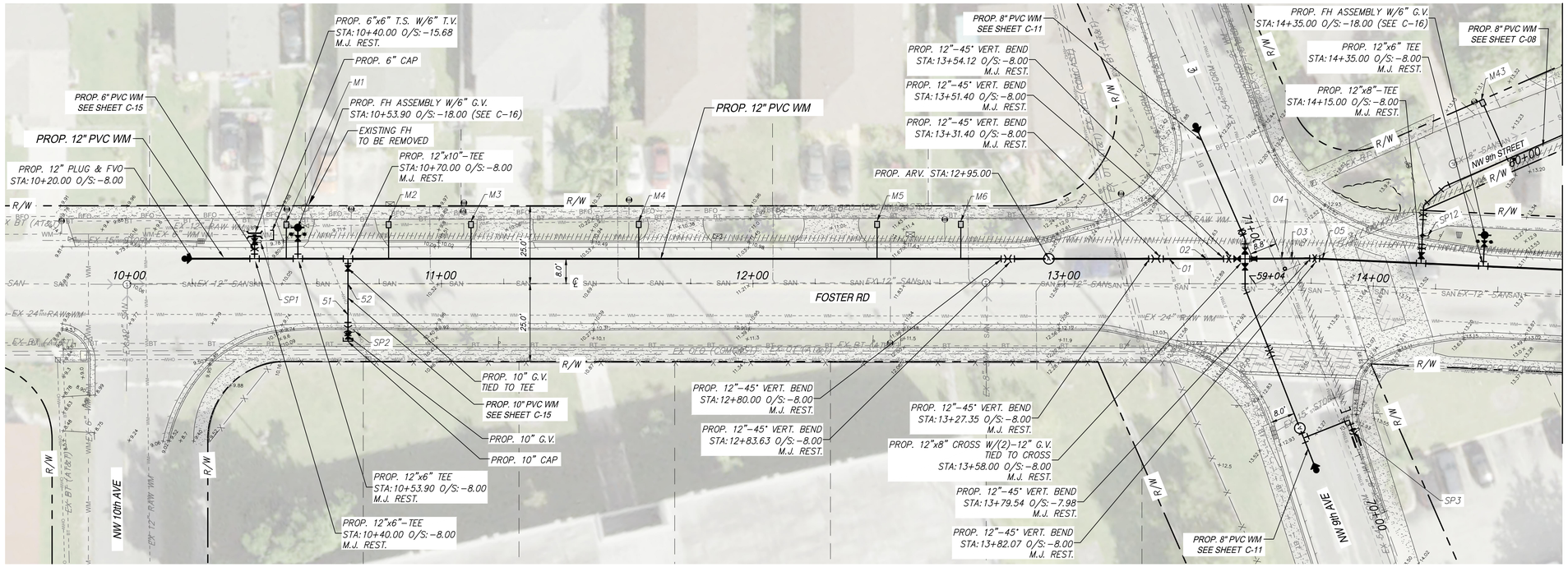

Scale: 1" = 20'
Reduced Scale: 1" = 40'

0' 20' 40'

NOTES:

1. LOCATIONS OF EXISTING UNDERGROUND UTILITIES SHOWN HAVE BEEN PREPARED FROM THE MOST RELIABLE INFORMATION AVAILABLE TO THE ENGINEER. CONTRACTOR TO VERIFY DIAMETER AND ELEVATION OF ALL EXISTING PIPES PRIOR TO COMMENCEMENT OF WORK.
2. UNLESS OTHERWISE INDICATED, ELEVATIONS SHOWN FOR EXISTING UTILITIES ARE TOP OF PIPE ELEVATIONS AS DETERMINED BY SUBSURFACE UTILITY ENGINEERING (SUE) SURVEY OR AS-BUILT DRAWINGS.
3. ALL DAMAGED SIDEWALKS AND CURBS SHALL BE REPLACED PER BROWARD COUNTY MINIMUM STANDARDS.

SCALE HORIZONTAL 1"= 20'
SCALE VERTICAL 1"= 2'

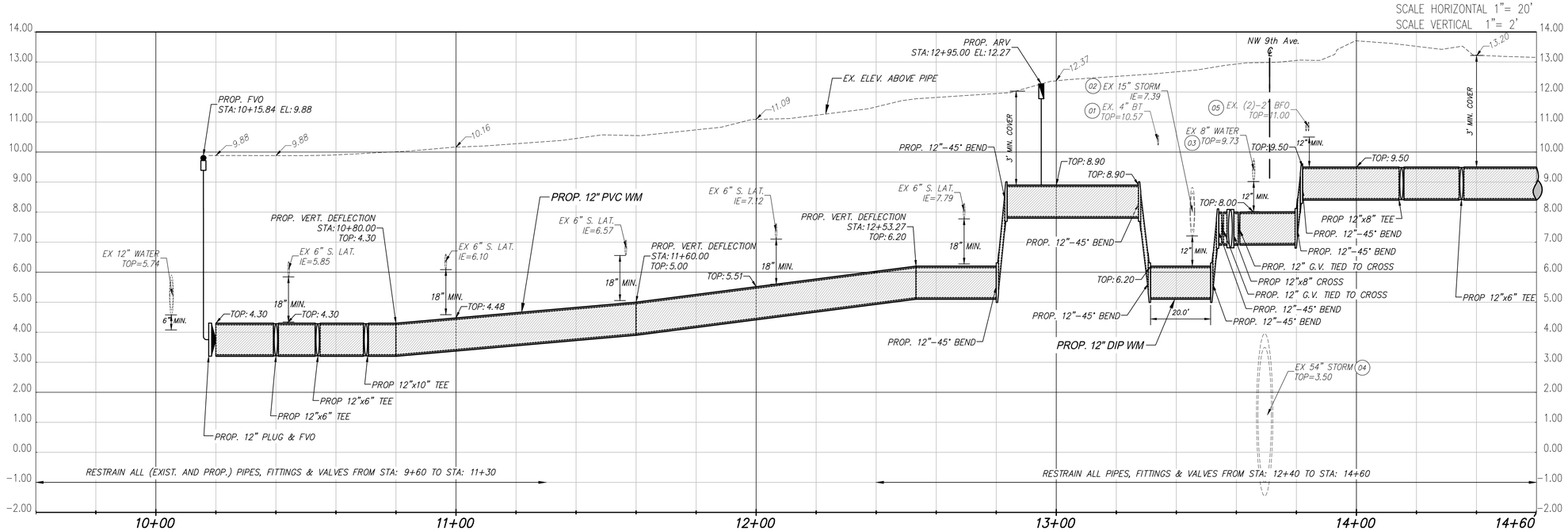

Revision	By	Appd.	YY.MM.DD

Issued	By	Appd.	YY.MM.DD

Seal

DAVE CLARKE, P.E.
State of Florida - License No. 66553

Consultants

Stantec
901 Ponce de Leon Blvd. Suite 900
Coral Gables, Florida 33134
www.stantec.com

The Contractor shall verify and be responsible for all dimensions. DO NOT scale the drawing - any errors or omissions shall be reported to Stantec without delay.
The Copyrights to all designs and drawings are the property of Stantec. Reproduction or use for any purpose other than that authorized by Stantec is forbidden.

CITY OF HALLANDALE BEACH
12" WATER MAIN ALONG FOSTER RD
CITY OF HALLANDALE BEACH, FLORIDA

File Name:	ER	DC	LF	19.07.31
	Dwn.	Chkd.	Dsgn.	YY.MM.DD

PLAN & PROFILE

Project No.	Scale	
177311197	AS NOTED	
Drawing No.	Sheet	Revision
	C-01	

V:\1773\active\177311197\drawing\civil\177311197_plan & Profile.dwg
2020/02/07 4:30 PM By: Robaina, Eduardo

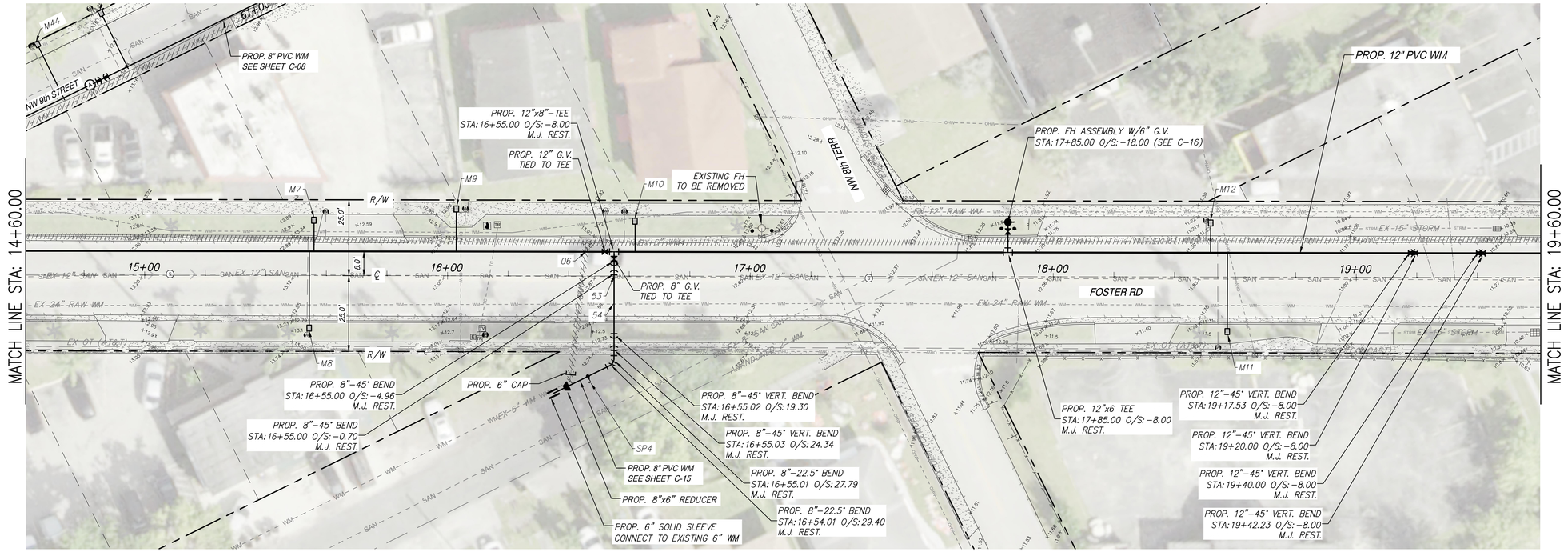

Scale: 1" = 20'
Reduced Scale: 1" = 40'
0' 20' 40'

NOTES:

1. LOCATIONS OF EXISTING UNDERGROUND UTILITIES SHOWN HAVE BEEN PREPARED FROM THE MOST RELIABLE INFORMATION AVAILABLE TO THE ENGINEER. CONTRACTOR TO VERIFY DIAMETER AND ELEVATION OF ALL EXISTING PIPES PRIOR TO COMMENCEMENT OF WORK.
2. UNLESS OTHERWISE INDICATED, ELEVATIONS SHOWN FOR EXISTING UTILITIES ARE TOP OF PIPE ELEVATIONS AS DETERMINED BY SUBSURFACE UTILITY ENGINEERING (SUE) SURVEY OR AS-BUILT DRAWINGS.
3. ALL DAMAGED SIDEWALKS AND CURBS SHALL BE REPLACED PER BROWARD COUNTY MINIMUM STANDARDS.

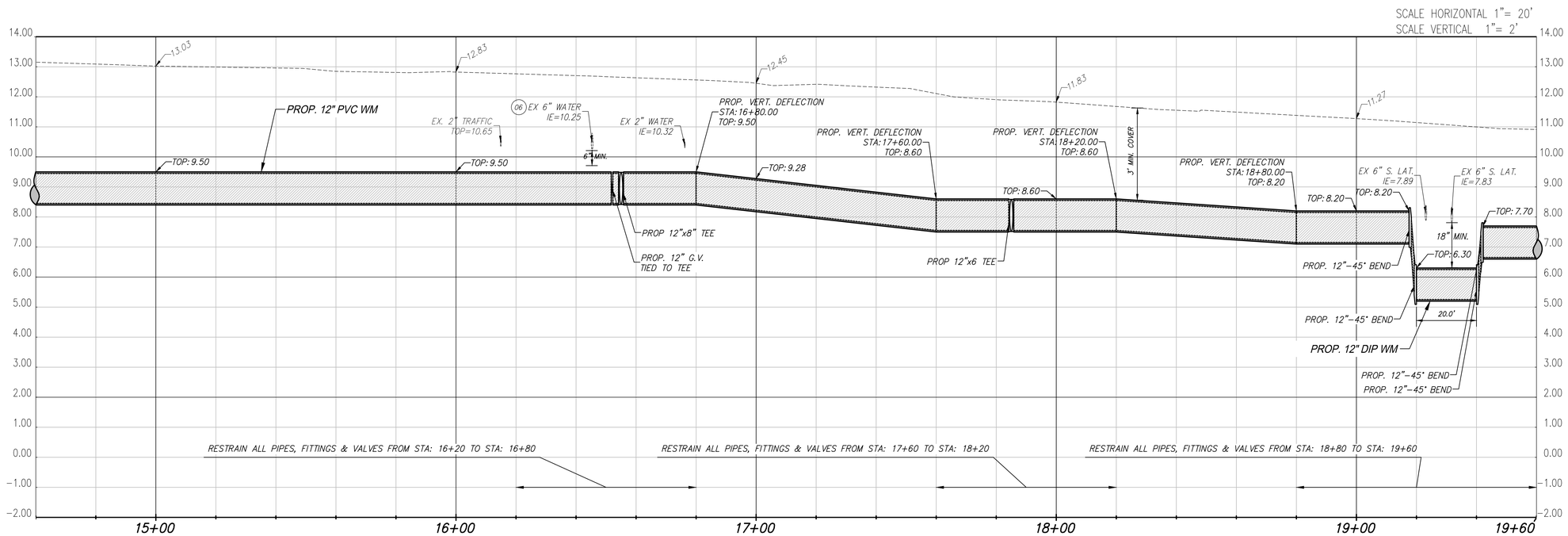

Revision	By	Appd.	YY.MM.DD

Issued	By	Appd.	YY.MM.DD

Seal

DAVE CLARKE, P.E.
State of Florida - License No. 66553

Consultants

Stantec
901 Ponce de Leon Blvd. Suite 900
Coral Gables, Florida 33134
www.stantec.com

The Contractor shall verify and be responsible for all dimensions. DO NOT scale the drawing - any errors or omissions shall be reported to Stantec without delay.
The Copyrights to all designs and drawings are the property of Stantec. Reproduction or use for any purpose other than that authorized by Stantec is forbidden.

CITY OF HALLANDALE BEACH
12" WATER MAIN ALONG FOSTER RD
CITY OF HALLANDALE BEACH, FLORIDA

File Name:	ER	DC	LF	19.07.31
	Dwn.	Chkd.	Dsgn.	YY.MM.DD

PLAN & PROFILE

Project No.	Scale	
177311197	AS NOTED	
Drawing No.	Sheet	Revision
	C-02	

V:\1773\active\177311197\drawings\civil\177311197_plan & Profile.dwg
2020/02/07 4:30 PM By: Robins, Eduardo

FOR CONTINUATION SEE SHEET C-10

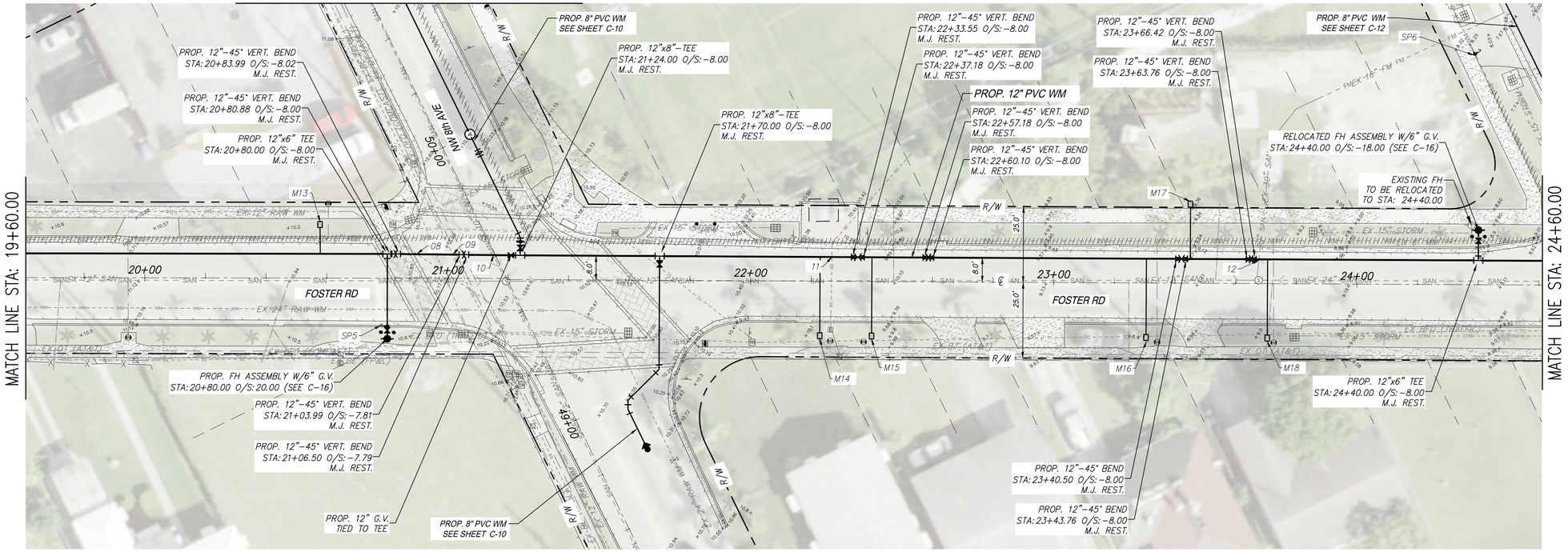

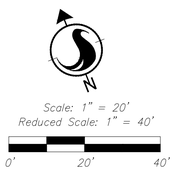

NOTES:

1. LOCATIONS OF EXISTING UNDERGROUND UTILITIES SHOWN HAVE BEEN PREPARED FROM THE MOST RELIABLE INFORMATION AVAILABLE TO THE ENGINEER. CONTRACTOR TO VERIFY DIAMETER AND ELEVATION OF ALL EXISTING PIPES PRIOR TO COMMENCEMENT OF WORK.
2. UNLESS OTHERWISE INDICATED, ELEVATIONS SHOWN FOR EXISTING UTILITIES ARE TOP OF PIPE ELEVATIONS AS DETERMINED BY SUBSURFACE UTILITY ENGINEERING (SUE) SURVEY OR AS-BUILT DRAWINGS.
3. ALL DAMAGED SIDEWALKS AND CURBS SHALL BE REPLACED PER BROWARD COUNTY MINIMUM STANDARDS.

SCALE HORIZONTAL 1"= 20'
SCALE VERTICAL 1"= 2'

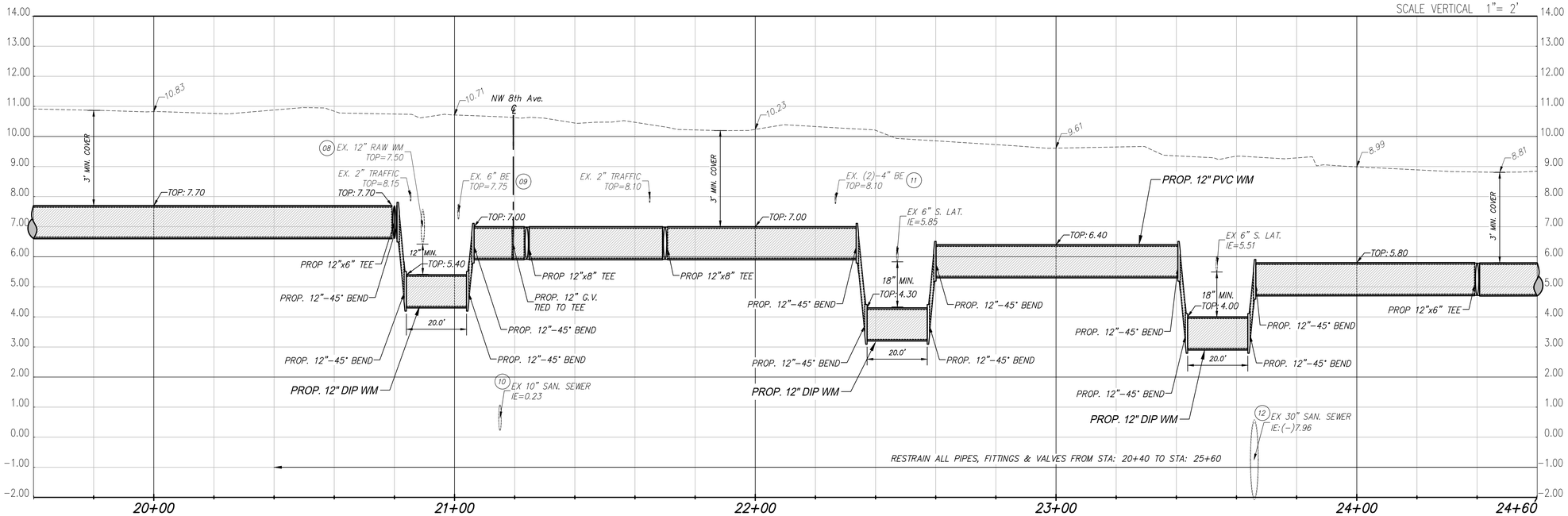

Revision	By	Appd.	YY.MM.DD

Issued	By	Appd.	YY.MM.DD

Seal

DAVE CLARKE, P.E.
State of Florida - License No. 66553

Consultants

Stantec
901 Ponce de Leon Blvd. Suite 900
Coral Gables, Florida 33134
www.stantec.com

The Contractor shall verify and be responsible for all dimensions. DO NOT scale the drawing - any errors or omissions shall be reported to Stantec without delay.
The Copyrights to all designs and drawings are the property of Stantec. Reproduction or use for any purpose other than that authorized by Stantec is forbidden.

CITY OF HALLANDALE BEACH
12" WATER MAIN ALONG FOSTER RD
CITY OF HALLANDALE BEACH, FLORIDA

File Name:	ER	DC	LF	19.07.31
	Dwn.	Chkd.	Dsgn.	YY.MM.DD

PLAN & PROFILE

Project No.	Scale	
177311197	AS NOTED	
Drawing No.	Sheet	Revision
	C-03	

V:\1773\active\177311197\drawings\civil\177311197_plan & Profile.dwg
2020/02/07 4:31 PM By: Robaina, Eduardo

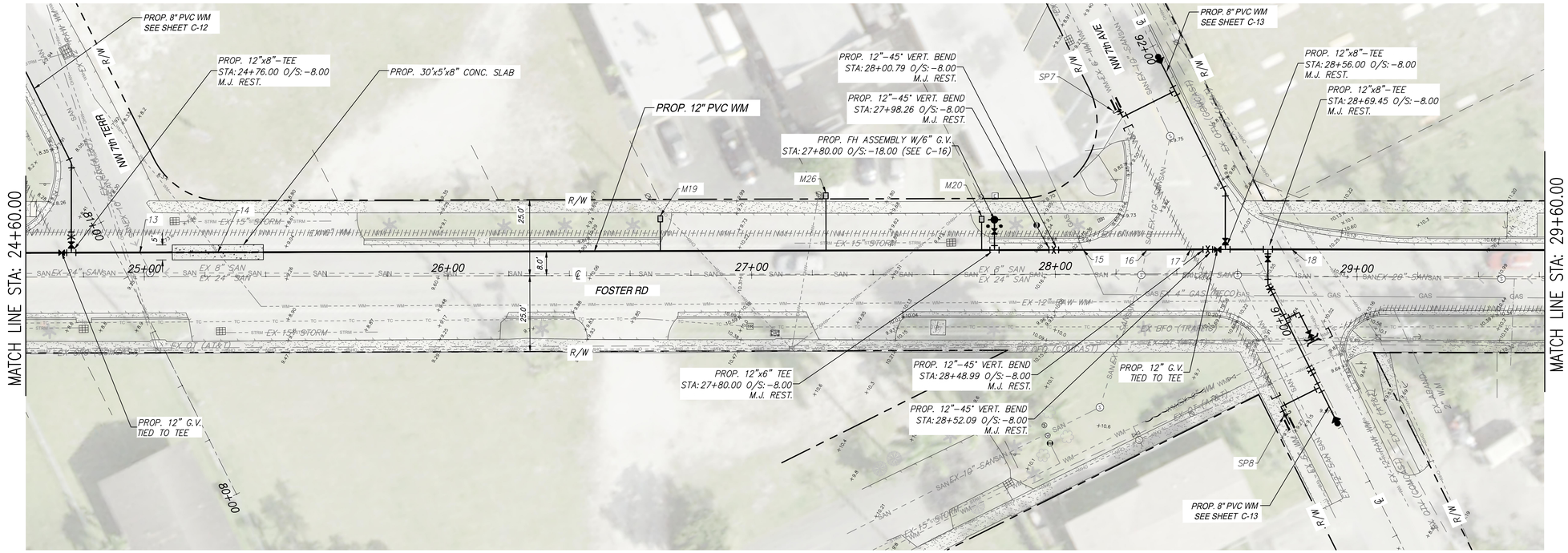

Scale: 1" = 20'
Reduced Scale: 1" = 40'
0' 20' 40'

NOTES:

1. LOCATIONS OF EXISTING UNDERGROUND UTILITIES SHOWN HAVE BEEN PREPARED FROM THE MOST RELIABLE INFORMATION AVAILABLE TO THE ENGINEER. CONTRACTOR TO VERIFY DIAMETER AND ELEVATION OF ALL EXISTING PIPES PRIOR TO COMMENCEMENT OF WORK.
2. UNLESS OTHERWISE INDICATED, ELEVATIONS SHOWN FOR EXISTING UTILITIES ARE TOP OF PIPE ELEVATIONS AS DETERMINED BY SUBSURFACE UTILITY ENGINEERING (SUE) SURVEY OR AS-BUILT DRAWINGS.
3. ALL DAMAGED SIDEWALKS AND CURBS SHALL BE REPLACED PER BROWARD COUNTY MINIMUM STANDARDS.

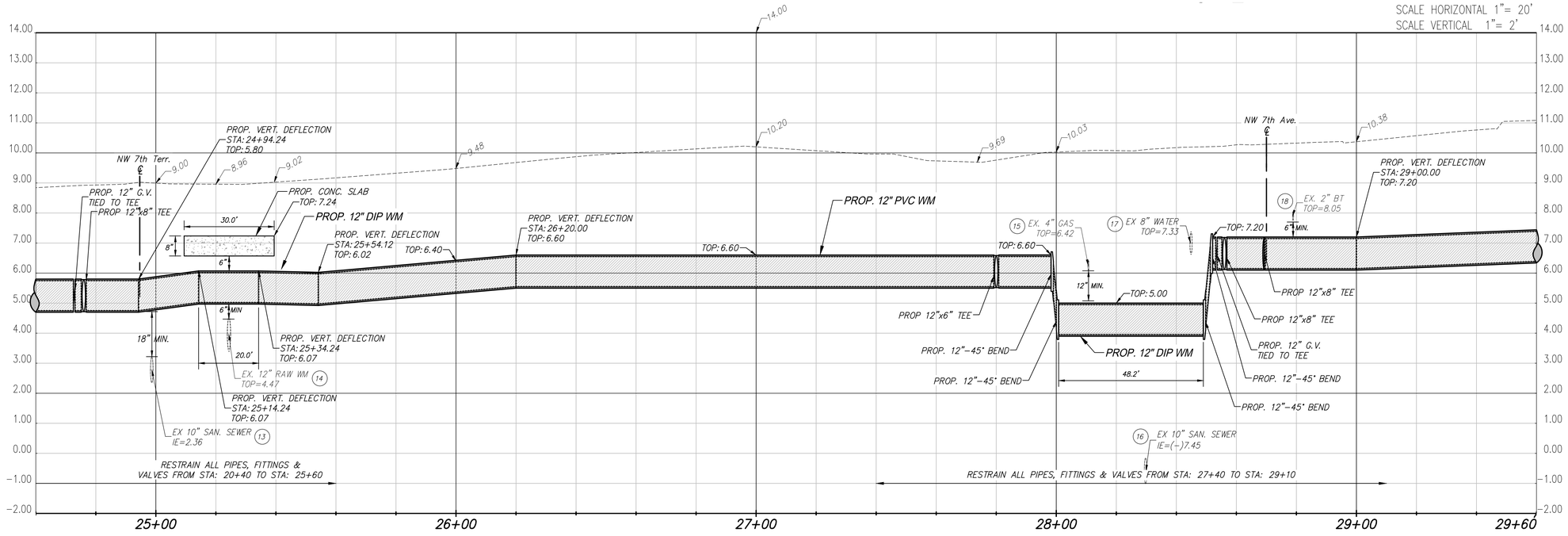

Revision	By	Appd.	YY.MM.DD

Issued	By	Appd.	YY.MM.DD

Seal

DAVE CLARKE, P.E.
State of Florida - License No. 66553

Consultants

Stantec
901 Ponce de Leon Blvd. Suite 900
Coral Gables, Florida 33134
www.stantec.com

The Contractor shall verify and be responsible for all dimensions. DO NOT scale the drawing - any errors or omissions shall be reported to Stantec without delay.
The Copyrights to all designs and drawings are the property of Stantec. Reproduction or use for any purpose other than that authorized by Stantec is forbidden.

CITY OF HALLANDALE BEACH
12" WATER MAIN ALONG FOSTER RD
CITY OF HALLANDALE BEACH, FLORIDA

File Name:	ER	DC	LF	19.07.31
	Dwn.	Chkd.	Dsgn.	YY.MM.DD

PLAN & PROFILE

Project No.	Scale	
177311197	AS NOTED	
Drawing No.	Sheet	Revision
	C-04	

V:\1773\active\177311197\drawings\civil\177311197_plan & Profile.dwg
2020/02/07 4:31 PM By: Robalino, Eduardo

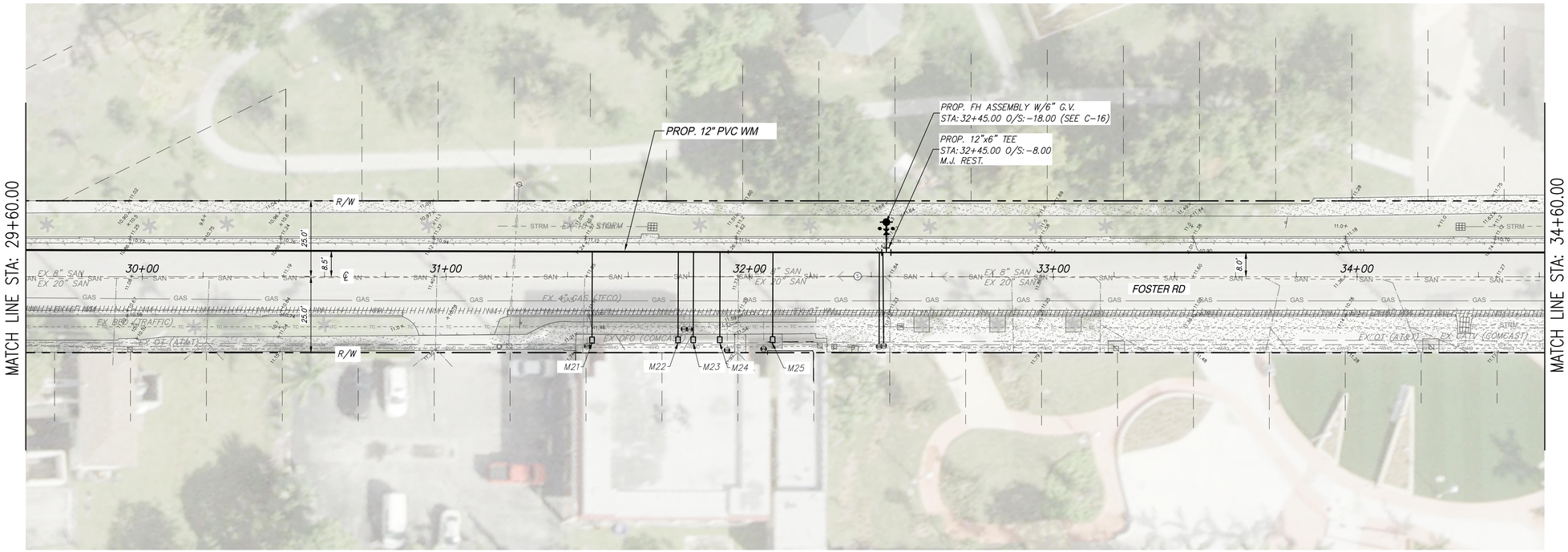

Scale: 1" = 20'
Reduced Scale: 1" = 40'

0' 20' 40'

NOTES:

1. LOCATIONS OF EXISTING UNDERGROUND UTILITIES SHOWN HAVE BEEN PREPARED FROM THE MOST RELIABLE INFORMATION AVAILABLE TO THE ENGINEER. CONTRACTOR TO VERIFY DIAMETER AND ELEVATION OF ALL EXISTING PIPES PRIOR TO COMMENCEMENT OF WORK.
2. UNLESS OTHERWISE INDICATED, ELEVATIONS SHOWN FOR EXISTING UTILITIES ARE TOP OF PIPE ELEVATIONS AS DETERMINED BY SUBSURFACE UTILITY ENGINEERING (SUE) SURVEY OR AS-BUILT DRAWINGS.
3. ALL DAMAGED SIDEWALKS AND CURBS SHALL BE REPLACED PER BROWARD COUNTY MINIMUM STANDARDS.

SCALE HORIZONTAL 1"= 20'
SCALE VERTICAL 1"= 2'

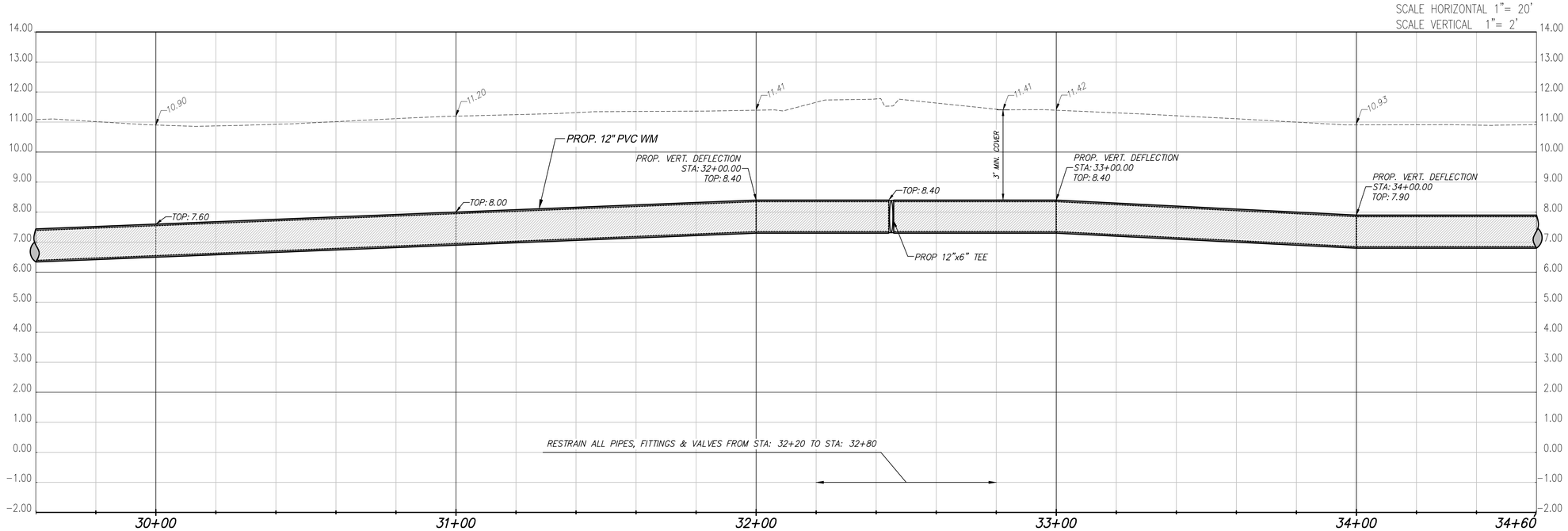

Revision	By	Appd.	YY.MM.DD

Issued	By	Appd.	YY.MM.DD

Seal

DAVE CLARKE, P.E.
State of Florida - License No. 66553

Consultants

Stantec
901 Ponce de Leon Blvd. Suite 900
Coral Gables, Florida 33134
www.stantec.com

The Contractor shall verify and be responsible for all dimensions. DO NOT scale the drawing - any errors or omissions shall be reported to Stantec without delay.
The Copyrights to all designs and drawings are the property of Stantec. Reproduction or use for any purpose other than that authorized by Stantec is forbidden.

CITY OF HALLANDALE BEACH
12" WATER MAIN ALONG FOSTER RD
CITY OF HALLANDALE BEACH, FLORIDA

File Name:	ER	DC	LF	19.07.31
	Dwn.	Chkd.	Dsgn.	YY.MM.DD

PLAN & PROFILE

Project No.	Scale	
177311197	AS NOTED	
Drawing No.	Sheet	Revision
	C-05	

Y:\1773\active\177311197\drawings\civil\177311197_plan & Profile.dwg
2020/02/07 4:32 PM By: Robins, Eduardo

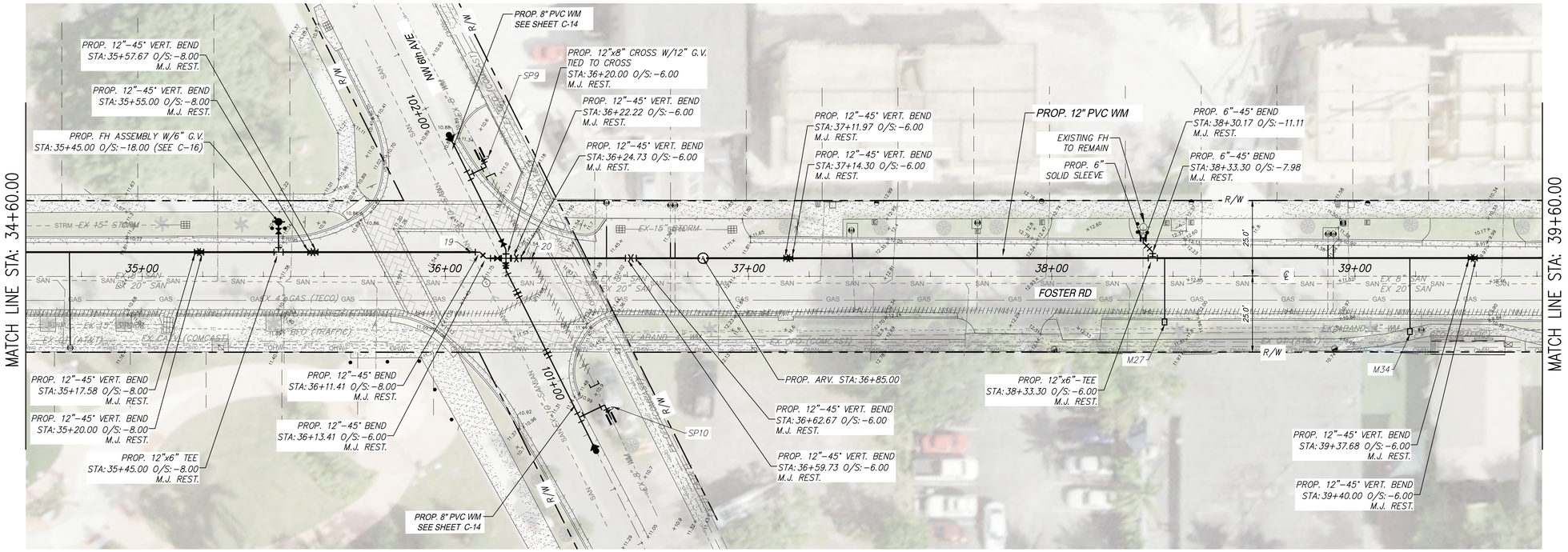

Scale: 1" = 20'
Reduced Scale: 1" = 40'
0' 20' 40'

NOTES:

1. LOCATIONS OF EXISTING UNDERGROUND UTILITIES SHOWN HAVE BEEN PREPARED FROM THE MOST RELIABLE INFORMATION AVAILABLE TO THE ENGINEER. CONTRACTOR TO VERIFY DIAMETER AND ELEVATION OF ALL EXISTING PIPES PRIOR TO COMMENCEMENT OF WORK.
2. UNLESS OTHERWISE INDICATED, ELEVATIONS SHOWN FOR EXISTING UTILITIES ARE TOP OF PIPE ELEVATIONS AS DETERMINED BY SUBSURFACE UTILITY ENGINEERING (SUE) SURVEY OR AS-BUILT DRAWINGS.
3. ALL DAMAGED SIDEWALKS AND CURBS SHALL BE REPLACED PER BROWARD COUNTY MINIMUM STANDARDS.

SCALE HORIZONTAL 1"= 20'
SCALE VERTICAL 1"= 2'

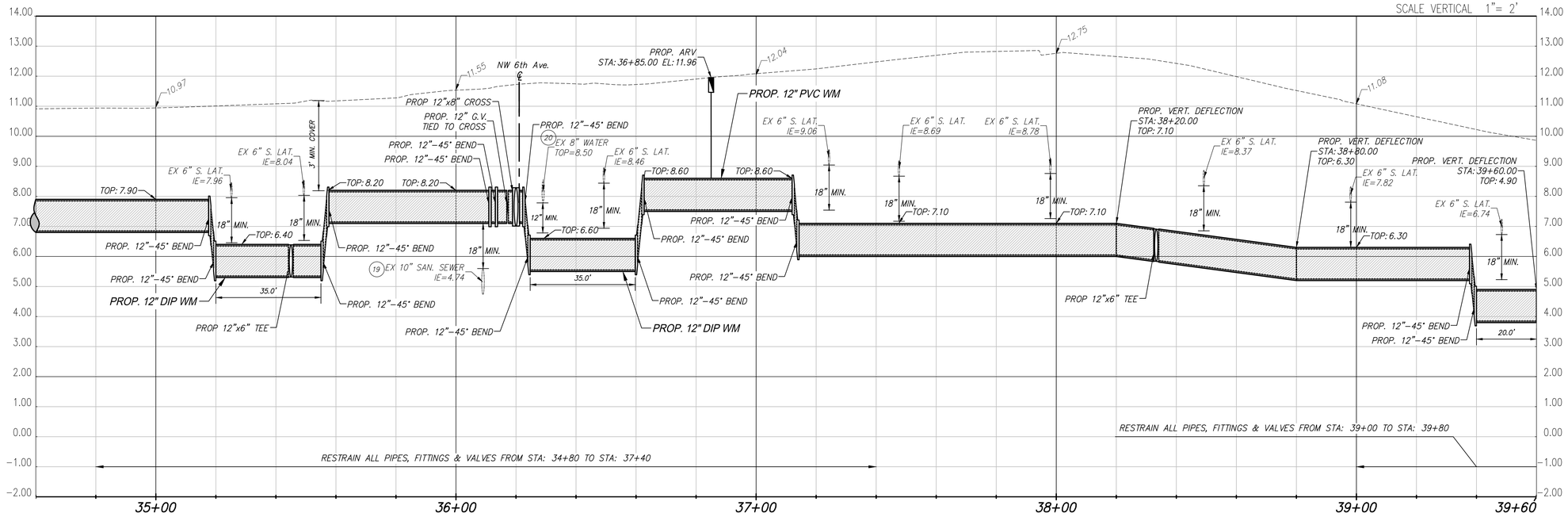

Revision	By	Appd.	YY.MM.DD

Issued	By	Appd.	YY.MM.DD

Seal

DAVE CLARKE, P.E.
State of Florida - License No. 66553

Consultants

Stantec
901 Ponce de Leon Blvd. Suite 900
Coral Gables, Florida 33134
www.stantec.com

The Contractor shall verify and be responsible for all dimensions. DO NOT scale the drawing - any errors or omissions shall be reported to Stantec without delay.
The Copyrights to all designs and drawings are the property of Stantec. Reproduction or use for any purpose other than that authorized by Stantec is forbidden.

CITY OF HALLANDALE BEACH
12" WATER MAIN ALONG FOSTER RD
CITY OF HALLANDALE BEACH, FLORIDA

File Name:	ER	DC	LF	19.07.31
	Dwn.	Chkd.	Dsgn.	YY.MM.DD

PLAN & PROFILE

Project No.	Scale	
177311197	AS NOTED	
Drawing No.	Sheet	Revision
	C-06	

Y:\1773\active\177311197\drawings\civil\177311197_plan & Profile.dwg
2020/02/07 4:32 PM By: Robaina, Eduardo

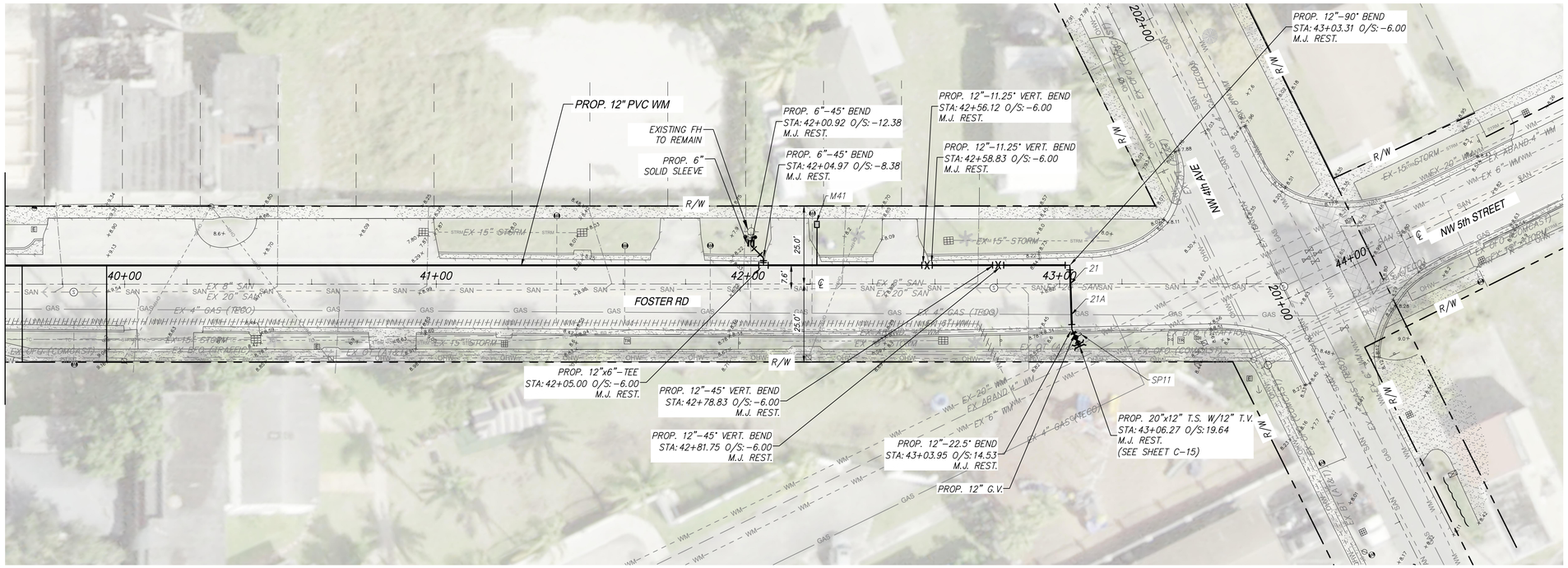

Scale: 1" = 20'
Reduced Scale: 1" = 40'

0' 20' 40'

NOTES:

1. LOCATIONS OF EXISTING UNDERGROUND UTILITIES SHOWN HAVE BEEN PREPARED FROM THE MOST RELIABLE INFORMATION AVAILABLE TO THE ENGINEER. CONTRACTOR TO VERIFY DIAMETER AND ELEVATION OF ALL EXISTING PIPES PRIOR TO COMMENCEMENT OF WORK.
2. UNLESS OTHERWISE INDICATED, ELEVATIONS SHOWN FOR EXISTING UTILITIES ARE TOP OF PIPE ELEVATIONS AS DETERMINED BY SUBSURFACE UTILITY ENGINEERING (SUE) SURVEY OR AS-BUILT DRAWINGS.
3. ALL DAMAGED SIDEWALKS AND CURBS SHALL BE REPLACED PER BROWARD COUNTY MINIMUM STANDARDS.

SCALE HORIZONTAL 1"= 20'
SCALE VERTICAL 1"= 2'

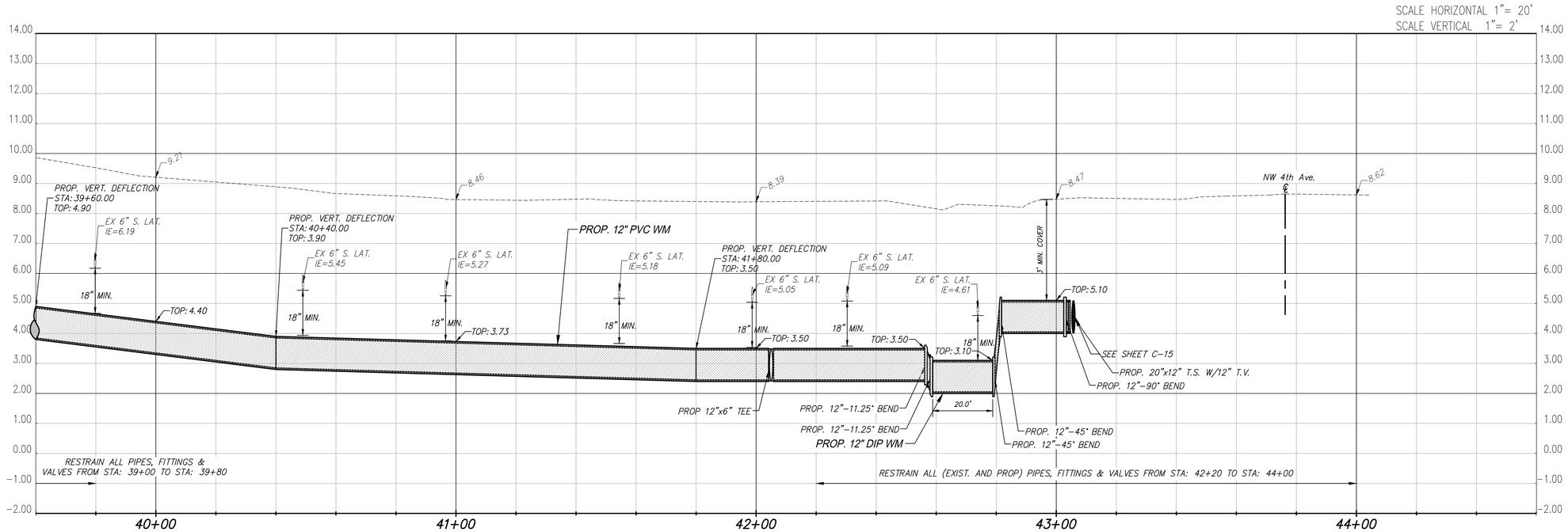

Revision	By	Appd.	YY.MM.DD

Issued	By	Appd.	YY.MM.DD

Seal

DAVE CLARKE, P.E.
State of Florida - License No. 66553

Consultants

Stantec
901 Ponce de Leon Blvd. Suite 900
Coral Gables, Florida 33134
www.stantec.com

The Contractor shall verify and be responsible for all dimensions. DO NOT scale the drawing - any errors or omissions shall be reported to Stantec without delay.
The Copyrights to all designs and drawings are the property of Stantec. Reproduction or use for any purpose other than that authorized by Stantec is forbidden.

CITY OF HALLANDALE BEACH
12" WATER MAIN ALONG FOSTER RD
CITY OF HALLANDALE BEACH, FLORIDA

File Name:	ER	DC	LF	19.07.31
	Dwn.	Chkd.	Dsgn.	YY.MM.DD

PLAN & PROFILE

Project No.	Scale	
177311197	AS NOTED	
Drawing No.	Sheet	Revision
	C-07	

V:\1773\active\177311197\drawings\civil\177311197_plan & Profile.dwg
2020/02/07 4:33 PM By: Robaina, Eduardo

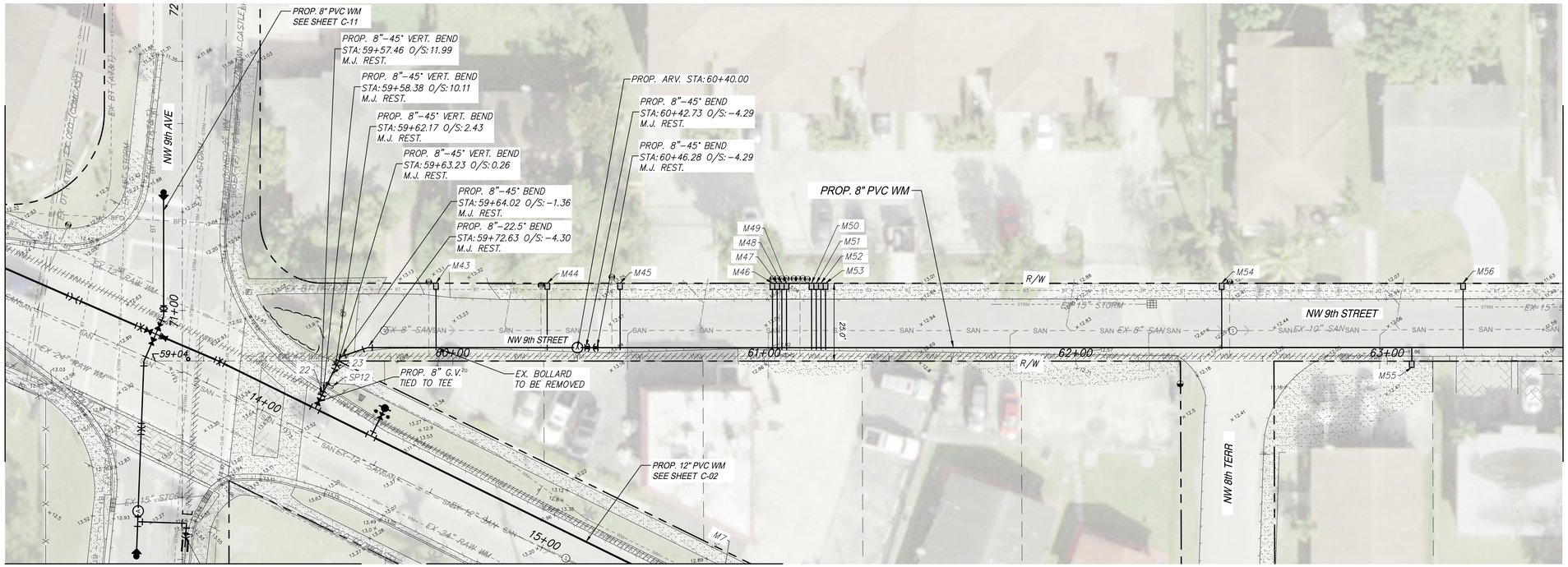

FOR CONTINUATION SEE SHEET C-11

FOR CONTINUATION SEE SHEET C-02

Scale: 1" = 20'
Reduced Scale: 1" = 40'
0' 20' 40'

NOTES:

1. LOCATIONS OF EXISTING UNDERGROUND UTILITIES SHOWN HAVE BEEN PREPARED FROM THE MOST RELIABLE INFORMATION AVAILABLE TO THE ENGINEER. CONTRACTOR TO VERIFY DIAMETER AND ELEVATION OF ALL EXISTING PIPES PRIOR TO COMMENCEMENT OF WORK.
2. UNLESS OTHERWISE INDICATED, ELEVATIONS SHOWN FOR EXISTING UTILITIES ARE TOP OF PIPE ELEVATIONS AS DETERMINED BY SUBSURFACE UTILITY ENGINEERING (SUE) SURVEY OR AS-BUILT DRAWINGS.
3. ALL DAMAGED SIDEWALKS AND CURBS SHALL BE REPLACED PER BROWARD COUNTY MINIMUM STANDARDS.

SCALE HORIZONTAL 1"= 20'
SCALE VERTICAL 1"= 2'

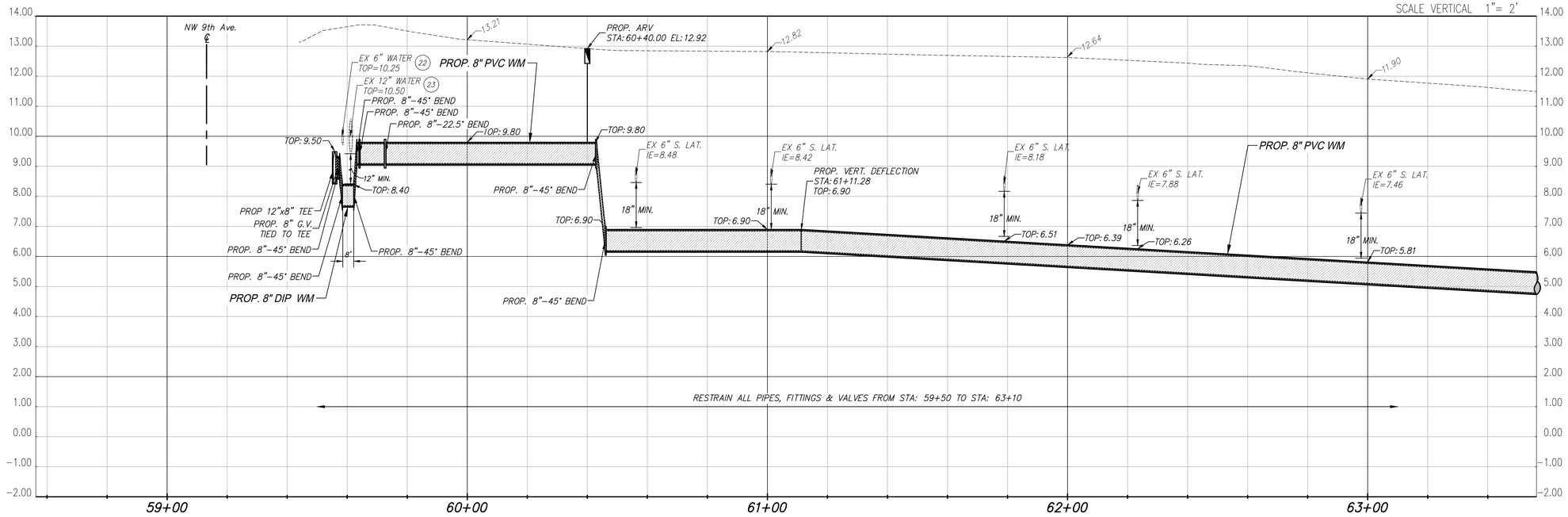

Revision	By	Appd.	YY.MM.DD

Issued	By	Appd.	YY.MM.DD

Seal

DAVE CLARKE, P.E.
State of Florida - License No. 66553

Consultants

Stantec
901 Ponce de Leon Blvd. Suite 900
Coral Gables, Florida 33134
www.stantec.com

The Contractor shall verify and be responsible for all dimensions. DO NOT scale the drawing - any errors or omissions shall be reported to Stantec without delay.
The Copyrights to all designs and drawings are the property of Stantec. Reproduction or use for any purpose other than that authorized by Stantec is forbidden.

CITY OF HALLANDALE BEACH
12" WATER MAIN ALONG FOSTER RD
CITY OF HALLANDALE BEACH, FLORIDA

File Name:	ER	DC	LF	19.07.31
	Dwn.	Chkd.	Dsgn.	YY.MM.DD

PLAN & PROFILE

Project No.	Scale	
177311197	AS NOTED	
Drawing No.	Sheet	Revision
	C-08	

V:\1773\active\177311197\drawings\civil\177311197_plan & Profile.dwg
2020/02/07 4:33 PM By: Robaina, Eduardo

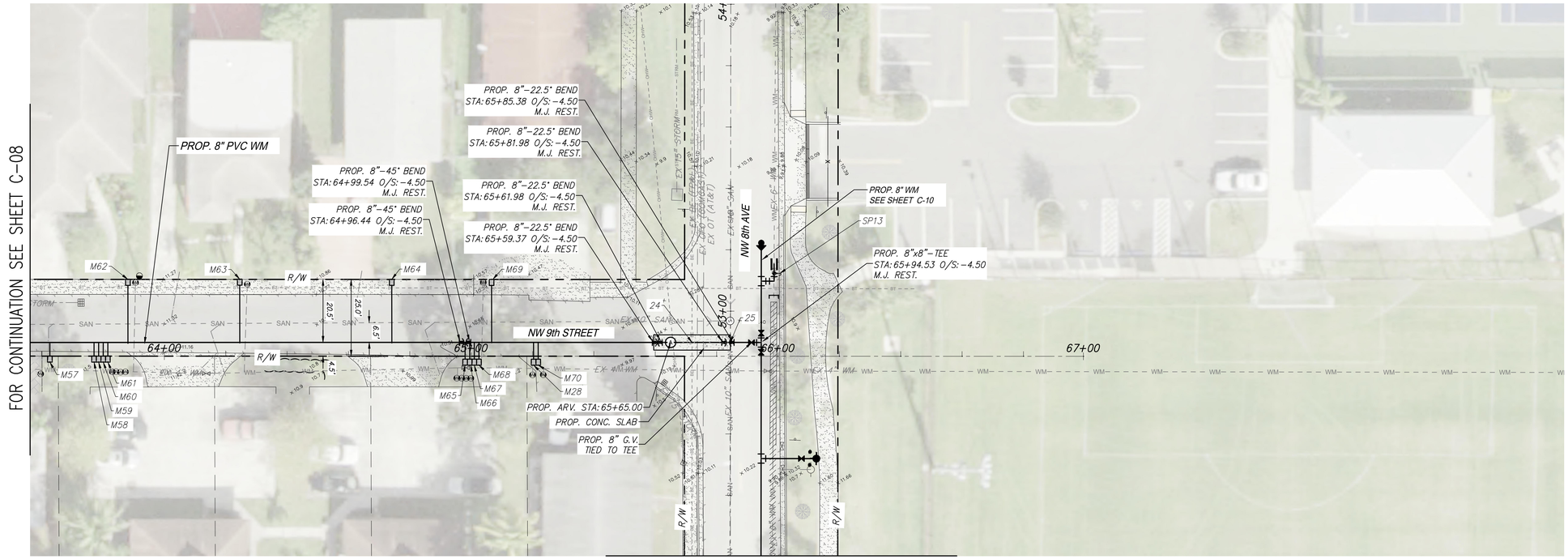

Scale: 1" = 20'
Reduced Scale: 1" = 40'
0' 20' 40'

NOTES:

1. LOCATIONS OF EXISTING UNDERGROUND UTILITIES SHOWN HAVE BEEN PREPARED FROM THE MOST RELIABLE INFORMATION AVAILABLE TO THE ENGINEER. CONTRACTOR TO VERIFY DIAMETER AND ELEVATION OF ALL EXISTING PIPES PRIOR TO COMMENCEMENT OF WORK.
2. UNLESS OTHERWISE INDICATED, ELEVATIONS SHOWN FOR EXISTING UTILITIES ARE TOP OF PIPE ELEVATIONS AS DETERMINED BY SUBSURFACE UTILITY ENGINEERING (SUE) SURVEY OR AS-BUILT DRAWINGS.
3. ALL DAMAGED SIDEWALKS AND CURBS SHALL BE REPLACED PER BROWARD COUNTY MINIMUM STANDARDS.

SCALE HORIZONTAL 1"= 20'
SCALE VERTICAL 1"= 2'

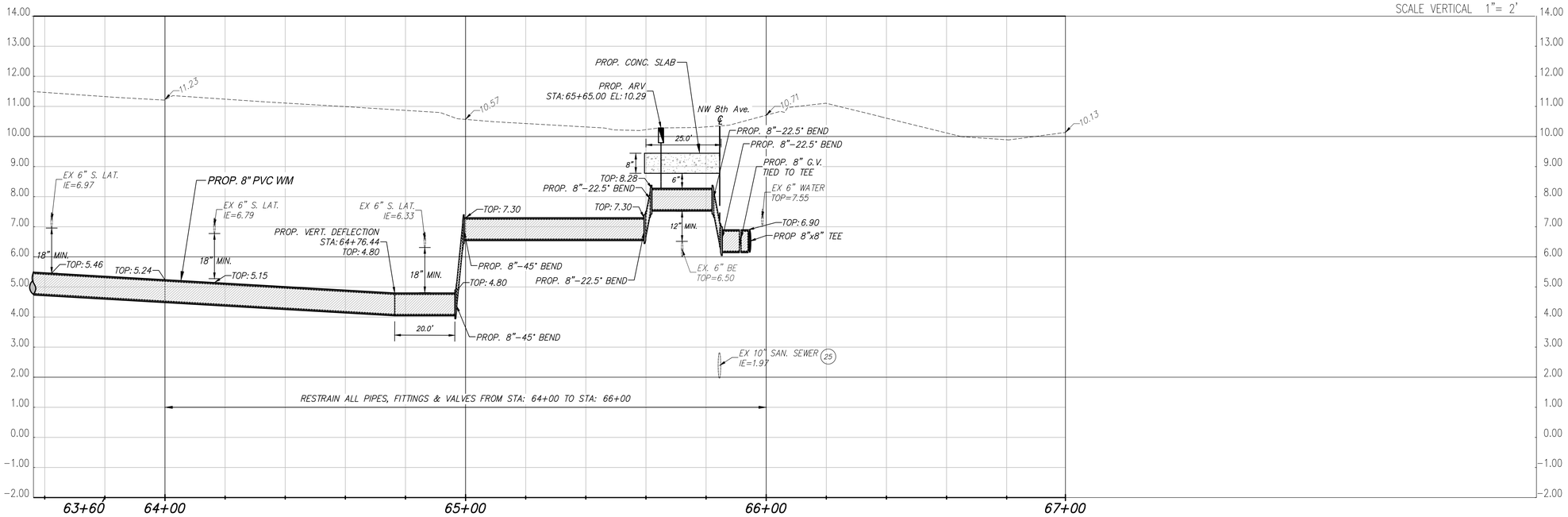

Revision	By	Appd.	YY.MM.DD

Issued	By	Appd.	YY.MM.DD

Seal

DAVE CLARKE, P.E.
State of Florida - License No. 66553

Consultants

Stantec
901 Ponce de Leon Blvd. Suite 900
Coral Gables, Florida 33134
www.stantec.com

The Contractor shall verify and be responsible for all dimensions. DO NOT scale the drawing - any errors or omissions shall be reported to Stantec without delay.
The Copyrights to all designs and drawings are the property of Stantec. Reproduction or use for any purpose other than that authorized by Stantec is forbidden.

CITY OF HALLANDALE BEACH
12" WATER MAIN ALONG FOSTER RD
CITY OF HALLANDALE BEACH, FLORIDA

File Name:	ER	DC	LF	19.07.31
	Dwn.	Chkd.	Dsgn.	YY.MM.DD

PLAN & PROFILE

Project No.	Scale	
177311197	AS NOTED	
Drawing No.	Sheet	Revision
	C-09	

V:\1773\active\177311197\drawings\civil\177311197_plan & Profile.dwg
2020/02/07 4:34 PM By: Robins, Eduardo

FOR CONTINUATION SEE SHEET C-03

FOR CONTINUATION SEE SHEET C-09

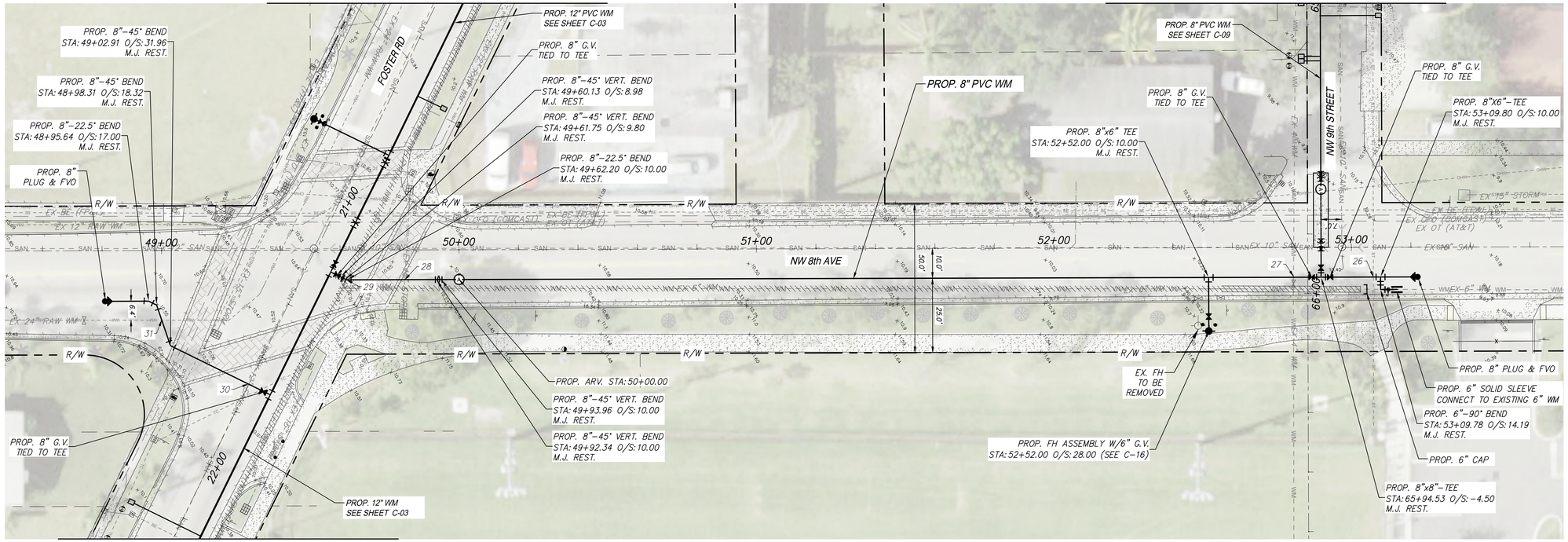

Scale: 1" = 20'
Reduced Scale: 1" = 40'

0' 20' 40'

NOTES:

1. LOCATIONS OF EXISTING UNDERGROUND UTILITIES SHOWN HAVE BEEN PREPARED FROM THE MOST RELIABLE INFORMATION AVAILABLE TO THE ENGINEER. CONTRACTOR TO VERIFY DIAMETER AND ELEVATION OF ALL EXISTING PIPES PRIOR TO COMMENCEMENT OF WORK.
2. UNLESS OTHERWISE INDICATED, ELEVATIONS SHOWN FOR EXISTING UTILITIES ARE TOP OF PIPE ELEVATIONS AS DETERMINED BY SUBSURFACE UTILITY ENGINEERING (SUE) SURVEY OR AS-BUILT DRAWINGS.
3. ALL DAMAGED SIDEWALKS AND CURBS SHALL BE REPLACED PER BROWARD COUNTY MINIMUM STANDARDS.

FOR CONTINUATION SEE SHEET C-03

SCALE HORIZONTAL 1"= 20'
SCALE VERTICAL 1"= 2'

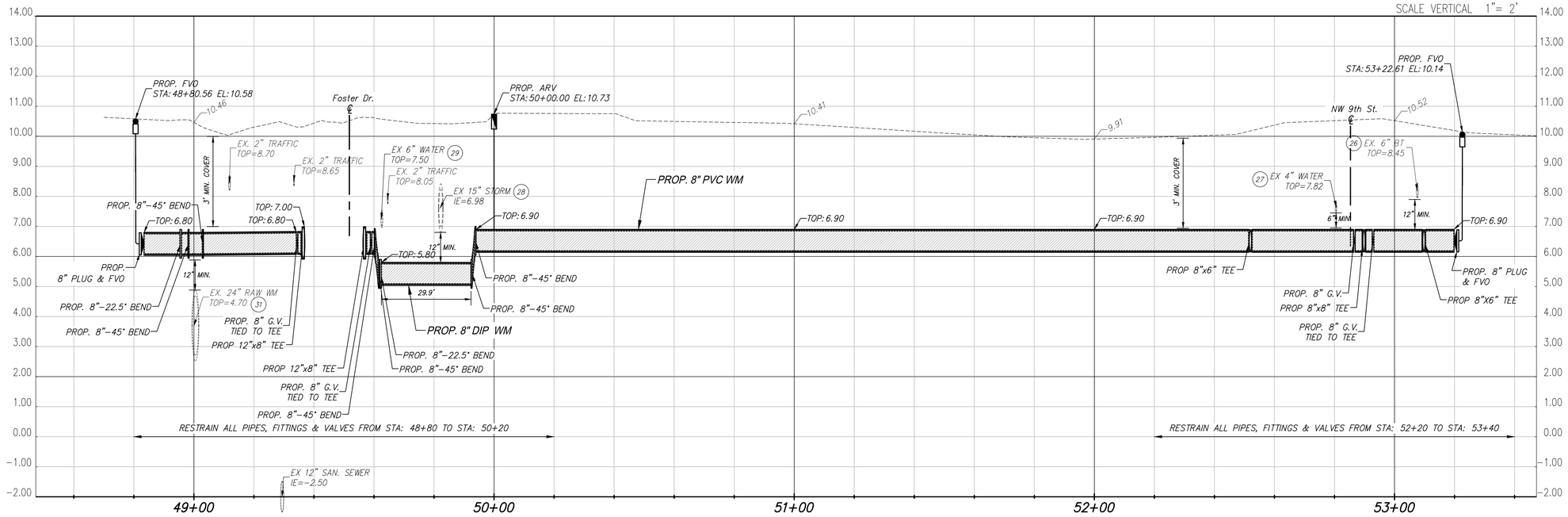

Revision	By	Appd.	YY.MM.DD

Issued	By	Appd.	YY.MM.DD

Seal

DAVE CLARKE, P.E.
State of Florida - License No. 66553

Consultants

Stantec
901 Ponce de Leon Blvd. Suite 900
Coral Gables, Florida 33134
www.stantec.com

The Contractor shall verify and be responsible for all dimensions. DO NOT scale the drawing - any errors or omissions shall be reported to Stantec without delay.
The Copyrights to all designs and drawings are the property of Stantec. Reproduction or use for any purpose other than that authorized by Stantec is forbidden.

CITY OF HALLANDALE BEACH
12" WATER MAIN ALONG FOSTER RD
CITY OF HALLANDALE BEACH, FLORIDA

File Name:	ER	DC	LF	19.07.31
	Dwn.	Chkd.	Dsgn.	YY.MM.DD

PLAN & PROFILE

Project No.	Scale	
177311197	AS NOTED	
Drawing No.	Sheet	Revision
	C-10	

y:\1773\active\177311197\drawings\civil\177311197_plan & Profile.dwg
2020/02/07 4:34 PM By: Robaina, Eduardo

FOR CONTINUATION SEE SHEET C-01

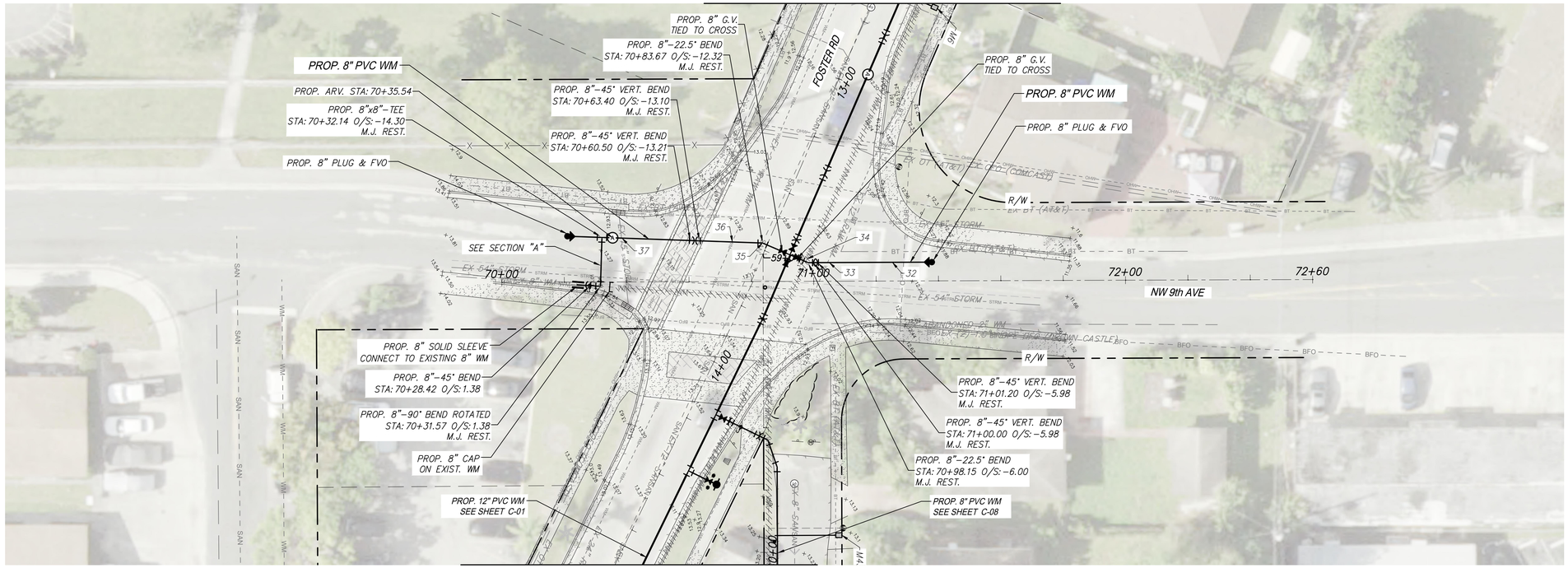

FOR CONTINUATION SEE SHEET C-08

Scale: 1" = 20'
Reduced Scale: 1" = 40'
0' 20' 40'

NOTES:

1. LOCATIONS OF EXISTING UNDERGROUND UTILITIES SHOWN HAVE BEEN PREPARED FROM THE MOST RELIABLE INFORMATION AVAILABLE TO THE ENGINEER. CONTRACTOR TO VERIFY DIAMETER AND ELEVATION OF ALL EXISTING PIPES PRIOR TO COMMENCEMENT OF WORK.
2. UNLESS OTHERWISE INDICATED, ELEVATIONS SHOWN FOR EXISTING UTILITIES ARE TOP OF PIPE ELEVATIONS AS DETERMINED BY SUBSURFACE UTILITY ENGINEERING (SUE) SURVEY OR AS-BUILT DRAWINGS.
3. ALL DAMAGED SIDEWALKS AND CURBS SHALL BE REPLACED PER BROWARD COUNTY MINIMUM STANDARDS.

SCALE HORIZONTAL 1"= 20'
SCALE VERTICAL 1"= 2'

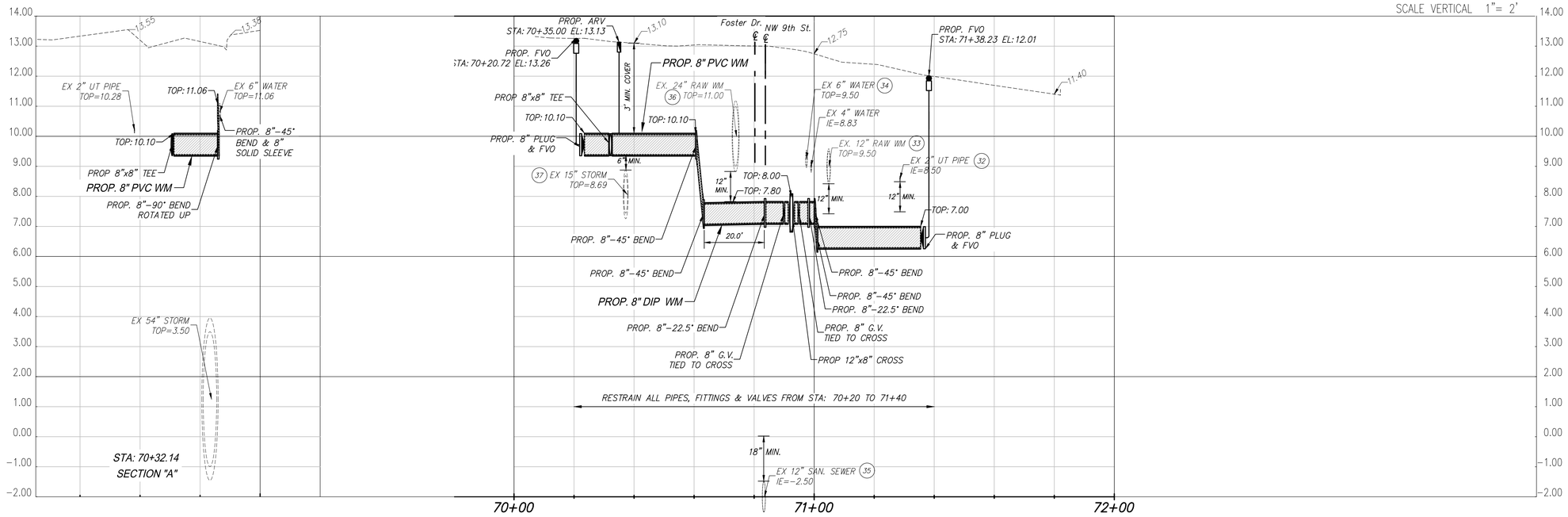

Revision	By	Appd.	YY.MM.DD

Issued	By	Appd.	YY.MM.DD

Seal

DAVE CLARKE, P.E.
State of Florida - License No. 66553

Consultants

Stantec
901 Ponce de Leon Blvd. Suite 900
Coral Gables, Florida 33134
www.stantec.com

The Contractor shall verify and be responsible for all dimensions. DO NOT scale the drawing - any errors or omissions shall be reported to Stantec without delay.
The Copyrights to all designs and drawings are the property of Stantec. Reproduction or use for any purpose other than that authorized by Stantec is forbidden.

CITY OF HALLANDALE BEACH
12" WATER MAIN ALONG FOSTER RD
CITY OF HALLANDALE BEACH, FLORIDA

File Name:	ER	DC	LF	19.07.31
	Dwn.	Chkd.	Dsgn.	YY.MM.DD

PLAN & PROFILE

Project No.	Scale	
177311197	AS NOTED	
Drawing No.	Sheet	Revision
	C-11	

V:\1773\active\177311197\drawings\civil\177311197_plan & Profile.dwg
2020/02/07 4:35 PM By: Robins, Eduardo

FOR CONTINUATION SEE SHEET C-03

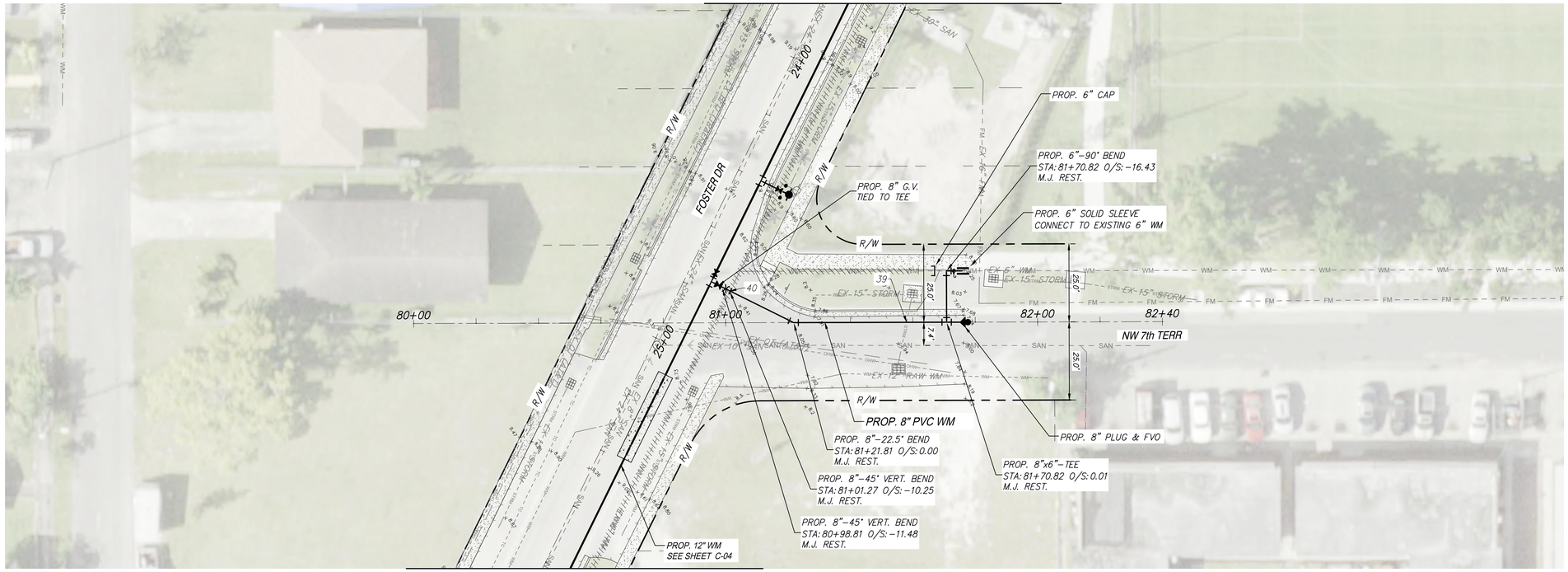

FOR CONTINUATION SEE SHEET C-04

Scale: 1" = 20'
Reduced Scale: 1" = 40'
0' 20' 40'

NOTES:

1. LOCATIONS OF EXISTING UNDERGROUND UTILITIES SHOWN HAVE BEEN PREPARED FROM THE MOST RELIABLE INFORMATION AVAILABLE TO THE ENGINEER. CONTRACTOR TO VERIFY DIAMETER AND ELEVATION OF ALL EXISTING PIPES PRIOR TO COMMENCEMENT OF WORK.
2. UNLESS OTHERWISE INDICATED, ELEVATIONS SHOWN FOR EXISTING UTILITIES ARE TOP OF PIPE ELEVATIONS AS DETERMINED BY SUBSURFACE UTILITY ENGINEERING (SUE) SURVEY OR AS-BUILT DRAWINGS.
3. ALL DAMAGED SIDEWALKS AND CURBS SHALL BE REPLACED PER BROWARD COUNTY MINIMUM STANDARDS.

SCALE HORIZONTAL 1"= 20'
SCALE VERTICAL 1"= 2'

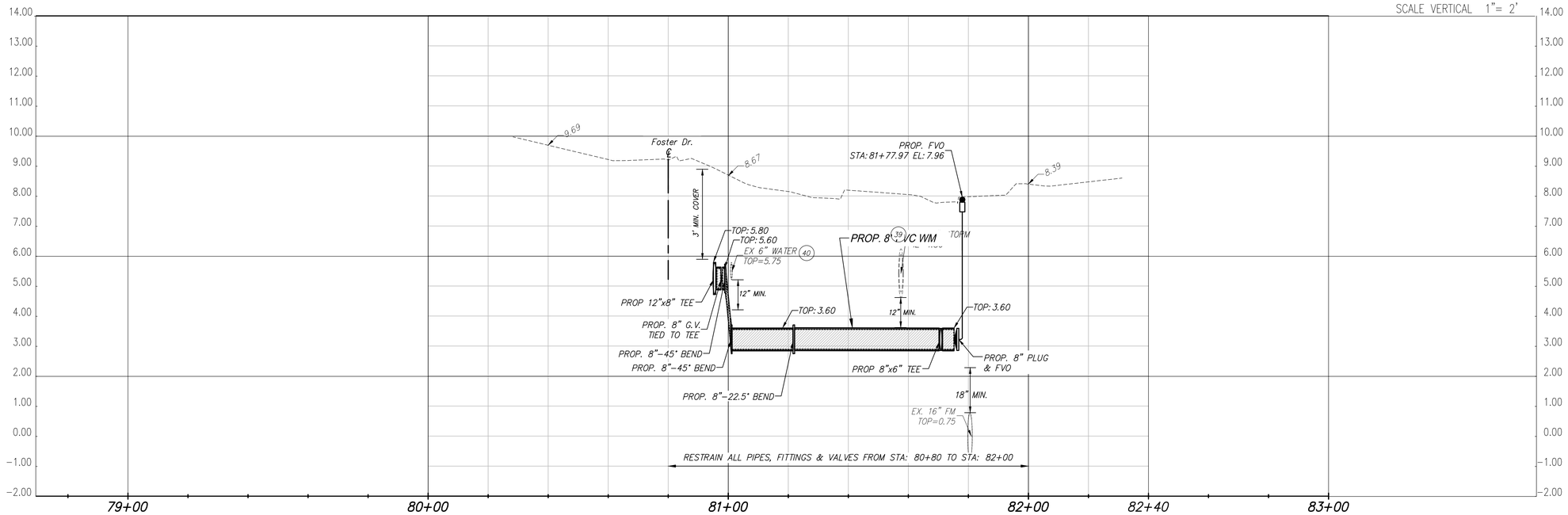

Revision	By	Appd.	YY.MM.DD

Issued	By	Appd.	YY.MM.DD

Seal

DAVE CLARKE, P.E.
State of Florida - License No. 66553

Consultants

Stantec
901 Ponce de Leon Blvd. Suite 900
Coral Gables, Florida 33134
www.stantec.com

The Contractor shall verify and be responsible for all dimensions. DO NOT scale the drawing - any errors or omissions shall be reported to Stantec without delay.
The Copyrights to all designs and drawings are the property of Stantec. Reproduction or use for any purpose other than that authorized by Stantec is forbidden.

CITY OF HALLANDALE BEACH
12" WATER MAIN ALONG FOSTER RD
CITY OF HALLANDALE BEACH, FLORIDA

File Name:	ER	DC	LF	19.07.31
	Dwn.	Chkd.	Dsgn.	YY.MM.DD

PLAN & PROFILE

Project No.	Scale	
177311197	AS NOTED	
Drawing No.	Sheet	Revision
	C-12	

V:\1773\active\177311197\drawings\civil\177311197_plan & Profile.dwg
2020/02/11 11:45 AM By: Ricabrio, Eduardo

FOR CONTINUATION SEE SHEET C-04

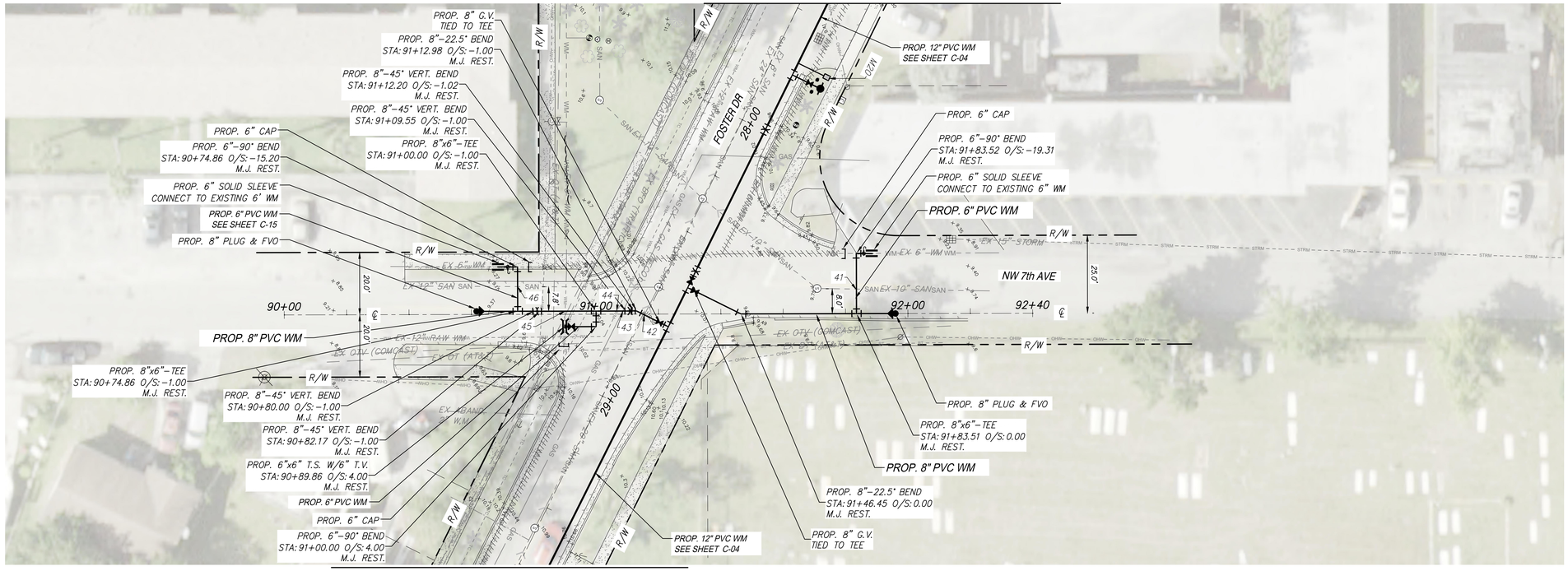

FOR CONTINUATION SEE SHEET C-04

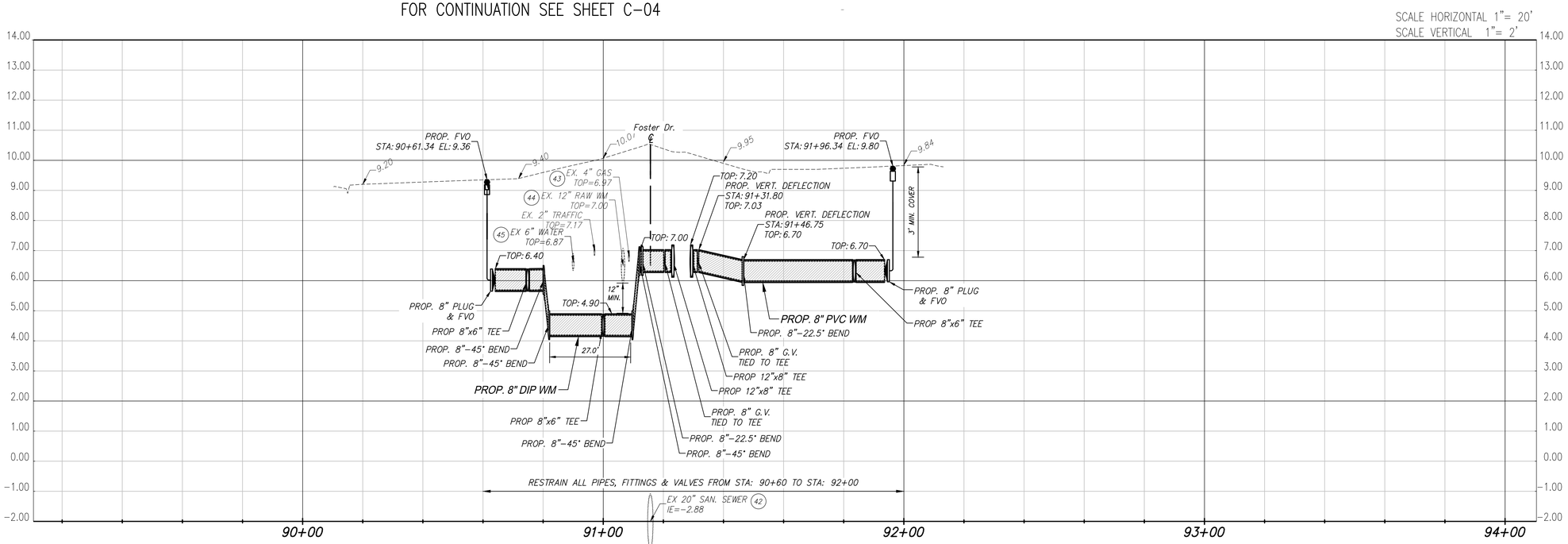

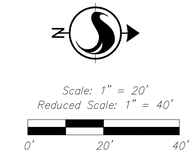

NOTES:

1. LOCATIONS OF EXISTING UNDERGROUND UTILITIES SHOWN HAVE BEEN PREPARED FROM THE MOST RELIABLE INFORMATION AVAILABLE TO THE ENGINEER. CONTRACTOR TO VERIFY DIAMETER AND ELEVATION OF ALL EXISTING PIPES PRIOR TO COMMENCEMENT OF WORK.
2. UNLESS OTHERWISE INDICATED, ELEVATIONS SHOWN FOR EXISTING UTILITIES ARE TOP OF PIPE ELEVATIONS AS DETERMINED BY SUBSURFACE UTILITY ENGINEERING (SUE) SURVEY OR AS-BUILT DRAWINGS.
3. ALL DAMAGED SIDEWALKS AND CURBS SHALL BE REPLACED PER BROWARD COUNTY MINIMUM STANDARDS.

Revision	By	Appd.	YY.MM.DD

Issued	By	Appd.	YY.MM.DD

Seal

DAVE CLARKE, P.E.
State of Florida - License No. 66553

Consultants

Stantec
901 Ponce de Leon Blvd. Suite 900
Coral Gables, Florida 33134
www.stantec.com

The Contractor shall verify and be responsible for all dimensions. DO NOT scale the drawing - any errors or omissions shall be reported to Stantec without delay.
The Copyrights to all designs and drawings are the property of Stantec. Reproduction or use for any purpose other than that authorized by Stantec is forbidden.

CITY OF HALLANDALE BEACH
12" WATER MAIN ALONG FOSTER RD
CITY OF HALLANDALE BEACH, FLORIDA

File Name:	ER	DC	LF	19.07.31
	Dwn.	Chkd.	Dsgn.	YY.MM.DD

PLAN & PROFILE

Project No.	Scale	
177311197	AS NOTED	
Drawing No.	Sheet	Revision
	C-13	

V:\1773\active\177311197\drawings\civil\177311197_plan & Profile.dwg
2020/02/07 4:36 PM By: Robins, Eduardo

FOR CONTINUATION SEE SHEET C-06

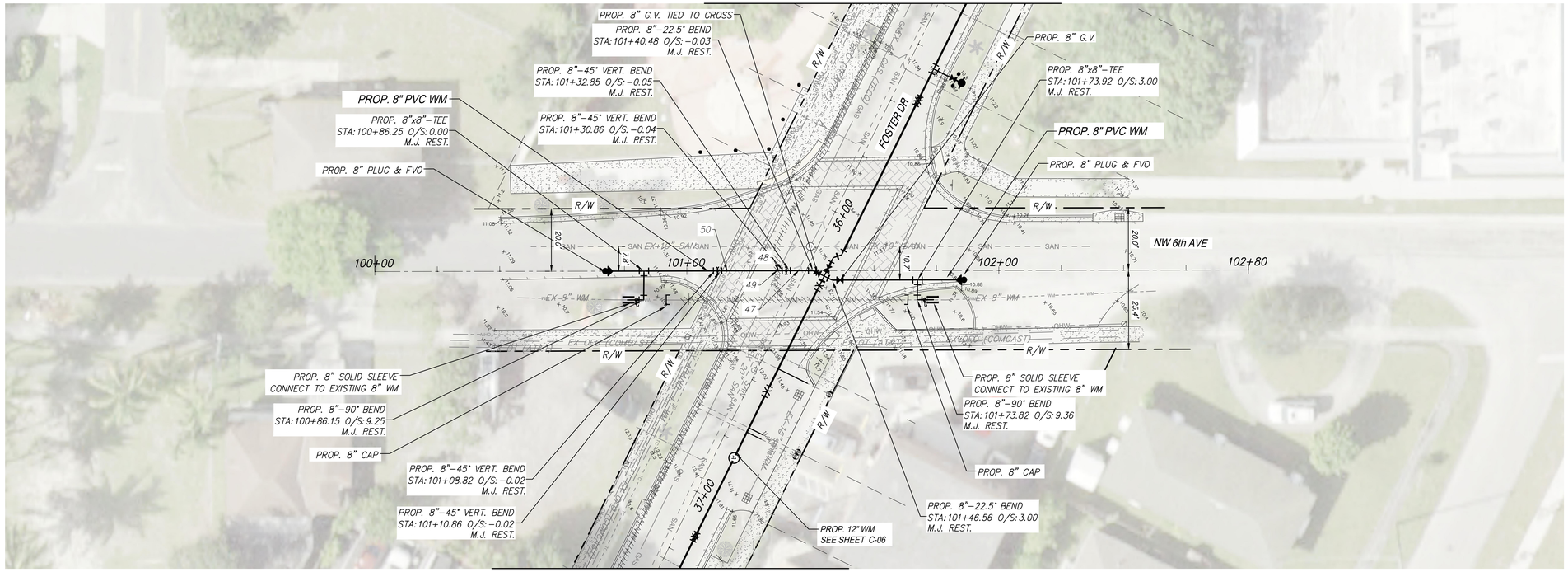

FOR CONTINUATION SEE SHEET C-06

Scale: 1" = 20'
Reduced Scale: 1" = 40'
0' 20' 40'

NOTES:

1. LOCATIONS OF EXISTING UNDERGROUND UTILITIES SHOWN HAVE BEEN PREPARED FROM THE MOST RELIABLE INFORMATION AVAILABLE TO THE ENGINEER. CONTRACTOR TO VERIFY DIAMETER AND ELEVATION OF ALL EXISTING PIPES PRIOR TO COMMENCEMENT OF WORK.
2. UNLESS OTHERWISE INDICATED, ELEVATIONS SHOWN FOR EXISTING UTILITIES ARE TOP OF PIPE ELEVATIONS AS DETERMINED BY SUBSURFACE UTILITY ENGINEERING (SUE) SURVEY OR AS-BUILT DRAWINGS.
3. ALL DAMAGED SIDEWALKS AND CURBS SHALL BE REPLACED PER BROWARD COUNTY MINIMUM STANDARDS.

SCALE HORIZONTAL 1"= 20'
SCALE VERTICAL 1"= 2'

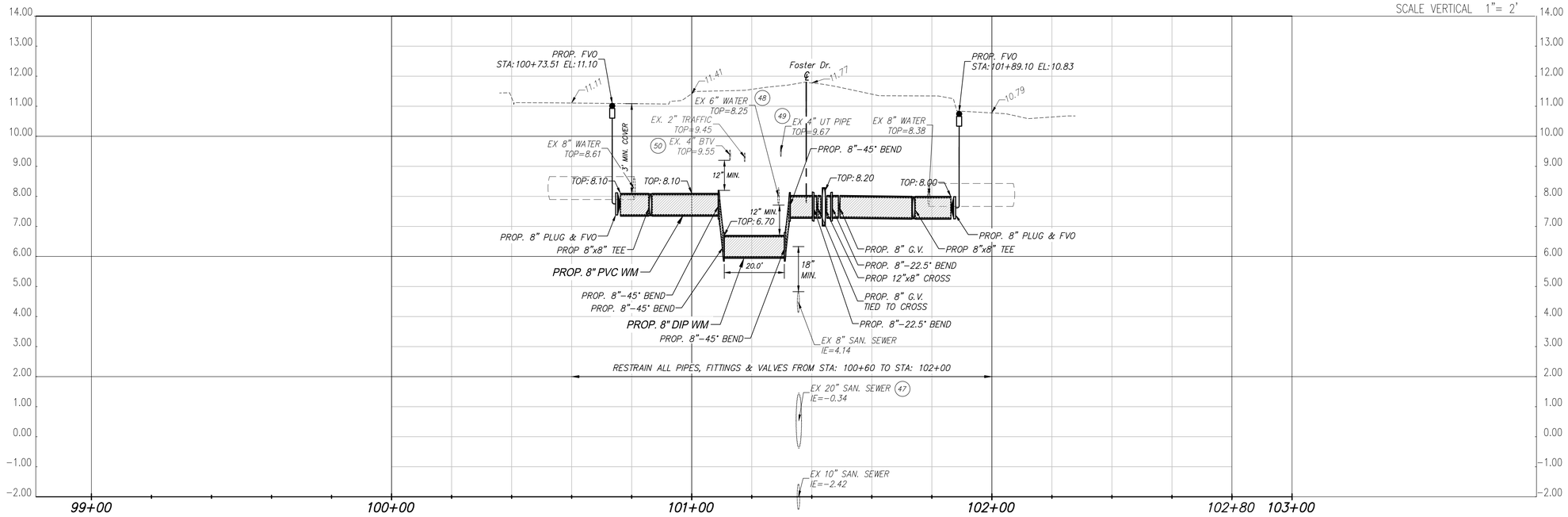

Revision	By	Appd.	YY.MM.DD

Issued	By	Appd.	YY.MM.DD

Seal

DAVE CLARKE, P.E.
State of Florida - License No. 66553

Consultants

Stantec
901 Ponce de Leon Blvd. Suite 900
Coral Gables, Florida 33134
www.stantec.com

The Contractor shall verify and be responsible for all dimensions. DO NOT scale the drawing - any errors or omissions shall be reported to Stantec without delay.
The Copyrights to all designs and drawings are the property of Stantec. Reproduction or use for any purpose other than that authorized by Stantec is forbidden.

CITY OF HALLANDALE BEACH
12" WATER MAIN ALONG FOSTER RD
CITY OF HALLANDALE BEACH, FLORIDA

File Name:	ER	DC	LF	19.07.31
	Dwn.	Chkd.	Dsgn.	YY.MM.DD

PLAN & PROFILE

Project No.	Scale	
177311197	AS NOTED	
Drawing No.	Sheet	Revision
	C-14	

V:\1773\active\177311197\drawings\civil\177311197_plan & Profile.dwg
2020/02/07 4:36 PM By: Robins, Eduardo

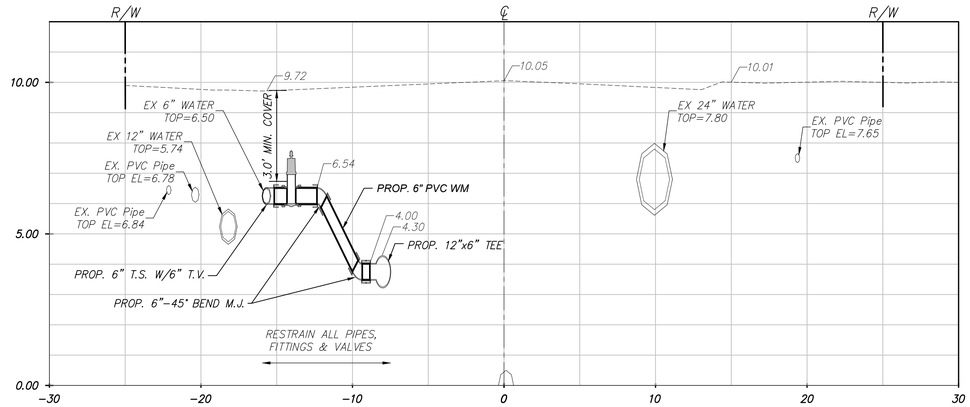

STA:10+40.00
PROPOSED 6" WM CONNECTION (SEE SHEET C-01)

Scale Horiz: 1" = 5'
Scale Vert: 1" = 2.5'

0' 5' 10'

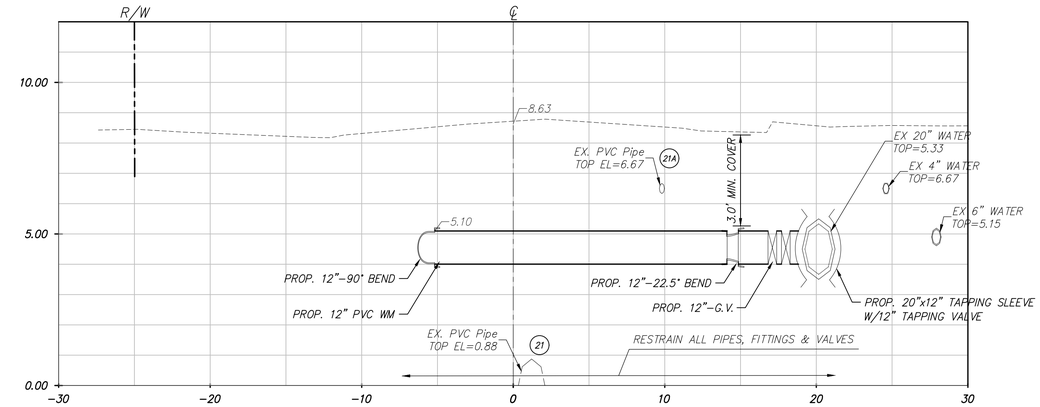

STA:43+03.50
PROPOSED 12" WM CONNECTION (SEE SHEET C-07)

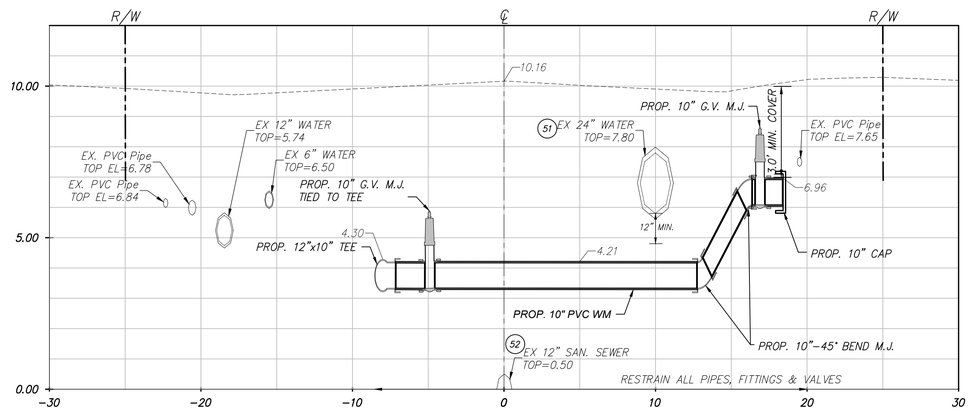

STA:10+70.00
PROPOSED 10" WM CONNECTION (SEE SHEET C-01)

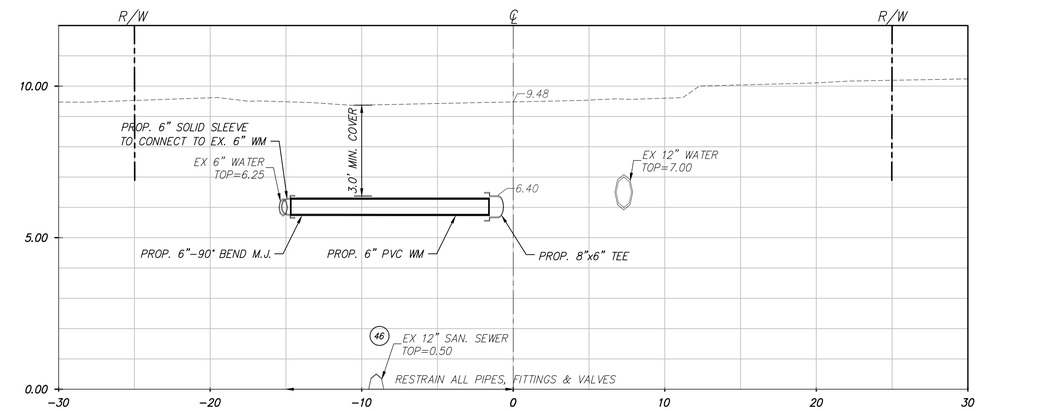

STA:90+74.86
PROPOSED 6" WM CONNECTION (SEE SHEET C-13)

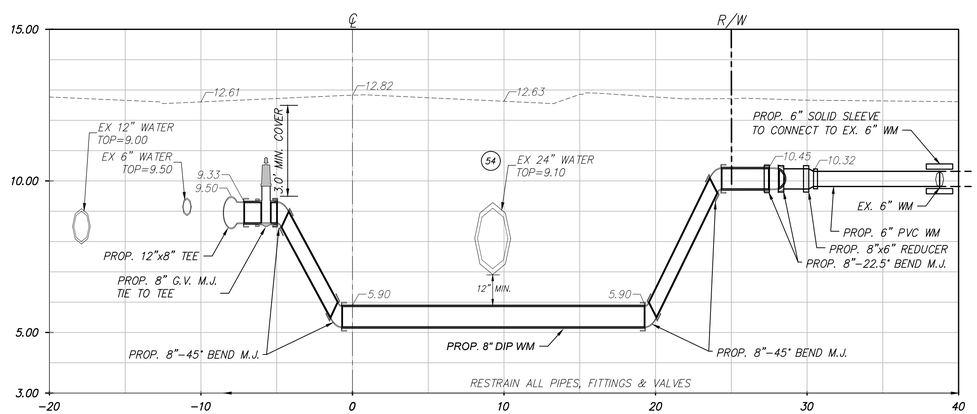

STA:16+55.00
PROPOSED 8" WM CONNECTION (SEE SHEET C-02)

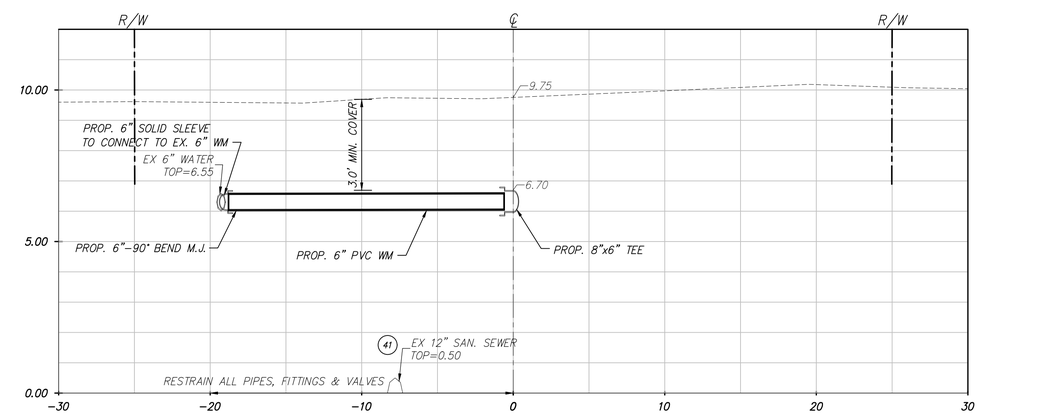

STA:91+83.51
PROPOSED 6" WM CONNECTION (SEE SHEET C-13)

Revision	By	Appd.	YY.MM.DD

Issued	By	Appd.	YY.MM.DD

Seal

DAVE CLARKE, P.E.
State of Florida - License No. 66553

Consultants

Stantec
901 Ponce de Leon Blvd. Suite 900
Coral Gables, Florida 33134
www.stantec.com

The Contractor shall verify and be responsible for all dimensions. DO NOT scale the drawing - any errors or omissions shall be reported to Stantec without delay.
The Copyrights to all designs and drawings are the property of Stantec. Reproduction or use for any purpose other than that authorized by Stantec is forbidden.

CITY OF HALLANDALE BEACH
12" WATER MAIN ALONG FOSTER RD
CITY OF HALLANDALE BEACH, FLORIDA

File Name:	ER	DC	LF	19.07.31
	Dwn.	Chkd.	Dsgn.	YY.MM.DD

WATER CONNECTION SECTIONS

Project No.	Scale	
177311197	AS NOTED	
Drawing No.	Sheet	Revision
	C-15	

V:\1773\active\177311197\drawings\civil\177311197_cross Sections.dwg
2020/02/07 4:37 PM By: Robano, Eduardo

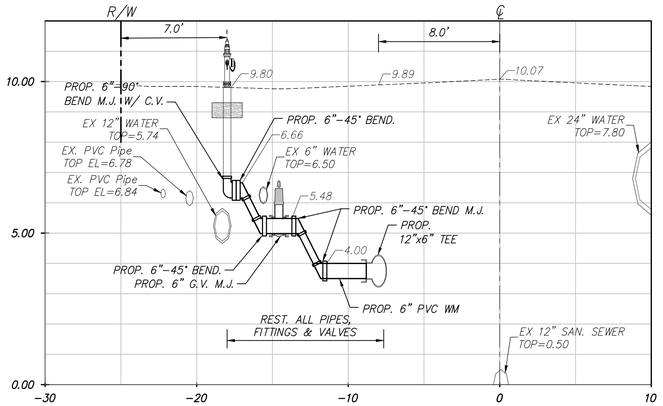

PROPOSED FH (SEE SHEET C-01) STA:10+53.90

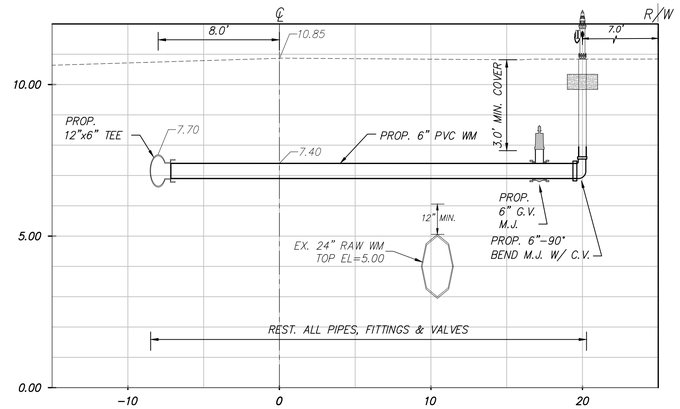

STA:20+80.00 PROPOSED FH (SEE SHEET C-03)

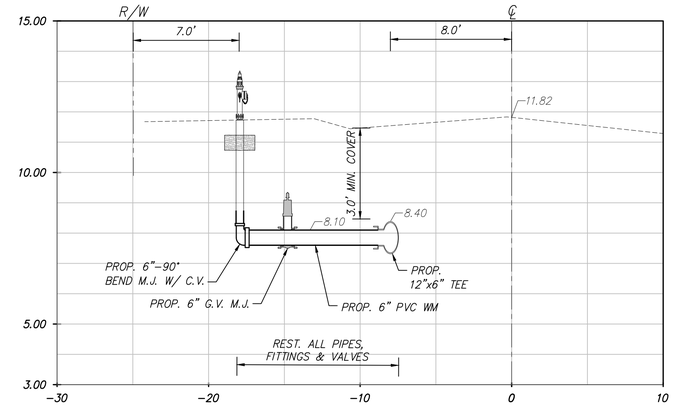

PROPOSED FH (SEE SHEET C-05) STA:32+45.00

Scale Horiz: 1" = 5'
Scale Vert: 1" = 2.5'
0' 5' 10'

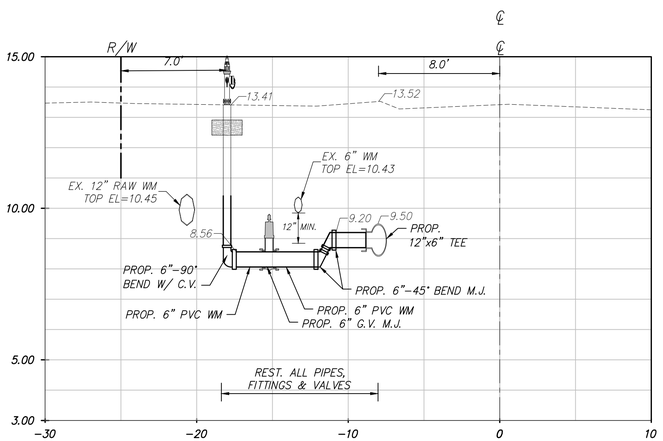

PROPOSED FH (SEE SHEET C-01) STA:14+35.00

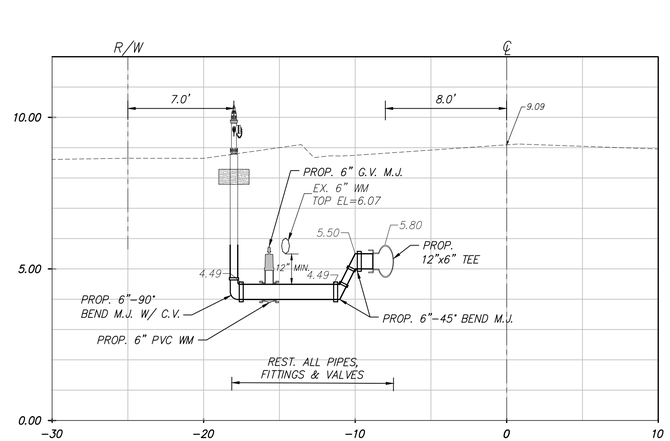

PROPOSED FH (SEE SHEET C-03) STA:24+40.00

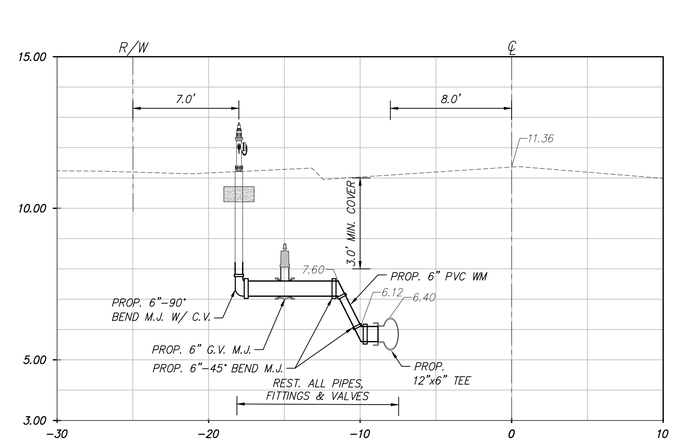

PROPOSED FH (SEE SHEET C-06) STA:35+45.00

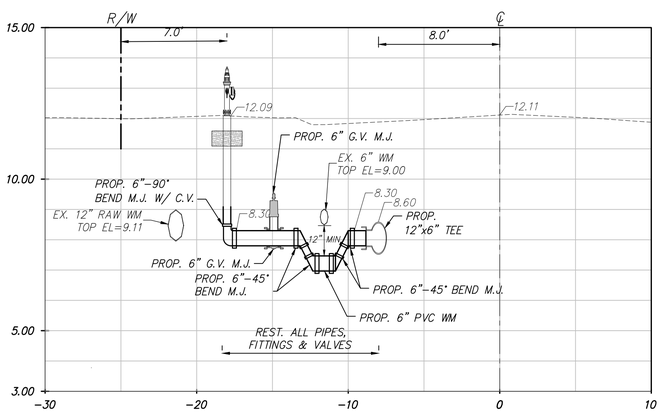

PROPOSED FH (SEE SHEET C-02) STA:17+85.00

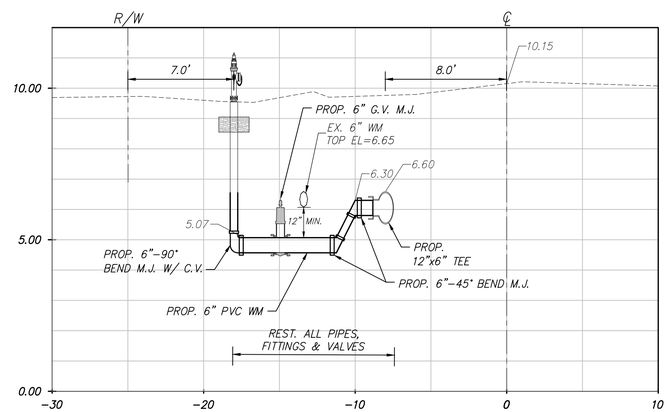

PROPOSED FH (SEE SHEET C-04) STA:27+80.00

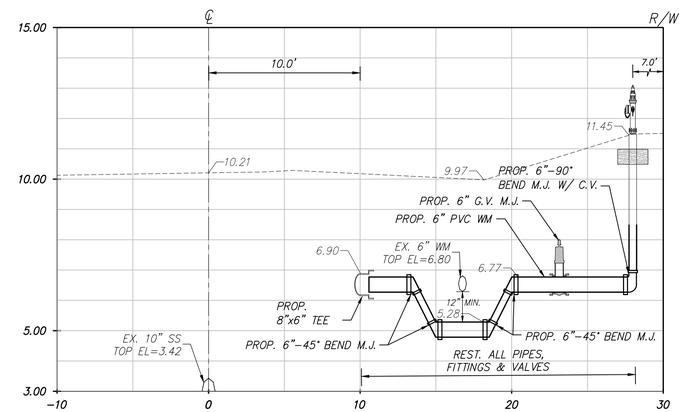

STA:52+52.00 PROPOSED FH (SEE SHEET C-10)

Revision	By	Appd.	YY.MM.DD

Issued	By	Appd.	YY.MM.DD

Seal

DAVE CLARKE, P.E.
State of Florida - License No. 66553

Consultants

Stantec
901 Ponce de Leon Blvd. Suite 900
Coral Gables, Florida 33134
www.stantec.com

The Contractor shall verify and be responsible for all dimensions. DO NOT scale the drawing - any errors or omissions shall be reported to Stantec without delay.
The Copyrights to all designs and drawings are the property of Stantec. Reproduction or use for any purpose other than that authorized by Stantec is forbidden.

CITY OF HALLANDALE BEACH
12" WATER MAIN ALONG FOSTER RD
CITY OF HALLANDALE BEACH, FLORIDA

File Name:	ER	DC	LF	19.07.31
	Dwn.	Chkd.	Dsgn.	YY.MM.DD

FIRE HYDRANT SECTIONS

Project No.	Scale	
177311197	AS NOTED	
Drawing No.	Sheet	Revision
	C-16	

Y:\1773\active\177311197\drawings\civil\177311197_cross Sections.dwg
2020/02/07 4:37 PM By: Robaina, Eduardo

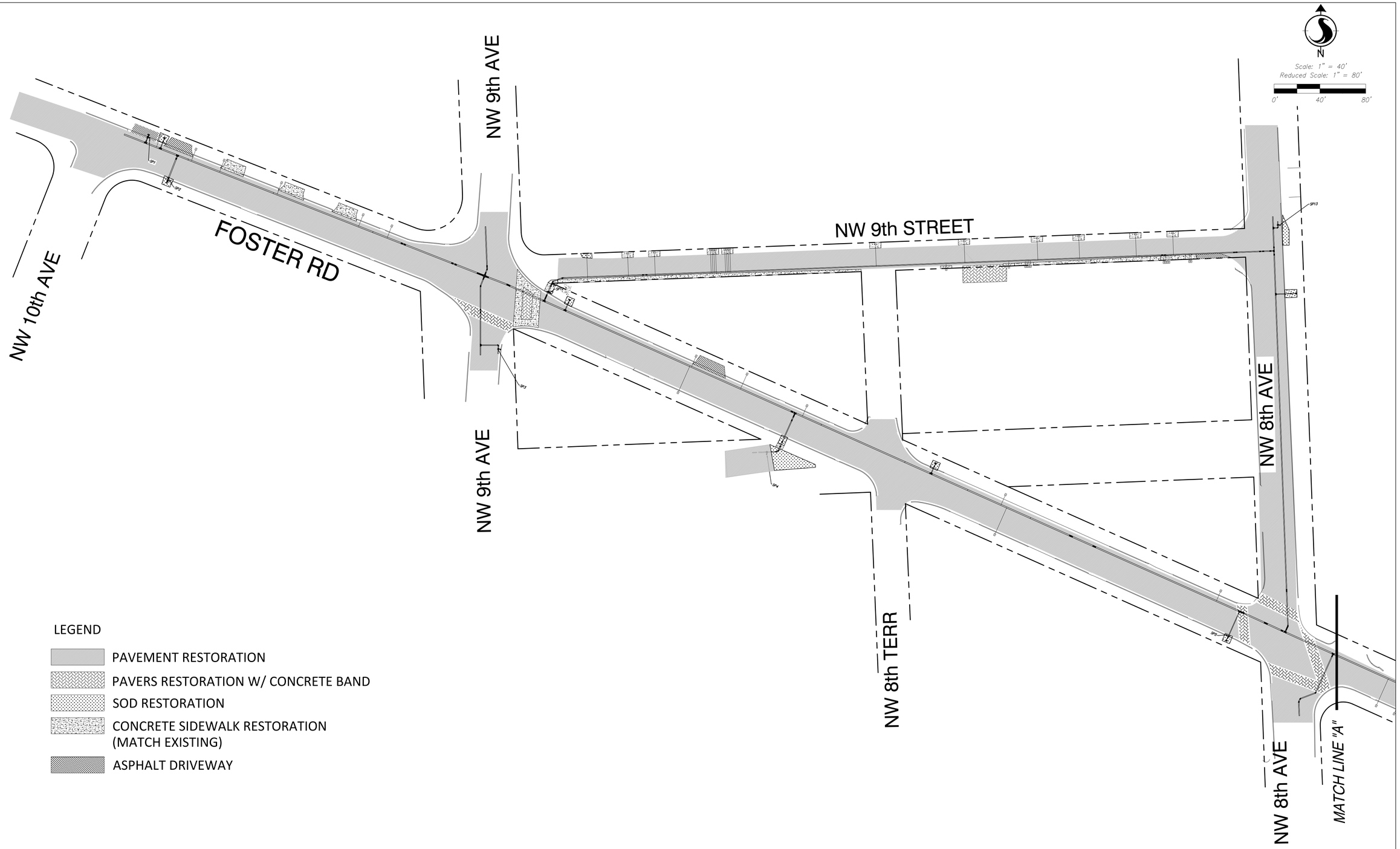

LEGEND

- PAVEMENT RESTORATION
- PAVERS RESTORATION W/ CONCRETE BAND
- SOD RESTORATION
- CONCRETE SIDEWALK RESTORATION (MATCH EXISTING)
- ASPHALT DRIVEWAY

V:\1773\active\177311197\drawings\civil\177311197_pavement Restoration.dwg
2020/02/07 4:37 PM By: Robaina, Eduardo

Revision	By	Appd.	YY.MM.DD

Issued	By	Appd.	YY.MM.DD

Seal

DAVE CLARKE, P.E.
State of Florida - License No. 66553

Consultants

Stantec
901 Ponce de Leon Blvd. Suite 900
Coral Gables, Florida 33134
www.stantec.com

The Contractor shall verify and be responsible for all dimensions. DO NOT scale the drawing - any errors or omissions shall be reported to Stantec without delay.
The Copyrights to all designs and drawings are the property of Stantec. Reproduction or use for any purpose other than that authorized by Stantec is forbidden.

CITY OF HALLANDALE BEACH
12" WATER MAIN ALONG FOSTER RD
CITY OF HALLANDALE BEACH, FLORIDA

File Name:	ER	DC	LF	19.07.31
	Dwn.	Chkd.	Dsgn.	YY.MM.DD

PAVEMENT RESTORATION

Project No.	Scale	
177311197	AS NOTED	
Drawing No.	Sheet	Revision
	C-17	

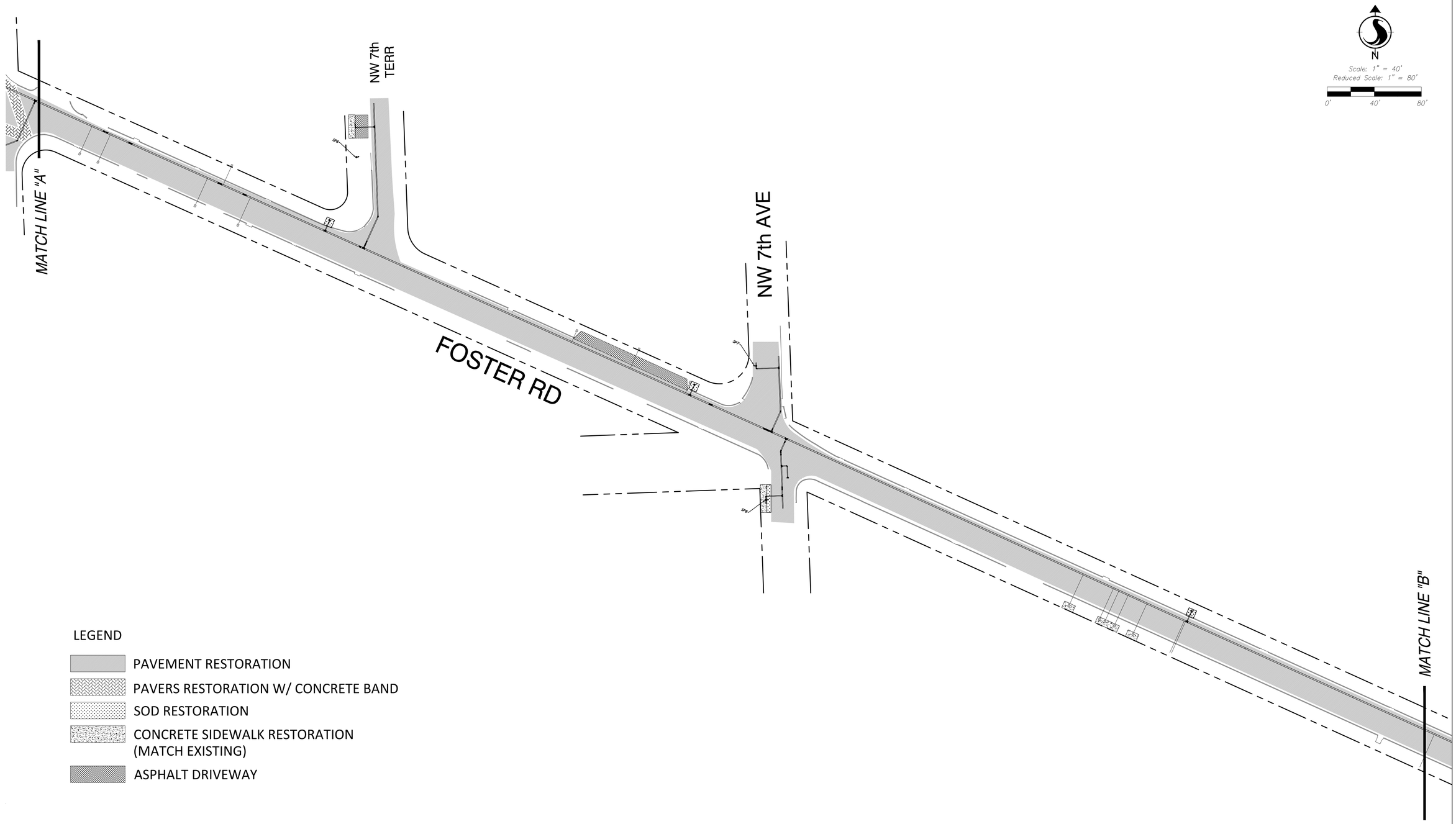

LEGEND

- PAVEMENT RESTORATION
- PAVERS RESTORATION W/ CONCRETE BAND
- SOD RESTORATION
- CONCRETE SIDEWALK RESTORATION (MATCH EXISTING)
- ASPHALT DRIVEWAY

Revision	By	Appd.	YY.MM.DD

Issued	By	Appd.	YY.MM.DD

Seal

DAVE CLARKE, P.E.
State of Florida - License No. 66553

Consultants

Stantec
901 Ponce de Leon Blvd. Suite 900
Coral Gables, Florida 33134
www.stantec.com

The Contractor shall verify and be responsible for all dimensions. DO NOT scale the drawing - any errors or omissions shall be reported to Stantec without delay.
The Copyrights to all designs and drawings are the property of Stantec. Reproduction or use for any purpose other than that authorized by Stantec is forbidden.

CITY OF HALLANDALE BEACH
12" WATER MAIN ALONG FOSTER RD
CITY OF HALLANDALE BEACH, FLORIDA

File Name:	ER	DC	LF	19.07.31
	Dwn.	Chkd.	Dsgn.	YY.MM.DD

PAVEMENT RESTORATION

Project No.	Scale	
177311197	AS NOTED	
Drawing No.	Sheet	Revision
	C-18	

y:\1773\active\177311197\drawings\civil\177311197_pavement Restoration.dwg
2020/02/07 4:37 PM By: Robaina, Eduardo

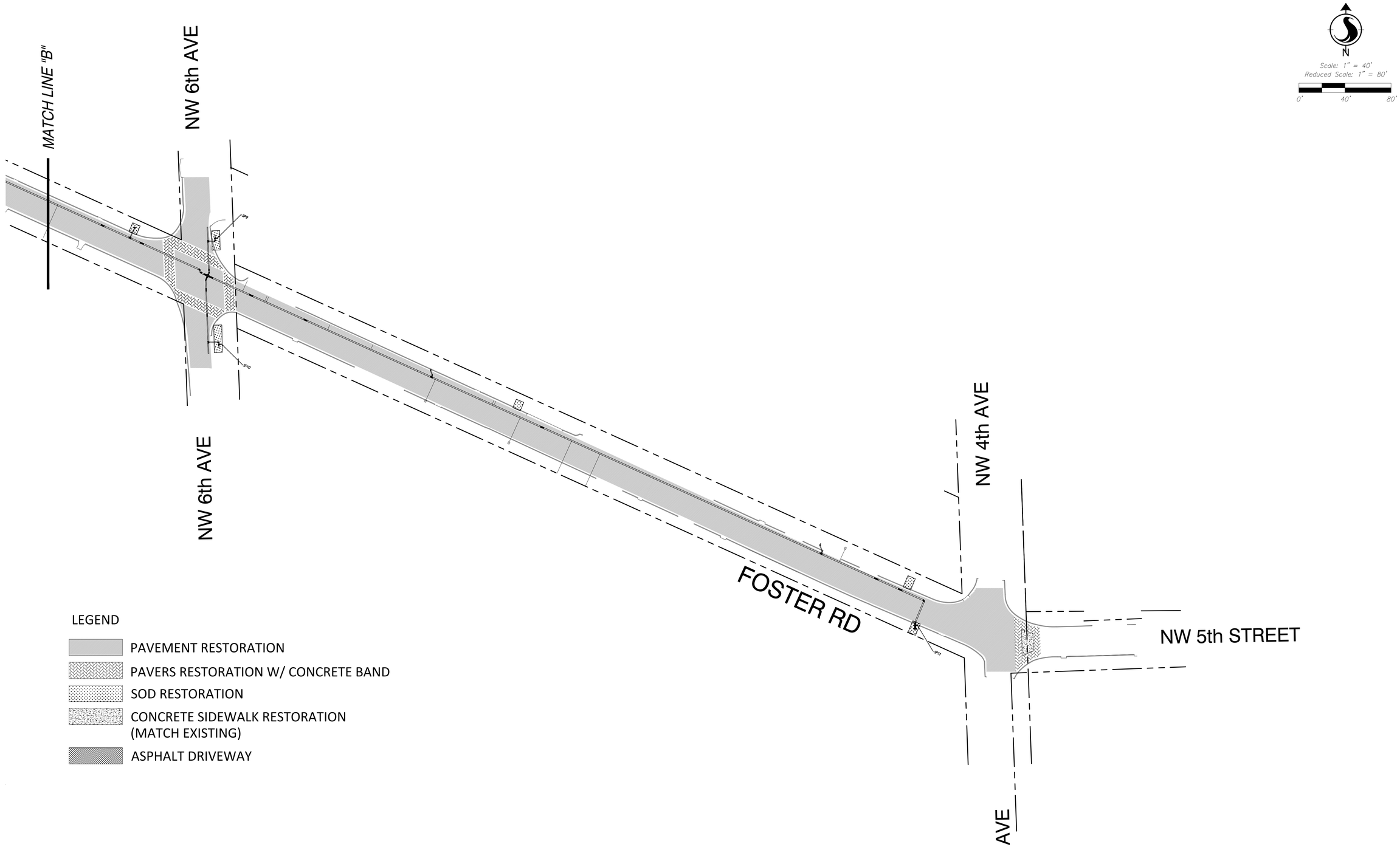

Revision	By	Appd.	YY.MM.DD

Issued	By	Appd.	YY.MM.DD

Seal

DAVE CLARKE, P.E.
State of Florida - License No. 66553

Consultants

Stantec
901 Ponce de Leon Blvd. Suite 900
Coral Gables, Florida 33134
www.stantec.com

The Contractor shall verify and be responsible for all dimensions. DO NOT scale the drawing - any errors or omissions shall be reported to Stantec without delay.
The Copyrights to all designs and drawings are the property of Stantec. Reproduction or use for any purpose other than that authorized by Stantec is forbidden.

CITY OF HALLANDALE BEACH
12" WATER MAIN ALONG FOSTER RD
CITY OF HALLANDALE BEACH, FLORIDA

File Name:	ER	DC	LF	19.07.31
	Dwn.	Chkd.	Dsgn.	YY.MM.DD

PAVEMENT RESTORATION

Project No.	Scale	
177311197	AS NOTED	
Drawing No.	Sheet	Revision
	C-19	

V:\1773\active\177311197\drawings\civil\177311197_pavement Restoration.dwg
2020/02/07 4:38 PM By: Robalino, Eduardo

NEW WATER METERS SCHEDULE

METER	PAGE	STATION	OFFSET	BASELINE	WATER SERVICE	WATER METER	LENGTH (LF) 1"	LENGTH (LF) 2"	
M1	C-01	10+48.26	23.06'LT	FOSTER RD	1"	5/8"	15'		
M2	C-01	10+72.25	23.05'LT	FOSTER RD	1"	5/8"	15'		
M3	C-01	11+09.49	23.05'LT	FOSTER RD	1"	5/8"	10'		
M4	C-01	11+63.35	23.05'LT	FOSTER RD	1"	5/8"	10'		
M5	C-01	12+39.84	23.05'LT	FOSTER RD	1"	5/8"	10'		
M6	C-01	12+66.73	23.08'LT	FOSTER RD	1"	5/8"	10'		
M7	C-02	15+55.91	23.05'LT	FOSTER RD	1"	5/8"	10'		
M8	C-02	15+54.38	23.05'RT	FOSTER RD	1"	5/8"	31'		
M9	C-02	16+07.81	23.06'LT	FOSTER RD	1"	5/8"	15'		
M10	C-02	16+60.17	23.05'LT	FOSTER RD	1"	5/8"	10'		
M11	C-02	18+57.45	23.05'RT	FOSTER RD	1"	5/8"	31'		
M12	C-02	18+51.92	23.05'LT	FOSTER RD	1"	5/8"	10'		
M13	C-03	20+58.13	23.05'LT	FOSTER RD	1"	5/8"	10'		
M14	C-03	22+22.93	23.05'RT	FOSTER RD	1"	5/8"	25'		
M15	C-03	22+40.04	23.05'RT	FOSTER RD	1"	5/8"	25'		
M16	C-03	23+30.55	23.05'RT	FOSTER RD	1"	5/8"	25'		
M17	C-03	23+45.79	23.05'LT	FOSTER RD	1"	5/8"	10'		
M18	C-03	23+69.42	23.05'RT	FOSTER RD	1"	5/8"	25'		
M19	C-04	26+69.98	23.05'LT	FOSTER RD	1"	5/8"	10'		
M20	C-04	27+75.79	23.05'LT	FOSTER RD	1"	5/8"	10'		
M21	C-05	31+48.08	23.11'RT	FOSTER RD	1"	5/8"	25'		
M22	C-05	31+76.51	23.05'RT	FOSTER RD	1"	5/8"	25'		
M23	C-05	31+81.41	23.08'RT	FOSTER RD	1"	5/8"	25'		
M24	C-05	31+90.15	23.07'RT	FOSTER RD	1"	5/8"	25'		
M25	C-05	32+07.57	23.05'RT	FOSTER RD	1"	5/8"	25'		
M26	C-04	27+25.20	24.86'LT	FOSTER RD	1"	5/8"	18'		
M27	C-06	38+37.24	13.90'RT	FOSTER RD	1"	5/8"	20'		
M28	C-09	65+21.85	0.98"RT	FOSTER RD	1"	5/8"	6'		
	C-05			FOSTER RD	1"	5/8"	31'		ONLY WATER SERVICE LINE
	C-05			FOSTER RD	1"	5/8"	31'		ONLY WATER SERVICE LINE
	C-06			FOSTER RD	1"	5/8"	31'		ONLY WATER SERVICE LINE
	C-06			FOSTER RD	1"	5/8"	10'		ONLY WATER SERVICE LINE
	C-06			FOSTER RD	1"	5/8"	17'		ONLY WATER SERVICE LINE
	C-06			FOSTER RD	1"	5/8"	17'		ONLY WATER SERVICE LINE
	C-06			FOSTER RD	1"	5/8"	10'		ONLY WATER SERVICE LINE

METER	PAGE	STATION	OFFSET	BASELINE	WATER SERVICE	WATER METER	LENGTH (LF) 1"	LENGTH (LF) 2"	
	C-06			FOSTER RD	1"	5/8"	10'		ONLY WATER SERVICE LINE
M34	C-06	38+82.49	23.05'RT	FOSTER RD	1"	5/8"	25'		
	C-06			FOSTER RD	1"	5/8"	10'		ONLY WATER SERVICE LINE
	C-06			FOSTER RD	1"	5/8"	17'		ONLY WATER SERVICE LINE
	C-07	39+60.00	23.05'RT	FOSTER RD	1"	5/8"	25'		NEW DEVELOPER WILL INSTALL WATER METER AND BOX
	C-07	39+85.61	23.05'RT	FOSTER RD	1"	5/8"	25'		NEW DEVELOPER WILL INSTALL WATER METER AND BOX
M41	C-07	42+22.13	23.05'LT	FOSTER RD	1"	5/8"	10'		
M43	C-08	59+94.58	23.04'LT	NW 9TH STREET	1"	5/8"	20'		
M44	C-08	60+30.27	23.04'LT	NW 9TH STREET	1"	5/8"	20'		
M45	C-08	60+53.68	23.04'LT	NW 9TH STREET	1"	5/8"	19'		
M46	C-08	61+02.62	23.04'LT	NW 9TH STREET	1"	5/8"	19'		
M47	C-08	61+04.12	23.04'LT	NW 9TH STREET	1"	5/8"	19'		
M48	C-08	61+05.61	23.04'LT	NW 9TH STREET	1"	5/8"	19'		
M49	C-08	61+07.11	23.04'LT	NW 9TH STREET	1"	5/8"	19'		
M50	C-08	61+15.15	23.04'LT	NW 9TH STREET	1"	5/8"	19'		
M51	C-08	61+16.65	23.04'LT	NW 9TH STREET	1"	5/8"	19'		
M52	C-08	61+18.14	23.04'LT	NW 9TH STREET	1"	5/8"	19'		
M53	C-08	61+19.64	23.04'LT	NW 9TH STREET	1"	5/8"	19'		
M54	C-08	62+46.83	23.04'LT	NW 9TH STREET	1"	5/8"	19'		
M55	C-08	63+07.87	0.01'RT	NW 9TH STREET	1"	5/8"	5'		
M56	C-08	63+24.32	23.06'LT	NW 9TH STREET	1"	5/8"	19'		
M57	C-09	63+62.69	0.01'RT	NW 9TH STREET	1"	5/8"	5'		
M58	C-09	63+77.08	0.01'RT	NW 9TH STREET	1"	5/8"	5'		
M59	C-09	63+78.58	0.01'RT	NW 9TH STREET	1"	5/8"	5'		
M60	C-09	63+80.08	0.01'RT	NW 9TH STREET	1"	5/8"	5'		
M61	C-09	63+81.58	0.01'RT	NW 9TH STREET	1"	5/8"	5'		
M62	C-09	63+88.10	23.05'LT	NW 9TH STREET	1"	5/8"	19'		
M63	C-09	64+24.56	23.07'LT	NW 9TH STREET	1"	5/8"	19'		
M64	C-09	64+74.12	23.07'LT	NW 9TH STREET	1"	5/8"	19'		
M65	C-09	64+98.03	0.97'RT	NW 9TH STREET	1"	5/8"	6'		
M66	C-09	64+99.53	0.97'RT	NW 9TH STREET	1"	5/8"	6'		
M67	C-09	65+01.03	0.96'RT	NW 9TH STREET	1"	5/8"	6'		
M68	C-09	65+02.53	0.97'RT	NW 9TH STREET	1"	5/8"	6'		
M69	C-09	65+06.65	23.05'LT	NW 9TH STREET	1"	5/8"	19'		
M70	C-09	65+21.85	0.98'RT	NW 9TH STREET	1"	5/8"	6'		

Revision | By | Appd. | YY.MM.DD

Issued | By | Appd. | YY.MM.DD

Seal

DAVE CLARKE, P.E.
State of Florida - License No. 66553

Consultants

Stantec
901 Ponce de Leon Blvd. Suite 900
Coral Gables, Florida 33134
www.stantec.com

The Contractor shall verify and be responsible for all dimensions. DO NOT scale the drawing - any errors or omissions shall be reported to Stantec without delay.
The Copyrights to all designs and drawings are the property of Stantec. Reproduction or use for any purpose other than that authorized by Stantec is forbidden.

CITY OF HALLANDALE BEACH
12" WATER MAIN ALONG FOSTER RD
CITY OF HALLANDALE BEACH, FLORIDA

File Name: | ER Dwn. | DC Chkd. | LF Dsgn. | 19.07.31 YY.MM.DD

WATER SERVICE SCHEDULE

Project No. 177311197 | Scale NTS
Drawing No. | Sheet C-20 | Revision

Y:\1773\active\177311197\drawings\civil\177311197_tables.dwg
2020/02/07 4:38 PM By: Robaina, Eduardo

CONFLICTS TABLE

CONFLICT NUMBER	SHEET NO.	EXISTING CONFLICT PIPE INFORMATION				PROPOSED PIPE INFORMATION		
		TYPE	DIAM.	MATERIAL	ELEV.	DIAM.	CROSSING TYPE	CLEARANCE
1	C-01	BT	N/A	COPPER	T.O.P 10.57	12-inch	NOT IN CONFLICT	48 in
2	C-01	STRM	15"	CORRUGATED METAL	B.O.P 7.39	12-inch	CROSS UNDER WITH 45deg BENDS	12 in
3	C-01	WM	8"	N/A	T.O.P 9.73	12-inch	CROSS UNDER WITH 45deg BENDS	12 in
4	C-01	STRM	54"	N/A	T.O.P 3.50	12-inch	NOT IN CONFLICT	36 in
5	C-01	BFO	2-1.5"	HDPE	T.O.P 11.00	12-inch	NOT IN CONFLICT	12 in
6	C-02	WM	6"	N/A	T.O.P 10.25	12-inch	NOT IN CONFLICT	6 in
8	C-03	RAW WM	12"	DIP	T.O.P 7.50	12-inch	CROSS UNDER WITH 45deg BENDS	12 in
9	C-03	BE	N/A	N/A	T.O.P 7.75	12-inch	CROSS UNDER WITH 45deg BENDS	12 in
10	C-03	SAN.	10"	PVC	B.O.P 0.23	12-inch	NOT IN CONFLICT	60 in
11	C-03	BE	2-4"	PLASTIC	T.O.P 8.10	12-inch	NOT IN CONFLICT	6 in
12	C-03	SAN.	30"	CLAY	B.O.P -7.96	12-inch	NOT IN CONFLICT	144 in
13	C-04	SAN.	10"	C.I.P.P LINER	B.O.P 2.36	12-inch	CROSS ABOVE WITH 45deg BENDS	12 in
14	C-04	RAW WM	12"	DIP	T.O.P 4.47	12-inch	CROSS ABOVE WITH 45deg BENDS	12 in
15	C-04	GAS	4"	PLASTIC PE	T.O.P 6.42	12-inch	CROSS UNDER WITH 45deg BENDS	12 in
16	C-04	SAN.	12"	CLAY	B.O.P -7.45	12-inch	NOT IN CONFLICT	132 in
17	C-04	WM	6"	N/A	T.O.P 7.33	12-inch	CROSS UNDER WITH 45deg BENDS	12 in
18	C-04	BT	N/A	COPPER	T.O.P 8.05	12-inch	NOT IN CONFLICT	6 in
19	C-06	SAN.	10"	CLAY	B.O.P 4.74	12-inch	CROSS ABOVE WITH 45deg BENDS	18 in
20	C-06	WM	8"	N/A	T.O.P 8.50	12-inch	CROSS UNDER WITH 45deg BENDS	12 in
21	C-07	SAN.	20"	C.I.P.P. LINER	B.O.P -5.30	12-inch	NOT IN CONFLICT	N/A
21A	C-07	GAS	4"	PLASTIC PE	T.O.P 7.65	12-inch	NOT IN CONFLICT	12 in
22	C-08	WM	6"	N/A	T.O.P 10.25	8-inch	CROSS UNDER WITH 45deg BENDS	12 in
23	C-08	RAW WM	12"	DIP	T.O.P 10.50	8-inch	CROSS UNDER WITH 45deg BENDS	12 in
24	C-09	BE	N/A	N/A	T.O.P 6.50	8-inch	CROSS UNDER WITH 45deg BENDS	12 in
25	C-09	SAN.	10"	PVC	B.O.P 1.97	8-inch	CROSS ABOVE WITH 45deg BENDS	18 in
26	C-10	BT	N/A	COPPER	T.O.P 8.45	8-inch	NOT IN CONFLICT	12 in
27	C-10	WM	4"	N/A	T.O.P 7.82	8-inch	NOT IN CONFLICT	6 in
28	C-10	STRM	15"	CORRUGATED METAL	B.O.P 6.98	8-inch	CROSS UNDER WITH 45deg BENDS	12 in
29	C-10	WM	6"	N/A	T.O.P 7.50	8-inch	CROSS UNDER WITH 45deg BENDS	12 in
30	C-10	SAN.	12"	CLAY	B.O.P -5.72	8-inch	NOT IN CONFLICT	96 in
31	C-10	RAW WM	24"	DIP	T.O.P 4.70	8-inch	NOT IN CONFLICT	12 in
32	C-11	BFO	2-1.5"	HDPE	T.O.P 9.00	12-inch	CROSS UNDER WITH 45deg BENDS	12 in
33	C-11	RAW WM	12"	DIP	T.O.P 9.50	12-inch	CROSS UNDER WITH 45deg BENDS	12 in
34	C-11	WM	6"	N/A	T.O.P 9.50	12-inch	NOT IN CONFLICT	12 in

CONFLICT NUMBER	SHEET NO.	EXISTING CONFLICT PIPE INFORMATION				PROPOSED PIPE INFORMATION		
		TYPE	DIAM.	MATERIAL	B.O.P	DIAM.	CROSSING TYPE	CLEARANCE
35	C-11	SAN.	12"	CLAY	B.O.P -9.87	8-inch	NOT IN CONFLICT	108 in
36	C-11	RAW WM	24"	DIP	T.O.P 11.00	8-inch	CROSS UNDER WITH 45deg BENDS	12 in
37	C-11	STRM	15"	CORRUGATED METAL	B.O.P 8.11	8-inch	CROSS ABOVE WITH 45deg BENDS	6 in
38	C-12	FM	16"	N/A	T.O.P 0.75	8-inch	NOT IN CONFLICT	18 in
39	C-12	STRM	15"	CORRUGATED METAL	B.O.P 4.80	8-inch	CROSS UNDER WITH 45deg BENDS	12 in
40	C-12	WM	6"	N/A	T.O.P 5.75	8-inch	CROSS UNDER WITH 45deg BENDS	12 in
41	C-13	SAN.	12"	CLAY	B.O.P -5.34	8-inch	NOT IN CONFLICT	144 in
42	C-13	SAN.	20"	C.I.P.P LINER	B.O.P -7.29	8-inch	NOT IN CONFLICT	84 in
43	C-13	GAS	4"	PLASTIC PE	T.O.P 6.97	8-inch	CROSS UNDER WITH 45deg BENDS	12 in
44	C-13	RAW WM	12"	DIP	T.O.P 7.00	8-inch	CROSS UNDER WITH 45deg BENDS	12 in
45	C-13	WM	6"	N/A	T.O.P 6.75	8-inch	CROSS UNDER WITH 45deg BENDS	12 in
46	C-13	SAN.	12"	CLAY	B.O.P -4.54	8-inch	NOT IN CONFLICT	120 in
47	C-14	SAN.	8"	CLAY	B.O.P 4.14	8-inch	NOT IN CONFLICT	18 in
47	C-14	SAN.	10"	CLAY	B.O.P -3.89	8-inch	NOT IN CONFLICT	120 in
47	C-14	SAN.	20"	C.I.P.P LINER	B.O.P -0.34	8-inch	NOT IN CONFLICT	84 in
48	C-14	WM	6"	N/A	B.O.P 8.25	8-inch	CROSS UNDER WITH 45deg BENDS	12 in
49	C-14	GAS	4"	PLASTIC PE	T.O.P 9.55	8-inch	CROSS UNDER WITH 45deg BENDS	12 in
50	C-14	BTV	N/A	N/A	T.O.P 9.55	8-inch	CROSS UNDER WITH 45deg BENDS	12 in
51	C-01	RAW WM	24"	DIP	T.O.P 7.80	10-inch	NOT IN CONFLICT	18 in
52	C-01	SAN.	12"	CLAY	T.O.P 0.50	10-inch	NOT IN CONFLICT	34 in
53	C-02	SAN.	12"	CLAY	T.O.P 0.50	8-inch	NOT IN CONFLICT	120 in
54	C-02	RAW WM	24"	DIP	T.O.P 9.10	8-inch	CROSS UNDER WITH 45deg BENDS	12 in

NOTES:

1. ALL UTILITIES CROSSING SHALL FOLLOW BROWARD STANDARD DETAIL 105
2. ALL 6" SEWER LATERAL CROSSINGS SHALL BE MINIMUM 18 INCHES WHERE PROPOSED WATER MAIN CROSSES BENEATH AND 12 INCHES MINIMUM WHERE IT CROSSES ABOVE.

The Contractor shall verify and be responsible for all dimensions. DO NOT scale the drawing - any errors or omissions shall be reported to Stantec without delay.
The Copyrights to all designs and drawings are the property of Stantec. Reproduction or use for any purpose other than that authorized by Stantec is forbidden.

V:\1773\active\177311197\drawings\civil\177311197_tables.dwg
2020/02/07 4:38 PM By: Robaina, Eduardo

MAINTENANCE OF TRAFFIC NOTES

1. THE CONTRACTOR SHALL DEVELOPED AND OBTAIN APPROVAL FOR MAINTENANCE OF TRAFFIC (MOT) PLANS FOR THIS PROJECT. THE MOT PLAN SHALL CONFORM TO THE LATEST EDITION OF FDOT'S DESIGN STANDARDS AND THE MANUAL OF UNIFORM TRAFFIC CONTROL DEVICES (MUTCD) FOR STREETS AND HIGHWAYS. COMPLIANCE WITH THE REQUIREMENTS OF THE APPROVED PLAN ARE THE RESPONSIBILITY OF THE CONTRACTOR.
2. TRAFFIC CONTROLS SHALL BE IN ACCORDANCE WITH THE PROJECT PLANS, THE MIAMI-DADE COUNTY PUBLIC WORKS MANUAL AS PERTAINS TO MAINTENANCE OF TRAFFIC, THE CURRENT EDITION OF THE FLORIDA DOT DESIGN STANDARDS (600 SERIES), THE STANDARD SPECIFICATION FOR ROAD AND BRIDGE CONSTRUCTION, AND THE MANUAL OF UNIFORM TRAFFIC CONTROL DEVICES AS MINIMUM CRITERIA.
3. THE CONTRACTOR SHALL DEVELOP MAINTENANCE OF TRAFFIC PLAN OF HIS OWN, MEETING THE REQUIREMENTS SPECIFIED IN THE MANUAL OF UNIFORM TRAFFIC CONTROL DEVICES LATEST EDITION AND THE FDOT INDEX 600 SERIES. THE CONTRACTOR'S MAINTENANCE OF TRAFFIC PLANS SHALL BE SUBMITTED TO THE ENGINEER FOR REVIEW AND APPROVAL PRIOR TO START OF CONSTRUCTION. THE PLANS SHALL BE SIGNED AND SEALED BY A PROFESSIONAL ENGINEER REGISTERED IN THE STATE OF FLORIDA.
4. THE CONTRACTOR SHALL IMMEDIATELY REPAIR ALL POTHOLES THAT DEVELOP WITHIN THE PROJECT LIMITS AND WILL MAINTAIN A SUPPLY OF COLD MIX ON THE PROJECT SITE TO EXPEDITE THOSE REPAIRS. COST OF REPAIR TO BE INCLUDED IN PAY ITEM 102-1-1, MAINTENANCE OF TRAFFIC.
5. NOTIFICATION OF LANE CLOSURES OR TEMPORARY DETOURS SHALL BE ACCOMPLISHED 14 WORKING DAYS PRIOR TO CLOSURE OR DETOUR BY COORDINATING WITH BROWARD COUNTY PUBLIC WORKS DEPARTMENT AND BROWARD COUNTY TRAFFIC OPERATIONS.
6. THE CONTRACTOR SHALL NOTIFY LAW ENFORCEMENT AND FIRE PROTECTION SERVICES TWENTY-FOUR (24) HOURS IN ADVANCE OF A DETOUR IN ACCORDANCE WITH SECTION 336.07 OF THE FLORIDA STATUTES.
7. THE DISCRETION OF THE ENGINEER, IF A LANE CLOSURE CAUSES EXTENDED CONGESTION OR DELAY, THE CONTRACTOR SHALL BE DIRECTED TO REOPEN THE CLOSED LANE(S) UNTIL SUCH TIME THAT THE TRAFFIC FLOW HAS RETURNED TO AN ACCEPTABLE LEVEL.
8. THE TRAFFIC AND TRAVEL WAYS SHALL NOT BE ALTERED BY THE CONTRACTOR TO CREATE A WORK ZONE UNTIL ALL LABOR AND MATERIAL ARE AVAILABLE FOR THE CONSTRUCTION IN THAT AREA.
9. REGULATORY SPEED ESTABLISHED WITHIN THE WORK ZONE TRAVEL WAYS SHALL BE 20 M.P.H. REDUCED SPEED AND REGULATORY SPEED SIGNS SHALL BE INSTALLED ON SEPARATE POSTS IN ACCORDANCE WITH THE STANDARD INDEXES.
10. CONTRACTOR SHALL MAINTAIN ACCESS TO PRIVATE PROPERTY DURING ALL PHASES OF CONSTRUCTION. LOCAL RESIDENTS WITHIN THE AREA OF CONSTRUCTION SHALL BE GIVEN ACCESS TO THEIR PROPERTY DURING ALL PHASES OF CONSTRUCTION. LOCAL RESIDENTS INCLUDE ALL COMMERCIAL ESTABLISHMENTS AND BUSINESSES.
11. AS DETERMINED BY THE ENGINEER, THE CONTRACTOR SHALL COVER WORK ZONE SIGNS WHEN CONDITIONS NO LONGER WARRANT THEIR USE. COST OF COVERING AND UNCOVERING THE SIGNS SHALL BE INCLUDED IN PAY ITEM 102-1-1, MAINTENANCE OF TRAFFIC.
12. CONTRACTOR SHALL REMOVE, RELOCATE, OR COVER ANY EXISTING OR PROPOSED SIGNS THAT CONFLICT WITH THE TRAFFIC CONTROL PLANS. WHEN THE CONFLICT NO LONGER EXISTS, THE CONTRACTOR SHALL RESTORE THE SIGNS TO THEIR ORIGINAL POSITION. COST OF TEMPORARILY REMOVING, RELOCATION, COVERING, AND RESTORING THE SIGNS SHALL BE INCLUDED IN THE PAY ITEM 102-1-1, MAINTENANCE OF TRAFFIC.
13. EACH EXISTING STREET NAME AND TRAFFIC SIGN AFFECTED BY CONSTRUCTION SHALL BE RELOCATED AND MAINTAINED IN AN APPROPRIATE LOCATION FOR THE DURATION OF THE PROJECT. WHEN NO LONGER AFFECTED BY CONSTRUCTION, THESE SIGNS SHALL BE RESTORED IN THEIR ORIGINAL POSITION. COST OF TEMPORARILY RELOCATING AND RESTORING THE SIGNS SHALL BE INCLUDE IN PAY ITEM 102-1-1, MAINTENANCE OF TRAFFIC.
14. CONTRACTOR SHALL BE RESPONSIBLE FOR THE IMMEDIATE REMOVAL OF STORM WATER FROM ROADWAYS UTILIZED FOR MAINTAINING TRAFFIC IN A MANNER APPROVED BY THE ENGINEER. COST OF REMOVING THE WATER SHALL BE INCLUDED IN PAY ITEM 102-1-1, MAINTENANCE OF TRAFFIC.
15. FOR DROP-OFF, THE CONTRACTOR'S ATTENTION IS DIRECTED TO FDOT STANDARD INDEX NO. 600, SHEET 6 OF 10. THE CONTRACTOR SHALL USE SHOULDER TREATMENT DETAIL WHEN NO BARRIERS ARE REQUIRED IN THE PLANS.
16. DURING ASPHALT CONSTRUCTION OPERATIONS, NO MORE THAN 11/4" DROP-OFF BETWEEN ADJACENT TRAVEL LANES OR AT TRANSVERSE JOINTS SHALL BE ALLOWED WHEN LANES ARE OPEN TO TRAFFIC. WHERE DROP OFF CONDITIONS EXIST, THE SIGNING FOR UNEAVEN PAVEMENT SHALL BE INSTALLED FOR THE DURATION OF THE CONDITION (W8-9AP).
17. AT ALL INTERSECTING STREETS, NO LESS THAN ONE "ROAD CONSTRUCTION AHEAD" SIGN AND ONE "END CONSTRUCTION" SIGN MUST BE INSTALLED. (TWO EACH FOR STREETS WITH MEDIAN.)
18. TRAFFIC SHALL BE MAINTAINED ON A PAVED, DUST-FREE SURFACE AT ALL TIMES. COORDINATION WITH BROWARD COUNTY PUBLIC WORKS DEPARTMENT AND THE CITY OF HALLANDALE BEACH WILL BE REQUIRED.
19. CONTRACTOR SHALL BE RESPONSIBLE TO PROVIDE EROSION CONTROL MEASURES TO PREVENT CLOG OF PROPOSED DRAINAGE STRUCTURES AND SEDIMENT INTRUSION ON WATERWAYS DURING CONSTRUCTION. THESE MEASURES SHALL BE APPROVED BY THE ENGINEER AND CONFORM WITH CURRENT EDITION OF THE FDOT DESIGN STANDARDS FOR EROSION CONTROL (100 SERIES).
20. CONTRACTOR MUST MAINTAIN DRAINAGE AT ALL TIMES. THE EXISTING DRAINAGE SYSTEM SHALL BE KEPT OPERATIONAL OR TEMPORARY DRAINAGE PROVIDED WHILE THE PROPOSED DRAINAGE SYSTEM IS BEING CONSTRUCTED. THE CONTRACTOR SHALL PROVIDE THE NECESSARY TEMPORARY DRAINAGE AS APPROVED BY THE ENGINEER. ALL COSTS SHALL BE INCLUDED IN THE PAY ITEM 102-1-1, MAINTENANCE OF TRAFFIC.
21. THE CONTRACTOR SHALL FURNISH AND MAINTAIN VARIABLE MESSAGE SIGNS AS DIRECTED BY THE ENGINEER. MESSAGES FOR THE VMS SHALL BE DIRECTED BY THE ENGINEER. THE VMS SHALL BE IN PLACE ONE WEEK BEFORE THE START OF ANY WORK ITEMS AFFECTING THE EXISTING VEHICULAR AND PEDESTRIAN TRAFFIC. VMS INSTALLATION, OPERATION, AND REMOVAL TO BE INCLUDED IN THE PAY ITEM 102-1-1, MAINTENANCE OF TRAFFIC.
22. THE CONTRACTOR MUST PROVIDE FLASHING ARROW BOARD FOR ANY LANE THAT IS CLOSED OR DIVERTED.

MAINTENANCE OF TRAFFIC NOTES (SCHOOL/PEDESTRIAN)

1. THE MAINTENANCE OF TRAFFIC PLAN, PROVIDED BY THE CONTRACTOR SHALL INCLUDE PROVISIONS FOR PEDESTRIAN AND/OR SCHOOL STUDENT TRAFFIC AS WELL AS VEHICULAR TRAFFIC. THE FOLLOWING ARE MINIMUM REQUIREMENTS.
2. THE SAFE WALK ROUTE FOR ALL SCHOOL STUDENTS WITHIN THE VICINITY OF THE CONSTRUCTION ZONE SHALL BE MAINTAINED DURING THE TIMES STUDENTS ARE ARRIVING AT OR LEAVING SCHOOL. IF THE CURRENT WALKING SURFACE CANNOT BE MAINTAINED, THEN A TEMPORARY ROAD-ROCK 4' WALK WAY SHALL BE CREATED. THE SAFE WALK ROUTE SHALL BE SEPARATED FROM THE CONSTRUCTION ACTIVITY BY THE 4' HIGH ORANGE CONSTRUCTION FENCE FOR THE ENTIRE LENGTH OF THE PROJECT OR THE LENGTH OF THE WALK ROUTE, WHICHEVER IS LESS.
3. ALL CONSTRUCTION EQUIPMENT AROUND ANY DESIGNATED CROSSWALK SHALL CEASE TO OPERATE DURING THE TIMES STUDENTS ARE ARRIVING AT OR LEAVING SCHOOL. ALL CONSTRUCTION EQUIPMENT ADJACENT TO A DESIGNATED WALK SHALL CEASE OPERATING UNLESS SATISFACTORILY BARRICADED FROM THE WALK ROUTE.
4. IN CASE THAT A DESIGNATED CROSSING OR ANY PORTION OF THE DESIGNATED WALK ROUTE CANNOT BE MAINTAINED, THEN THE CONTRACTOR SHALL NOTIFY THE SPECIAL PROJECTS COORDINATOR AT BROWARD COUNTY TRAFFIC ENGINEERING DIVISION AT (954) 847-2671, A MINIMUM OF TEN (10) WORKING DAYS PRIOR TO CLOSING THAT ROUTE IN ORDER THAT AN ALTERNATE CROSSING/ROUTE CAN BE ESTABLISHED.
5. IT SHALL BE THE CONTRACTOR'S RESPONSIBILITY TO PROVIDE STATE CERTIFIED SCHOOL CROSSING GUARDS OR OFF DUTY POLICE OFFICERS TO CROSS STUDENTS AT ANY LOCATIONS OTHER THAN THOSE PREVIOUSLY DESIGNATED. THE CONTRACTOR MAY USE FLAGMEN, ONLY IF THEY ARE STATE CERTIFIED AS A SCHOOL CROSSING GUARD.
6. THIRTY (30) DAYS PRIOR TO THE BEGINNING OF CONSTRUCTION THE CONTRACTOR SHALL NOTIFY THE SPECIAL PROJECTS COORDINATOR AT BROWARD COUNTY TRAFFIC ENGINEERING DIVISION AT (954) 847-2671, TO ARRANGE A PRE-CONSTRUCTION - SCHOOL SAFETY MEETING.
7. IT SHALL BE THE CONTRACTOR'S RESPONSIBILITY TO NOTIFY THE BROWARD COUNTY SCHOOL BOARD PUPIL TRANSPORTATION DEPARTMENT TO ARRANGE A PRE-CONSTRUCTION SCHOOL BUS ROUTE MEETING AT THE FOLLOWING:
   - 7.1. RUTH MASTERS - ROUTING (754) 321-4400 EXT. 2309 RUTH.MASTERS@BROWARDSCHOOLS.COM
   - 7.2. CAROL CASCIO - ROUTING (754) 321-4400 CCASCIO@BROWARDSCHOOLS.COM
   - 7.3. CAROLYN GERMAN - STUDENT TRANSPORTATION & FLEET SERVICE (754) 321-4488 CAROLYN.GERMAN@BROWARDSCHOOLS.COM
   - 7.4. MARY TOCHTERMANN - STUDENT TRANSPORTATION & FLEET SERVICE (754) 321-4400 EXT. 2006 MARY.TOCHTERMANN@BROWARDSCHOOLS.COM
   - 7.5. STEPHAN RAMOUTAR (954) 847-2671 SRAMOUTAR@BROWARD.ORG

   THIS MEETING TO DETERMINE ALL BUS ROUTES AND MAKE ANY NECESSARY ARRANGEMENTS FOR REROUTING. THIS MEETING SHALL INCLUDE SPECIAL PROJECTS COORDINATOR FROM BROWARD COUNTY TRAFFIC ENGINEERING DIVISION AND THE CITY OF HALLANDALE BEACH.
8. THE CONTRACTOR IS RESPONSIBLE FOR PROVIDING A SAFE AND ADEQUATE WALKING SURFACE FOR ALL SCHOOL CHILDREN/PEDESTRIANS. THE SAFE WALK ROUTE SHALL BE PART OF THE MAINTENANCE OF TRAFFIC PLAN. THE CONTRACTOR IS RESPONSIBLE FOR OBTAINING AN APPROVED MAINTENANCE OF TRAFFIC PLAN (MOT), INCLUDING THE ABOVE SCHOOL/PEDESTRIAN CONDITIONS, THROUGH BROWARD COUNTY. THE CONDITIONS OUTLINED IN THE MOT ARE IN FORCED AND FULLY EFFECTIVE AS PART OF THE PROPOSED IMPROVEMENTS. THE CONTRACTOR SHALL BE RESPONSIBLE FOR ENSURING THAT ALL WORK ASSOCIATED WITH THIS PROJECT IS IN COMPLIANCE WITH ALL THE REQUIREMENTS OF THE APPROVED MOT, INCLUDING THE ABOVE SCHOOL/PEDESTRIAN CONDITIONS.
9. THE CONTRACTOR SHALL ENSURE THAT THERE ARE NO SPEED LIMIT SIGNS INSTALLED WITHIN THE DESIGNATED REDUCED SCHOOL ZONE, AT ANY TIME THROUGHOUT THE PROJECT.

The Contractor shall verify and be responsible for all dimensions. DO NOT scale the drawing - any errors or omissions shall be reported to Stantec without delay.
The Copyrights to all designs and drawings are the property of Stantec. Reproduction or use for any purpose other than that authorized by Stantec is forbidden.

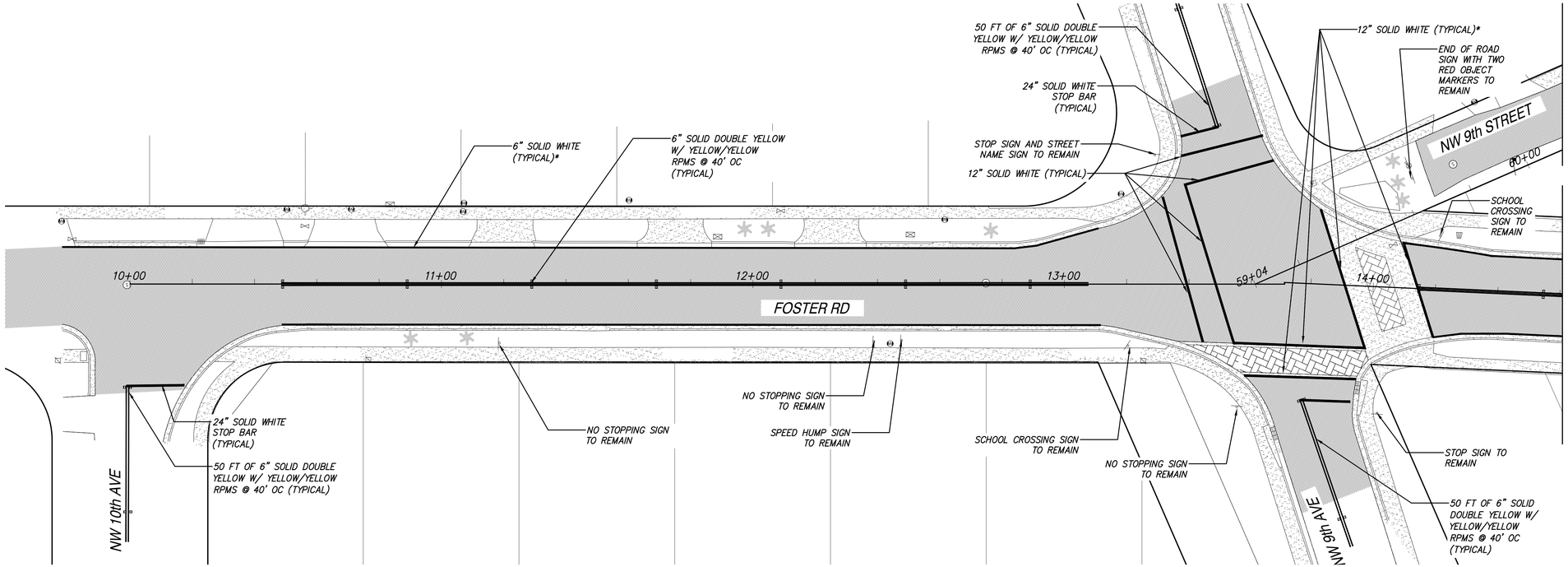

Scale: 1" = 20'
Reduced Scale: 1" = 40'
0' 20' 40'

NOTES:

1. STOP BARS SHALL BE A MINIMUM OF 4'-0" BACK FROM CROSSWALKS OR CURB RAMPS.

*THESE TRAFFIC CONTROL DEVICES AND PAVEMENT MARKINGS ARE MAINTAINED BY THE CITY OF HALLANDALE BEACH.

ALL OTHER DEVICES AND PAVEMENT MARKINGS ARE MAINTAINED BY BROWARD COUNTY TRAFFIC ENGINEERING DEPARTMENT

BCTED# 191106060

Revision	By	Appd.	YY.MM.DD

Issued	By	Appd.	YY.MM.DD

Seal

DAVE CLARKE, P.E.
State of Florida - License No. 66553

Consultants

Stantec
901 Ponce de Leon Blvd. Suite 900
Coral Gables, Florida 33134
www.stantec.com

The Contractor shall verify and be responsible for all dimensions. DO NOT scale the drawing - any errors or omissions shall be reported to Stantec without delay.
The Copyrights to all designs and drawings are the property of Stantec. Reproduction or use for any purpose other than that authorized by Stantec is forbidden.

CITY OF HALLANDALE BEACH
12" WATER MAIN ALONG FOSTER RD
CITY OF HALLANDALE BEACH, FLORIDA

File Name:	ER	DC	LF	19.07.31
	Dwn.	Chkd.	Dsgn.	YY.MM.DD

PAVEMENT MARKING

Project No.	Scale	
177311197	AS NOTED	
Drawing No.	Sheet	Revision
	C-23	

V:\1773\active\177311197\drawings\civil\177311197_marking.dwg
2020/02/07 4:40 PM By: Robaina, Eduardo

FOR CONTINUATION SEE SHEET C-26

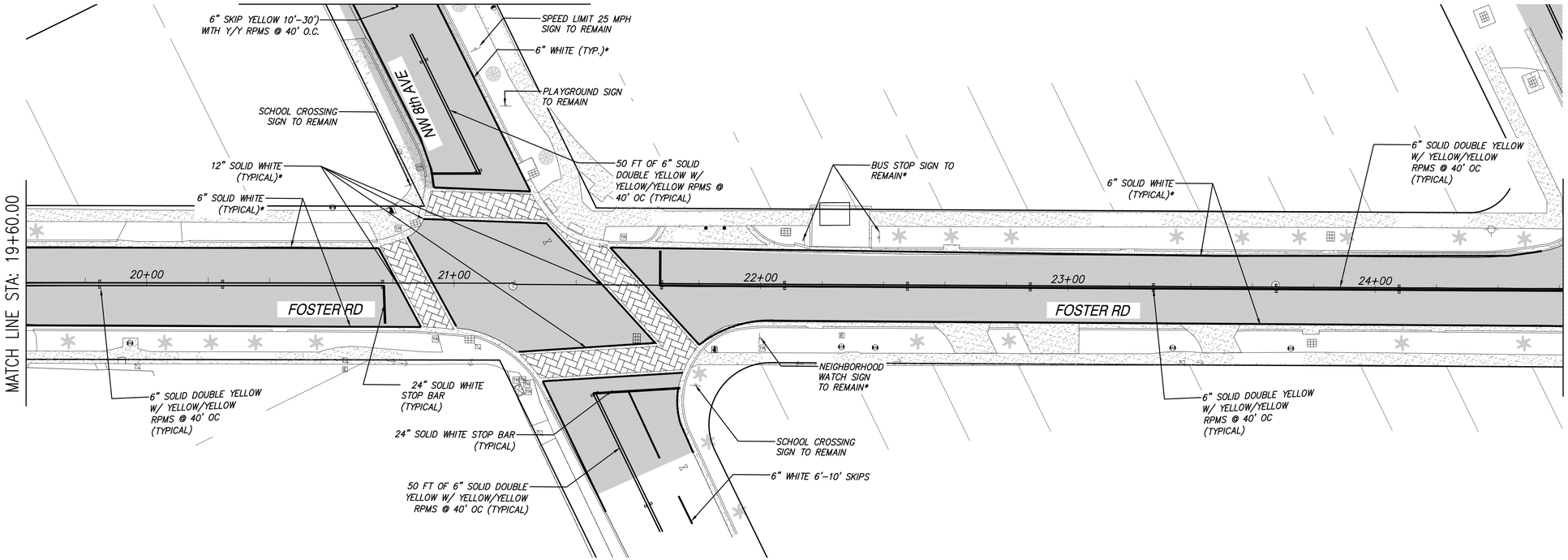

Scale: 1" = 20'
Reduced Scale: 1" = 40'
0' 20' 40'

NOTES:

1. STOP BARS SHALL BE A MINIMUM OF 4'-0" BACK FROM CROSSWALKS OR CURB RAMPS.

*THESE TRAFFIC CONTROL DEVICES AND PAVEMENT MARKINGS ARE MAINTAINED BY THE CITY OF HALLANDALE BEACH.

ALL OTHER DEVICES AND PAVEMENT MARKINGS ARE MAINTAINED BY BROWARD COUNTY TRAFFIC ENGINEERING DEPARTMENT

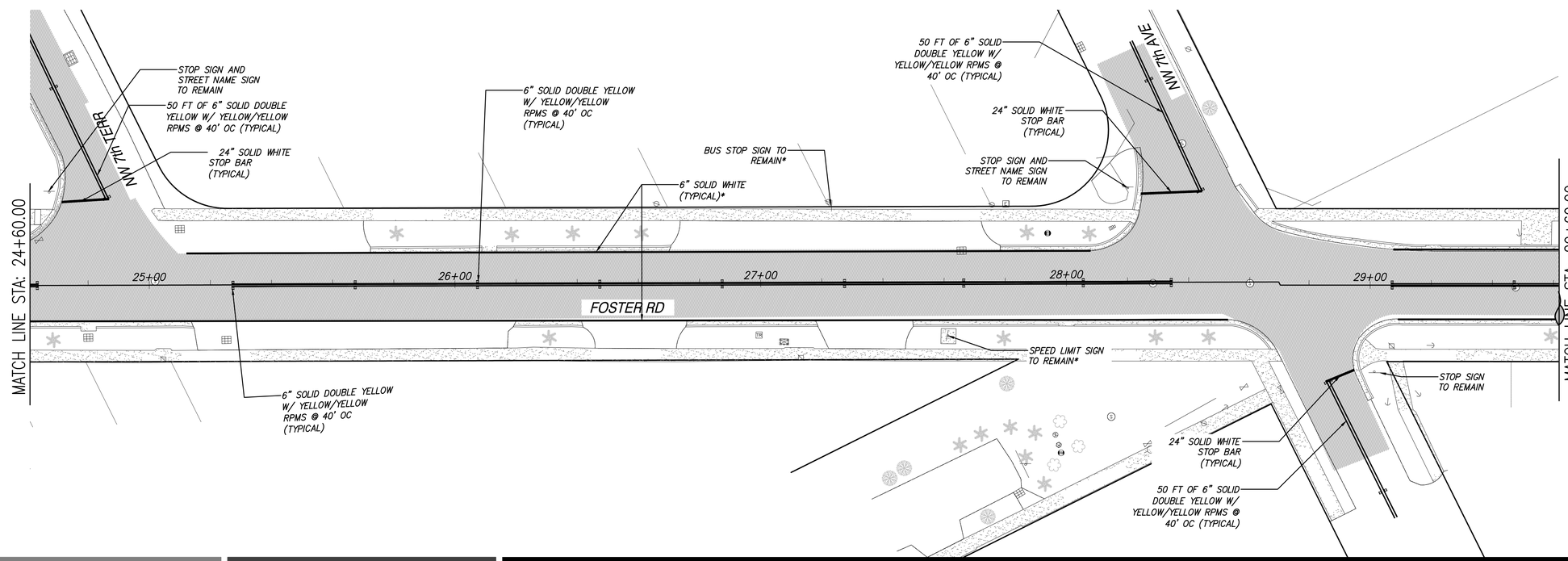

BCTED# 191106060

Revision	By	Appd.	YY.MM.DD

Issued	By	Appd.	YY.MM.DD

Seal

DAVE CLARKE, P.E.
State of Florida - License No. 66553

Consultants

Stantec
901 Ponce de Leon Blvd. Suite 900
Coral Gables, Florida 33134
www.stantec.com

The Contractor shall verify and be responsible for all dimensions. DO NOT scale the drawing - any errors or omissions shall be reported to Stantec without delay.
The Copyrights to all designs and drawings are the property of Stantec. Reproduction or use for any purpose other than that authorized by Stantec is forbidden.

CITY OF HALLANDALE BEACH
12" WATER MAIN ALONG FOSTER RD
CITY OF HALLANDALE BEACH, FLORIDA

File Name:	ER	DC	LF	19.07.31
	Dwn.	Chkd.	Dsgn.	YY.MM.DD

PAVEMENT MARKING

Project No.	Scale	
177311197	AS NOTED	
Drawing No.	Sheet	Revision
	C-24	

V:\1773\active\177311197\drawings\civil\177311197_marking.dwg
2020/02/07 4:42 PM By: Robalino, Eduardo

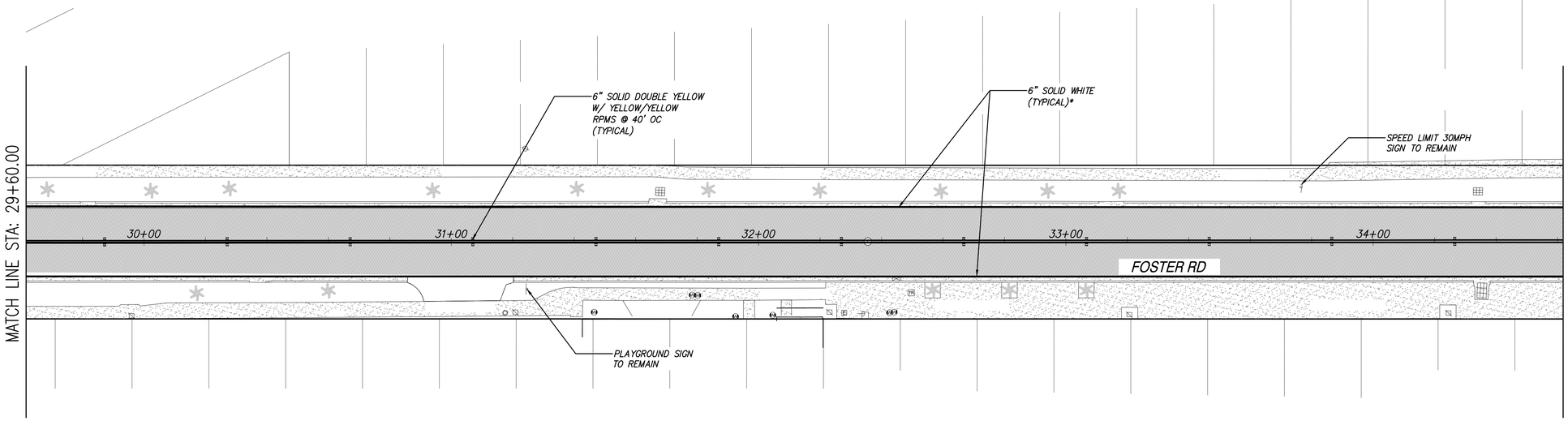

Scale: 1" = 20'
Reduced Scale: 1" = 40'
0' 20' 40'

NOTES:

1. STOP BARS SHALL BE A MINIMUM OF 4'-0" BACK FROM CROSSWALKS OR CURB RAMPS.

*THESE TRAFFIC CONTROL DEVICES AND PAVEMENT MARKINGS ARE MAINTAINED BY THE CITY OF HALLANDALE BEACH.

ALL OTHER DEVICES AND PAVEMENT MARKINGS ARE MAINTAINED BY BROWARD COUNTY TRAFFIC ENGINEERING DEPARTMENT

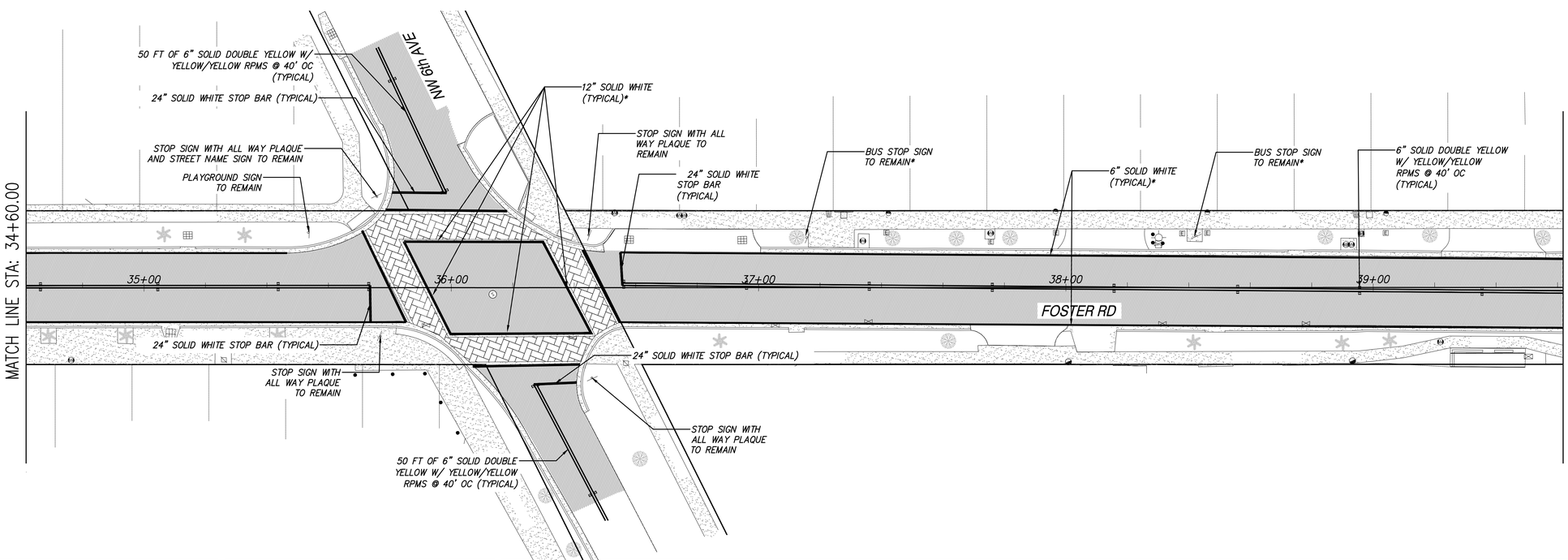

BCTED# 191106060

Revision	By	Appd.	YY.MM.DD

Issued	By	Appd.	YY.MM.DD

Seal

DAVE CLARKE, P.E.
State of Florida - License No. 66553

Consultants

Stantec
901 Ponce de Leon Blvd. Suite 900
Coral Gables, Florida 33134
www.stantec.com

The Contractor shall verify and be responsible for all dimensions. DO NOT scale the drawing - any errors or omissions shall be reported to Stantec without delay.
The Copyrights to all designs and drawings are the property of Stantec. Reproduction or use for any purpose other than that authorized by Stantec is forbidden.

CITY OF HALLANDALE BEACH
12" WATER MAIN ALONG FOSTER RD
CITY OF HALLANDALE BEACH, FLORIDA

File Name:	ER	DC	LF	19.07.31
	Dwn.	Chkd.	Dsgn.	YY.MM.DD

PAVEMENT MARKING

Project No.	Scale	
177311197	AS NOTED	
Drawing No.	Sheet	Revision
	C-25	

V:\1773\active\177311197\drawings\civil\177311197_marking.dwg
2020/02/07 4:44 PM By: Robalino, Eduardo

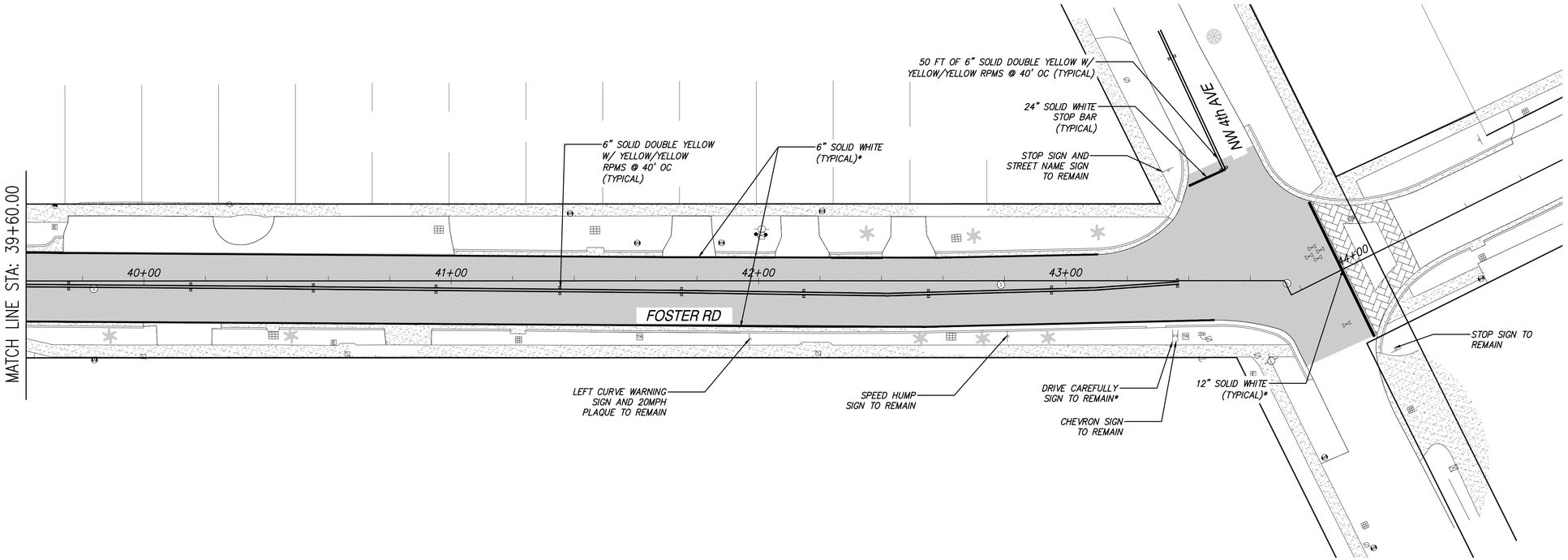

Scale: 1" = 20'
Reduced Scale: 1" = 40'
0' 20' 40'

NOTES:
1. STOP BARS SHALL BE A MINIMUM OF 4'-0" BACK FROM CROSSWALKS OR CURB RAMPS.

*THESE TRAFFIC CONTROL DEVICES AND PAVEMENT MARKINGS ARE MAINTAINED BY THE CITY OF HALLANDALE BEACH.

ALL OTHER DEVICES AND PAVEMENT MARKINGS ARE MAINTAINED BY BROWARD COUNTY TRAFFIC ENGINEERING DEPARTMENT

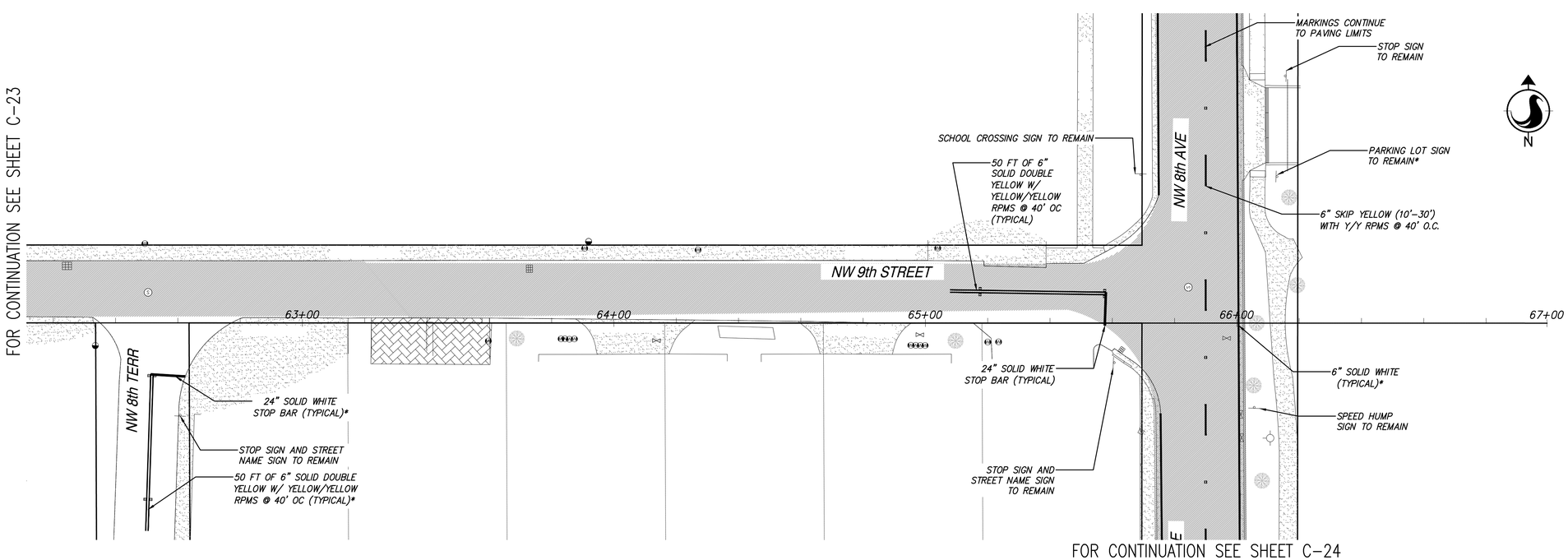

FOR CONTINUATION SEE SHEET C-24

BCTED# 191106060

Revision	By	Appd.	YY.MM.DD

Issued	By	Appd.	YY.MM.DD

Seal

DAVE CLARKE, P.E.
State of Florida - License No. 66553

Consultants

Stantec
901 Ponce de Leon Blvd. Suite 900
Coral Gables, Florida 33134
www.stantec.com

The Contractor shall verify and be responsible for all dimensions. DO NOT scale the drawing - any errors or omissions shall be reported to Stantec without delay.
The Copyrights to all designs and drawings are the property of Stantec. Reproduction or use for any purpose other than that authorized by Stantec is forbidden.

CITY OF HALLANDALE BEACH
12" WATER MAIN ALONG FOSTER RD
CITY OF HALLANDALE BEACH, FLORIDA

File Name:	ER	DC	LF	19.07.31
	Dwn.	Chkd.	Dsgn.	YY.MM.DD

PAVEMENT MARKING

Project No.	Scale	
177311197	AS NOTED	
Drawing No.	Sheet	Revision
	C-26	

V:\1773\active\177311197\drawings\civil\177311197_marking.dwg
2020/02/07 4:46 PM By: Robalina, Eduardo

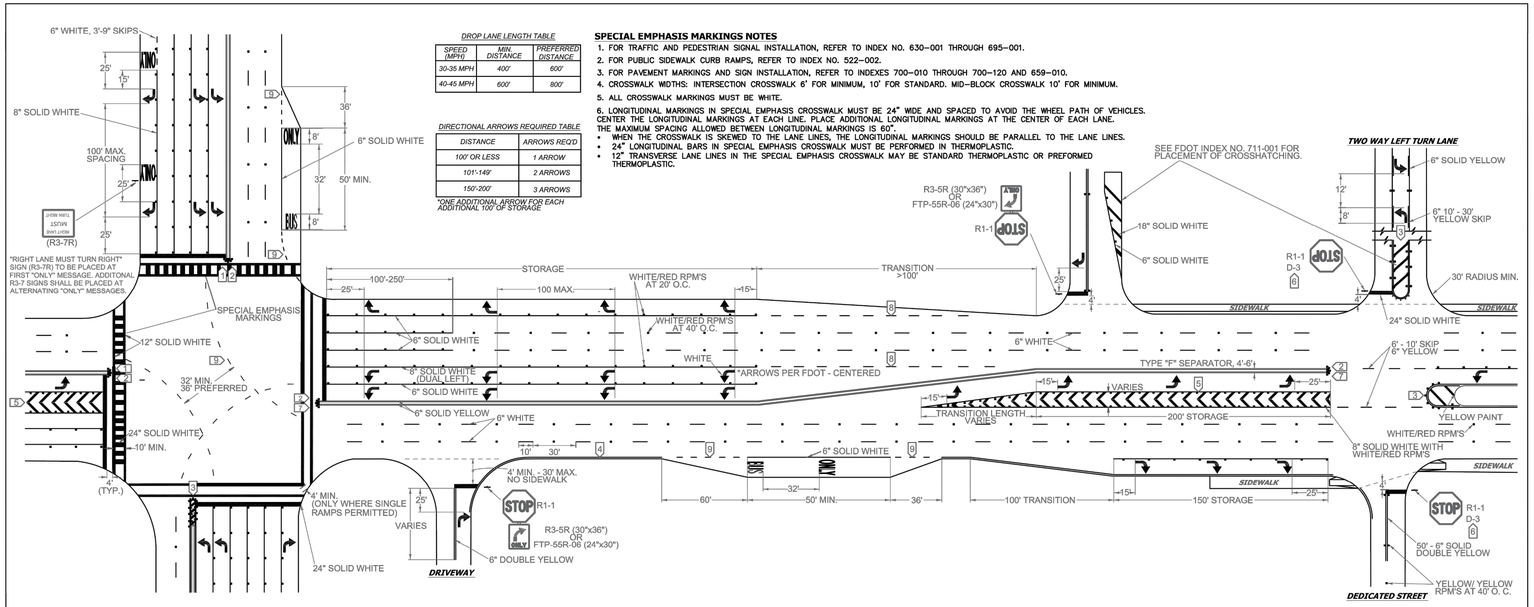

DROP LANE LENGTH TABLE

SPEED (MPH)	MIN. DISTANCE	PREFERRED DISTANCE
30-35 MPH	400'	600'
40-45 MPH	600'	800'

DIRECTIONAL ARROWS REQUIRED TABLE

DISTANCE	ARROWS REQ'D
100' OR LESS	1 ARROW
101'-149'	2 ARROWS
150'-200'	3 ARROWS

*ONE ADDITIONAL ARROW FOR EACH ADDITIONAL 100' OF STORAGE

SPECIAL EMPHASIS MARKINGS NOTES

1. FOR TRAFFIC AND PEDESTRIAN SIGNAL INSTALLATION, REFER TO INDEX NO. 630-001 THROUGH 695-001.
2. FOR PUBLIC SIDEWALK CURB RAMPS, REFER TO INDEX NO. 522-002.
3. FOR PAVEMENT MARKINGS AND SIGN INSTALLATION, REFER TO INDEXES 700-010 THROUGH 700-120 AND 659-010.
4. CROSSWALK WIDTHS: INTERSECTION CROSSWALK 6' FOR MINIMUM, 10' FOR STANDARD. MID-BLOCK CROSSWALK 10' FOR MINIMUM.
5. ALL CROSSWALK MARKINGS MUST BE WHITE.
6. LONGITUDINAL MARKINGS IN SPECIAL EMPHASIS CROSSWALK MUST BE 24" WIDE AND SPACED TO AVOID THE WHEEL PATH OF VEHICLES. CENTER THE LONGITUDINAL MARKINGS AT EACH LINE. PLACE ADDITIONAL LONGITUDINAL MARKINGS AT THE CENTER OF EACH LANE. THE MAXIMUM SPACING ALLOWED BETWEEN LONGITUDINAL MARKINGS IS 60".
   - WHEN THE CROSSWALK IS SKEWED TO THE LANE LINES, THE LONGITUDINAL MARKINGS SHOULD BE PARALLEL TO THE LANE LINES.
   - 24" LONGITUDINAL BARS IN SPECIAL EMPHASIS CROSSWALK MUST BE PERFORMED IN THERMOPLASTIC.
   - 12" TRANSVERSE LANE LINES IN THE SPECIAL EMPHASIS CROSSWALK MAY BE STANDARD THERMOPLASTIC OR PREFORMED THERMOPLASTIC.

NOTES

1. ALL PAVEMENT MARKINGS SHALL BE ALKYD BASED THERMOPLASTIC AND FULLY RETROREFLECTORIZED.
2. ALL PAVEMENT MARKINGS ON PAVER SYSTEMS SHALL BE 3M 380/381 SERIES TAPE OR EQUIVALENT AND APPLIED WITH P60 ADHESIVE AS PER MANUFACTURERS SPECIFICATIONS.
3. ALL PAVEMENT MARKINGS AND SIGNING SHALL BE IN ACCORDANCE WITH THE "MANUAL ON UNIFORM TRAFFIC CONTROL DEVICES", BCTED STANDARDS, AND FDOT DESIGN STANDARDS.
4. SEE FDOT INDEX NO 706-001 FOR PLACEMENT OF RPM's (FOR BULLNOSE RPM TREATMENT, SEE LEGEND NO. 1)
5. RPM's SHALL BE CLASS "B" OR EQUIVALENT, APPLIED WITH EPOXY OR BITUMINOUS ADHESIVE.
6. FDOT APPROVED SEALER SHALL BE USED WHEN APPLYING MARKINGS ON CONCRETE.
7. FOR BIKE LANE DETAILS SEE FDOT INDEX NO. 711-002.
8. MARKINGS IN AND ADJACENT TO BIKE LANES SHALL BE THERMOPLASTIC WITH A MIXTURE OF 50% GLASS SPHERES AND 50% SHARP SILICA SAND APPLIED AT A RATE DETERMINED BY THE MANUFACTURER'S SPECIFICATIONS.
9. EXISTING MARKINGS SHALL BE REMOVED BY WATER BLASTING OR SAND BLASTING.
10. ALL STOP LINES TO BE 4' BEHIND CROSSWALK OR SIDEWALK.
11. PAVEMENT MARKING REFLECTIVITY SHALL BE UNIFORM ACROSS THE ENTIRE STRIPE AND SHALL HAVE A MINIMUM REFLECTIVITY READING OF 250 MILLICANDELAS FOR WHITE AND 175 MILLICANDELAS FOR YELLOW.
12. ALL PRODUCTS MUST BE ON FDOT'S APPROVED PRODUCTS LIST (APL).
13. RPMS SHALL NOT BE INSTALLED ADJACENT TO BIKE LANES.

LEGEND

1 YELLOW/YELLOW RPM DETAILS

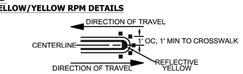

2 MEDIAN NOSE PAINT DETAILS

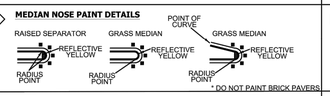

3 PAINTED MEDIAN DETAILS

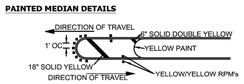

4 EDGE LINE DETAILS

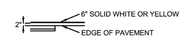

5 CHEVRON DETAILS - CROSSWALK AREAS AND IN FRONT OF CURB RAMPS

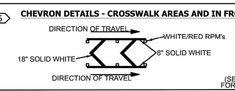

(SEE FDOT INDEX NO. 17346 FOR SPACING OF CHEVRONS)

6 STREET NAME BLADE DETAILS

SEE BCTED STOP SIGN AND STREET IDENTIFICATION ASSEMBLY TYPICAL DETAILS.

7 TYPE IV SEPARATOR DETIALS

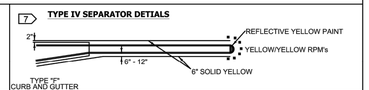

8 6'-10' SKIP DETAILS

6' - 10' SKIPS 6" WHITE SHALL BE USED FOR THE FOLLOWING CONDITIONS:

- HORIZONTAL CURVE SECTIONS
- CHANGES IN HORIZONTAL ALIGNMENT
- TRANSITIONS GREATER THAN 100'

9 2'-4' SKIP DETAILS

2' - 4' SKIPS 6" WHITE SHALL BE USED FOR THE FOLLOWING CONDITIONS:

- RADIUS GUIDE LINES BETWEEN DUAL LEFTS TURN MOVEMENT (90' RADIUS PREFERRED OR AS NOTED ON PLANS)
- BUS BAY TRANSITIONS

STOP SIGN NOTE

WHERE SIDE ROADS INTERSECT A MULTI LANE STREET OR HIGHWAY THAT HAS A SPEED LIMIT OF 45 MPH OR HIGHER, THE MINIMUM SIZE OF THE STOP SIGNS FACING THE SIDE ROAD APPROACHES, EVEN IS THE SIDE ROAD ONLY HAS ONE APPROACH LANE, SHALL BE 36"X36".

WHERE SIDE ROADS INTERSECT A MULTI-LANE (INCLUDING TURN LANE) STREET OR HIGHWAY THAT HAS A SPEED LIMIT OF 40 MPH OR LOWER, THE MINIMUM SIZE OF THE STOP SIGN FACING THE SIDE ROAD APPROACHES SHALL BE 36"X36".

REVISIONS

DATE	DESCRIPTION
01-15-2016	N/A
06-11-2018	UPDATED FDOT INDEX REFERENCE
08-23-2018	UPDATED NOTES

BROWARD COUNTY FLORIDA

PUBLIC WORKS DEPARTMENT
TRAFFIC ENGINEERING DIVISION

DESIGN BY: CARMELO CARATOZZOLO, P.E. | SCALE: NTS
DRAWN BY: STEPHON RAMOUTAR
CHECKED BY: ANDREW SEBO, P.E., PTOE

PAVEMENT MARKINGS AND SIGNS DETAILS

SHEET NO. 1 OF 1

NOTES:

1. THE CONTRACTOR TO RESTORE, INCLUDING BUT NOT LIMITED TO, ALL DISTURBED ASPHALT PAVEMENT, PAVEMENT MARKINGS AND RPM, STREET SIGNS, SOD, LANDSCAPE, IRRIGATION, CURB, CURB & GUTTER, GUARD RAILS, FENCES, PAVER BRICKS, SIDEWALKS, MAIL BOXES, ANY DISTURBED UNDERGROUND OR ABOVE GROUND UTILITIES.
2. THE DETECTABLE WARNING SURFACE FOR CURB RAMPS SHALL BE CAST IN PLACE (FDOT STANDARD INDEX # 304).
3. ANY PAVEMENT MARKING OR SIGNS DAMAGED DURING CONSTRUCTION SHALL BE RESTORED ACCORDING TO BROWARD COUNTY TRAFFIC ENGINEERING STANDARDS.
4. ALL EXISTING SIGNS ARE TO REMAIN.
5. EXISTING PAVEMENT MARKING SHALL BE REMOVED BY SAND-BLASTING OR OTHER WATER BLASTING METHODS.
6. ALL STOP BARS TO BE 4' BEHIND CROSSWALK OR CURB RAMP. (TYPICAL)
7. INSTALL BLUE RPMS TO EVERY FIRE HYDRANT INSTALLATION AS PER STANDARDS

BCTED# 191106060

Revision	By	Appd.	YY.MM.DD

Issued	By	Appd.	YY.MM.DD

Seal

DAVE CLARKE, P.E.
State of Florida - License No. 66553

Consultants

Stantec
901 Ponce de Leon Blvd. Suite 900
Coral Gables, Florida 33134
www.stantec.com

The Contractor shall verify and be responsible for all dimensions. DO NOT scale the drawing - any errors or omissions shall be reported to Stantec without delay.
The Copyrights to all designs and drawings are the property of Stantec. Reproduction or use for any purpose other than that authorized by Stantec is forbidden.

CITY OF HALLANDALE BEACH
12" WATER MAIN ALONG FOSTER RD
CITY OF HALLANDALE BEACH, FLORIDA

File Name:	ER	DC	LF	19.07.31
	Dwn.	Chkd.	Dsgn.	YY.MM.DD

PAVEMENT MARKING NOTES AND DETAILS

Project No.	Scale	
177311197	AS NOTED	
Drawing No.	Sheet	Revision
	C-27	

Y:\1773\active\177311197\drawings\civil\177311197_marking.dwg
2020/02/07 4:46 PM By: Robaina, Eduardo

GUIDE TO USE THIS STANDARD:

1. Calculate the Total Panel Area and the centroid 'C' for an individual sign or a sign cluster.
2. Determine the height 'H' from the groundline for the individual sign or the cluster.
3. Consult the Post Size Table and find the intersection point.
4. Design the post and the foundation according to the required Post Size and Assembly Details.

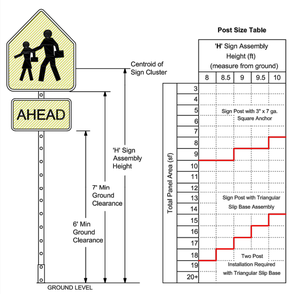

Post Size Table

Total Panel Area (sf)	'H' Sign Assembly Height (ft) (measure from ground) 8	8.5	9	9.5	10
3					
4					
5	Sign Post with 3" x 7 ga. Square Anchor				
6					
7					
8					
9					
10					
11					
12					
13	Sign Post with Triangular Slip Base Assembly				
14					
15					
16					
17					
18	Two Post Installation Required with Triangular Slip Base				
19					
20+					

Sign Post with 3" x 7 ga. Square Anchor

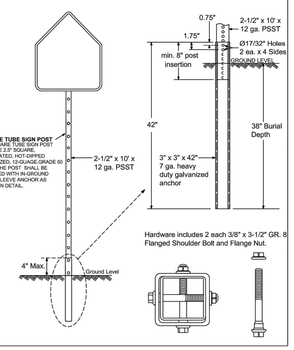

Sign Post with Triangular Slip Base

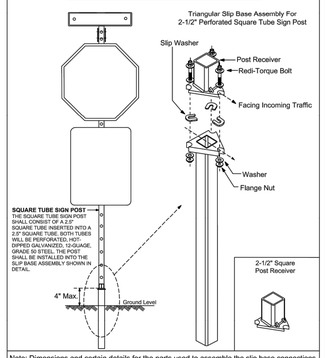

Note: Dimensions and certain details for the parts used to assemble the slip base connections are intentionally not shown. Slip base connections are patented manufactured products that are in compliance with NCHRP 350 crash test criteria. The base connection details are only shown on this plan to illustrate how the parts are assembled. The complete assembly must be designed to withstand 150 mph Base Wind Speed per 2013 AASHTO Standard Specifications for Structural Supports for Highway Signs, Luminaires, and Traffic Signals, 6th edition and interims.

REVISIONS			
DATE	DESCRIPTION		
01-05-2016	N/A		
03-21-2017	UPDATED POST SIZE		

BROWARD COUNTY FLORIDA

PUBLIC WORKS DEPARTMENT
TRAFFIC ENGINEERING DIVISION

DESIGN BY: YVES D'ANJOU, P.E. | SCALE: NTS
DRAWN BY: STEPHON RAMOUTAR
CHECKED BY: ANDREW SEBO, P.E., PTOE

GROUND SIGN ASSEMBLY DETAILS

SHEET NO. 1 OF 1

FOR SIGN ASSEMBLIES WITH MAXIMUM 8.75 SQUARE FOOT PANEL AREA

FOR SIGN ASSEMBLIES WITH GREATER THAN 8.75 SQUARE FOOT PANEL AREA WITH SUPPLEMENTAL SIGN

Typical Details

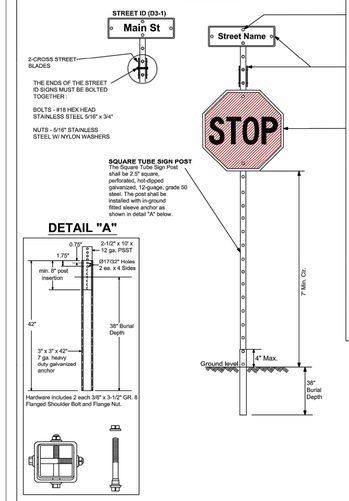

DETAIL "A"

STREET ID (D3-1) MATERIALS:

LETTERS
WHITE TYPE XI SHEETING
LETTERING OF STREET NAME SIGNS SHALL BE COMPOSED OF A COMBINATION OF LOWERCASE LETTERS WITH INITIAL UPPERCASE LETTERS

BORDER
BORDER WIDTHS WILL VARY BASED ON LETTER HEIGHTS

LETTER HEIGHTS - BORDER WIDTHS
4 INCH LETTER = 0.375 INCH BORDER WIDTH
6 INCH LETTER = 0.500 INCH BORDER WIDTH
8 INCH LETTER = 0.750 INCH BORDER WIDTH

GREEN BACKGROUND
GREEN TRANSLUCENT INK SILK-SCREENED CLEAR-COATED OR ELECTRO-CUT (EC) FILM OR EQUIVALENT

LETTER SIZES
SEE MUTCD TABLE 2D-2 (PG 163)
FOR MINIMUM LETTER HEIGHTS
LENGTH VARIES BY STREET NAME

HARDWARE
BOLTS - #18 HEX HEAD STAINLESS STEEL 5/16" x 3"
NUTS - 5/16" STAINLESS STEEL W/ NYLON WASHERS.

REGULATORY SIGN
WHEN NO STREET ID IS PRESENT
THE STOP SIGN SHALL BE MOUNTED FLUSH TO THE TOP OF THE POST WHILE MAINTAINING 7 FEET MIN. CLEARANCE BETWEEN BOTTOM OF SIGN AND GROUND LEVEL. ANY SIGN INSTALLED BACK TO BACK WITH THE STOP SIGN SHALL BE SMALLER THAN THE STOP SIGN.

STOP, DO NOT ENTER OR YIELD
WHITE TYPE XI SHEETING
PRESSURE-SENSITIVE RED TRANSLUCENT INK SILK-SCREENED CLEAR-COATED OR ELECTRO-CUT (EC) FILM OR EQUIVALENT.

HARDWARE
BOLTS - #18 HEX HEAD STAINLESS STEEL 5/16" x 3"
NUTS - 5/16" STAINLESS STEEL W/ NYLON WASHERS.

NOTES: 1. ALL TYPE XI SHEETING UTILIZED MUST BE ON THE FDOT APL LIST.

2. SEE BCTED TECHNICAL POLICY MEMO #TPM - 16-001 - SPECIFICATIONS FOR RETROFLECTIVE TRAFFIC SIGN MATERIALS.

Typical Details

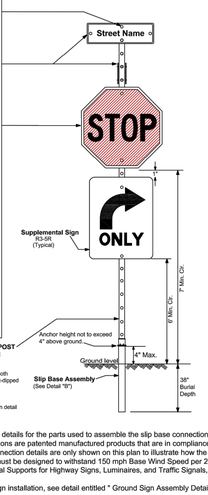

SQUARE TUBE SIGN POST
The Square Tube Sign Post shall consist of a 2.5" square tube inserted into a 2.5" square post receiver. Both tubes will be perforated, hot-dipped galvanized, 12-gauge, grade 50 steel. The post shall be installed into the slip base assembly shown in detail "B".

DETAIL "B"

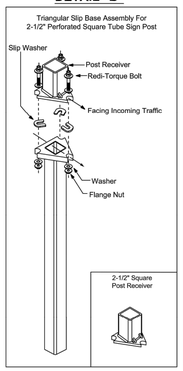

Notes:

1. Dimensions and certain details for the parts used to assemble the slip base connections are intentionally not shown. Slip base connections are patented manufactured products that are in compliance with NCHRP 350 crash test criteria. The base connection details are only shown on this plan to illustrate how the parts are assembled. The complete assembly must be designed to withstand 150 mph Base Wind Speed per 2013 AASHTO Standard Specifications for Structural Supports for Highway Signs, Luminaires, and Traffic Signals, 6th edition and interims.

2. For standard ground sign installation, see detail entitled " Ground Sign Assembly Details".

REVISIONS			
DATE	DESCRIPTION		
08-08-2017	N/A		
01-25-2018	N/A		
04-09-2019	UPDATED MATERIAL NOTES		

BROWARD COUNTY FLORIDA

PUBLIC WORKS DEPARTMENT
TRAFFIC ENGINEERING DIVISION

DESIGN BY: CARMELO CARATOZZOLO, P.E. | SCALE: NTS
DRAWN BY: STEPHON RAMOUTAR
CHECKED BY: ANDREW SEBO, P.E., PTOE

STOP SIGN AND STREET IDENTIFICATION ASSEMBLY TYPICAL DETAILS

SHEET NO. 1 OF 1

BCTED# 191106060

Revision	By	Appd.	YY.MM.DD

Issued	By	Appd.	YY.MM.DD

Seal

DAVE CLARKE, P.E.
State of Florida - License No. 66553

Consultants

Stantec
901 Ponce de Leon Blvd. Suite 900
Coral Gables, Florida 33134
www.stantec.com

The Contractor shall verify and be responsible for all dimensions. DO NOT scale the drawing - any errors or omissions shall be reported to Stantec without delay.
The Copyrights to all designs and drawings are the property of Stantec. Reproduction or use for any purpose other than that authorized by Stantec is forbidden.

CITY OF HALLANDALE BEACH
12" WATER MAIN ALONG FOSTER RD
CITY OF HALLANDALE BEACH, FLORIDA

File Name:	ER	DC	LF	19.07.31
	Dwn.	Chkd.	Dsgn.	YY.MM.DD

PAVEMENT MARKING NOTES AND DETAILS 2

Project No.	Scale	
177311197	AS NOTED	
Drawing No.	Sheet	Revision
	C-28	

V:\1773\active\177311197\drawings\civil\177311197_marking.dwg
2020/02/07 4:46 PM By: Robaina, Eduardo